Design and Construction Standards

January 2023

Section	Title	Revision Summary
1	Introduction	Paragraph E.2.h. – language has been added as follows: h. <u>Attachment A</u> to this section includes a listing of minimum required sections / chapters for a PER. The desired outcome of this effort is to facilitate focused reviews of these chapters by specific individuals and stakeholders within HRSD.
2	Architectural and Landscaping Design and Review Process	Attachment A - An updated version of the HRSD Facilities Architectural Guidelines is incorporated for this publication.
4	Monthly Project Status Reporting	Exhibit A – Clarification language has been incorporated for "Work Completed by FIRM this reporting period" and direction for the FIRM not to repeat past status items in previously submitted Progress Reports.
5	Capital Project Cost, Schedule, and Risk Reporting	This section has been modified significantly and warrants a careful review. Included in the modification are movement of previous exhibits into attachments and creation of two new attachments for project schedule and project budget requirements.
6	Drawings, Record Drawings and Valve Guides	Paragraph B.5.f. – language has been added as follows: Proposed Valve Guide locations should also be shown in this single AutoCAD file; the proposed Valve Guide locations should be represented as squares/rectangles in their true coordinate location, estimating the extent of the areas to be represented by the Valve Guide. This AutoCAD file will serve as an early coordination tool to determine eventual line number(s) and Valve Guide number(s).

Section	Title	Revision Summary
8	PER, Design, and Construction Submittal Requirements	Paragraph B.10 - language has been added as follows: 10. Soil Resistivity / Corrosivity Analyses, when performed to support project design, must be submitted in accordance with the following requirements: a. One (1) PDF file of each soil resistivity / corrosivity report, separate from the Conformed Specifications package, uploaded to Unifier. b. HRSD standard soil data spreadsheet (1) populated with analysis and result values A blank template is available by request from the GIS/CAD Division. Key required attributes include i. Date of field measurement or soil sample collection ii. Name of soil corrosivity analysis firm iii. Soil sample and field resistivity measurement locations as Virginia State Plane coordinates to an accuracy of ± 5 ft. iv. Various soil resistivity and chemistry attributes.
8	PER, Design, and Construction Submittal Requirements	Attachment C has been added to this section as an Excel template for capturing soil data as referenced in Section 8.

Section	Title	Revision Summary
9	Real Estate Acquisition and Plat Guidelines	New paragraphs D through G have been incorporated along with Attachments C through G into this section. A. <u>Design Engineer's Estimate</u> – when requested, the FIRM shall produce a replacement cost estimate to be used in procuring a title insurance policy for a parcel and structure. • Attachment C – Sample – Engineer's Estimate B. <u>Justification Memorandum</u> – when requested, the FIRM shall produce a justification memorandum to support the acquisition cost for a property or easement. The justification memorandum should consider, at a minimum, the impact of the acquisition or easement(s) on design, permitting, maintenance of traffic, construction costs, project schedule and regulatory deadlines, community, and social justice, as well as the impacts to the property owner. The memorandum should include the FIRM's recommendation statement. • Attachment D – Sample - Design Consultant • Attachment E– Sample - Real Estate Consultant C. <u>Phase 1, Environmental Site Assessment (ESA)</u> - for each fee simple acquisition, the FIRM shall prepare a Phase 1, ESA. This requirement can only be waived by the Director of Engineering on the recommendation of the Real Estate Manager. • Attachment F – Sample – Phase 1 ESA D. <u>Location Map</u> – when requested, the FIRM shall produce a Location Map for the fee simple or easement acquisition. • Attachment G – Sample – Location Map
10	Flood Elevation Requirements	This section has been modified significantly and warrants a careful review.
11	Public Communication Program	This section and attachments have been modified significantly and warrants a careful review.

Section	Title	Revision Summary
12	Preconstruction Assessment and Damage Mitigation Procedures	Paragraph B. – new requirements have been incorporated related to Stage 1, 2 and 3 as follows: Following HRSD review and acceptance of 50% design development plans and prior to the 90% design development stage, the FIRM will conduct a workshop to discuss the Stage 1 (Construction Impact Research and Evaluation) report and any recommendations for further actions in the preconstruction or construction phases that are detailed in the Stage 2 and Stage 3. Attendees at this workshop will include the HRSD Project Manager, Real Estate Manager, and other key stakeholders within HRSD. Following HRSD review and acceptance of 90% design development plans and prior to the 100% design development stage, the FIRM will conduct a workshop to discuss Stage 2 (Risk Mitigation Analysis and Bid Document Development for Contractor Actions) and Stage 3 (Specific Pre-Construction Field Surveys and Construction Activity Monitoring Programs) if recommended actions are to be incorporated into the Bid Documents for the Contractor to perform, recommended actions are to be performed and/or coordinated by the FIRM during the construction phase, and any other recommended actions to be undertaken by HRSD or a third party to monitor and/or mitigate potential construction related damages to adjacent properties. Attendees at this workshop will include the HRSD Project Manager, Real Estate Manager, and other key stakeholders within HRSD.
12	Preconstruction Assessment and Damage Mitigation Procedures	The following two new Attachments have been incorporated: Attachment H: Sample – Precondition Assessment and Damage Mitigation Report Attachment I: Sample – Precondition Assessment Field Survey Report (excerpts)

Section	Title	Revision Summary
13	Coordination with Virginia Department of Environmental Quality (DEQ)for Certificate to Construct and Certificate to Operate	VDEQ revised the process for contractors to receive tax exemption status for qualifying sanitary sewer projects by now having HRSD as the system owner prepare the documentation and letters regarding tax exemption. HRSD Engineering Contract Specialist are coordinating this process for HRSD projects.
16	Preparation of and format for Conformed Documents	Paragraph B.7. - language has been added as follows: HRSD uses the EJCDC C-520 form for typical Design-Bid-Build project delivery.
17	Tracking of Construction Phase Milestones and Performance Metrics	Attachment A – this table has been updated.
18	Expectations for Construction Administration and Construction Inspection	Paragraph J. Training – a new requirement has been added as follows: Certified Electrical Inspector – Master certification required for all inspector(s) overseeing electrical related work.
20	Condition Assessment Protocol	This section has been modified significantly and warrants a careful review. A new Coupon Data Collection Form is included as Attachment A.
23	VDOT 2011 Work Area Protection Manual (WAPM) Requirements	Attachment A Personal Protective Equipment for Work Zone Operations has been updated.

Section	Title	Revision Summary
24	Pipelines and Appurtenances	The following edits to Paragraph B.1.k. have been incorporated: k. When existing pipe is to be abandoned, consider the need to abandon in place and/or remove if required by the locality or governing authority. For pipe abandoned in place the following shall apply: i. All pipe diameters, ensure all sources of flow have been eliminated and dewater in accordance with local, state or federal guidelines ii. For pipe up to and including 12" diameter, seal ends using a mechanical plug or cap specifically designed for the pipe being abandoned. iii. For pipe greater than 12" diameter, fill pipe with lightweight cellular concrete (flowable fill). Fill shall have a minimum compressive strength of 25 lb/cu ft wet cast density yielding a minimum compressive strength of 70 psi at 28 days. Higher densities may be required by the locality or governing authority.
24	Pipelines and Appurtenances	The following edits to Paragraph C.1.n.v. have been incorporated: v. In the case of existing unrestrained pipe at tie-in locations, on a case-by-case basis the design team shall carefully consider the application of thrust restraint to the unrestrained pipe.
24	Pipelines and Appurtenances	The following language has been deleted from Paragraph E.1.f.i.2): Valves in accordance with Section 4.4.8.1.1 of AWWA C500 will not be allowed.

Section	Title	Revision Summary
25	Checklist for Line Stop Installations	Attachment A – this form has been modified to add the following under the Installation Procedures section: Tag pipe coupon and complete Coupon Data Collection Form

Section	Title	Revision Summary
30	Pump Stations	The following edits to Paragraph C.3. have been incorporated: 3. Pump station shall be designed in accordance with the HRSD HGL Policy. Pump selection shall be based on the following flow and pressure conditions provided by HRSD and general requirements: a. Operating range flows and pressures i. Dry weather minimum ii. Dry weather maximum iii. Wet weather maximum b. Pump stations shall be designed with provisions to accommodate future growth based on development trends. c. Under typical operating conditions for variable speed drives (VFDs), pumps shall be capable of maintaining wet well level or pressure set point without cycling on/off. d. Pumps shall operate within the pump's preferred operating range (POR) in accordance with the HRSD HGL Policy. e. In the case where a bypass pumping system is required, the design and operation of the pumping system, whether portable pumps or portable pumps in conjunction with permanent station pumps, will not exceed pump station design capacity.

Section	Title	Revision Summary
30	Pump Stations	The following edits to Paragraphs C.7 and C.8. have been incorporated: 7. Provide a slope on the pump room floor that will convey seepage from pump packing and drainage from wash down to a sump. Provide Zoeller Model 137D sump pump unless this standard model will not meet the flow or pressure condition and in this case, obtain approval for a deviation from HRSD's Project Manager. 8. Provide a toilet and sink in a separate room within the pump station. Provide a wash basin in the pump station.
30	Pump Stations	The following requirement has been added as Paragraph C.21: 21. Physical Modeling shall be completed on all new or full replacement pump stations and a determination shall be documented in the PER regarding the decision to pursue physical modeling on an existing pump station rehabilitation project.
30	Pump Stations	The following requirement has been added as Paragraph D.10: 10. Underground fuel storage tank replacement should be evaluated at existing stations when the tank age exceeds thirty years and major site work is being performed.
30	Pump Stations	The following requirement has been added as Paragraph H.1.f.ii: ii. Sizing Check Valve: To reduce O&M requirements, the valve shall preferably be sized to match the pump discharge nozzle size. Engineer shall confirm the selected check valve and size are in accordance with the check valve manufacturer's recommendations for use and flow ranges and evaluate impact on pump selection and performance.

Section	Title	Revision Summary
30	Pump Stations	The following requirements have been added as Paragraph I.5.b.iii: iii. Wet well levels to be monitored by means of level sensors or bubbler system. If a bubbler system is used, a differential pressure transmitter should be installed. A bypass manifold around the transmitter and maintenance ports on both the low and high side of the transmitter should be incorporated into the pressure assembly.
30	Pump Stations	The following requirements have been added as Paragraph I.9: 9. Provide a single four-gang lockable 20-amp, 120-volt GFCI outlet outside the station near the wet well for a portable light or other use. The need for permanent lighting in the wet well should be discussed in the preliminary engineering phase.
30	Pump Stations	The following additional language has been added to Paragraph I.12: Refer to the Temporary Pump Enclosure detail in Section 36 - Standard Details, Series 700 in this standards manual for guidance.

30	Pump Stations	The following requirements have been added as Paragraphs I.14 thru I.17: 14. When developing a new or modifying an existing functional description, Engineer shall follow the format of an existing and similar functional description provided by the Project Manager. The draft functional description shall be provided to the HRSD team for review in tracked changes. 15. HRSD's sole source vendor, Emerson, shall be used for the following on new or replacement stations: a. Furnish a new PLC control panel for installation by the General Contractor. General Contractor shall terminate wires at control cabinet and conduct loop checks. b. Configure the existing SCADA software to operate the station remotely. c. Configure the existing data historian, graphics, alarm screens, trend screens and reports on the SCADA system. d. Lead site acceptance test with support from the General Contractor. General Contractor shall be responsible for testing all systems and equipment to be controlled by the PLC control panel ahead of the final site acceptance test. e. Provide information regarding SCADA equipment that has been allocated to the project site. 16. HRSD's preferred vendor shall conduct a Cellular Performance Survey of new property, provide instructions regarding the placement and type of cellular

Section	Title	Revision Summary
		antenna (i.e. unidirectional or omnidirectional), and configure the wireless router and system switch. HRSD Project Manager to coordinate vendor activity through the Electrical and Instrumentation Division. General Contractor shall provide and install antenna and may be responsible for installing router and switch. 17. Engineer to provide details in the contract documents regarding SCADA Antenna Installation and Radio Communication System Grounding. Refer to Section 36 - Standard Details, Series 700 in this standards manual for guidance.
32	Electrical and Instrumentation	This section has been updated extensively and warrants a careful review for new, changed, and deleted requirements.

Section	Title	Revision Summary
33	Information Technology Infrastructure Hardware	Paragraph C. - language has been added as follows: 12. For telco. rooms requiring one or more network equipment racks, such racks shall be the four-post tapped rail type, black in color, measure 84”H x 36”D, and accept standard 19” wide equipment . An example of such a rack would be the Chatsworth Products #15218-703. A minimum 3’ perimeter is required around the rack for access. The rack shall be fastened to the floor using Tapcon® concrete anchors, or equivalent. The equipment rack shall be bonded to the building ground bus bar. 13. For server closets or small server rooms, the equipment cabinet shall be fully enclosed on two sides with lockable doors front and back, black in color, measure 44U x 30”W x 45”D, and utilize a square punched hole rail system capable of accepting standard cage nut hardware kits and standard 19” wide equipment. An example of such a cabinet would be the Eaton Paramount #JW843045. A minimum 3’ perimeter is required around the cabinet for access. Single, standalone, cabinets shall be fastened to the floor using Tapcon® concrete anchors, or equivalent. Two or more cabinets side-by-side can be ganged together if anchoring to the floor is not feasible or practical. The equipment cabinet shall be bonded to the building ground bus bar. 14. Power for either racks or cabinets shall be provided via PDU’s made by the manufacturer of the cabinet, if possible, and neatly and securely integrated within the rack/cabinet.
34	Miscellaneous	Paragraph G.3. - language has been added as follows: d. At all office spaces provide a vision glass in the office entry door unless a door sidelight or a borrowed light (interior window) is provided.

Section	Title	Revision Summary
34	Miscellaneous	Paragraph G.4 – language has been added as follows: 4. Electronic Entry-Access Control a. Entry access control needs at HRSD facilities (at interior doors, exterior doors, site gates, etc.) shall be coordinated with HRSD for the specific requirements of the facility. b. Across HRSD, a certified security vendor/company named CTSI is currently used to purchase and install HRSD's security system equipment for entry access control. The primary method of electronic entry-access control is via employee-assigned ID proximity cards which operate card/badge readers (aka: proximity readers). The model prox reader that HRSD currently uses is HID Corp PN 5365EGP00-N 1001, with an 8- reader controller board that interfaces with their rack-mounted CCURE Security System. HRSD's I.T. services office coordinates electronic access control systems. c. See the typical door access-control diagram at the end of this section.
36	Standard Details	The Series 700: Electrical and Instrumentation Details have been added. These details are listed below: 700 Wet Well Pump Wiring Electrical Backboard Detail 701A/B Antenna Installation Detail 702A/B Intrinsic Safety Panel 703 Temporary Pump Enclosure Detail 704 Actuator Vault Electrical Backboard Detail 705 Instrument Vault Electrical Plan 706 Actuator Vault Electrical Plan 707A/B Wet Well Instrumentation Installation Detail

Section	Title	Revision Summary
38	Front End Documents	Attachment A EJCDC 2018 Documents – this section has been updated and warrants a careful review. Two noteworthy changes in the Supplementary Conditions (C-800) appear below: *4.04 Progress Schedule* SC-4.04 Add new subparagraphs immediately after Paragraph 4.04.A.1: a. Contractor shall prepare and provide to Engineer a 4-week look ahead schedule for discussion at each monthly construction progress meeting. b. Contractor shall update and recalculate every 90 calendar days the master construction schedule that will be submitted to the Engineer for discussion at the next upcoming monthly construction progress meeting. SC-7.17 Add new paragraph immediately after Paragraph 7.17.E: F. *Standard of Care:* All Work performed pursuant to the Contract Documents shall be consistent with the Contractor's highest and best work, which shall be at least as good as the standard of care, skill, attention, priority, and judgement provided by first class, experienced Contractors in the greater Hampton Roads area (the "Standard of Care"). The Contractor shall supervise and direct the Work in accordance with the Standard of Care.
39	Construction Administration Forms / Formats	Paragraph B.9 has been updated as follows: 9. Application for Payment a. Summary Sheet b. Schedule of Values – Lump Sum c. Schedule of Values – Unit Price d. Stored Materials Inventory e. Diversity Procurement Statement f. Diversity Procurement Statement starting *July 1, 2023* g. WIFIA Requirement Only: HRSD Contractor Progress Report

Section	Title	Revision Summary
40	01060 Special Conditions	Paragraph 1.5.F. – new requirements regarding construction progress schedules are incorporated as follows: h. Updated overall construction schedule to completion (update required every 90-calendar days) for viewing and discussion. i. 4-week look ahead construction schedule updated and discussed each meeting.
40	02510 Ductile Iron Pipe and Fittings	Paragraph 2.2.C. has been edited as follows: C. Saddles for Air Vents: 1. Smith Blair Service Saddle with 2-inch threaded outlet (Mueller CC threads). 2. Smith Blair Models a. Style 366 for pipe 18-inche in diameter and larger b. Style 313 for pipe less than 18-inch diameter 3. JCM Industries a. Style 418 for pipe 24-inches and larger b. Style 404 for pipe less than 24-inch diameter
40	02520 Polyvinyl Chloride Pipe	Paragraph 2.2.D. has been edited as follows: C. Saddles for Air Vents: 1. Smith Blair Service Saddle with 2-inch threaded outlet (Mueller CC threads). 2. Smith Blair Models a. Style 366 for pipe 18-inche in diameter and larger b. Style 313 for pipe less than 18-inch diameter 3. JCM Industries a. Style 418 for pipe 24-inches and larger b. Style 404 for pipe less than 24-inch diameter
40	02610 Valves	Paragraph 2.2.D. has been edited as follows: a. Valves shall conform to AWWA C500. b. Seats in the body shall be replaceable without removing the valve from the pipeline. c. Discs shall be cast or ductile iron and bronze faced. d. Discs may be free to revolve 360 degrees. e. Valve to be furnished with bronze rollers, bronze or stainless-steel tracks and bronze scrapers.

Section	Title	Revision Summary
40	02610 Valves	Paragraph 2.6.B. has been edited as follows: 1. Mueller 2” Corporation Stop model # H10045N 2. A.Y. McDonald model #731488 3. Cambridge Brass model #301NL-A7F7 4. No other products nor manufacturers are acceptable

HRSD Design and Construction Standards - January 2023
Table of Contents

Section No.	Subject	Page No.
Forward	Engineering Director's Viewpoint	Forward
1.	Introduction	1-0
	A. Purpose	
	B. Expectations, Outcomes and Sustainability	
	C. Project Delivery Methods	
	D. Distribution	
	E. Preparation of Design Documents	
	1. General Requirements	
	2. Study and Preliminary Engineering Report (PER)	
	3. Project Manual (Contract Requirements, Technical Specifications and Construction Drawings)	
	F. Common Historical Issues in the Design and Construction Phase	
	1. Design Phase	
	2. Construction Phase	
	G. Use of Autonomous Vehicles (AV)	
	Attachment A – Minimum Required Sections for a PER	A
2.	Architectural and Landscaping Design and Review Process	2-0
	A. Introduction	
	B. HRSD Architectural Review Committee (ARC)	
	Attachment A - HRSD Facilities Architectural Guidelines.	A
	Attachment B - Aesthetics Consideration Log	B
	Attachment C - Address Sign Specification	C
	Attachment D - Safety Sign Specification for Buildings	D
	Attachment E - Landscaping Planting Plan Sample	E
3.	Use of Technical Memorandum for CIP Projects	3-0
	A. Introduction	
	B. Circumstances for Use	
	C. Approval for Use	
4.	Monthly Project Status Reporting	4-0
	A. Introduction	
	B. Content and Format for Project Status Report (Part 1)	
	C. Content and Format for Project Expenditure Tracking (Part 2)	
	Exhibit A – FIRM Progress Report Template	
	Exhibit B – Project Expenditure Tracking Template	
5.	Capital Project Cost, Schedule, and Risk Reporting	5-0
	A. Introduction	
	B. Professional Services Firm (FIRM) Responsibilities	

Section No.	Subject	Page No.
	Attachment A - Project Cost, Schedule and Risk Example Report	A
	Attachment B – Project Budget Estimate History and AACE OPCC Classification Report	B
	Attachment C – Project Schedule Example	C
	Attachment D – Project Budget Template	D
6.	Drawings, Record Drawings, and Valve Guides	6-0
	A. Introduction	
	B. Drawings	
	C. Record Drawings	
	D. Bid Documents	
	E. Valve Guides	
	Exhibit A: Valve Guide Format and Examples	
7.	HRSD Building Information Model (BIM) Requirements	7-0
	1.0 Introduction	
	2.0 Level of Development (LOD) Tables	
	3.0 BIM Execution Plan	
	4.0 Model File Creation	
	5.0 Shared Coordinates	
	6.0 Family Creation	
	7.0 Shared Parameter File	
	8.0 Contract Drawings	
8.	PER, Design, and Construction Submittal Requirements	8-0
	A. Introduction	
	B. Requirement for Submittals	
	1. Format for Digital Files	
	2. Seamless AutoCAD Files	
	3. Interim Record Drawings	
	4. Interim Valve Guides	
	5. Final Record Drawings	
	6. Final Valve Guides	
	7. Shop Drawings	
	8. Operation and Maintenance (O&M) Manuals	
	9. Conformed Documents	
	10. Soil Resistivity / Corrosivity Analysis	
	Attachment A – Summary of Major Submittals to HRSD	A
	Attachment B – Equipment Record Template (Excel)	B
	Attachment C – Soil Corrosivity Template (Excel)	C
9.	Real Estate Acquisition and Plat Guidelines	9-0

Section No.	Subject	Page No.
	A. Introduction	
	B. Real Estate Schedule vs. Project Schedule	
	C. Easements	
	D. Design Engineer's Estimate	
	E. Justification Memorandum	
	F. Phase 1, Environmental Site Assessment (ESA)	
	G. Location Map	
	Exhibit A – Real Estate Schedule vs. Project Schedule	
	Attachment A – Sample - Plat	A
	Attachment B – Project Acquisition Tracking Log	B
	Attachment C – Sample – Engineer's Estimate	C
	Attachment D – Sample - Design Consultant	D
	Attachment E - Sample - Real Estate Consultant	E
	Attachment F - Sample – Phase 1 ESA	F
	Attachment G - Sample – Location Map	G
10.	Flood Elevation Requirements	10-0
	A. Introduction	
	B. Definitions	
	C. Locality Code Requirement	
	D. Asset Protection Requirements	
	E. Locality Freeboard Requirements	
11.	Public Communication Program	11-0
	1. Engage with Locality Staff	
	2. Alert Public Officials	
	3. Identify Project Stakeholders	
	4. Participate in Public Open House / Community Meetings	
	5. Virtual Presentation for Open House	
	6. Establish a Project Website	
	7. Website Updates	
	8. Stakeholder Updates	
	9. Distribute Project Introductory Notice to Neighbors	
	10. Post Project Signs	
	11. Construction Update Notices	
	12. Additional Notices	
	13. Post Variable Message Boards (VMB)	
	14. Traffic Advisories / Media Releases	
	15. Response to Public and Media Inquiries	
	16. Social Media Mini Updates	
	Attachment A - Public Participation Program – Project Manager Checklist	A
	Attachment B - Stakeholders List Template	B

Section No.	Subject	Page No.
	Attachment C - Willingness to Hold Sample	C
	Attachment D – Informational Open House Advertisement Sample	D
	Attachment E - Open House Notice to Public Template	E
	Attachment F – Open House Requirements	F
	Attachment G - Open House Sign-In Sheet	G
	Attachment H - Open House Comment Card	H
	Attachment I - Advertisement Submission Schedule	I
	Attachment J – Virtual Presentation Example	J
	Attachment K – New Project Webpage Template	K
	Attachment L – New Project FAQs Template	L
	Attachment M – New Project Map Template	M
	Attachment N - Alternate Neighborhood Overview Map Template	N
	Attachment O - Stakeholders Notification Update	O
	Attachment P - Project Introductory Notice to Neighbors Template	P
	Attachment Q - Project Sign Sample	Q
	Attachment R - HRSD Standard Signage Sample	R
	Attachment S - HRSD Sign & Base Specifications	S
	Attachment T - Construction Update Notices Template	T
	Attachment U - CCTV Inspection Notice	U
	Attachment V - CCTV Notice with Cleaning and Inspection	V
	Attachment W - Smoke Testing Notice	W
	Attachment X - Smoke Testing Notice-Door Card Hanger	X
	Attachment Y - Survey Notice	Y
	Attachment Z - Survey Notices – Mailing and Tracking Log	Z
	Attachment AA - Lateral Work Notice	AA
	Attachment BB - Reminder Notice to Neighbors-Day Before Work: cleaning, inspection, lateral, etc.	BB
	Attachment CC – Completed Work Notice to Neighbors-Work Adjacent to Home: cleaning, inspection, lateral, etc.	CC
	Attachment DD - Geotechnical Borings Notice Example	DD
	Attachment EE – Unplanned Power Interruption Notice	EE
	Attachment FF – Unplanned Water/Sewer Service Interruption Notice	FF
	Attachment GG - Project Closeout Notice	GG
	Attachment HH - Media Release - Traffic Advisory Example	HH
	Attachment II – Media Card Example (Media/ Project Inquiries)	II
12.	Preconstruction Assessment and Damage Mitigation Procedures	12-0
	A. Introduction	

Section No.	Subject	Page No.
	B. Organization of Section	
	1. Stage 1 – Construction Impact Research and Evaluation	
	a. Research and Investigations during Design Phase	
	b. Determinations during the Design Phase	
	c. Potential of Construction Related Impacts	
	i. Noise Generation and Impacts	
	ii. Vibration Impacts	
	iii. Dewatering Impacts on Ground and Structure Settlement	
	iv. Construction Impacts on Existing Topography, Hard Surfaces, Hydrology, and Construction Travel Routes	
	v. Dust, Odor, and Other Emissions Beyond Construction Zone	
	vi. Jurisdictional Limitations, Requirements, or Ordinances	
	d. Determination of construction zone of influence for all potential construction related impacts	
	2. Stage 2 – Risk Mitigation Analysis and Bid Document Development for Contractor Actions	
	a. Noise Impacts, Restrictions, and Abatement	
	b. Vibration Impacts, Abatement, and Monitoring	
	c. Groundwater Dewatering Requirements	
	d. Pre-Construction Surveys and Assessments within Construction Corridors and Impact Areas	
	e. Fugitive Emissions Controls and Restrictions	
	3. Stage 3 – Specific Pre-Construction Field Surveys and Construction Activity Monitoring Programs	
	a. Responsibilities of the FIRM	
	b. Responsibilities of the Contractor	
	c. Identification of Other Party Responsibilities	
	Attachment A - Sample – Vibration Generation and Impacts (diagram and impact table) / Noise and Vibration Impacts (combined map)	A
	Attachment B - Sample – Noise Generation and Impacts (diagram and impact table)	B
	Attachment C - Sample – Dewatering Impacts	C
	Attachment D - Pre-Construction Conditions Assessment Communications and Contact Tracking Log Template	D
	Attachment E - Assessment of Pre-Existing Conditions - Right to Access Property Form	E
	Attachment F - Letter to Property Owner Template for Pre-Existing Conditions Assessment	F

Section No.	Subject	Page No.
	Attachment G - Pre-Existing Condition Assessment Reporting Form Template	G
	Attachment H – Sample – Precondition Assessment and Damage Mitigation Report	H
	Attachment I: Sample – Precondition Assessment Field Survey Report (excerpts)	I
13.	Coordination with Virginia DEQ for Certificate to Construction and Certificate to Operate	13-0
	A. Introduction	
	B. Approval CTC Process for State Water Quality Improvement Fund (WQIF) Projects	
	C. Abbreviated Administrative Process for Non-WQIF Projects	
	D. Approval Process for Non-WQIF Projects that Involve Greater than 25% Capacity Increase or Decrease	
	E. Relocation, Replacement-In-Kind, Maintenance or Emergency Projects	
	F. Online Resources within DEQ for Approval Process	
	Exhibits A thru D – Template Letters to DEQ	
14.	Coordination of Preconstruction Phase Issues	14-0
	A. Introduction	
	B. Coordination with Engineering Contract Specialist	
15.	Preparation of and Format for Construction Addenda	15-0
	A. Introduction	
	B. Guidelines and Specific Requirements	
	Exhibit A - Addendum Template	
16.	Preparation of and Format for Conformed Documents	16-0
	A. Introduction	
	B. Specifications	
	C. Drawings	
	D. Format and Number of Conformed Documents	
17.	Tracking of Construction Phase Milestones and Performance Metrics	17-0
	A. Introduction	
	B. Completion and Submittal of Construction Milestone Tracking Form	
	C. Performance Metrics	
	Attachment A - Active Construction Project Tracking Form	A

Section No.	Subject	Page No.
18.	Expectations for Construction Administration and Construction Inspection	18-0
	A. Introduction	
	B. Organization of Section	
	C. General Expectations	
	D. Preconstruction	
	E. General Procedures	
	F. Tie-In, Shutdown, and Diversion Procedures	
	G. Line Stop Procedures	
	H. Trenchless Crossing Procedures	
	I. Damage Assessment and Claims Procedures	
	J. Training	
	K. Record Keeping	
	L. Staffing	
	M. Verification	
19.	Use of Air Vent Proving Tool	19-0
	A. Introduction	
	B. FIRM Responsibilities and Procedures	
20.	Condition Assessment Protocol	20-0
	A. Introduction	
	B. Pre-Planning Phase	
	C. PER and Design Phase	
	D. Pipe Coupon Data Collection Form	
	E. Technical Specifications	
	F. Condition Assessment Guidelines	
	Attachment A – Pipe Coupon Data Collection Form	A
21.	Regulatory Reporting Requirements for Spills	21-0
	A. Introduction	
	B. Procedures	
	C. Contact Information	
22.	HRSD Safety Programs	22-0
	A. Introduction	
	B. Safety Programs	
	1. Hazard Communication Program	
	2. Hot Work Permit Program	
	3. Lock Out / Tag Out Program	
	4. Confined Space Entry Program	
	5. Plant Access Procedures for Contractors	
	6. NFPA 70E	

Section No.	Subject	Page No.
	7. Fall Protection	
	8. Correction of Safety Issues	
	9. Excavations and Trenching	
	10. Fire Protection Systems	
	11. Housekeeping	
	12. Outside Contractor Briefing	
	13. Asbestos Awareness Program	
	14. Weapons Policy	
	15. Use of HRSD Equipment	
	Attachment A - Asbestos Checklist	A
23.	VDOT 2011 Work Area Protection Manual (WAPM) Requirements	23-0
	A. Introduction	
	B. Training Requirements for Construction Inspectors	
	C. Personal Protective Equipment (PPE) Requirements	
	Attachment A – Personal Protective Equipment Requirements for Work Zone Operations	A
24.	Pipelines and Appurtenances	24-0
	A. Introduction	
	B. General	
	1. Design Specifics	
	2. Corrosion Prevention	
	3. Protective Linings	
	4. Bid Document Development	
	C. Force Mains	
	1. Design Specifics	
	2. Hydrostatic Pressure Test Procedures	
	D. Line Stops	
	1. Guidelines for Use	
	2. Design Considerations	
	3. Qualifications to be Incorporated into Bid Documents	
	4. Liquidated Damages	
	E. Valves	
	1. Gate Valves and Plug Valves	
	2. Disposition of Existing Inline Valves to be Abandoned	
	3. Automatic Air Release Valves	
	F. Gravity Interceptors and Manholes	
	Attachment A – Report of Hydrostatic Pressure Test	A
25.	Checklist for Line Stop Installations	25-0
	A. Introduction	
	B. Completion and Submittal of Checklist for Line Stop Installations	

Section No.	Subject	Page No.
	Attachment A – Checklist for Line Stop Installation Form	A
26.	Checklist for Tie-Ins to Existing Interceptor Force Mains	26-0
	A. Introduction	
	B. Completion and Submittal of Checklist for Tie-Ins to Existing Interceptor Force Mains	
	Attachment A - HRSD Checklist for Tie-Ins to Existing Interceptor Force Mains	A
27.	Trenchless Crossing Installations	27-0
	A. Introduction	
	B. General Evaluation Criteria	
	C. New Trenchless Pipe Installations	
	1. Horizontal Directional Drilling (HDD)	
	2. Jack & Bore and Microtunneling	
	3. Ground Penetrating Radar (GPR) Use	
28.	Checklist for Trenchless Crossing Operations	28-0
	A. Introduction	
	B. Completion and Submittal of Checklist for Trenchless Crossing Operations	
	Attachment A – HRSD Checklist for Trenchless Crossing Operations	A
29.	Rehabilitation of Sanitary Sewer Systems	29-0
	A. Introduction	
	B. General Evaluation Criteria	
	C. Sanitary Sewer System Rehabilitation	
	1. Cleaning	
	2. Closed-Circuit Television Video (CCTV)	
	3. Diversion Pumping	
	4. Gravity Sewer Rehabilitation	
	a. Cured In Place Pipe (CIPP)	
	b. Folded and Reformed Liners	
	c. Formed In Place Pipe (FIPP)	
	d. Sliplining	
	e. Pipe Bursting	
	5. Lateral Reinstatement	
	6. Manhole Rehabilitation	
	7. Post Construction & Rehabilitation Evaluation for Gravity Sewer Mains and Manholes	
30.	Pump Stations	30-0

Section No.	Subject	Page No.
	A. Introduction	
	B. Description of Operations	
	1. Wet Well / Dry Well Pump Station	
	2. Pressure Reducing Station (PRS)	
	C. General	
	D. Site Issues and Layout	
	E. Masonry	
	F. Equipment	
	G. Conveying Systems	
	H. Mechanical	
	I. Electrical & Instrumentation	
	Attachment A - Pump Station Substantial Completion Checklist	A
	Attachment B - Temporary Portable Pump Alarms and Setup Standards	B
31.	Treatment Plants	31-0
	A. Purpose	
	B. Abbreviations	
	C. Sewage Treatment Design and Operation	
	D. SWIFT Facilities Design and Operation	
	E. Solids Handling Design and Operation	
	F. Access to Unit Processes and Equipment	
	G. Sampling	
	H. Chemical Containment	
	I. Chemical Feed Systems	
	J. Drain Systems	
	K. Emergency Eyewash and Showers	
	L. Equipment Numbering Sequences	
	M. Equipment Spare Parts	
	N. Miscellaneous Pump Items	
	O. Noise Abatement for Installed Stationary Equipment	
	P. Non-Potable Water Systems	
	Q. Odor Control and Room Ventilation	
	R. Pipe Insulation and Heat Tracing	
	S. Primary and Secondary Clarifiers	
	T. Process Air Piping	
	U. Process Flow Splitting	
	V. Scum Handling, Piping and Pumping	
	W. Grit, Septage and Grease, and Biosolids	
	X. Site Lighting	
	Y. Slide and Sluice Gates	
	Z. Solids Piping	

Section No.	Subject	Page No.
	AA. Travel Path (Walkway) Alignment	
	BB. Yard Piping	
	CC. Functional Descriptions	
	DD. Operational Technical Information System (OTIS)	
	EE. Equipment Startup, Training, and Turnover	
	FF. Flow Metering	
32.	Electrical and Instrumentation	32-0
	A. Introduction	
	B. General	
	C. Pump Station and Interceptor Systems Table	
	D. Treatment Plant Table	
	Exhibit A "HRSD Arc Flash Mitigation Workshop"	
	Exhibit B "Load Bank Connections"	
	Exhibit C "Variable Frequency Drive"	
	Exhibit D "HRSD Lighting Guidelines"	
	Exhibit E "HRSD Electric Motor Specifications"	
	Exhibit F "Stilling Well for Level Transducer Pumping Stations or Treatment Plants"	
	Exhibit G "Temporary Portable Pump Alarms and Setup Schedule"	
	Exhibit H "SCADA / MMP Site"	
	Exhibit I "Future SWIFT Design"	
	Exhibit J "Reinforced Concrete Encased Ductback Construction Detail"	
	Exhibit K "Coordination with Dominion Energy"	
	Exhibit L "SCADA 2.0 Process Flowchart"	
	Exhibit M "Remote Switch Operator Open/Close Breaker Station – Pump Station	
	Exhibit N "Remote Switch Operator Open/Close Breaker Station – Treatment Plant	
	Exhibit O "Flow Meters"	
	Exhibit P "Limitorque Electric Actuator"	
	Exhibit Q "Waterpilot – Pump Station"	
	Exhibit R "Strategic Automation Configuration (DCS)"	
33.	Information Technology Infrastructure Hardware	33-0
	A. Introduction	
	B. General	
	C. Specific Requirements	
34.	Miscellaneous	34-0

Section No.	Subject	Page No.
	A. Introduction	
	B. Site	
	1. Site Drainage	
	2. Landscaping	
	3. Plant Material	
	4. Concrete Curb and Gutter	
	5. Sidewalks	
	C. Concrete	
	D. Masonry	
	E. Metals and Plastics	
	1. Hand / Guard Rails and Stair Systems	
	2. Hatches	
	3. Grating	
	F. Thermal and Moisture Protection	
	1. Roofing	
	G. Doors and Hardware	
	1. General	
	2. Pump Stations	
	3. Treatment Plants	
	4. Electronic Entry-Access Control	
	H. Painting and Coatings	
	1. Painting and Coating Systems	
	2. Limits of Coatings in Covered Tanks	
	3. Pump Stations	
	I. Architectural / Structural	
	J. Interior Finishes	
	K. Miscellaneous Accessories	
35.	Standard for Capital Improvement Projects that Involve Construction Dewatering Activities	35-0
	A. Introduction	
	B. Background	
	C. Requirements	
	D. Receiving Sewer System	
	E. Contacts	
	Attachment A – Anticipated Schedule from Initial Investigation to General Permit Acquisition	A
	Attachment B – Contaminated Identification Table	B
36.	Standard Details	36-0
	A. Introduction	
	B. Listing of Standard Details	

Section No.	Subject	Page No.
	1. Series 100: Miscellaneous	Series 100 Details
	100 - Standard Cover Sheet	
	101 - Exterior Bollard Detail	
	102 - Bollard Location Detail	
	103 - Load Test Hinged Bank Box	
	104A/B - Flush-mount Groundwater Monitoring Well	
	105 - Recovery Sheet Template	
	2. Series 200: Collection Systems and Appurtenances	Series 200 Details
	200A/B - Precast Concrete Manhole with Extended Monolithic Base	
	201 - Precast Concrete Shallow Manhole with Extended Base	
	202A/B - Sanitary Sewer Straddle Manhole	
	203 - Connection into Existing Manholes	
	204 - Manhole Invert Shaping	
	205 – Precast Concrete or Brick Manhole Inside Gravity Drop Connection to Existing Manhole	
	206 – Precast Concrete Outside Drop Manhole	
	207 - Precast Concrete or Brick Manhole Inside Force Main Drop Connection to Existing Manhole	
	208 – Precast Concrete Sanitary Sewer Manhole Adjustment	
	209 - Manhole Insert	
	226 – Service Lateral and Gravity Main Connection to Existing Stub-out	
	227 - Standard Manhole Frame and Cover	
	228 - Manhole Frame and Cover – Watertight	
	229A/B – Sanitary Sewer Lateral Installation	
	230 – Sanitary Sewer Service Connection for New Developments or Existing Gravity Mains	
	231 – Sanitary Service Lateral Deactivation	
	232 – Alternate Service Lateral Connection to Existing Gravity Sewer Main	
	233 – Permanent Sewer Lateral Deactivation at HRSD Manhole	
	251 – Sanitary Sewer Service Clean Out Frame and Cover (Non-Traffic Rated)	
	252 – Sanitary Sewer Service Clean Out Frame and Cover (Traffic Rated)	
	276 – Vacuum Air Intake Valve	
	277 – Lateral Connection to Existing Vacuum Valve Pit	
	278 – Vacuum System Division Valve	

Section No.	Subject	Page No.
	3. Series 300: Interceptors and Appurtenances	Series 300 Details
	300 - Connection to Existing HRSD Valve (No Potential for Additional Development)	
	301 - Connection to Existing HRSD Valve (Additional Development is Possible)	
	302 - Connection to Existing HRSD Valve (Additional Development is Imminent)	
	303 – New Wet Taps (No Potential for Additional Development)	
	304 – New Wet Taps (Additional Development is Possible)	
	305 – New Wet Taps (Additional Development is Imminent)	
	306A – 2” Private Force Main Connection to Existing 2” HRSD Force Main Stub	
	306B – Valve Vault for 2” HRSD Valve	
	306C – Vault Lid for 2” HRSD Valve	
	307 – Lawnes Point Private Connection Detail	
	308 – Private Force Main to HRSD Asset	
	309 – New Grinder Pit Connection to Existing HRSD Force Main	
	326 – Horizontal Gate Valve	
	327 – Vertical Gate Valve	
	328 - Valve Box and Riser for Mainline Valve	
	329 – Valve Box and Riser for Bypass Valves	
	330 – Valve Riser Adjustment	
	331A/B - Roadside Ditch – Valve Box	
	332 – Tracer Wire Locator Box	
	351 – Manual Air Vent	
	352A/B - Air Release Valve Box Adjustment	
	353 - Roadside Ditch – Air Vent	
	354 - Air Vent Frame and Cover	
	355 – Standard Air Vent Detail for Future Automatic Air Release Valves	
	376 - Tapping Saddle for Cast Iron, Ductile Iron, Reinforced Concrete and PVC Pipes	
	377 - Tapping Saddle for Concrete Cylinder Pipe	
	378A/B - Steel Casing Detail	
	379 - Ductile Iron MJ Spigot to Concrete Transition Adapter (Male)	
	380 - Ductile Iron MJ Spigot to Concrete Transition Adapter (Female)	
	381 - Pressure Sensor Installation	
	382 – Concrete Cylinder Pipe Line Stop Detail	

Section No.	Subject	Page No.
	383 – Ductile / Cast Iron Line Stop Detail	
	4. Series 400: Pump Stations and PRS	Series 400 Details
	400A/B – Small Communities Sample Design Detail – Submersible Pump Station	
	401A/B – Underground Storage Tank	
	402A/B – Underground Fuel Tank	
	5. Series 500: Cathodic Protection for Pipes	Series 500 Details
	500A/B - Cathodic Protection Test Station and Terminal Board Wiring	
	501 - Cathodic Protection Isolation Detail	
	502 – Anode Test Station	
	503 – Monitoring Test Station	
	504 – Monitoring Test Station (with Riser)	
	505 – Isolation Flange Test Station	
	506 – Isolation Flange Test Station (with Riser)	
	507 – Anode Header Cable Splice – Wye Type	
	508A – Typical Thermite Weld Procedures on Bonding Plate	
	508B – Typical Royston Handy Cap IP™ Installation	
	509 – Isolating Flange Kit	
	510 – Typical Bonding Plate	
	511 – Copper Wire to Pipe Pin Brazing Procedures	
	521 – Ductile Iron Pipe Galvanic System AC Ground Mat	
	522 – Ductile Iron Pipe Galvanic System Insulating Corporation	
	523 - Ductile Iron Pipe Galvanic System Main Bonding	
	6. Series 600: Cathodic Protection for Buildings	Series 600 Details
	600 – Installation of Discrete Galvanic Anodes	
	601 – Installation of Distributed Galvanic Anodes	
	602 – Distributed Galvanic Anodes at Top of Wall	
	603 – Installation of Drilled-in Galvanic Anodes	
	604 – Conductive Mortar Bridge for use with High Resistivity Repair Mortars	
	605 – Typical Galvanic Anode Layout	
	606 – Typical Galvanic Anode Connections	
	626 – Removal of Unsound Concrete Typical Section	
	627 – Concrete Rebuild Typical Section	
	628 – Concrete Rebuild to Provide Minimum Cover Typical Section	
	629 – Removal of Unsound Concrete Typical Corner Section	
	630 – Concrete Rebuild Typical Corner Section	

Section No.	Subject	Page No.
	631 – Reinforcing Section Loss Table	
	632 – Lap Splice – Option 1	
	633 – Lap Splice Lengths – Option 1	
	634 – Mechanical Splice – Option 2 Typical Removal Section	
	635 – Mechanical Splice – Option 2 Typical Rebuild Section	
	636 – Weld Splice – Option 3	
	637 – Weld Splice Details A – Option 3	
	638 – Weld Splice Details B – Option 3	
	639 – Supplemental Reinforcement Requirements	
	640 – Adhesive Grouted Dowel Layout	
	641 – Typical Concrete Rebuild Section at Embed Plate	
	642 – Shallow Depth (2" Max) Concrete Rebuild Horizontal	
	643 - Shallow Depth (2" Max) Concrete Rebuild Vertical	
	644 – Partial Depth Core Hole Concrete Rebuild	
	645 – Full Depth Core Hole Concrete Rebuild	
	651 – Typical Sealant Details	
	7. Series 700: Electrical and Instrumentation Details	Series 700 Details
	700 - Wet Well Pump Wiring Electrical Backboard Detail	
	701A/B - Antenna Installation Detail	
	702A/B - Intrinsic Safety Panel	
	703 - Temporary Pump Enclosure Detail	
	704 - Actuator Vault Electrical Backboard Detail	
	705 - Instrument Vault Electrical Plan	
	706 - Actuator Vault Electrical Plan	
	707A/B - Wet Well Instrumentation Installation Detail	
37.	Suggested Division 1 Items	37-0
	A. Introduction	
	B. Table of Division 1 Items for FIRM Consideration	
38.	Front End Documents	38-0
	A. Introduction	
	B. Responsibilities of the FIRM	
	C. Standard Front End Documents	
	1. Project Specification Cover	
	2. Table of Contents	
	3. Advertisement for Bids	
	4. Instruction to Bidders	
	5. Questionnaire	
	6. Bid Bond	
	7. Agreement	
	8. Performance Bond	

Section No.	Subject	Page No.
	9. Payment Bond	
	10. Warranty Bond	
	11. Escrow Agreement	
	12. VCWRLF Requirements	
	13. WIFIA Requirements	
	14. Standard General Conditions of the Construction Contract	
	15. Supplementary Conditions	
	D. Specific Documents Requiring FIRM Input	
	1. Advertisement for Bid	
	2. Instructions to Bidders	
	3. Questionnaire	
	4. Agreement	
	5. Supplementary Conditions	
	Attachment A – EJCDC Front End Documents (PDF)	A
39.	Construction Administration Forms/Format	39-0
	A. Introduction	
	B. Contract Administration Forms	
	1. Sample Bid Recommendation Letter	A
	2. Notice of Award	B
	3. Notice to Proceed	C
	4. Emergency Contact List	D
	5. Field Order	E
	6. Request for Proposal	F
	7. Work Change Directive	G
	8. Change Order	H
	9. Application for Payment	I
	a. Summary Sheet	
	b. Schedule of Values – Lump Sum	
	c. Schedule of Values – Unit Price	
	d. Stored Materials Inventory	
	e. Diversity Procurement Statement	
	f. Diversity Procurement Statement starting *July 1, 2023*	
	g. WIFIA Requirement Only: HRSD Contractor Progress Report	
	10. Certificate of Substantial Completion	J
	11. Notice of Acceptability	K
	12. Warranty Memorandum	L
40.	Master Specification Sections Overview	40-0
	A. Introduction	
	B. Listing of Master Specification Sections	
	01010 – Summary of Work	01010

Section No.	Subject	Page No.
	01040 - Coordination	01040
	01060 – Special Conditions	01060
	01270 – Measurement and Payment	01270
	01323 – Record Documents	01323
	01340 – Submittals	01340
	01520 – Maintenance of Pipeline and Pumping Operations	01520
	01560 – Environmental Protection and Special Controls	01560
	01650 – Facility and System Start-up	01650
	02510 – Ductile Iron Pipe	02510
	02520 – Polyvinyl Chloride Pipe	02520
	02530 - High Density Polyethylene (HDPE) Pipe and Fittings	02530
	02531 – Line Stops on Sanitary Sewer Force Main Systems	02531
	02610 – Valves	02610
	02710 – Contaminated Groundwater Management	02710
	02761 – Television Inspection of Pipelines	02761
	02773 – Ultrasonic Pipeline Inspection	02773
	02774 – Condition Assessment Data Collection for Pipelines Being Repaired or To Be Abandoned	02774
	03700 – Concrete Rebuild	03700
	03800 – Embedded Galvanic Anodes for Concrete Rebuild	03800
	07160 – Reactive Waterproofing	07160
	07900 – Joint Sealants and Expansion Joint Systems	07900
	09900 – Protective Coatings	09900
	13110 – Cathodic Protection	13110
41	VDEQ Project Funding	41-0
	A. Introduction	
	B. Checklists	
	C. Attachments	
	Attachment A - Initial Meeting Review of VCWRLF Program Requirements & Procedures	A
	Attachment B - Map to Loan Closing and Closeout Wastewater Projects	B
	D. Additional Resources	

Forward

Director of Engineering's Viewpoint

The HRSD Engineering Department was created in 1987 to better manage the growing infrastructure needs of the organization. Since the inception of the Engineering Department, it has been our goal to rely on both the region's consulting and contracting community to provide needed support to complement and supplement the capabilities of HRSD staff.

As an extension of our staff, we expect consultants to work collaboratively to find the best solution to a problem or issue. We expect our consultants to be technically competent and strive for innovative solutions. A great project is only possible if we have competent contractors to implement the design intent and to use best construction practices. The blending of design and construction requires a team approach and a mindset of collaboration. On large projects we often use the process of Partnering to assure project success. The concept of Partnering is built on the foundational areas of content, procedures and relationships. Partnering strives to build an environment of trust and mutual respect between all parties. Although we typically use formal Partnering on large projects, the concepts inherent in this approach are applied to all projects. An important component in any relationship is trust with the components of trust being reliability, competence, sincerity, and care. Trust is built on integrity, communication and a clear understanding of the expectations and needs of all team members. These concepts are not new and can be easily forgotten as difficult challenges arise during the delivery of projects.

We expect the project team to deliver a quality project. We define quality as consistently meeting or exceeding customer expectations. A quality project must strike a balance between budget, schedule, quality and sustainability. Open, honest and effective communication is essential for success. We expect our staff, and therefore our consultants/contractors, to keep HRSD's Vision in mind as we plan, design and construct needed infrastructure. This Vision is; "Our communities will have clean waterways and reliable water resources for generations to come."

At the end of the day, we are a team. There can be no losers. We should look to find ways to meet the goals of each respective team member while delivering on the infrastructure needs of HRSD. The ratepayers of HRSD expect that we will do these things and we must deliver!

Section 1 - Introduction

A. Purpose – The purpose of this document is to present information to Professional Services Firms to design projects, prepare construction documents and provide contract administration and inspection more efficiently while satisfying the needs and desires of HRSD. The term "FIRM" is used throughout this document to refer to the firm or individual providing professional consulting services for the design, contract administration, and inspection of HRSD facilities. HRSD expects the FIRM to bring their experience, expertise, and enthusiasm to projects while recognizing the culture and desires of HRSD. The FIRM must carefully review the information contained in this document, raise questions where appropriate, and deliver projects, which incorporate HRSD standards as laid out in this document. HRSD must be specifically advised in writing of any cases when these standards that make up this document have not been incorporated in the final plans, specifications, and Bid Documents.

B. Expectations, Outcomes and Sustainability – For an Engineered Construction Project to be successful, a number of outcomes are required. These outcomes include meeting project quality, schedule and cost objectives. Projects must meet all regulatory, environmental, safety and other needs of HRSD and the citizens we serve. Each project results in the delivery of infrastructure assets to HRSD. These assets must provide the needed level of service, within an acceptable level of risk, at the lowest life cycle cost. As such, FIRMs should consider the full life cycle of assets when planning, designing, and constructing HRSD projects. Life cycle cost accounting should include capital, operating, maintenance, rehabilitation, and decommissioning costs of the asset. FIRMs should compare asset alternatives based on Net Present Value (NPV) per anticipated years of service (NPV/anticipated years of service). HRSD strives to deliver projects sustainably. To be consistent and develop a common understanding of what sustainability means, FIRMs shall utilize the Institute for Sustainable Infrastructure (ISI) Envision checklist when evaluating and designing projects. The Envision checklist will assist the project team in identifying and engaging stakeholders, identifying project risks and opportunities, and evaluating the project from multiple perspectives. Because project adjustments can be most economically incorporated early in a project's life, the first use of the Envision checklist should occur sometime between the start of preliminary engineering and the start of project design. The primary goal of utilizing ISI Envision is to plan, design, and construct better infrastructure projects for HRSD, our ratepayers, and our local partners; not to receive accreditation or an award. In some instances, pursuing project accreditation and award may be justified. Better infrastructure projects are the result of evaluating the project from economic, social, and environmental perspectives (the triple bottom line or TBL) and evaluating project alternatives and project components based on their life cycle costs. For certain small, fast-track or specialized projects, use of the Envision Checklist may not be required. Elimination of this requirement should be discussed and approved by the HRSD Project Manager.

C. Project Delivery Methods – As a political subdivision of the Commonwealth of Virginia, HRSD follows the requirements of the Virginia Public Procurement Act. In addition, HRSD has developed the HRSD Procurement Policy to more specifically define our efforts to meet specific procurement related matters. Engineered construction projects are typically delivered

using a Design-Bid-Build method, however HRSD has the authority to use alternative forms of project delivery if certain procedures and requirements are followed. Alternative (or Collaborative) delivery methods including Construction Management, Job Ordering Contracting and Design-Build are evaluated on a case-by-case basis and must be approved by HRSD Commission for each project prior to starting an Alternative Delivery method.

These Design and Construction Standards were first developed when the traditional Design-Bid-Build project delivery was the recognized means of accomplishing HRSD's capital program. Although HRSD has adopted forms of alternate or collaborative project delivery, these Standards still are primarily to provide FIRMs guidance on preparation of Bid Documents for Design-Bid-Build project delivery and to provide expectations for the FIRM throughout the life of these delivered projects. Sections of these Standards may be appropriate for Design-Build (DB) project delivery and Construction Management (CM) project delivery with permission from the responsible HRSD Project Manager. FIRMs must exercise caution when using these Standards and providing or referencing these Standards for DB project delivery to properly balance between prescriptive, performance, and preference elements.

D. Distribution - This document is incorporated by reference into all HRSD Professional Services Agreements for the design and construction of HRSD facilities. This document is posted on the HRSD web site at www.hrsd.com

E. Preparation of Design Documents – HRSD employs numerous FIRMs for technical assistance in the preparation of design documents. Each of these FIRMs bring unique expertise to the design effort. These differences result in new ideas and methods for both the design and implementation of HRSD's Capital Improvement Program. Although HRSD has some specific preferences for certain aspects of the design, much of the procedures, details and technical information required for the project should be determined by the FIRM. The following information is an overview of some of the general requirements required by HRSD for the preparation of design documents.

1. General Requirements

    a. Vertical construction projects (pump stations, pressure reducing stations, treatment plants, wet weather storage tanks, and administrative buildings) are to be designed in a 3-D CADD format as approved by HRSD Project Manager that can be viewed and reviewed by HRSD staff with non-licensed viewer software packages and are compatible with BIM use. HRSD may request additionally that these 3-D models support both virtual reality (VR) and augmented reality (AR) for design reviews. The FIRM shall continue to incorporate changes proposed by the Contractor during submittal reviews and Change Proposals to confirm that alternate equipment, materials, and changes from the FIRM's developed Bid Documents will not cause further conflicts. The final 3-D design files are also to be delivered to HRSD in their native software format unless otherwise requested.

b. Total project cost estimates should be provided listing design, construction, land acquisition, wetlands mitigation and all other anticipated project costs. Costs should also include necessary contingencies and these contingencies should be clearly defined. Along with each developed and published project or construction cost estimate by the FIRM, the ENR Construction Index of the month the estimate was prepared shall be documented in the footnote of the published cost estimate.

2. Study and Preliminary Engineering Report (PER)

a. Studies and PERs should clearly state the purpose, goals and assumptions used in preparation of the document.

b. The PER should include an Executive Summary in the front of the document. The Executive Summary should include a brief overview of the project, recommendations, all project costs (design, construction, property acquisition, etc.) and schedule to implement the work. The Executive Summary should be limited to approximately five (5) pages. The PER should consider alternates for the the various systems, processes and equipment to be included in the final design. Materials of construction for the significant items of construction should also be included. A thoughtful method of comparing various alternatives is needed with specific recommendations.

c. Large amounts of data or other technical information should be included in an appendix with a summary of the information included in the text of the document.

d. Studies and PERs must be provided in an electronic PDF format for ease of use by HRSD. Paper copies may also be required and the quantity of those is project specific.

e. Specific requirements for the technical aspects of the study or PER will be included in the Professional Services Agreement.

f. PERs should be prepared in compliance with the Commonwealth's Sewage Collection and Treatment (SCAT) Regulations.

g. Depending on the type of project, HRSD has an expectation and process for incorporating architectural features and landscaping into site rehabilitation and both new and rehabilitation of vertical projects (pumping stations, pressure reducing stations, wet weather storage tanks, administration buildings, and certain treatment plant facilities). Specifics regarding these architectural guidelines and HRSD's Architectural Review Committee's role in the PER and Design phases is included in Section 2 – Architectural and Landscaping Design and Review Process.

h. Attachment A to this section includes a listing of minimum required sections / chapters for a PER. The desired outcome of this effort is to facilitate focused reviews of these chapters by specific individuals and stakeholders within HRSD.

3. Project Manual (Contract Requirements, Technical Specifications and Construction Drawings)

    a. The FIRM should prepare the Project Manual in accordance with this document and all state and local regulatory requirements. The Project Manual should generally be organized as follows:

        - Volume 1: Construction Contract Requirements and Technical Specifications
        - Volume 2: Construction Drawings
        - Volume 3: Other documents as required

    b. The documents used for regulatory approval and for construction bidding must be sealed and signed by a Professional Engineer or Architect licensed in the Commonwealth of Virginia.

    c. The type of media and method used for the distribution of the Project Manual shall be agreed upon by HRSD and the FIRM prior to finalization of the design documents.

    d. Specific requirements for the technical aspects of the Project Manual are described further in this document and will be included in the Professional Services Agreement.

    e. Project and construction cost estimates during plan development shall be as described above in Paragraph E.1.b. of this section.

F. <u>Common Historical Issues in the Design and Construction Phase</u> - HRSD has routinely encountered a number of recurring issues in both the design and construction phases of projects. Some of these relate to HRSD preferences that may differ from the FIRM's or industry's normal practices. These are summarized below by design and construction phase.

1. Design Phase

    a. Specification sections were included in the Bid Documents that are not applicable to the specific project.

    b. Plans and specifications were not well coordinated.

    c. The general intent is that existing HRSD drawings are to be reviewed and all pertinent information included on current project drawings so that these drawings represent the complete picture of the HRSD facility in the areas covered.

    d. Suggested sequences of construction to ensure maintenance of plant operations (MOPO), pipelines and pumping stations were not prepared or carefully considered.

e. Technical specifications were not coordinated with HRSD standard front-end documents. Do not repeat in the technical specifications items that are covered in the front-end documents.

f. A consistent format (font, page numbering, paragraph numbering, etc.) was not used throughout the technical specifications.

g. Existing field conditions were not verified at final design stage, resulting in conflicts.

h. Location of piping and appurtenances such as air release valves and isolation valves in busy intersections needs to be considered for maintenance and operation access.

i. Access for sampling or maintenance of equipment needs to be considered at treatment plants, pump stations, covered tanks and other facilities.

j. Lack of consideration of how the project will negatively impact the public (noise, odors, access, etc.)

2. Construction Phase

a. FIRM's submittal reviewers were not carefully checking that Contractor submittals were in full compliance with the Bid Documents, and the approved products and materials do not result in conflicts with other aspects of the physical space or other aspects of the Contract Documents.

b. Field personnel (FIRM's representative) did not have a copy of nor were familiar with plans, specifications and approved shop drawings / submittals.

c. Field personnel did not check materials received against approved shop drawings / submittals.

d. Field personnel used personal experience, not plans and specifications, when considering changes, answering questions, etc.

e. Field personnel relied on Locality / VDOT or other agency inspectors for contract item compliance when either the locality or VDOT was administering the construction contract that included impacts on HRSD facilities.

f. Field personnel relied on Contractor's record drawing keeping and failed to closely monitor progress and field changes. Field personnel should keep their own record drawing information and frequently review Contractor's record drawings.

g. FIRM failed to prepare independent cost estimates for use in verifying/negotiating changes with Contractor.

h. Field personnel were unaware of special features for the project. Design personnel should brief field personnel on special features and participate in startup to ensure compliance with the specifications.

i. Field and design personnel did not receive copies of all change documents, i.e., addenda, change orders, field orders, work change directives, etc.

j. Consideration was not given to final site restoration including work best performed by certified landscape contractors.

k. Field personnel were not monitoring, documenting nor enforcing when the Contractor was outside of rights of way and easements that he was limited to work within.

l. Field personnel were not monitoring, documenting nor enforcing when the Contractor was violating locality maintenance of traffic restrictions.

G. Use of Autonomous Vehicles (AVs)

Due to potential issues with the use of prohibited airspace, privacy concerns, the changing regulatory environment and the risk of injury and damages that could result from the use of AVs, HRSD requires that the use of AVs must comply with all relevant regulations, insurance requirements and policies. The use of AVs should be limited to circumstances when the AV provides HRSD with a financial, safety or functionality benefit over other reasonably available options. When the use of the AV will involve a Consultant, Contractor, or other individual, written permission from the HRSD Department Director and the HRSD General Manager will be required. The request submitted must clearly state the need and benefit afforded by using the AV, the name of the individual controlling the AV and insurance coverages. The request should include the Remote Pilot Certification number of the responsible individual controlling UAS (Unmanned Aircraft Systems) and should note that they will fully meet all federal, state, and local regulations relating to the use of AVs.

End of Section

Section 2 – Architectural and Landscaping Design and Review Process

A. Introduction – This section serves to provide information and guidelines for architectural and aesthetic features to be incorporated into highly visible HRSD projects in the communities. There is a need for high level of review and buy-in at early stages of concept development for all vertical structures that HRSD will construct in the communities that we serve. HRSD's Architectural Review Committee (ARC) will provide direction to the project team and FIRM (design engineers and architects) at the earliest possible stage to help ensure our designers, architects and staff verify the proper land requirements and secure stakeholder buy-in for both form and function of these facilities such that these facilities can be efficiently brought to completion. Attached to this section are guidelines, forms, and templates to assist the FIRM and project team with incorporating architectural and landscaping concepts.

B. HRSD Architectural Review Committee (ARC) - The following steps are to be followed for vertical construction projects:

1. FIRM to research the current zoning, and building styles (residential, public, business) in the surrounding neighborhoods or areas within of the proposed construction site. This research should influence the design of the structure in a way that will allow it to blend in with the surrounding community.

2. FIRM to review the current HRSD Pump Station Architectural Guidelines (Attachment A) and Aesthetics Considerations Log (Attachment B) to this section for best fit and desired styles/considerations to blend into the surrounding areas where the facility is to be constructed or renovated.

3. FIRM to provide varying conceptual architectural treatment options/styles (minimum of three for new construction and two for beautification initiatives) along with Opinion of Probable Construction Costs (OPCC) at AACE Class 4 estimate {as defined in Section 5 - Capital Project Cost, Schedule and Risk Reporting} for each option to the HRSD Project Manager at the draft Preliminary Engineering Report (PER) stage for the ARC's review. These architectural renderings shall be at a level of development to envision how the structure would blend into the surrounding area, what the facility would look like from all sides, and to include all known above ground external appurtenances, including but not limited to: fixtures, yard piping, generators, bypass pumps, odor control system, emergency connections and panels.

4. FIRM to provide conceptual landscape design appropriate to the style of the new or renovated structure or blending with the surrounding community. HRSD's preference is to use evergreen, low maintenance and native, to the area (Hampton Roads), vegetation whenever possible and if compatable with the locality's landscaping requirements. The FIRM to research the area of planting (soil type, flood zone-type, dry soils) for proper selection and successful planting/growth. Once the landscaping design is approved, the

FIRM shall also provide a Landscaping Planting Plan. An example is provided in Attachment E to this section.

5. FIRM to provide conceptual fencing design appropriate to the style of the new or renovated structure or blending with the surrounding community. HRSD's preference is to not utilize hardscape fencing on a property if landscaping can be utilized to the same affect. Fencing may be used if deemed necessary for safety of the general or motoring public or HRSD's infrastructure. If hardscape fencing has been deemed mandatory, HRSD's preference is not to use privacy or panel fencing completely obscuring view.

6. HRSD Project Manager to coordinate with their Chief to receive early feedback and concurrence on the architectural and landscaping concepts to be presented to the ARC.

7. HRSD Project Manager will submit the architectural/ landscaping/ fencing rendering options to the HRSD ARC for comment and direction. This committee is generally comprised of the following HRSD members: Deputy General Manager, Director of Communications, and the department director for whom the facility is being constructed.

8. The HRSD Project Manager will schedule a meeting with the ARC within approximately two (2) weeks of submittal of the renderings to discuss their comments and guidance for moving forward. Title the appointment/meeting: Architectural Review Committee Meeting – PROJECT or INITIATIVE NAME.

   a. During this meeting the HRSD Project Manager should provide:

      i. A brief and high-level review of the project (why is this initiative needed, how old is the existing infrastructure or the reason for the new structure, current budget for this CIP/Beautification Initiative, where we are in the process to-date as well as any external architectural steps taken to this point such as meetings with the city/county to obtain requirements).
      ii. Provide a 'live' Google Earth street view 'walk through' of the surrounding area and buildings - allowing the ARC to view the existing structures in the community for comparison.
      iii. Provide 2 or 3 preliminary design rendering options developed by the architectural/design firm for the HRSD ARC to consider as described above. The ARC will decide, if these renderings meet their desired vision and will provide additional direction.

   b. The FIRM (and/or the Architect) may be allowed to attend a portion of this meeting to hear direct comments from the ARC, after ARC internal discussion.

   c. HRSD Project Manager to inquire if the ARC believes there is a need for a full meeting to discuss this project or if the ARC can submit their comments via an email discussion. The ARC has opted for this email response method for past beautification initiatives or cases where the ARC is satisfied with the orginially presented and discussed concept.

d. If a response is required by a certain date, please note that date for the ARC.

9. The FIRM shall modify the renderings according to direction given by the ARC and prepare a sample board of color and material selections (if desired by the ARC) and resubmit to the ARC for final concurrence within two (2) weeks of the first meeting with the ARC.

10. The accepted architectural concept by the ARC will be incorporated into the final PER by the FIRM.

11. The FIRM shall base their scope of services and fee proposal for the design phase upon the final PER recommendations.

12. Depending on the locality's review and approval process regarding architectural style and landscaping, the FIRM will need to accommodate within their proposed completion schedule for additional submittals and reviews by governing bodies.

13. FIRM shall submit to the Project Manager additions to the Aesthetics Considerations Log, using the template provided in Attachment B, not already captured.

14. HRSD Project Manager shall ensure the approved safety and address signage are ordered and installed on the structure, as directed by the ARC.

C. Attachments – the following information is provided for guideance:

1. Attachment A - HRSD Facilities Architectural Guidelines.
2. Attachment B - Aesthetics Consideration Log
3. Attachment C - Address Sign Specification
4. Attachment D - Safety Sign Specification for Buildings
5. Attachment E - Landscaping Planting Plan Sample

End of Section

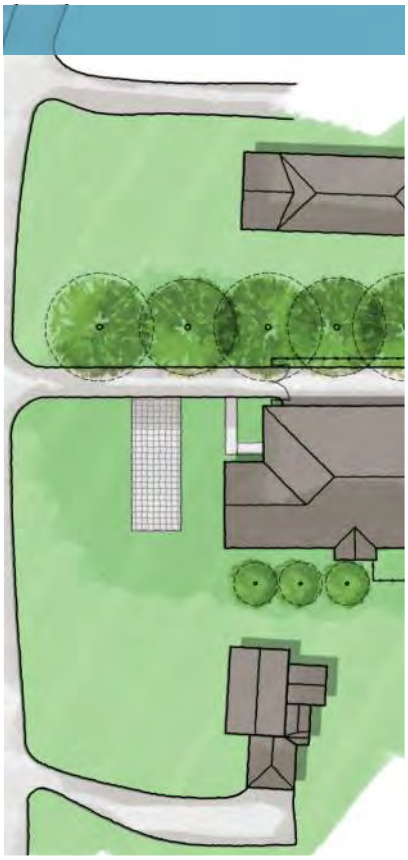

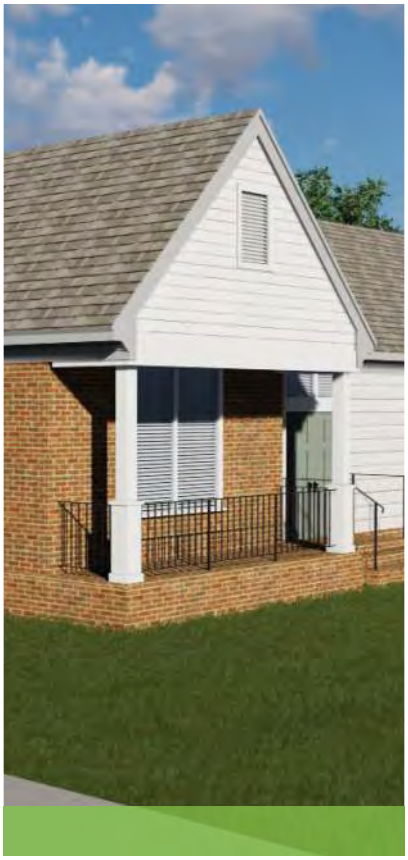

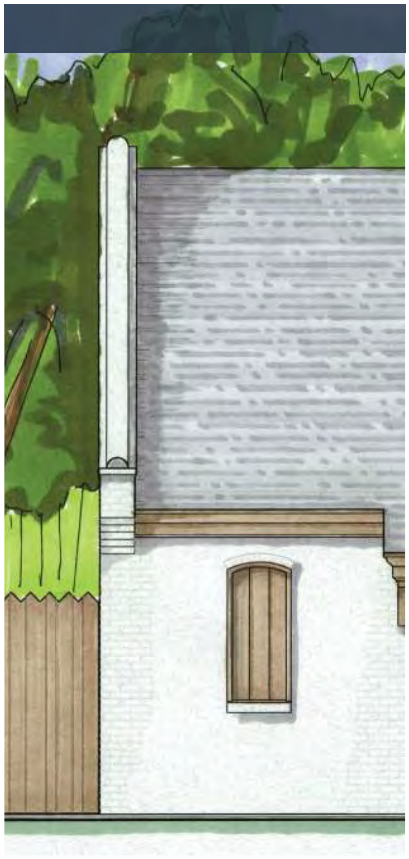

HAMPTON ROADS SANITATION DISTRICT

FACILITIES ARCHITECTURAL GUIDELINES

~~JUNE 30, 2016~~

REVISED FEBRUARY 13, 2023

HRSD

GuernseyTingle

ARCHITECTURE | INTERIORS | PLANNING

TABLE OF CONTENTS

I ARCHITECTURAL GUIDELINES

1 BACKGROUND
1 INTENT OF GUIDELINES
2 ENVIRONMENTAL JUSTICE
2 RENOVATION AND ADDITIONS
2 CONFORMANCE WITH LOCAL DESIGN GUIDELINES
3 PRE-DESIGN CONSIDERATIONS
4 SITE DESIGN
6 BUILDING DESIGN // GENERAL
7 BUILDING DESIGN // PRIMARY ELEMENTS
10 BUILDING DESIGN // OTHER ELEMENTS
13 BUILDING DESIGN // FLOOD MITIGATION

II EXHIBITS

17 EXHIBITS // DRAWINGS
30 EXHIBITS // CASE STUDIES
43 EXHIBITS // EXAMPLES

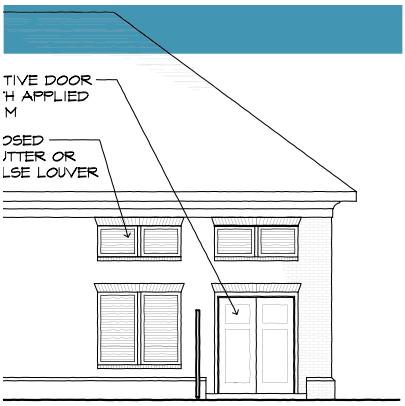

ARCHITECTURAL GUIDELINES

1 BACKGROUND
1 INTENT OF GUIDELINES
2 ENVIRONMENTAL JUSTICE
2 RENOVATIONS AND ADDITIONS
2 CONFORMANCE WITH LOCAL DESIGN GUIDELINES
3 PRE-DESIGN CONSIDERATIONS
Regional/Area Study
Conceptual Design

SITE DESIGN
4 Site Layout and Views
4 Building Setbacks
4 Driveways and Hardscape
5 Fencing
5 Landscaping

BUILDING DESIGN // GENERAL
6 Building Massing
6 Building Facade Design

BUILDING DESIGN // PRIMARY ELEMENTS
7 Exterior Wall Cladding
7 Roofing
8 Doors and Windows
9 Trim and Cornices
9 Louvers

BUILDING DESIGN // OTHER ELEMENTS
10 Emergency Generators and Stand-by Pumps
10 Monorails
10 Odor Control
10 Noise Pollution Control
11 Signage
11 Wastewater Storage Tanks
11 Other Equipment
11 Exhaust Elements
12 Exterior Lighting and Security Cameras

BUILDING DESIGN // FLOOD MITIGATION
13 Equipment or Structure Elevation
13 Dry Floodproofing
14 Floodwalls or Levees

BACKGROUND

Originally incorporated into the 2016 updates to the *HRSD Design and Construction Standards,* the Pump Station Design Guidelines were generated to address both new and renovated pump stations. In 2022, HRSD launched an update to include other infrastructure and support buildings, such as offline storage facilities (OLSF's) and pressure reducing stations (PRS's). Other updates have also been incorporated to address feedback and experience from previous projects.

These Guidelines shall be used by architects/engineers in the design of new Hampton Roads Sanitation District (HRSD) support facilities (pump stations, pressuring reducing stations, and offline storage facilities). They shall also be referenced when designing additions, renovations, and modifications to existing support facilities.

The Guidelines shall supplement the engineering, technical, and operational standards and requirements, including the current edition of the *HRSD Design and Construction Standards,* as directed by HRSD. Intended to be a "living document," these guidelines will be updated periodically by HRSD to address new materials, new building systems, new technology, and refinement of aesthetic design standards.

INTENT OF GUIDELINES

The Guidelines are intended to direct the aesthetic design of support facilities. Facility design should strive to achieve the following principles:

- Overall site and building design should respect the community in which the facility is located.
- Architecture should blend into the local context of the site and community where feasible. If the project site is remote or industrial, the aesthetic may be more utilitarian. A more urban or developed location requires more attention to the architectural style and composition.
- Building façade should show quality detailing and finely tuned proportions.
- Materials should be selected for durability and low maintenance.
- Building design should balance aesthetic form and operational function. Functionality drives the design of the facilities, but design can properly address unique conditions.

ENVIRONMENTAL JUSTICE

HRSD's facilities should implement the use of quality construction and materials. However, many facilities are being retrofitted into disinvested or distressed urban environments. In these cases, measures to alleviate the disparity with surrounding properties include massing that uses smaller-scale components, low-profile colors and landscaping, and similar materials to neighboring properties.

Additionally, climate resistance and sustainability are part of environmental justice ideology. Sustainable and environmentally sensitive materials and methods of construction should be utilized in all HRSD construction projects. Low-impact landscaping, long-life materials, and pervious pavers to mitigate stormwater are all examples of sustainable practices.

RENOVATIONS AND ADDITIONS

Renovations and additions to existing facilities should be harmonious with the existing facility in massing, materials, and character. Otherwise, if the entire facility is to be retrofitted/updated, the Architectural Guidelines should be followed as if it were a new construction.

CONFORMANCE WITH LOCAL DESIGN GUIDELINES

Designs shall meet the guidelines of the locality, including design standards, zoning ordinance regulations, overlay districts, and community character corridors. Designs shall also meet any guidelines adopted by the local community. If local design guidelines conflict with these Architectural Guidelines, the local guidelines shall take precedent.

PRE-DESIGN CONSIDERATIONS

Regional/Area Study

- Prior to commencement of design, the immediate region should be studied to determine characteristics of the surrounding area and local vernacular.
- If a prevailing style is apparent from the Area Study, consider characteristics and materials that will complement the local existing architecture.
- Consult local ordinances and guidelines to determine if there are any special regulations and restrictions. Examples beyond typical setbacks and regulations include height restrictions, fencing restrictions, and restrictions for site access such as driveways.
- In undeveloped or rural areas that may be developed in the future, a locality contact may be able to provide comprehensive plans, master plans, or other information on pending developments that could impact the design.

Conceptual Design

- Exterior elevations and 3D architectural renderings should include human figures for scale.
- When laying out the site and the building, a conceptual site plan can help determine the placement of above ground equipment, both building-mounted and freestanding. This includes, but is not limited to, generators, piping, bypass valves, vaults, meters and panels, odor control systems, control panels, emergency connections, and electrical transformers.
- A conceptual site plan, in conjunction with renderings, can aid in planning the proper screening and appropriate treatment of these exterior appurtenances.

SITE DESIGN

Site Layout and Views

- General site characteristics of neighboring properties should be considered in facility design.
- Consider views from adjacent streets, public spaces, and neighboring buildings and lots.
- Particular attention should be paid to sites located near cultural landmarks, significant buildings, and public spaces.
- Buildings should be sited to screen any visible electrical, plumbing, and mechanical items from primary views.
- If land is needed for future expansion, consideration should be given to interim use of this land as a park, greenspace, or other public/community use.
- Where possible, locate emergency pump connections away from primary views.

Building Setbacks

- Building setbacks shall follow local zoning requirements, and also reflect the setback already established by buildings on adjacent properties.
- Depending on scale and mass, it may be appropriate to site facilities further back than adjacent buildings to avoid overwhelming the adjacent structures.

Driveways and Hardscape

- Where appropriate, consider pervious pavement systems, in keeping with the environmental focus of HRSD.
- If secondary or emergency drives are required, consider the use of pervious paver or grass paver systems to visually reduce the amount of hardscape and paving.
- Concrete or asphalt paving should be used where heavy equipment or vehicle loading is expected.
- While the desire is to minimize paved areas, this should be balanced with the practicality of maintaining landscaping and green areas. For example, a narrow green space between the building foundation and the driveway will be challenging to maintain.
- Width of driveways should be the minimum needed for access by HRSD vehicles, and consistent with neighboring properties when possible. Site paving should be the minimum needed to maintain appropriate access for maintenance and operations. Consider the weight limits, specific widths, and turning radii for specialized vehicles that HRSD may need for particular sites.
- Edge treatment should be provided at all access drives visible to the public.
- Consider the use of hardscape for conformity with neighboring sites. Sidewalks, driveways, and walkways may be required for the building to blend with adjacent properties.

Fencing

- Fencing is the preferred method of securing the site, but a combination of fencing and landscaping should be used for visual screening if possible.
- Highly durable, low-maintenance materials such as powder-coated aluminum, closed-cell PVC, and fiber cement should be used for screen fencing. Some materials are available pre-finished or with solid thru-color for enhanced durability. The manufacturer should be consulted on color-matching if plugs or fasteners are required for installation of these materials.
- Security fencing should be decorative black aluminum fencing, 6' high.
- Consider the project location when determining fencing location and materials. In a rural setting, fencing may be needed to prevent public vehicular access, but pedestrian access prevention is not necessary. In some neighborhoods, fencing may be harmonious with adjacent properties.
- In general, fencing should be consistent with the character of surrounding properties.
- When landscaping is insufficient for screening unsightly elements of the architecture or site (louvers, exhaust, piping, monorail, etc.), screen fencing may be appropriate. However, elements that are low to the ground (manholes, concrete pad) or other less visually impactful elements may be left outside of fencing.
- When possible, fencing the buildings and other elements as necessary is preferable to fencing the entire site.
- Fencing should expose at least the front façade of the building – more if possible within design constraints.

Landscaping

- Landscaping should be used in lieu of, or in combination with, fencing for visual screening of site elements.
- Existing vegetation should be considered in site design as it can provide screening and visual softening of facilities.
- Often, surrounding sites do not have fencing; therefore, utilizing fencing is disharmonious with the local character and landscaping may be a suitable alternative for screening. Evergreen shrubbery is a recommended alternate to fencing where possible.
- Design landscaping that is sustainable, low maintenance, and drought resistant. Utilize native plants where practical.
- Decorative landscaping should be minimized, but may be needed as a tool for shielding unsightly facades or softening visible foundations on larger buildings.

BUILDING DESIGN // GENERAL

Building Massing

- In general, buildings should be designed to a scale and style that is sympathetic to residential structures, or sympathetic to adjacent contextual buildings.
- Smaller facilities should be designed to appear like traditional "outbuildings", with scale that is appropriate for those buildings.
- Avoid large monolithic walls and roof surfaces. Break larger masses down into smaller elements with plan offsets, gables, roof breaks, etc. Use porches and other residential elements where needed to soften larger mases.
- Large facilities in small-scale neighborhoods should be designed with smaller elements reflective of the neighboring buildings.
- Buildings should be carefully articulated with functional doors and louvers, placed in an organized method that is appropriate for architectural balance on the elevations, while supporting the functional requirements of the facility. Avoid haphazard placement of louvers, openings, and other elements on walls.

Building Façade Design

- Several factors may influence the overall height of a building: a high capacity pump station may require greater height for equipment, or a building location in a flood plain may require the floor to be raised significantly above grade. A variety of techniques should be used to achieve good proportions on the building façades.
- To avoid water infiltration, the first floor slab elevation shall meet the requirements of the most current edition of Section 10, Flood Elevation Requirements, of the *HRSD Design and Construction Standards*. Therefore, if the floor elevation will be raised, consideration should be given to how this will impact the building elevation's proportions.
- For taller buildings, consider simulating a half story above the first floor. Alternatively, a half story of false windows at grade can create an "English basement" aesthetic.
- A water table (a traditional masonry projection at the foundation line) of up to 4'-0" above grade can be utilized to break down the overall height of a building, regardless of the actual floor level.
- Head and sill heights, widths, and overall spacing of doors, windows, louvers, and other elements should be coordinated and provide visual balance.

BUILDING DESIGN // PRIMARY ELEMENTS

Exterior Wall Cladding

- Primary exterior wall finish shall be brick, in color and size to blend with adjacent structures. Where no structures are in the vicinity, brick should be standard size (6 courses per 16 vertical inches) or oversize (5 courses per 16 vertical inches).
- Where no structures are in the vicinity, brick should be a Tidewater Virginia traditional red blend, with a full range to include a percentage of flashed bricks.
- Mortar shall be straw or natural color. Mortar joints shall be grapevine or concave.
- Optional exterior cladding should be fiber cement siding (Hardiplank or equal), weatherboards, smooth finish with 6" to 7" exposure. Fiber cement siding should be factory finished or solid thru-color in a shade to blend with neighboring structures. The manufacturer should be consulted on color-matching after installation if plugs or fasteners are required to install these materials.
- If appropriate to the context of the site, other styles of siding (board-and-batten, shingles, etc.) may be used. Material and finish shall be the same as described above.

Roofing

- Sloped roofs (pitch 8:12 or greater) are strongly recommended, unless a different pitch is needed for compatibility with surrounding structures. In some instances, a lower pitch may be necessary to comply with local height restrictions.
- Sloped roofing materials shall be either standing seam metal or architectural shingles.
- Standing seam metal roofing colors should blend with adjacent structures. Where no structures are in the vicinity, the color should be medium or dark bronze. Roofing should have an 18" maximum exposure on panel size.
- Architectural shingles should be 40-year warranty asphalt-fiberglass shingles, with a medium to dark color to blend with adjacent structures. Where no structures are in the vicinity, the color should be slate blend, dark gray blend, or weathered wood blend.
- Gutters and downspouts are generally discouraged. However, in some instances, they may be necessary for adequate roof drainage and/or to prevent maintenance issues.
- Where ground gutters are needed, provide materials that blend with the building and landscaping.
- Fall protection anchors should be included in roof design.

Doors and Windows

- Depending on the needs of the pump station, functional doors will be located on various faces of the building. When they are highly visible it may be appropriate to clad them with an architectural finish. For less visible locations, painting doors to match the exterior siding will allow them to recede from view.
- Decorative doors could be located at the front of buildings to create a focal point for the building.
- Decorative windows & false widows should be used to break down mass of larger blank walls, and provide articulation to facades. Unless other window styles are needed to blend with adjacent structures, windows should be double-hung in appearance, with a width-to-height proportion in the range of 1:2 to 1:2.3. In general, primary windows should not be smaller than 2'-8" x 6'-2". Larger windows may be needed for larger scale buildings. Half story windows above should match the size of one sash of the double hung windows below.
- When windows are needed for natural light, care should be taken in areas of high vandalism. Second story windows or dormers can provide natural while mitigating security issues. When windows are added only for aesthetic reasons, glass can be blacked out and openings blocked up on the interior side.
- Brick inset windows and shuttered windows can be used to break up a blank façade. Sill and header details should match other building penetrations for visual uniformity, and sizing should fit into the overall proportions for the building. Shutters should be constructed from high durability low maintenance materials such as closed cell PVC, fiberglass, or fiber cement.

Trim and Cornices

- High durability and low maintenance materials such as closed cell PVC, fiber-cement, fiberglass, or composites should be selected for cornices, exterior trim, and columns.
- Cornices should be designed appropriately for different scaled buildings: while a small pump station may resemble an outbuilding and have only a crown moulding and short roof overhang, larger buildings will require larger cornices with multiple members.
- Use square or round porch columns with an 8″ minimum width. Avoid overly ornate columns.
- 6″ corner boards should be used at weatherboard siding.
- Handrails should be included with any stairs of more than 3 risers. Personnel entrances, porches, and other occupiable spaces should receive guardrails and handrails as required by code. Decorative, non-occupiable porch rails should be at an appropriate height, but not above 36″, unless mandated by code.

Louvers

- Functional louvers have a very large impact on the exterior of a facility; therefore, their design must be carefully coordinated.
- All visible louvers should receive a high quality fluoropolymer finish and color to match other exterior elements.
- Where possible, the top of louvers should align with the top of adjacent windows, doors, or closed shutters. The widths of louvers should also correspond to adjacent architectural items. Placement of louvers should align with the overall spacing of exterior elements.
- Locate oversized and odd louvers on the rear elevations or behind screening elements.
- Where possible, fans should be mounted on the interior with only architectural louvers on the building exterior.

BUILDING DESIGN // OTHER ELEMENTS

Emergency Generators and Stand-by Pumps

- Locate generators and pumps within an enclosed building where feasible for both visual screening and noise control.
- Large generators can drive the overall size of the building. Additional care should be taken to break up large masses of the building if this is the case.
- If enclosure of equipment is not feasible, locate generators and pumps at rear of building or at least visible side of building, away from view by the public and adjacent properties.
- Provide screening of all generators and pumps located outside enclosed buildings, using screen walls, fencing, evergreen landscaping, or combination thereof.
- Care should be taken where generators or pumps must be elevated due to flood zone requirements. In these cases, enclosure in a building may be the only way to effectively screen equipment.

Monorails

- Locate monorails on rear elevations to decrease street visibility when possible.
- When monorails will be visible, consider ways to integrate them into the architecture of the building. A monorail can be simplified to a single column and beam, or can be disguised with roofs and architectural columns.

Odor Control

- Where possible, use the building to screen odor control systems from view by locating them in alcoves or at the rear of the building. Alternatively, provide high screen fencing, walls, or landscaping to screen odor control systems from view.

Noise Pollution Control

- Locate generators, blowers, and other noise-generating equipment within an enclosed building whenever possible. If this is not possible, evaluate neighboring sites when locating equipment.
- Exterior equipment should be oriented within alcoves and/or at the least intrusive location both visually and acoustically, using the building as a sound wall. Sound attenuation blankets on the building's interior may be a secondary method of noise reduction.

Signage

- Safety signage should be placed at the personnel entrance to the building. Wherever possible, locate the personnel entrance to the side of the building to lessen the visual impact of the safety signage.
- The location and size of HRSD property signage may vary depending on context and intent of signage.
- Locate street address signage on the front façade over the front door or other prominent location.
- A project's locality may have requirements for safety signage, as well. This signage should be as minimally intrusive as possible, while still meeting the requirements of the locality. For example, if the site is surrounded by security fencing, fence-mounted placards may not need to list safety equipment requirements, as this information is listed at the personnel entrance.

Wastewater Storage Tanks

- Storage tanks by their nature are composed of a very large mass. Surface-applied materials can help break up the massing.
- Consider a water table feature to provide a base for structures. A continuous water table or use of similar materials can help integrate tanks with the building's architecture.
- Locating large tanks behind buildings, walls, or berms, can help visually mask large tanks.
- Depending on the site, using subtle or obscuring paint colors can also help tanks visually "recede" into the background.

Other Equipment

- Building-mounted or exterior panels, meters, and HVAC/mechanical equipment should be located at the rear when possible. Landscaping and/or fencing may be necessary to screen them further.
- Consult building codes and other governing ordinances for clearance requirements at electrical and other applicable equipment.
- Freestanding panels should be screened by landscaping and/or fencing.

Exhaust Elements

- Exhaust elements should be placed at the rear when possible.
- A decorative masonry chimney may be used to help to disguise a number of smaller vertical exhaust and/or venting elements.
- Avoid large exhausts on the roof.
- Consider the location of SCADA equipment and antennae. Locate these on the least visible facade possible, as screening these with tall landscaping can cause interference with signals. Note that existing landscaping may also cause interference, which could impact the location of these elements.

Exterior Lighting and Security Cameras

- Lighting design will be a combination of the function of the project and the aesthetics of the area in which the project is located. Projects should be assessed on a case-by-case basis for lighting needs. Lighting must meet the requirements of the most current edition of Section 32, Electrical and Instrumentation, of the *HRSD Design and Construction Standards*. Depending on locality lighting ordinances, Dark Sky compliant light fixtures may be required to prevent light trespass onto neighboring properties.
- For these Guidelines, "ambient lighting" refers to lighting that is used for decorative purposes, or to help a project blend in with its surroundings. Examples may include porch lighting, decorative sconces, or decorative street lights. For ambient lighting, photocell sensors are suggested to utilize exterior lighting from dusk to dawn.
- "Security lighting" as used here defines lighting that is brighter than ambient lighting that is meant to illuminate an area to deter vandalism, trespassing, and theft. For security lighting, motion sensors may be appropriate to control lighting in high traffic areas or urban areas.
- "Safety lighting" as referenced in these Guidelines refers to utility lighting for HRSD workers to gain access for work in a safe, well-lit environment when necessary. Consider manual switching for these fixtures to minimize interruption in service during use.
- New and replacement fixtures should be LED lamp type fixtures. The color rendering index (CRI) of the lamp output should match the context of other fixtures in the vicinity. Ambient lighting will generally have a warmer CRI than security and safety lighting.
- If pole mounted lighting is required on the site, care should be given to placement, finish, and height of poles. Light poles should be factory finished aluminum and no more than 12 feet above grade. Style and color should match the building scheme, with the color usually dark bronze or black.
- Use full cutoff light fixtures to minimize spillover of light to adjacent properties. Locality requirements should also be consulted, as they will also stipulate illumination guidelines to minimize light pollution.
- If security cameras are needed, placement should be discrete and screened from view if possible.

BUILDING DESIGN // FLOOD MITIGATION

Due to rising sea level, water infiltration prevention has become a priority in construction. Construction must meet the requirements of the most current edition of Section 10, Flood Elevation Requirements, of the *HRSD Design and Construction Standards*.

New construction allows the flexibility of raising the entire building above the flood plain. However, this often means that new buildings may be significantly taller than existing neighboring buildings. Care should be taken to break up tall vertical masses to help them relate to the surrounding architecture.

Renovations and additions to existing buildings pose a different challenge, in that the exterior walls must be floodproofed to prevent water infiltration. Equipment that cannot be accommodated within existing structures must be located on the exterior.

In either instance, mitigation measures should be integral to the facility's design wherever possible. The mitigation methods that most commonly impact the architectural and site design are discussed below.

Equipment or Structure Elevation

- If a structure's floor elevation will be significantly raised due to the flood plain, the use of a water table and/or a change in materials should be used to help break up the facade's vertical mass.
- When equipment must be elevated due to flood zone requirements and cannot be incorporated into a structure's interior, measures to screen the equipment from view must be taken. Locate equipment using the building's massing as a screen. Otherwise, use landscaping or fencing as a screen.

Dry Floodproofing

- Dry floodproofing methodology involves enclosing a structure's foundation to protect it from water infiltration. This includes covering building openings within the flood plain via either permanent or temporary measures.
- Permanent measures include window wells or walls that enclose the structure.
- Temporary measures include sliding doors or gates, lift-out panels, and panels with buttressing systems, to allow passage through doors during non-flooding.
- Both permanent and temporary measures should be integral to the facility design and should not appear to be extraneous. Due to their specialized nature, this may involve using gate or panel materials on the building's exterior.

Floodwalls or Levees

- Floodwalls and levees, like dry floodproofing, serve to prevent water infiltration into a site and/or a structure. They can be implemented with new construction, and lessen the impact of operations for existing facilities. When possible, use like materials and details for the building and the floodwalls or levees for an integral and cohesive appearance.
- Earthen berms can be used to lessen the height and visual impact of floodwalls or levees, and should be considered if site permits.

EXHIBITS

EXHIBITS // DRAWINGS

17 General Building Proportions
20 Chimney Elevation
21 Window & Closed Shutter
22 Architectural Louver & Dormers
23 Doors
25 Cornice
27 Porches
28 Fences
29 Signage

EXHIBITS // CASE STUDIES

30 Big Bethel Road Pressure Reducing Station
32 Atlantic Pressure Reducing Station
34 Newmarket Creek Pump Station
36 Providence Road Pressure Reducing Station
41 Shipps Corner Pressure Reducing Station
42 Urbanna Pump Station

EXHIBITS

EXHIBITS // EXAMPLES

43 Arctic Avenue Pump Station
44 East Beach Pump Station
45 Locust Valley Pump Station
46 Currituck County Waterworks & James City County Pump Station
47 Stonehouse Pump Station
48 Mathews Pump Station
49 Elbow Road Pressure Reducing Station
50 Washington Street Pump Station
51 Monroe Place Pump Station
52 Victoria Boulevard Pump Station
53 Bridge Street Pump Station
54 25th Street Pump Station
55 Tabb Pressure Reducing Station & Offline Storage Facility
56 Floodproofing Measures - Elevated Equipment
57 Floodproofing Measures - Elevated Buildings
58 Floodproofing Measures - Dry Floodproofing; Integral Flood Walls/Levees

EXHIBITS // DRAWINGS

General Building Proportions

Small Facilities

The following example gives proportions and detail elements appropriate for small buildings.

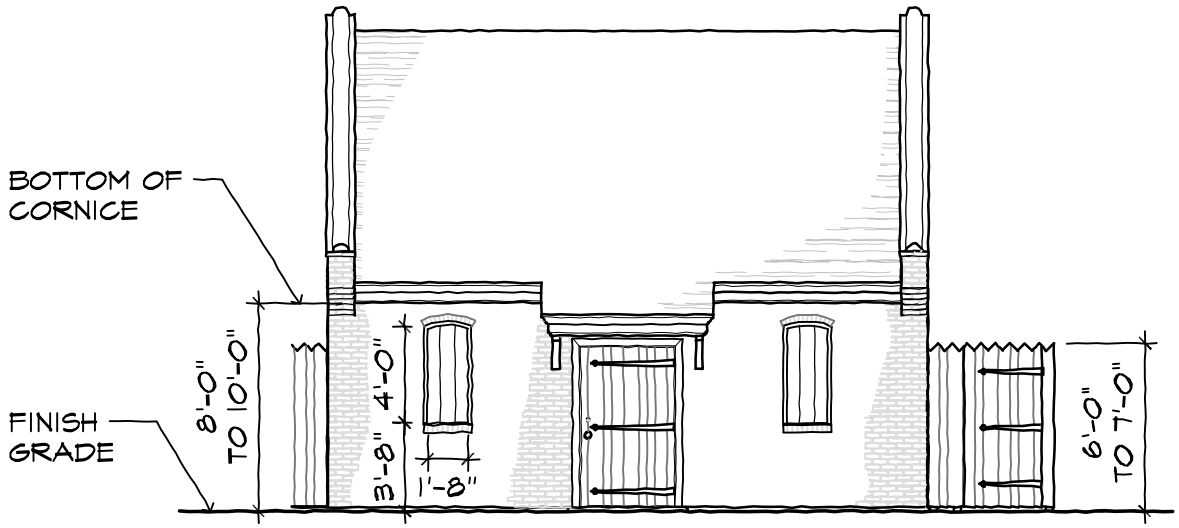

ELEVATION

EXHIBITS // DRAWINGS

General Building Proportions

Large Facilities

For larger building, the following elevation provides recommendations for proportions, roof-lines, cornices, window and door detailing.

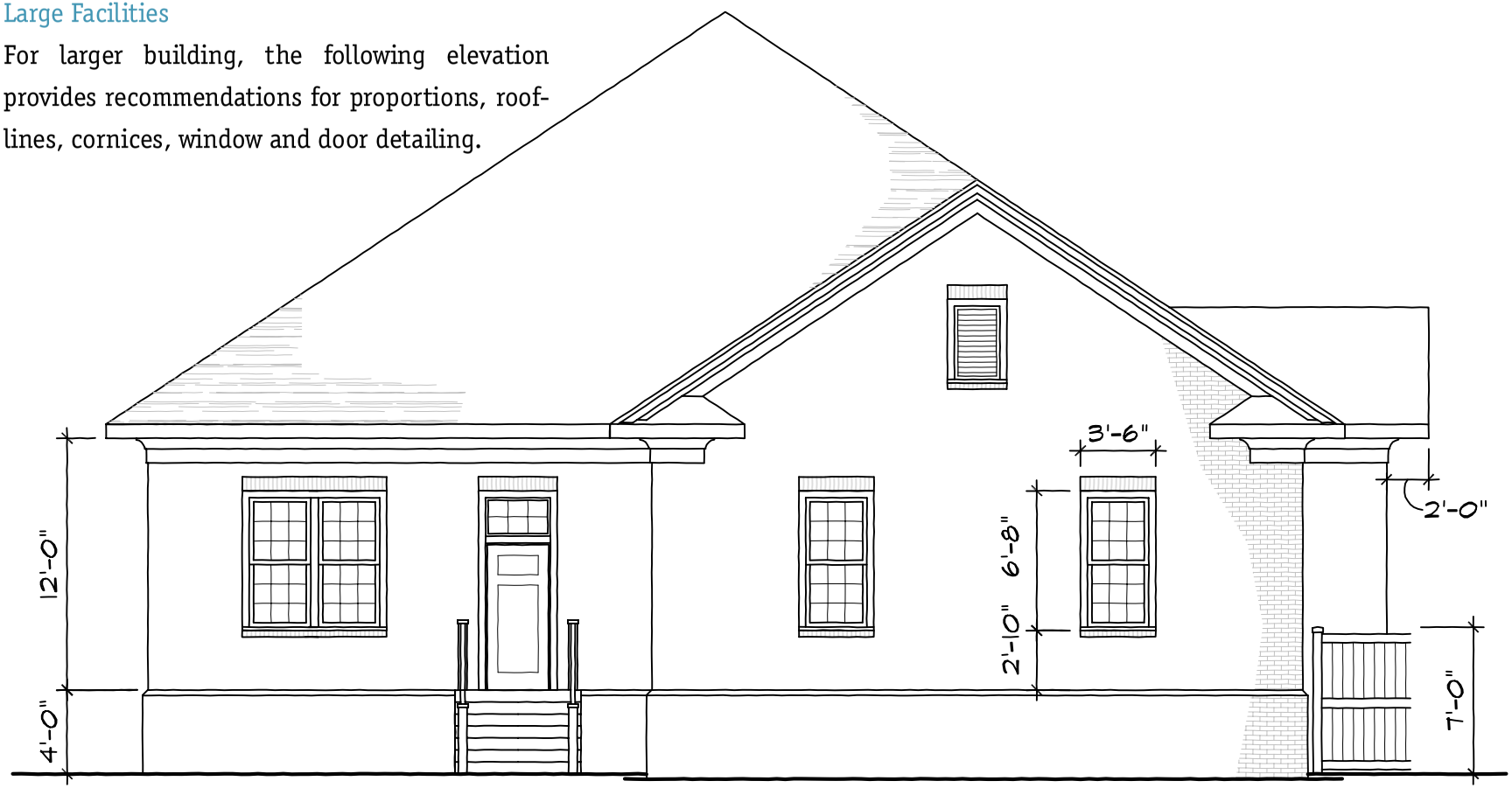

ELEVATION

EXHIBITS // DRAWINGS

General Building Proportions

Large Facilities

This elevation shows an example of proportions appropriate for a large building highlighting the use of faux brick windows, louver and door locations to create a visual grid. The placement of these elements helps to create a visual hierarchy and break up long spans of solid facades.

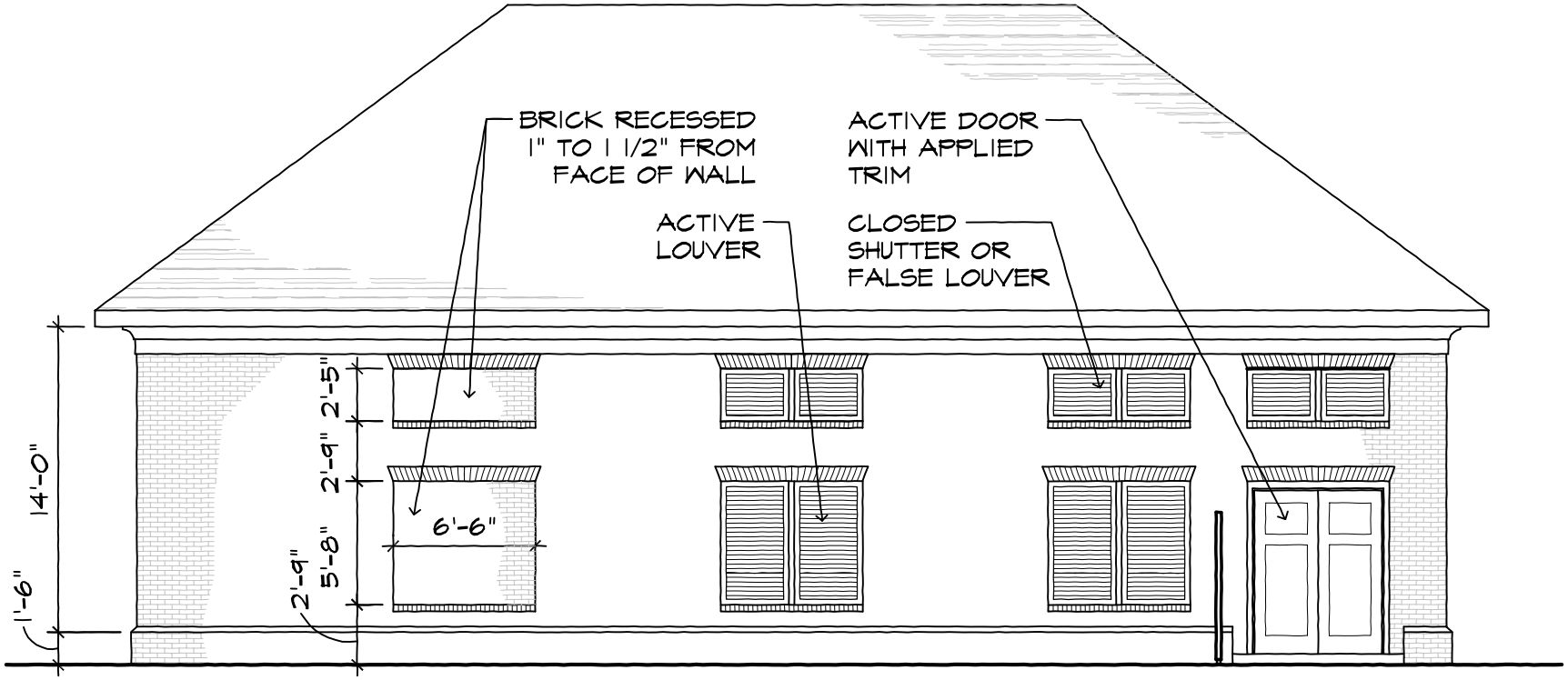

ELEVATION

EXHIBITS // DRAWINGS

Chimney Elevation

If vertical venting is required, a chimney can be used to disguise the vent space. Chimneys should maintain a high level of architectural detail and be in proportion to the overall structure.

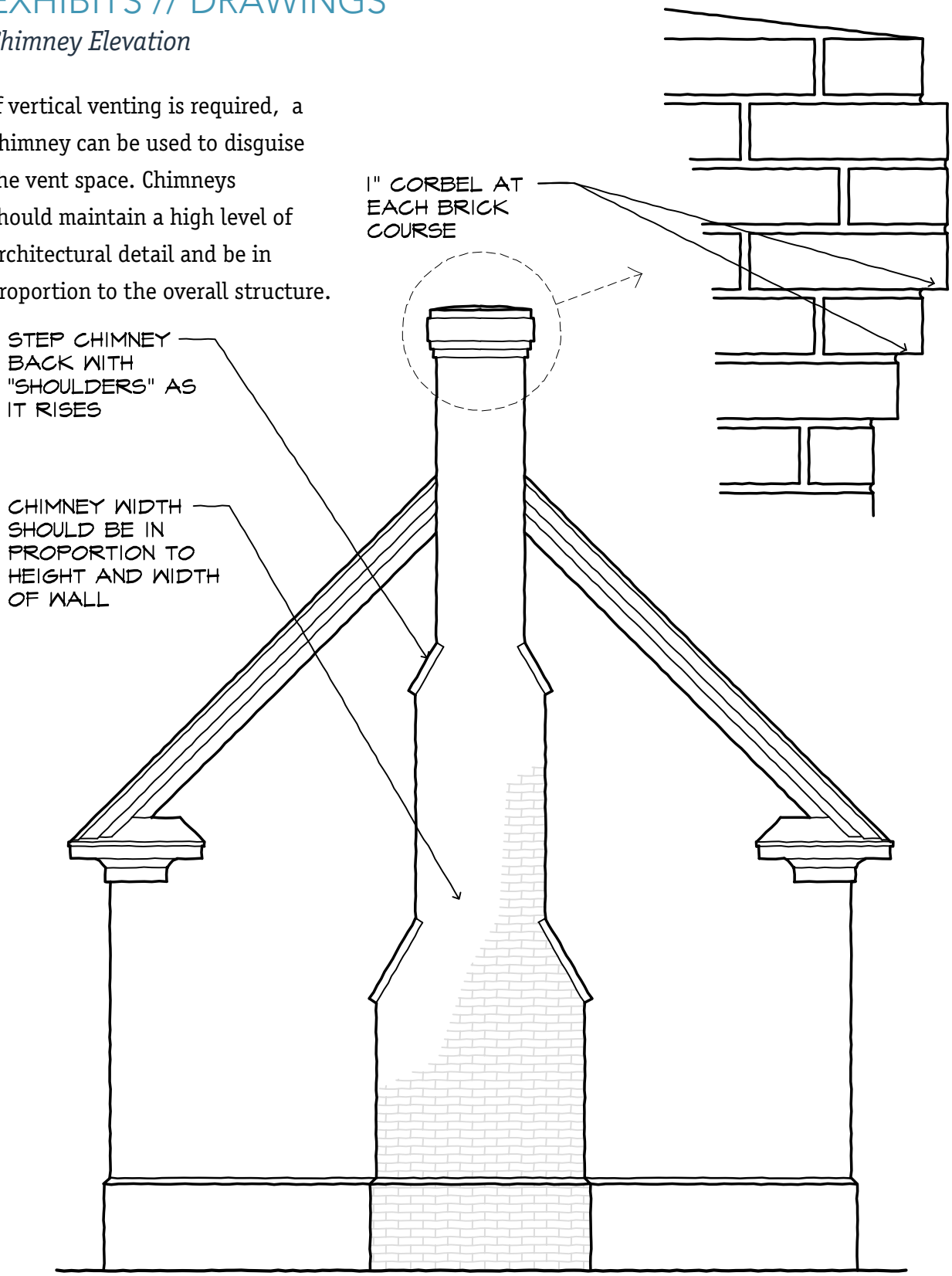

CHIMNEY ELEVATION

EXHIBITS // DRAWINGS

Window & Closed Shutter

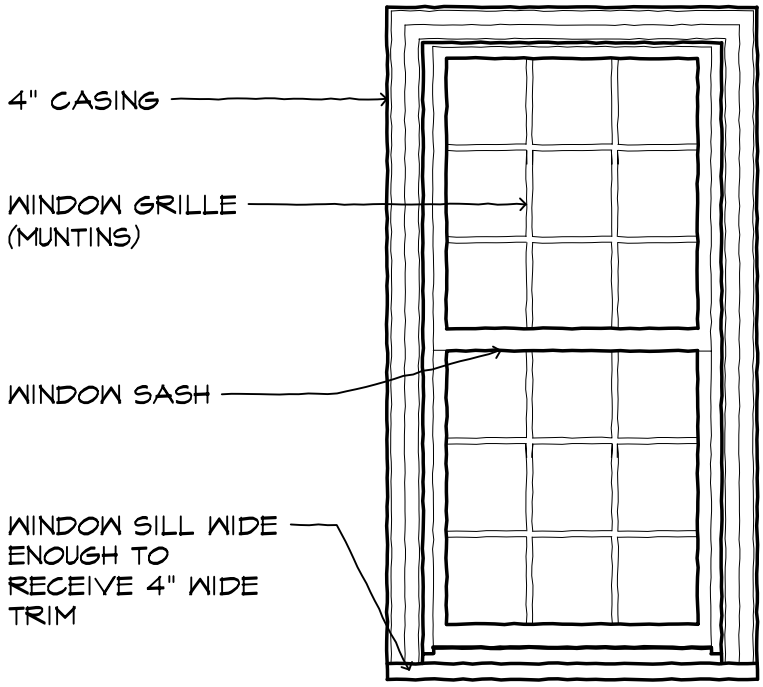

Window elevation

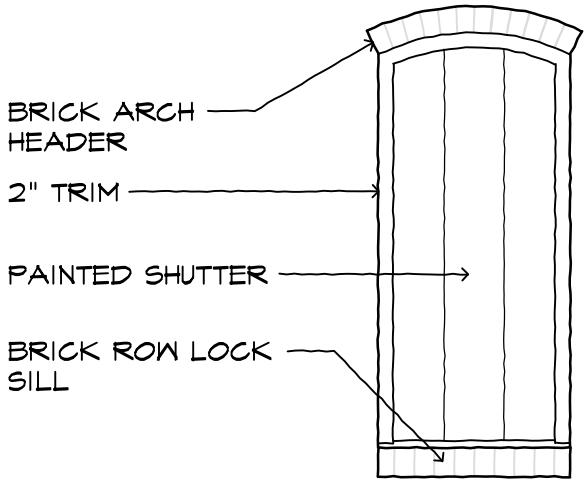

SHUTTER AND TRIM SHALL BE PLACED BEHIND FACE OF WALL BRICK.

Closed shutter elevation

EXHIBITS // DRAWINGS

Architectural Louver & Dormers

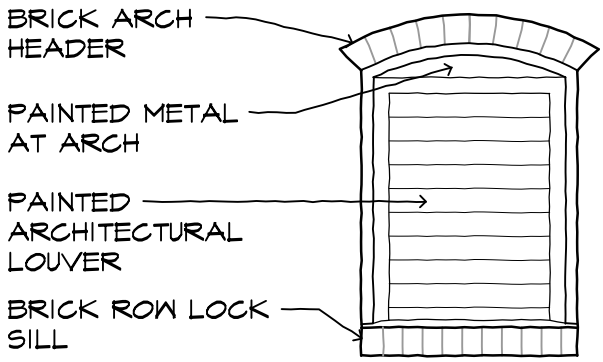

Architectural louver

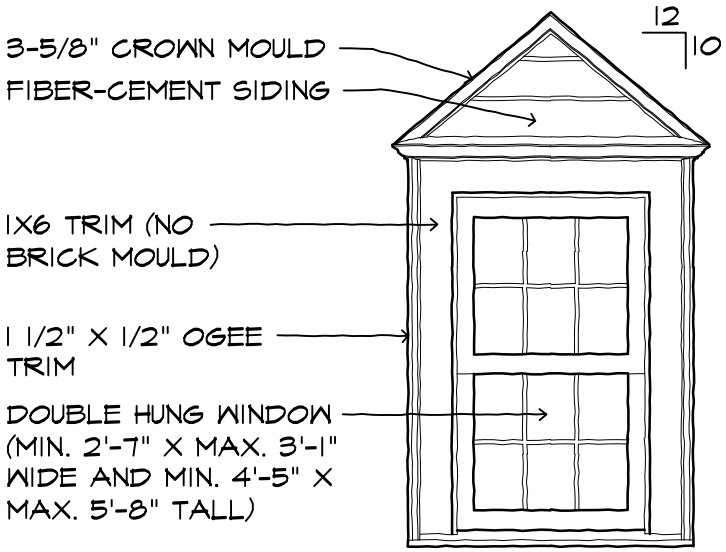

Dormer

EXHIBITS // DRAWINGS

Doors

Examples of architectural door treatments are below. Corrosion-resistant doors may be simply painted, or when desirable or highly visible, can receive decorative treatment applied to the front.

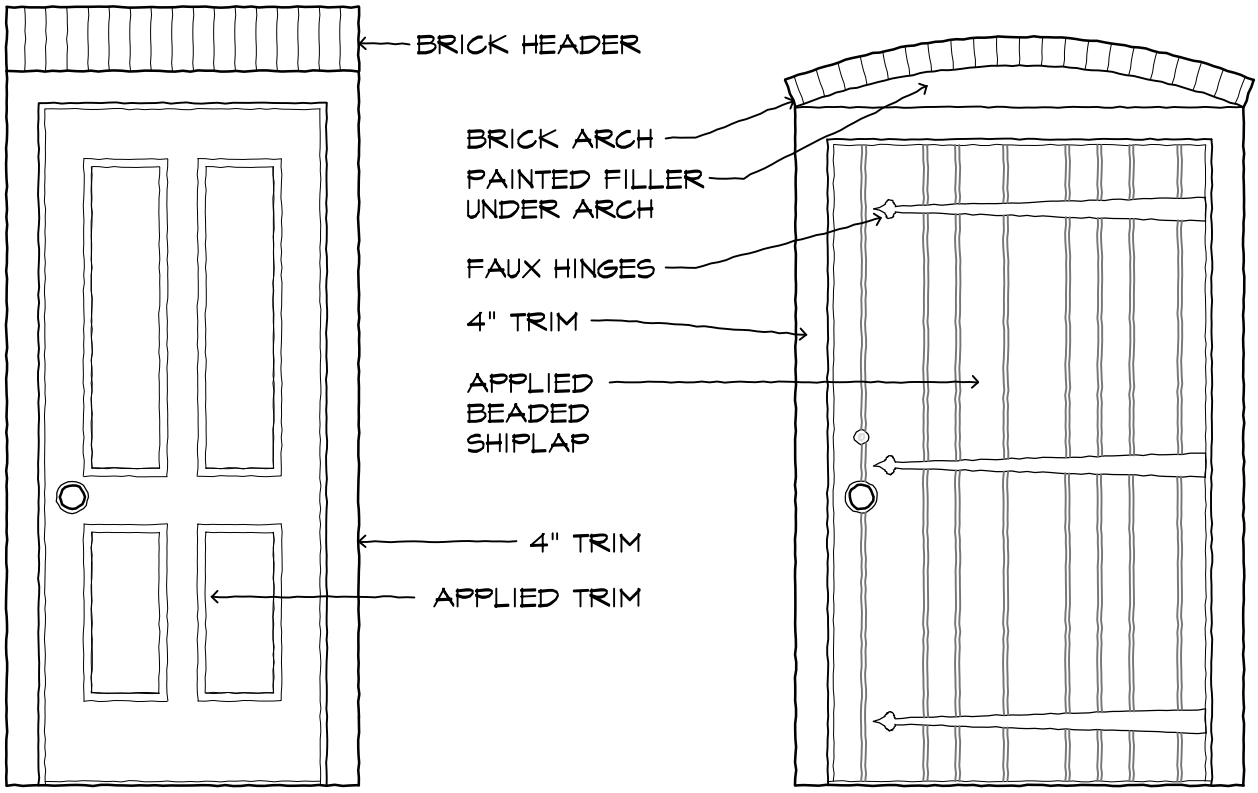

Doors

EXHIBITS // DRAWINGS

Doors

Examples of architectural door treatments are below. Corrosion-resistant doors may be simply painted, or when desirable or highly visible, can receive decorative treatment applied to the front.

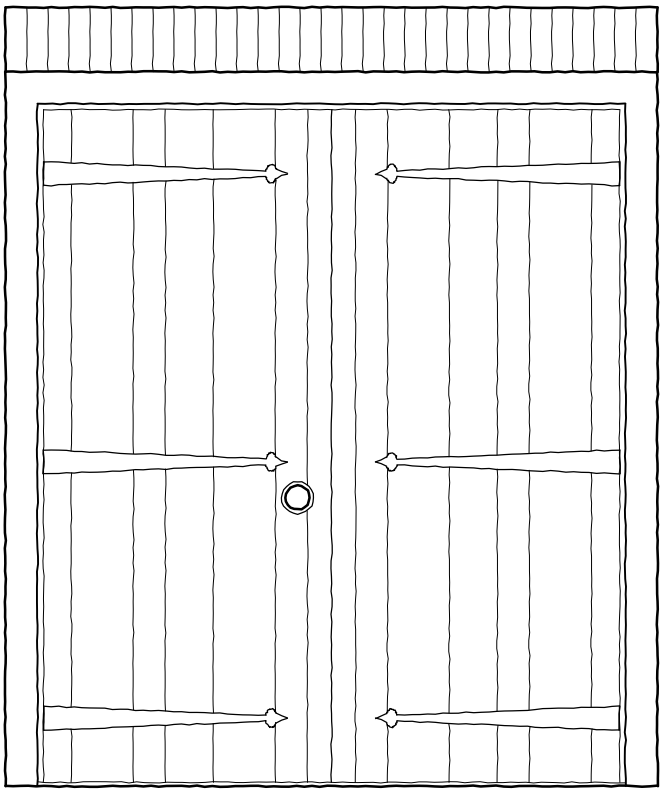

DOORS

EXHIBITS // DRAWINGS

Cornice

The following cornice details are intended to give examples of the range of possibilities. Cornice details should be in proportion to the overall building scale.

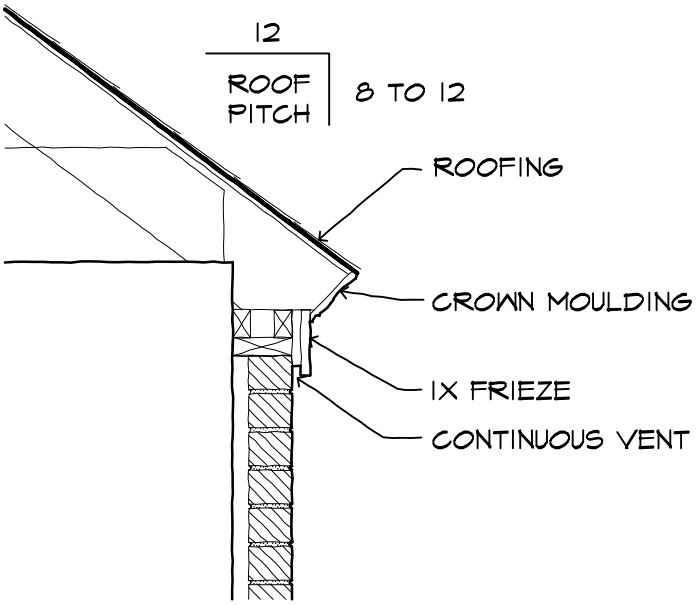

Small cornice

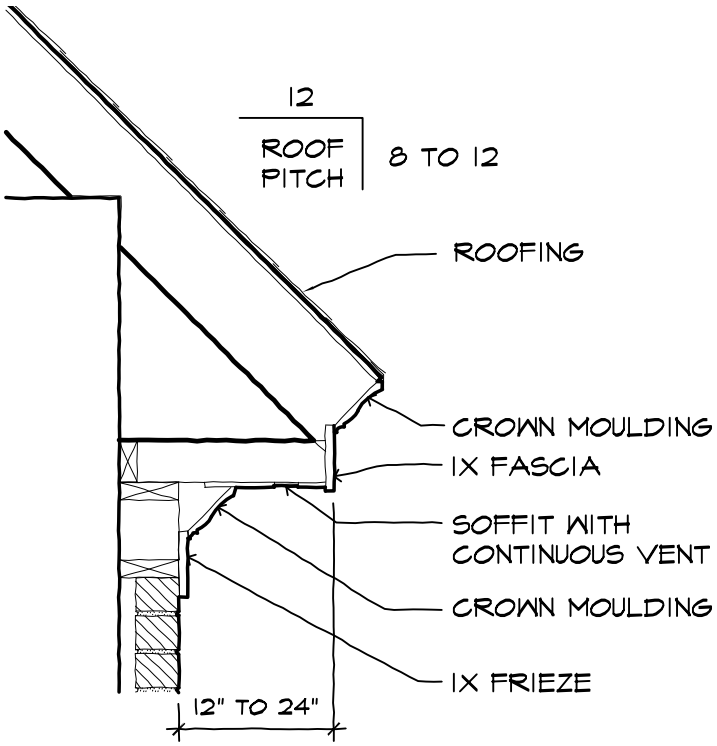

Large cornice

EXHIBITS // DRAWINGS

Cornice

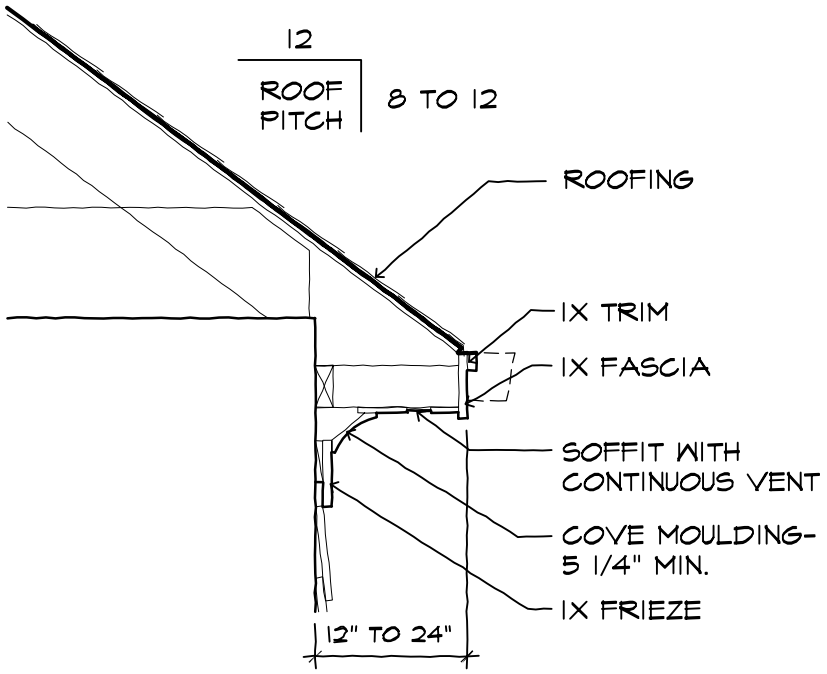

Large cornice

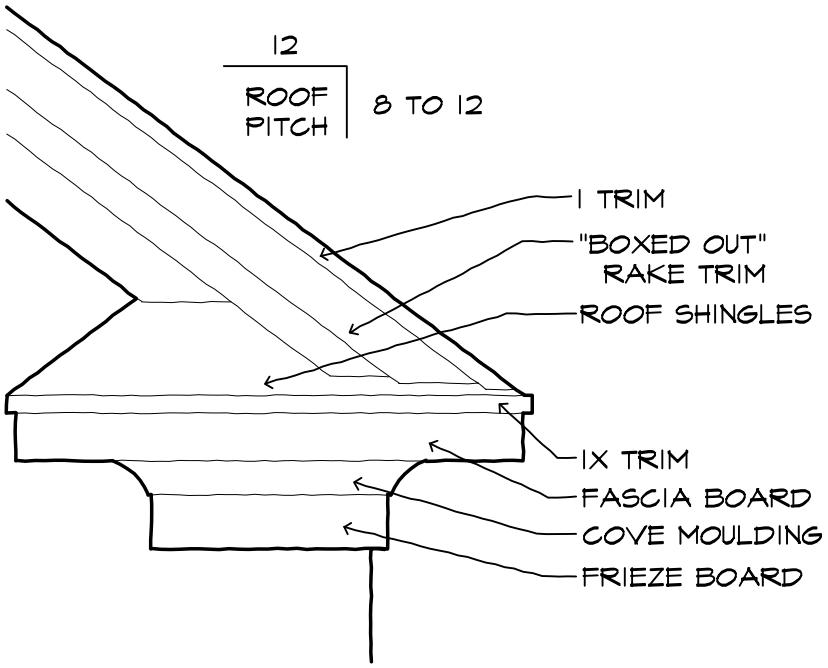

Cornice return

EXHIBITS // DRAWINGS

Porches

In some cases of high visibility or importance, a porch may be desired to maintain continuity in a neighborhood or hide unsightly but necessary elements.

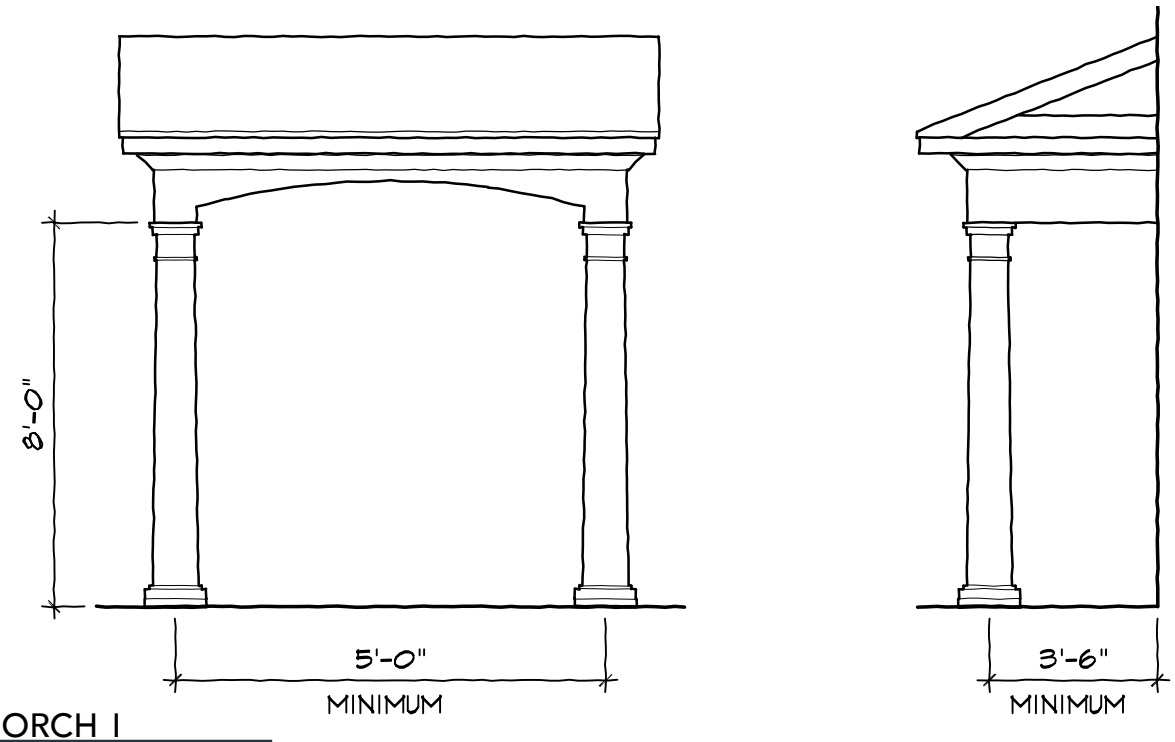

Porch I

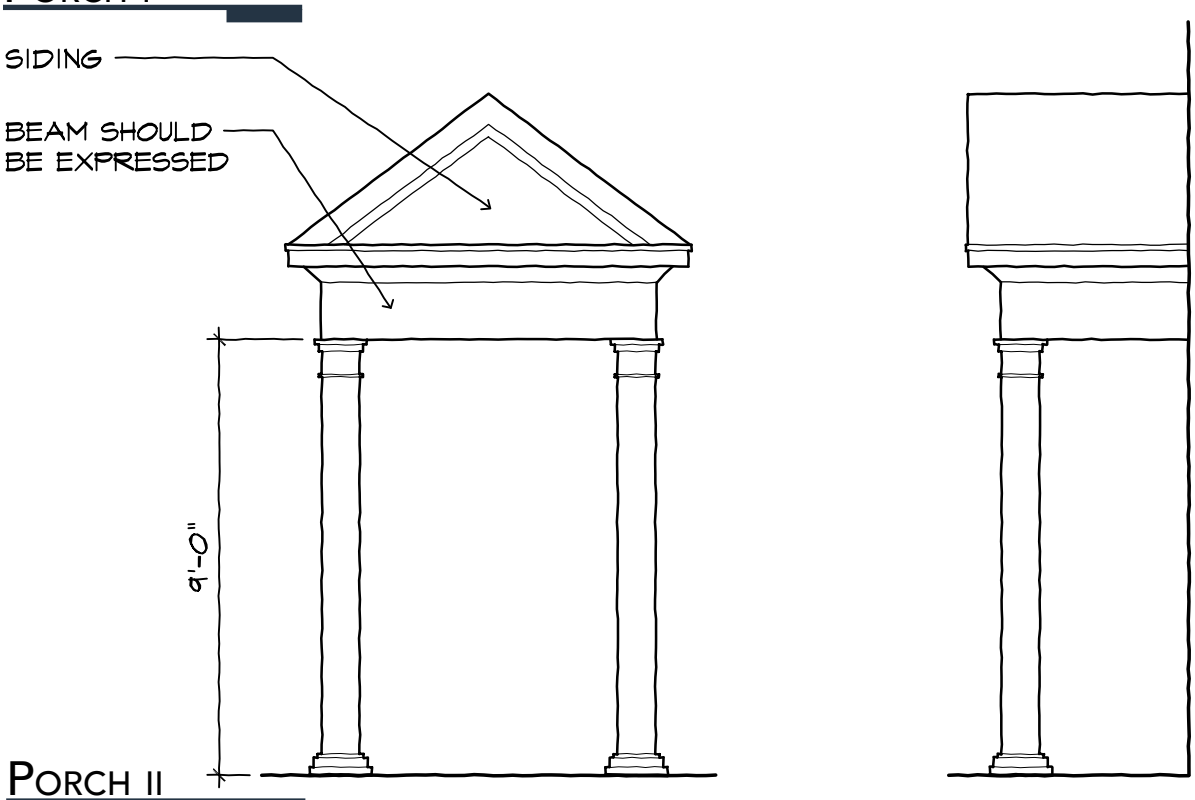

Porch II

EXHIBITS // DRAWINGS

Fences

A picket fence should be used where visual screening is less important, but perimeter security is still required. A solid fence may be used where visual screening is of primary concern.

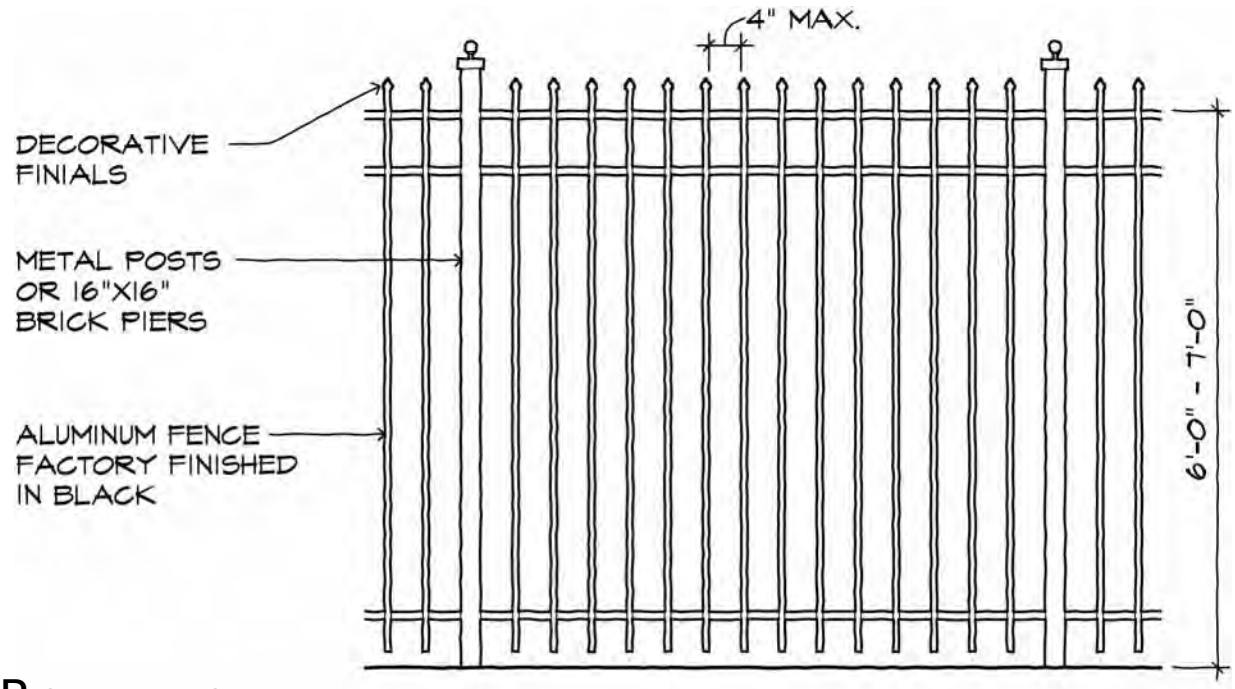

Picket fence

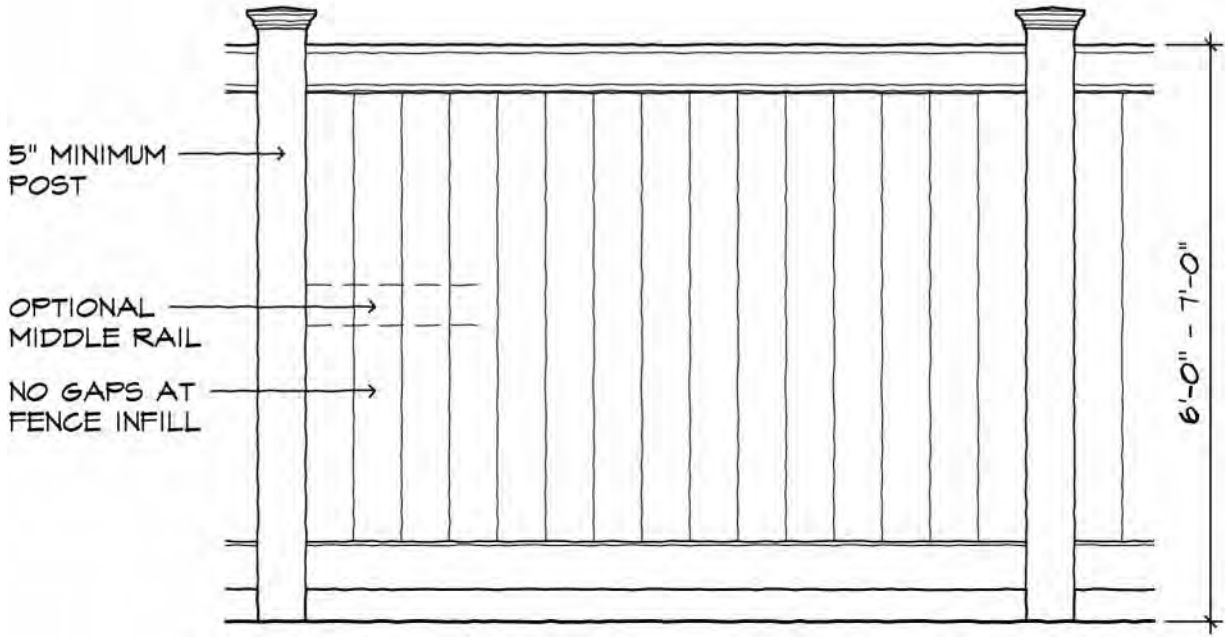

Solid Fence

EXHIBITS // DRAWINGS

Signage

Standard Property Sign

The Claremont Pump Station is completely submersible, and would not be easily detectable without property signage.

12″

26″

Combined Safety Sign

Standard safety signage to be displayed at personnel entrances.

12″

11″

Fence Sign

Typical information required by locality on perimeter security fencing (consult localities for specific requirements).

EXHIBITS // CASE STUDY I

Big Bethel Road Pressure Reducing Station

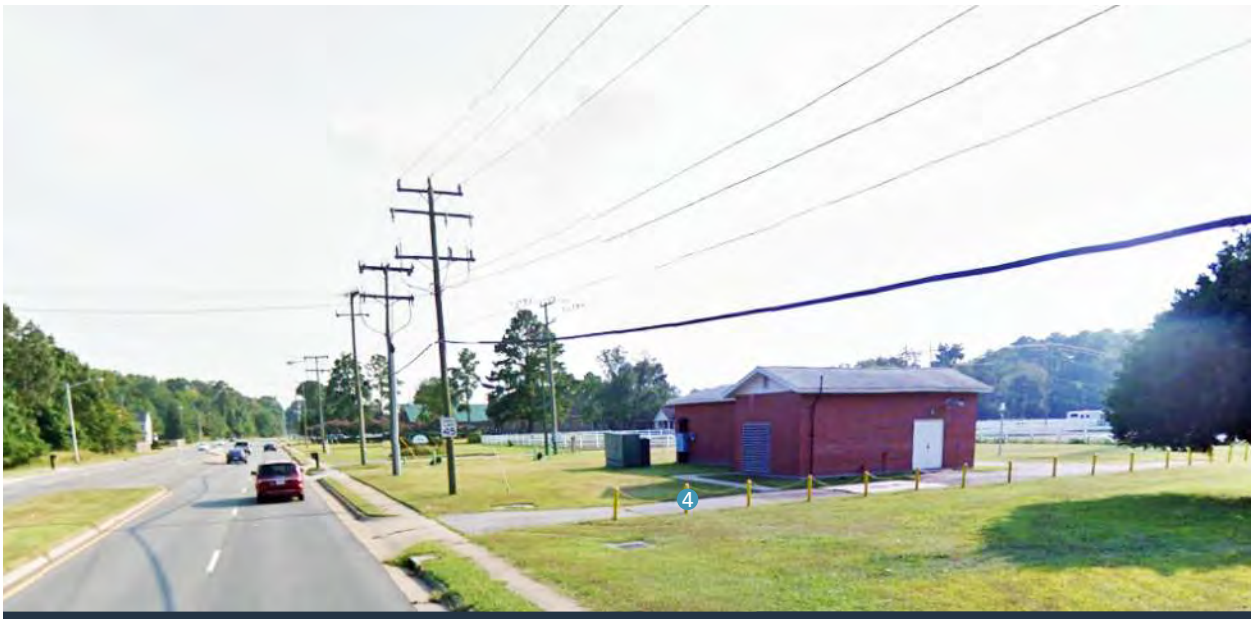

EXISTING CONDITIONS // STREET VIEW

1. Immediate rural site in suburban surroundings.
2. No clear front setback created by neighboring properties, so location of pump station is acceptable.
3. Lack of established tree cover and close neighbors results in the pump station being highly visible.
4. Bright yellow fence should be eliminated or replaced with one more contextually appropriate.

EXISTING CONDITIONS // SIDE VIEW

1. Aluminum louvers of different styles and shapes should be standardized to the extent possible and painted to match brick or doors.
2. The roof slope is too low and displays a lack of detailing.
3. Electrical equipment is highly visible from the front facade and should be relocated away from views or screened.
4. Exhaust fans should be located inside with louvers visible on the exterior.

EXHIBITS // CASE STUDY I

Big Bethel Road Pressure Reducing Station

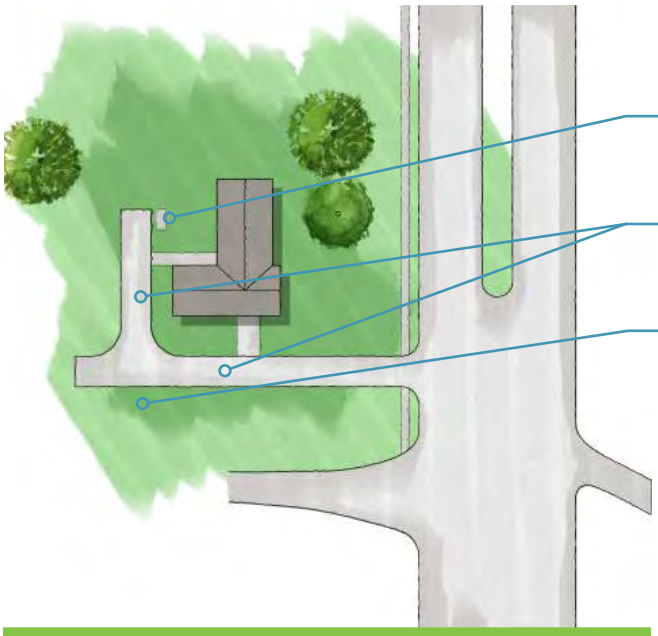

1

Relocate electrical equipment to rear.

2

Service entrance at rear, and side if necessary.

3

L-Shaped Massing is broken up by faux porch extension.

NEW SITE PLAN

NEW // STREET VIEW

1. Massing and material choices should reflect the surrounding areas.
2. Closed shutters at front facade are used to create visual interest.
3. Head heights for doors, windows, and louvers should be well coordinated.
4. Aesthetic front porches should be sufficient in depth.
5. Add handrails at front entrance to create focus on doorway.

EXHIBITS // CASE STUDY II

Atlantic Pressure Reducing Station, Virginia Beach, Virginia

EXITING CONDITIONS// STREET VIEW

1. Existing pump station extends past the established set back line of the surrounding structures.
2. Massing shows no connection or response to adjacent houses.
3. Hip roof lessens the impact of such a large structure.

EXITING CONDITIONS// SIDE VIEW

1. The blank front facade of the existing pump station provides low architectural detail in contrast to the surrounding residential neighborhood.

EXHIBITS // CASE STUDY II

Atlantic Pressure Reducing Station, Virginia Beach, Virginia

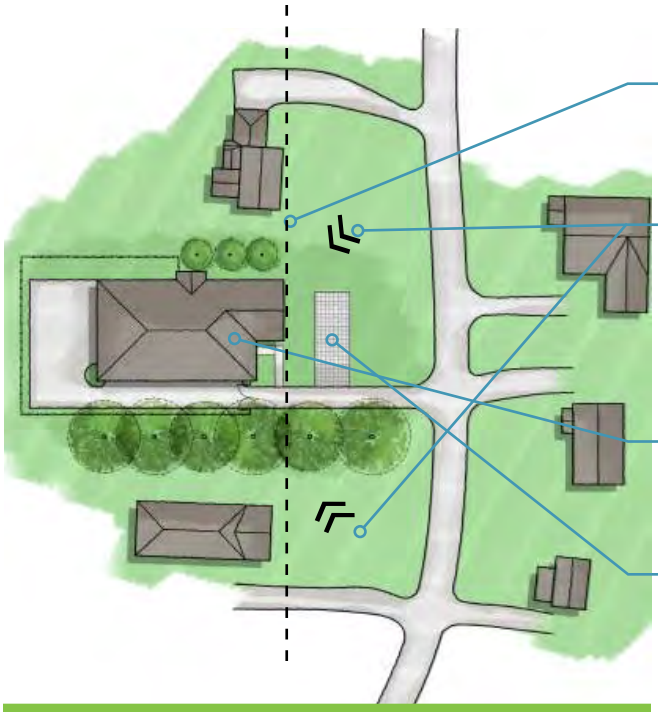

1

New pump stations should respect the front setback established by existing adjacent buildings.

2

Corner views should also be considered in design. Where existing tree cover blocks the view, the architectural treatment can be lessened. Where no screening exists, attention should be given to side elevations.

3

Break up large massing into smaller elements with particular focus of the street side.

4

If hardscape is required at front, choose aesthetic and permeable pavers.

NEW SITE PLAN

NEW // STREET VIEW

1. The hip roof lessens the impact of the large building.
2. 3′-6″ Water table.
3. 7′-0″ Fence for additional screening and to match scale of pump station.
4. Narrow driveway can widen behind fence.

EXHIBITS // CASE STUDY III

Newmarket Creek Pump Station, Hampton, Virginia

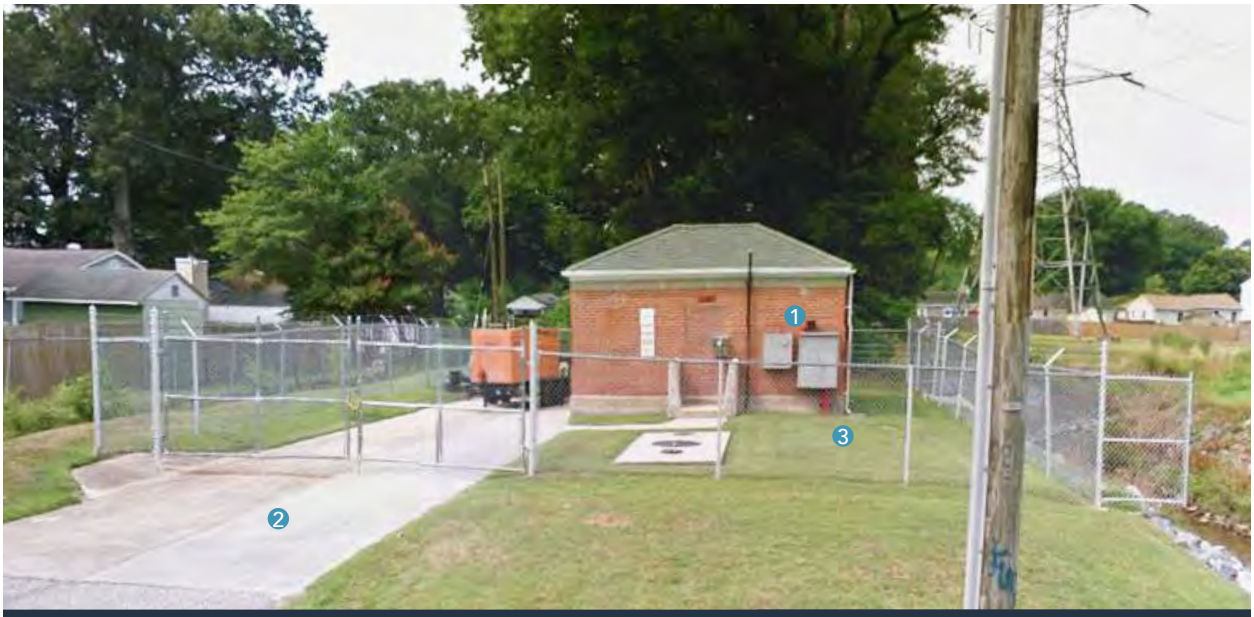

EXISTING CONDITIONS // STREET VIEW

1. Electrical equipment could be moved to side or rear of pump station.
2. Driveway should be the same width as adjacent properties, or less - access at rear can be wider.
3. Fencing should be scaled back to front facade and replaced to match surrounding materials.

EXISTING CONDITIONS// SIDE VIEW

1. New vent piping should be added in a careful manner and not merely applied to exterior.
2. Existing flood protection was modified and should be removed.
3. Service doors can be painted to blend into brick.

EXHIBITS // CASE STUDY III

Newmarket Creek Pump Station, Hampton, Virginia

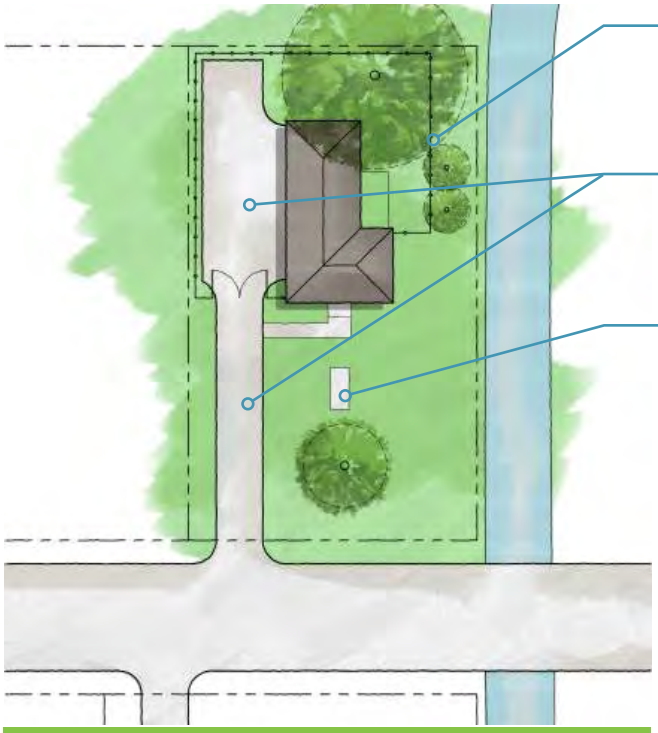

1

Fence as little of the site as possible. If possible, fencing should be set back from the front facade.

2

Maintain a narrow driveway but still allow for wide service pad in fenced area.

3

Small manholes or access hatches at grade may be left outside of fenced area if properly secured.

NEW SITE PLAN

NEW PUMP STATION // STREET VIEW

1. Faux or real entry door at front can be laminated with architectural treatment.
2. Closed shutters provide simple pattern at the front facade.
3. Fence is set back from front facade as much as possible.
4. If necessary, protruding elements can be painted to blend into surrounding brick.

EXHIBITS // CASE STUDY IV

Providence Road Pressure Reducing Station, Virginia Beach, Virginia

EXISTING CONDITIONS // STREET VIEW

1. This site had high visibility from four sides - Providence Road (elevated above the site) and Old Providence Road (the "front" entrance).
2. At Providence Road, fencing did little to screen view. Use of landscaping and vegetation could have improved screening.

EXITING CONDITIONS // SIDE VIEW

1. Doors, louvers, and exhaust items needed to be painted to match existing brick.

EXHIBITS // CASE STUDY IV

Providence Road Pressure Reducing Station, Virginia Beach, Virginia

OPTION 1 // STREET VIEW

1. An extended roof structure hid the monorail and helped to block the unbalanced facade.
2. Full and clerestory faux brick windows created a rhythm to the facade.
3. The hip roof lessened the impact of the large building.

OPTION 1 // SIDE VIEW

1. Louvers fit easily into the established grid of brick window openings.
2. Large cornice details were used to match the scale of building.
3. The hip roof lessened the impact of the large building.

EXHIBITS // CASE STUDY IV

Providence Road Pressure Reducing Station, Virginia Beach, Virginia

OPTION 2 // STREET VIEW

1. Painted doors blended into the brick and visually disappeared.
2. A simple column dressed in brick lessened the impact of the monorail.
3. Standing seam metal roof instead of shingles.

OPTION 2 // SIDE VIEW

1. Faux brick arches provided rhythm to the blank facade and allowed for well placed louvers.

EXHIBITS // CASE STUDY IV

Providence Road Pressure Reducing Station, Virginia Beach, Virginia

FINAL DESIGN // STREET VIEW

1. The long, linear site necessitated equipment located parallel to the road. Decorative split-rail fencing and landscaping screen equipment and define a street edge.
2. The building design reflects adjacent residential buildings.

AS CONSTRUCTED // STREET VIEW

1. Multiple gabled components and different siding materials/colors break up the massing of the large building.
2. Louver finish colors blend in with adjacent materials.
3. The faux porch, handrails, and front door help the building blend into the neighborhood.
4. Foundation landscaping grounds the tall building.
5. Faux windows with shutters are used to create visual interest.

EXHIBITS // CASE STUDY IV

Providence Road Pressure Reducing Station, Virginia Beach, Virginia

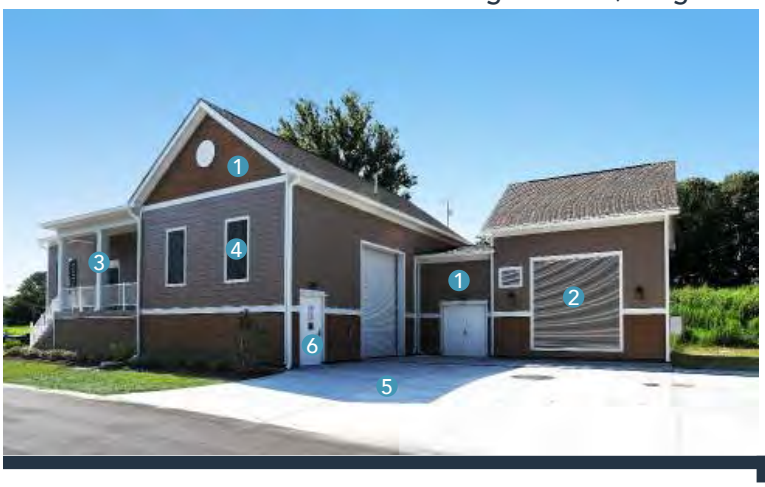

AS CONSTRUCTED // STREET VIEW

1. Multiple building elements break up the massing of the large building.
2. The generator enclosure mimics a garage, and the large louver is reminiscent of a residential garage door.
3. The faux porch element helps the building blend into the neighborhood.
4. Louvers are finished to match the window shutters to simulate a closed shutter detail.
5. Driveway paving extends to the foundation to eliminate a green strip that can be difficult to maintain.
6. Locating the personnel door to the side lessens the visual impact of required safety signage from the front.
7. Decorative split-rail fencing and landscaping screen equipment and define a street edge.

AS CONSTRUCTED // STREET VIEW

1. Multiple gabled components and different siding materials/colors break up the massing of the large building.
2. Generator exhaust has been located at the facade with the least visual impact.
3. SCADA antenna is located on the facade with the least visual impact.
4. Louvers are finished to match the window shutters to simulate a closed shutter detail.
5. Freestanding panels need screening. Additional landscaping is recommended.

EXHIBITS // CASE STUDY V

Shipps Corner Pump Station, Virginia Beach, Virginia

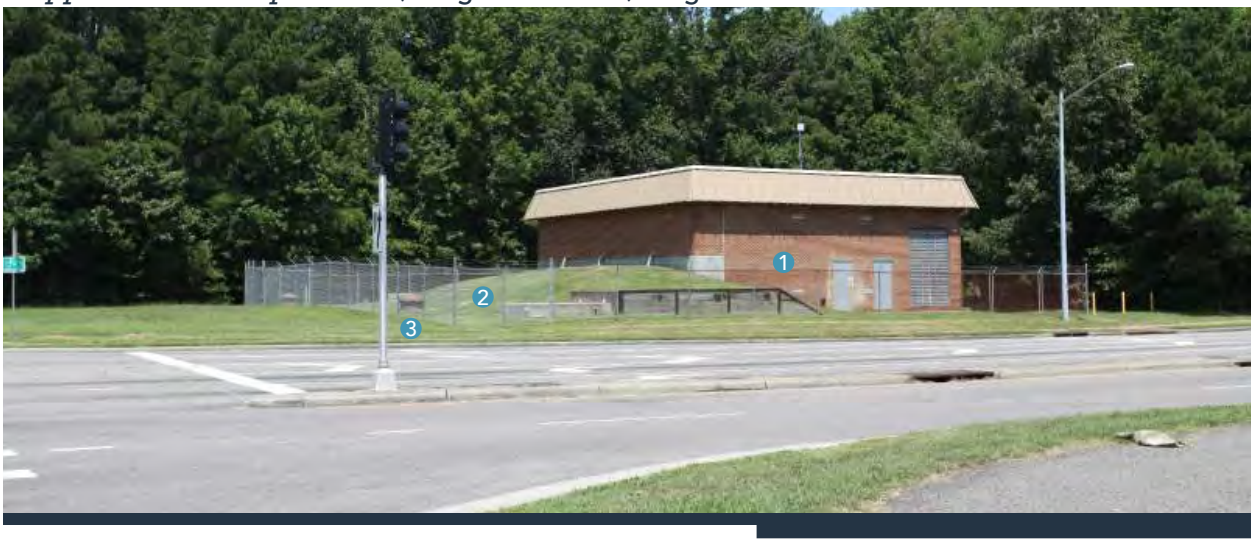

EXISTING CONDITIONS // STREET VIEW

1. The blank front facade of the existing pump station provides low architectural detail in contrast to the surrounding area.
2. Chain link fencing is not an appropriate fencing material. Use of landscaping and vegetation can soften the border with the street.
3. Above-ground equipment is not adequately screened from view.

OPTION 1 // STREET VIEW

1. Painting the brick a neutral color makes the building less of a focal point.
2. An applied pilaster treatment articulates the facade. The pattern draws the eye to the corner, yet creates more symmetry along the front.
3. A parapet draws the eye up and adds height to the single-story building.
4. Landscaping is used to create a stronger street edge and screen above-ground equipment from view.

OPTION 2 // STREET VIEW

1. Painting the brick a richer color makes the building more prominent.
2. A pattern of pilasters creates visual interest and symmetry along the facade.
3. A parapet draws the eye up and adds height to the single-story building.
4. Landscaping is used to create a stronger street edge and screen above-ground equipment from view.

EXHIBITS // CASE STUDY VI

Urbanna Pump Station, Urbanna, Virginia

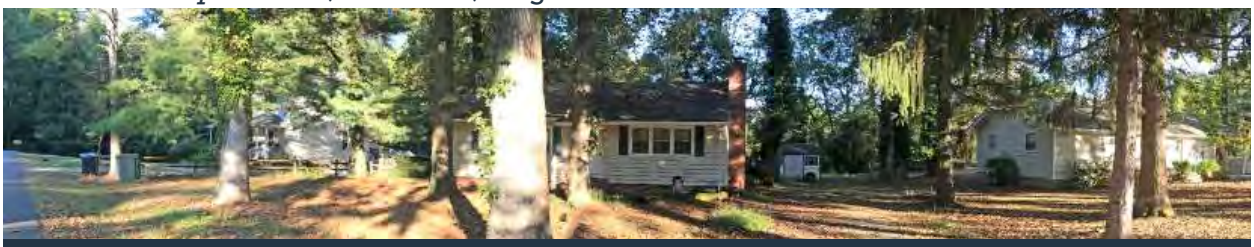

EXISTING CONDITIONS // STREET VIEW

Pump station should blend in with other modest-sized homes on this residential street.

OPTION 1

1. Driveway should lead to garage door to lend credibility as a "residence."
2. Personnel door on the front of the house necessitates safety signage on the front facade.

OPTION 2

1. Garage door is on rear of house; large paved turnaround space will be needed.
2. Personnel door on the front of the house necessitates safety signage on the front facade.

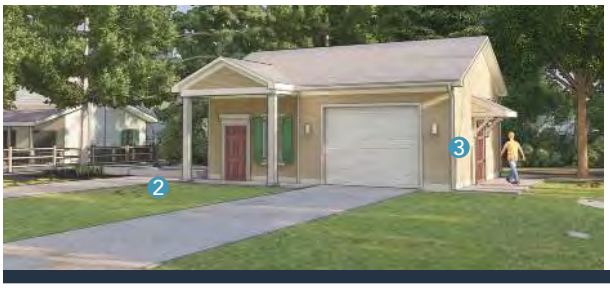

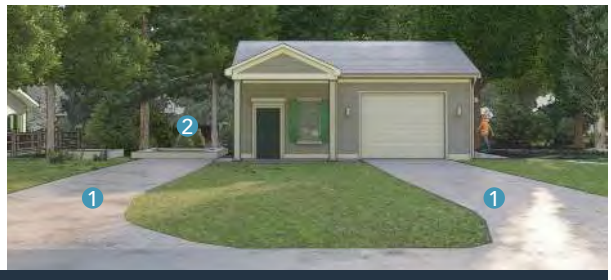

SELECTED OPTION

1. Consider a layout that does not necessitate two driveways. An alternative would be to use perviouspavers for the second driveway.
2. Provide appropriate landscaping and/or a fence to help screen the in-ground access area from the neighbor.
3. Personnel door on the side of the house eliminates safety signage on the front facade.

EXHIBITS // EXAMPLES

Arctic Avenue Pump Station, Virginia Beach, Virginia

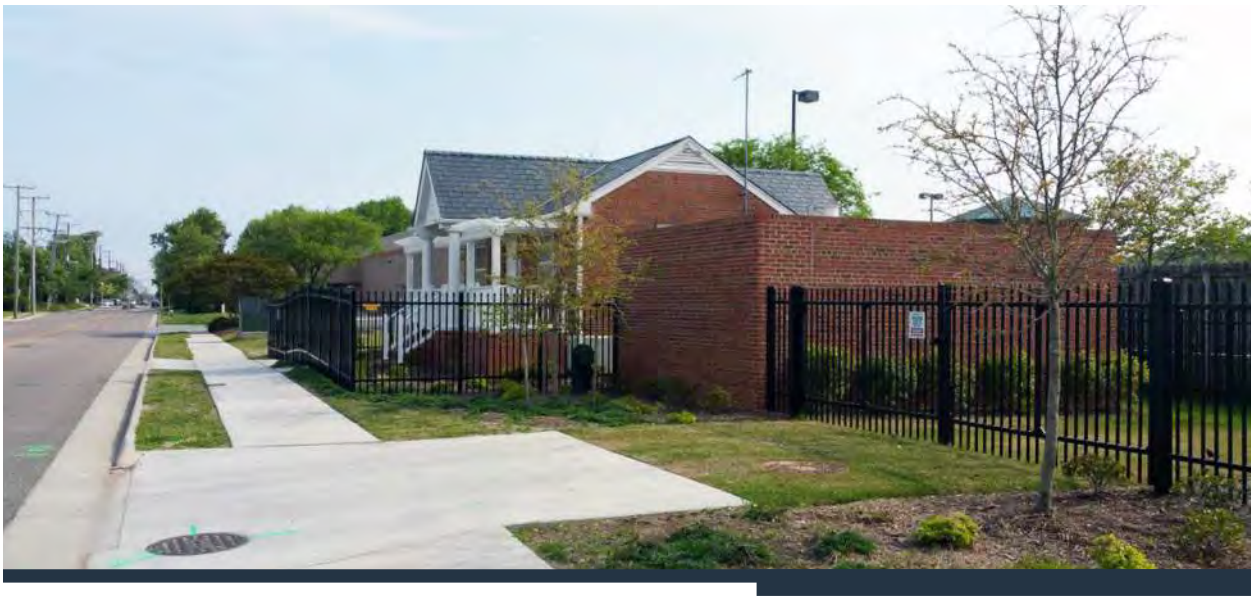

ARCTIC AVENUE PUMP STATION

1. Front porch and trellis gives scale to the building and mirrors the surrounding shore architecture.
2. Aesthetic security fence is appropriate to surroundings and screening needs.
3. Since this pump station is quite visible, the monorail should be hidden or modified to reduce its visibility.

EXHIBITS // EXAMPLES

East Beach Pump Station, Norfolk, Virginia

EAST BEACH PUMP STATION

1. High quality details are used throughout this pump station.
2. The generator and paved areas could be better visually screened.
3. If possible, the chimney/vent stack should be better proportioned to the building size.
4. Electrical equipment could be moved off of the façade adjacent the main street.
5. Use appropriate fencing for screening or security. Fencing should be factory finished for durability and ease of maintenance.

EXHIBITS // EXAMPLES

Locust Valley Pump Station, Long Island, New York

LOCUST VALLEY PUMP STATION

1. The close proximity of adjacent houses demanded attention in exterior detailing.
2. Permeable paving is appropriate for the residential context and for amount of expected wear.

EXHIBITS // EXAMPLES

Currituck County Waterworks, NC & James City County Pump Station

CURRITUCK COUNTY WATERWORKS

1. Architectural louver and door are similarly detailed and appropriate in height.
2. Large eave overhang is reflective of large building.
3. Half story closed shutters are used due to building height.

JAMES CITY COUNTY PUMP STATION

1. Architectural louver and door are similarly detailed and appropriate in height.
2. Small eave overhang is reflective of a small building.
3. Light fixture should be cutoff type, and less obtrusive.

EXHIBITS // EXAMPLES

Stonehouse Pump Station, James City County, Virginia

STONEHOUSE PUMP STATION

1. Fence hides elements from view, but could provide more screening by wrapping the corner.
2. Steep roof, short eave overhang, and covered entry demonstrate appropriate scale.

EXHIBITS // EXAMPLES

Mathews Pump Station, Mathews, Virginia

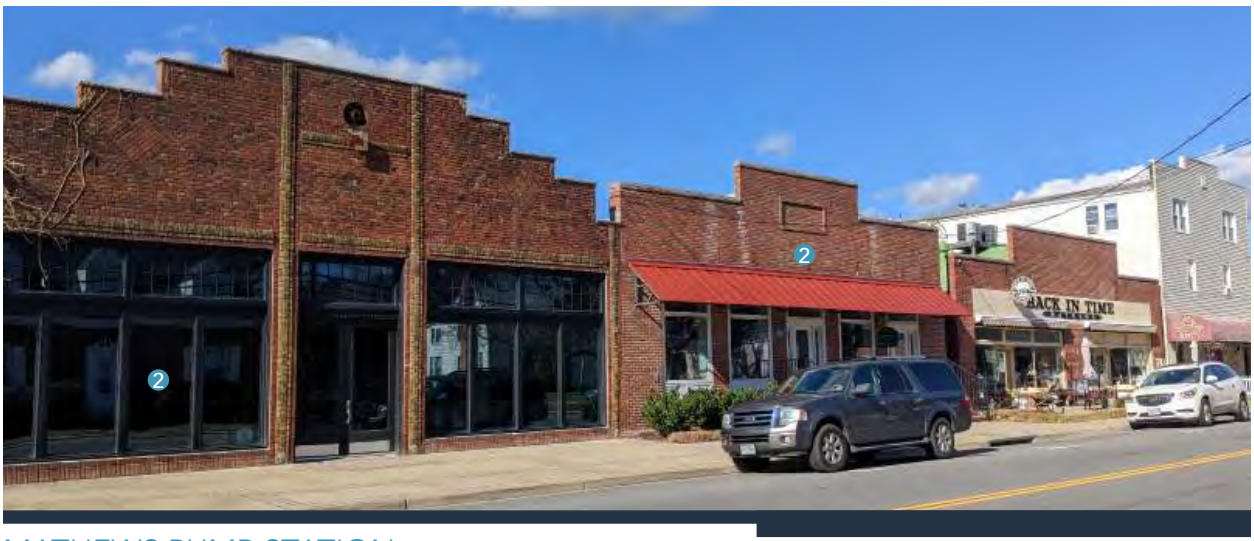

MATHEWS PUMP STATION

1. Facade materials, massing, and aesthetic reflect the existing storefronts nearby.
2. Nearby storefronts on Main Street. Existing buildings also define the pump station's setback from the street.
3. Generator is located on an inside corner at the rear of the building plan to screen it from view from the street.

EXHIBITS // EXAMPLES

Elbow Road Pressure Reducing Station, Chesapeake, Virginia

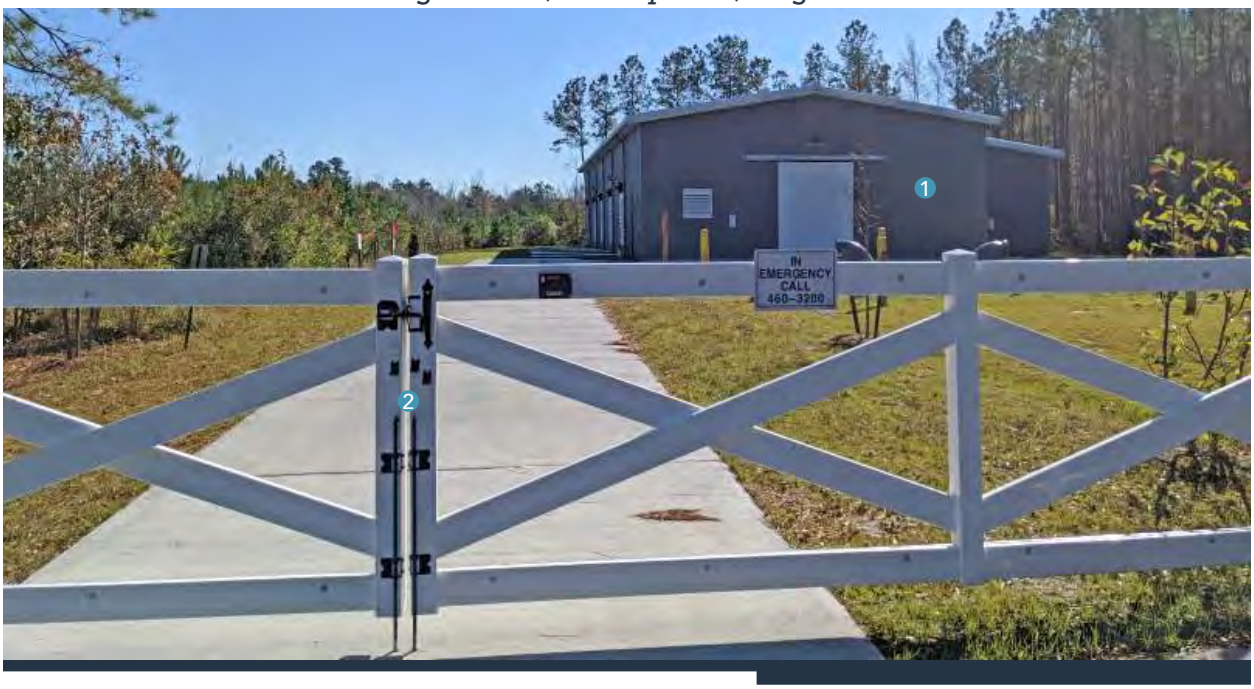

ELBOW ROAD PRESSURE REDUCING STATION

1. The building design mimics an agricultural building, which is suitable for the rural/agricultural setting.
2. The fence in this rural setting does not need to prevent pedestrian access, only vehicular access.
3. Odor control, SCADA antenna, and HVAC units are located on an inside corner at the rear of the building plan to screen it from view from the road.
4. Individual pump access pads have been used instead of continuous pavement. However, this condition can often make maintenance difficult.

EXHIBITS // EXAMPLES

Washington Street Pump Station, Hampton, Virginia

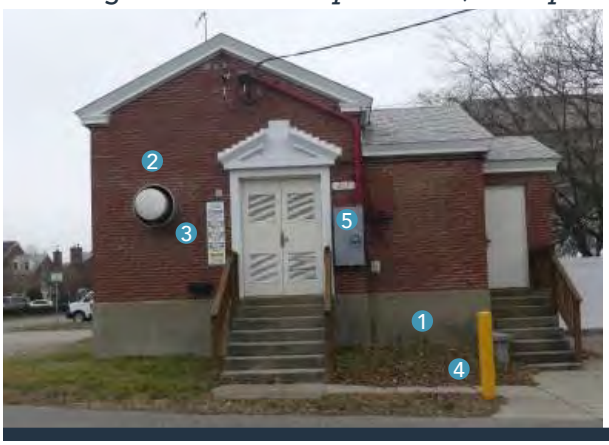

WASHINGTON STREET PUMP STATION

1. The existing structure was the only brick building on this residential block. Due to flood elevation requirements, the building was also raised significantly higher than the adjacent sidewalk and visually looked taller than neighboring homes.
2. The protruding exhaust fan on the front elevation was not appropriate.
3. Safety signage was prominently located.
4. A bollard seemed out of place in front of the "house."
5. The meter contrasted sharply against the brick veneer.
6. Dropping the new siding level below the water table and using raised landscaping beds visually lowered the building to street level. Raised beds also protect the building corner and eliminated the need for the bollard.
7. The exhaust fan was replaced with a louver in a low-contrast color and blends with the siding.
8. Safety signage is now more discreetly located at the personnel door/secondary "entrance."
9. The meter blends with the new siding color.
10. New materials and colors reflect the surrounding areas. Railing details and fencing blend with the features of neighboring homes (11).

EXHIBITS // EXAMPLES

Monroe Place Pump Station, Norfolk, Virginia

EXISTING CONDITIONS // STREET VIEW

1. The building needs to be replaced for multiple reasons. It is too small to accommodate new equipment and moreover, the building and equipment need to be raised to address new flood plain requirements.

PROPOSED NEW WORK

1. Quality materials, a sloped roof, and simple design reflect the surrounding residential neighborhood's character.
2. Raised equipment has been located outside to minimize the building size, but is adequately screened from view with landscaping.
3. The building has been significantly raised, but the use of a brick foundation for the stairs and a quality railing make this a design feature.
4. Odor control has been discreetly located at the rear elevation.
5. Enhanced perimeter landscaping is used to significantly screen the facility from view from the neighbors.
6. A combination of attractive fencing and landscaping lends a residential flair to the site and creates an edge at the sidewalk, similar to neighboring sites.

ARCHITECTURAL RENDERING BY GANNETT FLEMING

EXHIBITS // EXAMPLES

Victoria Boulevard Pump Station, Hampton, Virginia

EXISTING CONDITIONS // STREET VIEW

1. The building lacked articulation and did not relate to neighboring homes in scale or design.
2. The raised access, stairs, and railings were not integral with the building in material or style.
3. Building-mounted equipment was not adequately screened visually.
4. Tanks and other equipment were not screened from view from the street.
5. The flat roof made the small building appear squat.

NEW CONDITIONS // STREET VIEW

1. Columns and a front porch provide articulation and lend a residential appearance to the building.
2. The railing detail at the porch and the faux window help draw focus to the front door and provide visual interest.
3. A new sloped roof gives the building additional height.
4. Landscaping softens the yard and residential character.
5. Odor control equipment is not adequately screened from view.

EXHIBITS // EXAMPLES

Bridge Street Pump Station, Hampton, Virginia

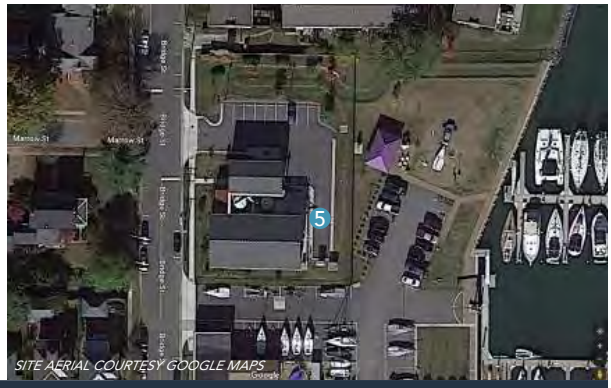

BRIDGE STREET PUMP STATION

1. Interior equipment had to be raised significantly to meet flood plain requirements, which necessitated a tall building. The architectural elements such as the porch, windows, and louvers were all "upsized" accordingly to match the large scale of the building. Quality material choices such as fiber cement shakes and a brick foundation are reflective of traditional architecture in the surrounding area.
2. Additional articulation such as a band board to give it a two-story appearance or a change in material could help break up the vertical masses into smaller elements.
3. Windows create rhythm and add visual interest to what would otherwise be a blank facade.
4. Odor control has been located in an alcove at the rear of the building out of site. Additionally, an attractive screen fence mimics the louvers and is an integral element to the design. The personnel door located in the alcove eliminates the need for safety signage at the front facade.
5. Typically, the raised platform and prominent monorail would be discouraged; however, it blends in with the industrial marina at the rear elevation in this instance.

EXHIBITS // EXAMPLES

25th Street Pump Station, Newport News, Virginia

25TH STREET PUMP STATION

1. The pump station meets the pedestrian scale of the walking path and urban park. The exterior architecture reflects the neighboring office tower's clean lines.
2. The composition and materials of the fence and railings integrate harmoniously with the building.
3. Enhanced landscaping is used to screen the tall foundation of the building, as well as a raised access area outside of the fenced area.
4. Landscaping and grading prevent access to most of the site, minimizing security fencing at the front.
5. A heavy cornice detail and generous overhang provide a horizontal element to temper the vertical masses of the small buildings.
6. Doors and louvers are painted/finished to closely match the walls, and thus, visually disappear.

EXHIBITS // EXAMPLES

Tabb Pressure Reducing Station & Offline Storage Facility, York County, Virginia

TABB PRS & OLSF

1. Quality materials such as brick and standing seam metal roofing reflect the adjacent high school's palette. The use of concrete panels, brick, and a dark green roof finish on the storage tanks integrates with the building's architecture.
2. Brick pilaster details break up the large mass of the tanks.
3. Enhanced perimeter landscaping is used to screen the facility almost entirely from view from the neighbors.

EXHIBITS // EXAMPLES

Floodproofing Measures

ELEVATED EQUIPMENT

1. The generator retrofitted at Bay Shore Lane Pump Station (Suffolk) was elevated due to flood zone requirements. This is not appropriate for pump stations visible from public areas or adjacent to residential areas.

ELEVATED EQUIPMENT

1. Generators and equipment retrofitted at Bloxom's Corner Pump Station (Hampton) were elevated due to flood zone requirements.
2. A 3D study was done to determine if landscaping would adequately screen the raised equipment from view.
3. Ultimately, it was determined that a fence was needed, and the landscaping softened the fence. A 6′ screen fence is appropriate in this instance as there were adjacent 6′ screen fences at neighboring residences.

EXHIBITS // EXAMPLES

Floodproofing Measures

ELEVATED BUILDINGS

1. The 25th Street Pump Station (Newport News) is elevated due to flood zone requirements. The raised foundation detail is mimicked in the security fence/ wall detail and becomes an architectural feature, integrating fence and building.

ELEVATED BUILDINGS

1. The Washington Street Pump Station (Hampton) is elevated due to flood zone requirements, and therefore, stood out from neighboring homes.
2. During renovations, the siding level was dropped below the water table to visually bring the building closer to the street level.
3. Raised landscaping beds serve to visually eliminate the extensive water table, as well.

EXHIBITS // EXAMPLES

Floodproofing Measures

DRY FLOODPROOFING

1. At the 25th Street Pump Station (Newport News), the drop-in flood gates are integral to the architectural design of the building and the materials blend seamlessly with one another.
2. The drop-in flood gates at Hilton School Pump Station (Newport News) contrast sharply with the building design and are not integrated into the design.

INTEGRAL FLOOD WALLS/LEVEES

1. One way to visually integrate flood walls with the building is to use compatible materials and details for both.
2. Levees can also be designed to follow natural land features and/or building footprints to blend seamlessly with the building.

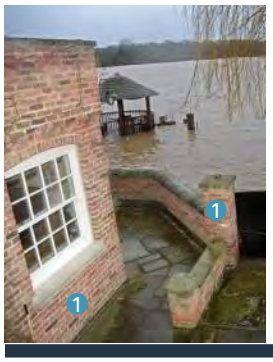

IMAGE SOURCE (RIGHT): WWW.DAILYMAIL.CO.UK/NEWS/ARTICLE-3380743/WHY-WAIT-MINISTERS-BUILT-20-000-FLOOD-DEFENCE-ENGINEER-FITTED-WALLS-GATES-PUMPS-COTTAGE-REALISE-DREAM-LIVING-RIVER.HTML

IMAGE SOURCE (RIGHT): WWW.FPRLANDSCAPING.CO.UK/PROJECTS/FLOOD-DEFENCE-MORE-BATH

GuernseyTingle

ARCHITECTURE | INTERIORS | PLANNING

4350 New Town Avenue, Suite 101
Williamsburg, VA 23188
757.220.0220

GUERNSEYTINGLE.COM

P.O. BOX 5911, VIRGINIA BEACH, VIRGINIA 23471-0911 (757) 460-7000 FAX (757) 460-2372

Submitted additions to HRSD PM and HRSD Public Information Specialist

Sample Beautification
Selections Log : Project: Powhatan PS (SS)

Description	Company	Website	Contact	Cost 2018	Reasoning
Front Door	Chempruf	http://www.chem-pruf.com/	Amy Crotty, acrotty@senneca.com 800-444-6924 ext 5385	$ 2,793.34	Paintable if tagged with spray, and fire resistant
Gutters	Atlantic Roofing and Siding	http://www.atlanticroofingllc.com/	Michelle Davis, michelle@atlanticroofingllc, 340-0045	$ 1,040.00	Had the color we were looking for to match other products
Fascia Wrap	Atlantic Roofing and Siding	http://www.atlanticroofingllc.com/	Michelle Davis, michelle@atlanticroofingllc, 340-0046	$ 575.00	Had the color we were looking for to match other products
Landscape	Ritter Grounds Maintenance Inc.	http://rittergrounds.com/	Tom Ritter, tom@rittergrounds.com, 650-5901	$ 3,487.36	Was only company to give me a quote
Address Plaque	Wayfair	https://www.wayfair.com/outdoor/pdp/old-century-forge-legacy-2-line-wall-address-plaque-ocfo1004.html		$ 49.99	

Considerations	Recommendation	Notes
Conduit	Paint all conduit to match the color of the wall it is set on so it blends better.	*Note this may be multiple colors-brick wall and soffit/fascia background color
WW Fan Equipment	Have the starter box for the fan powder coated to match gutters if the box is in the public's view and	*Ensure this does not void warranty
Plants / landscaping	Will be specific to each facility	*Desired for native to this area of Virginia, hearty, evergreen and low/minimal
Address Plaques	Standard is Black background and white lettering - see standard	*May need to consider color of plaque to match color scheme of station
Fencing	No full panel or privacy; preferably no fencing if possible; use decorative or vegetation	
Shutters	Will be specific to each facility	*may not always be used
Safety Signage	See standard	
mailbox	must be small, locate to the side or back of building	
Odor control system	try to obscure from public view	*use chimney stack, building alcove, decorative fencing/vegetation to block
Placement of equipment (new and when replacing existing equipment)	try to put as much as possible inside of the building and design the façade of the building around it	*Be thoughtful in the design this structure should be functional and esthetically pleasing
Lighting	add decorate and functional lighting that fits with the design or upgrade	
Gutters	install 'leaf guard' type of system to ensure minimal/ zero maintenance	
Roof Safety hook attachments	for future maintenance work on the building / safety requirement	*consult Ray Holmes
outlet boxes/other	blend these into the building/ if	
Siding	hardiplank 8+-inch reveal; architectural siding or shingles	

Attachment C – Address Sign Specification

HRSD Address Sign Standard Specification

In an effort for consistency, ease of maintenance HRSD has chosen a standard address plaque to be used for all new or beatification initiative projects (pump station, PRS and other). In most cases the background should be black with white lettering and trim. This sign should not include the street address but just the numbers. The Architectural Review Committee will approve any variation of the color scheme if it is recommended it be altered from the standard to match the structures esthetics.

The plaques have been ordered from Wayfair.com in the Cambridge 1 style; SKU: VFHD2596 but another vendor may be used if the specs are matched or better.

Weight and dimensions

Overall 6'' H x 10.25'' W x 0.32'' D
Overall Product Weight 1.9 lb.

Features

Product Type	Wall Address Plaque; Lawn Address Sign
Theme	Classic/Decorative
Plaque Shape	Arch
Text Capacity	Yes
Orientation	Horizontal
Number of Lines	1
Number of Characters	4
Maximum Character Height	3 Inches
Primary Material	Aluminum
Primary Material Details	Cast in recycled aluminum
Country of Origin	United States

Sample Cambridge 1 – Line Address Plaque:

HRSD

EMERGENCY CONTACT NUMBER

757-XXX-XXXX

HRSD

EMERGENCY CONTACT NUMBER

757-XXX-XXXX

DANGER

NO SMOKING

HARD HAT AREA

HOT WORK PERMIT REQUIRED

CAUTION

NO TRESPASSING

HEARING PROTECTION REQUIRED WHILE GENERATOR IS RUNNING

WATCH YOUR STEP

Sign Specifications:

Phone Number - Insert the appropriate phone number for each shore (NS, SS, SC)

Sizes:

10” X 8.5” small emergency #

10” x 20” larger, full info sign

-Black text

-Double lined boarder

-040 Aluminum

-Printed on Oraray 3651 RA

-Laminated with Oraguard 210 (2+ year UV protection)

Attachment D – Safety Signage Specification for Buildings

*This standard approved by HRSD General Manager and Safety Manager 2017

Project Map

Attachment E - Landscape Planning Plan Example

City Center Boulevard to Oyster Point Road Median Landscape Restoration

Legend

T5

Tree Type	Quantity
Regal Prince Columnar Oak	10

T2

Tree Type	Quantity
Brandywine Red Maple	14

T4

Tree Type	Quantity
Muskogee Crape Myrtle	70

T7

Tree Type	Quantity
Chinese Pistache	22

T1

Tree Type	Quantity
Hightower Willow Oak	24

T3

Tree Type	Quantity
Bosque Lacebark Elm	30

Section 3 - Use of Technical Memorandum for CIP Projects

A. Introduction - HRSD and FIRMs have used technical memorandum to summarize design criteria and equipment recommendations on many of our past projects. A technical memorandum is typically more limited in scope than a Preliminary Engineering Report (PER) and is normally used to document project decisions rather than review numerous aspects of a conceptual design.

B. Circumstances for Use - A technical memorandum can be used instead of a PER in the following circumstances:

1. When the project is of a relatively small size (<$500K)
2. When the project involves a relocation of an existing HRSD pipeline as part of a VDOT or Locality administered project that impacts HRSD's facilities
3. When an immediate decision is required due to a documented time constraint by HRSD
4. When a series of technical memorandum will be used and ultimately grouped together in a PER

C. Approval for Use - The use of a technical memorandum instead of a PER shall only be used with approval by the responsible Chief of Design and Construction.

End of Section

Section 4 – Monthly Project Status Reporting

A. Introduction - FIRMs who are contracted for project design and construction related services, are required to generate and submit a project status report along with their monthly payment request for services rendered, in addition to other required forms. This Section contains specific guidelines for FIRMs to follow related to content and format of these project status reports.

B. Content and Format for Project Status Report (Part 1)

1. The template in "Exhibit A" shall be used by each FIRM for any capital and/or non-capital funded project unless otherwise agreed to by the HRSD Project Manager / Task Manager in writing as part of the Record of Negotiation.

2. The Project Status Report shall be updated monthly and submitted along with the payment request. Accurate and updated project status reports are needed such that HRSD Project Managers can update their project status in Unifier. This information is especially important as projects enter the construction phase for construction website updates viewed by the public, HRSD Communications Department, and other stakeholders.

    a. For Capital Projects – submit via HRSD's Enterprise Project Management (Unifier) system.
    b. For Non-Capital Projects – submit via HRSD's Enterprise Resource Planning (ERP) system .

C. Content and Format for Project Expenditure Tracking (Part 2)

1. The example graph in "Exhibit B" shall be generated by each FIRM for any capital and/or non-capital funded project unless otherwise agreed to by the HRSD Project Manager / Task Manager in writing as part of the Record of Negotiation. For each assigned phase of a project, the graph to reflect the following:

    a. Originally forecast project spending based upon the negotiated services fee.
    b. Actual expenditures by the FIRM tracked monthly.
    c. Adjustment of fee and scope of services via an approved amendment to the negotiated services for the active phase of work.

Exhibit A

HRSD FIRM PROGRESS REPORT
FOR
[INSERT PROJECT NAME AND CIP #]
FOR PERIOD FROM [*INSERT START DATE]* TO [*INSERT END DATE*]

General Status:

[Provide a high-level status update including project phase in 1-2 sentences.]

Work Completed by FIRM this reporting period:

[Provide a detailed summary of work completed during the progress period (do not repeat past status items from previously submitted Progress Reports in this section). CA/CI summary tables may be deleted if the project is not in the Construction phase.

- *Example 1 (Design). Addressed HRSD's 90% review comments and prepared site plan submittal*
- *Example 2 (Construction). Conducted and documented Progress Meeting No. 1 on 2/1/2023*
- *Example 3 (Construction). Prepared and issued Work Change Direction No. 1 regarding vertical offset around storm drain]*

Construction Administration Summary:

Items Reviewed / Issued	Total – This Period	Project Total
Submittals		
Requests for Information		
Requests for Proposal		
Field Orders		
Work Change Directives		
Change Orders		
Payment Applications		
Progress Meetings		
Other Meetings		

Construction Inspection Summary:

Week Beginning (Monday)	No. of Hours (Inspector Name #1)	No. of Hours (Inspector Name #2)	No. of Hours (Inspector Name #3)
5/2/2023			
5/9/2023			

*[*Note: If there are more than three inspectors, you may list hours by discipline (e.g. general, electrical, structural, etc.) or consult the HRSD Project Manager.]*

Work Completed by Contractor:

[During the construction phase, provide a brief summary of construction activities conducted during the progress period.

- *Example 1. Finished laying pipe from First Street to Tenth Street and performed pressure test]*

Upcoming / Anticipated Activities for the next reporting period:

- *[List work to be completed in the next 30 days by the consultant.]*

Problems / Deviations from Plan:

- *[List any scope changes during the design phase, major changes to the design documents during construction, or any other problems/deviations encountered.]*

Information / Approvals Needed:

- *[List any information or approvals needed from HRSD, a Locality, a Regulatory Agency, a Railroad, another utility, etc.]*

Additional Services Request for Payment:

[Use of Additional Services requires prior authorization. Provide a list of authorized additional services invoiced during this period and include the necessary documentation.

- *Example 1. Public meeting conducted by Engineer ($Dollar Amount)*
- *Example 2. Additional test holes performed by Subsurface Utility Provider ($Dollar Amount)]*

Potential Upcoming Commission Items:

- *[Describe any items that may require HRSD Commission Action in the next 60 days with estimated cost and schedule implication.]*

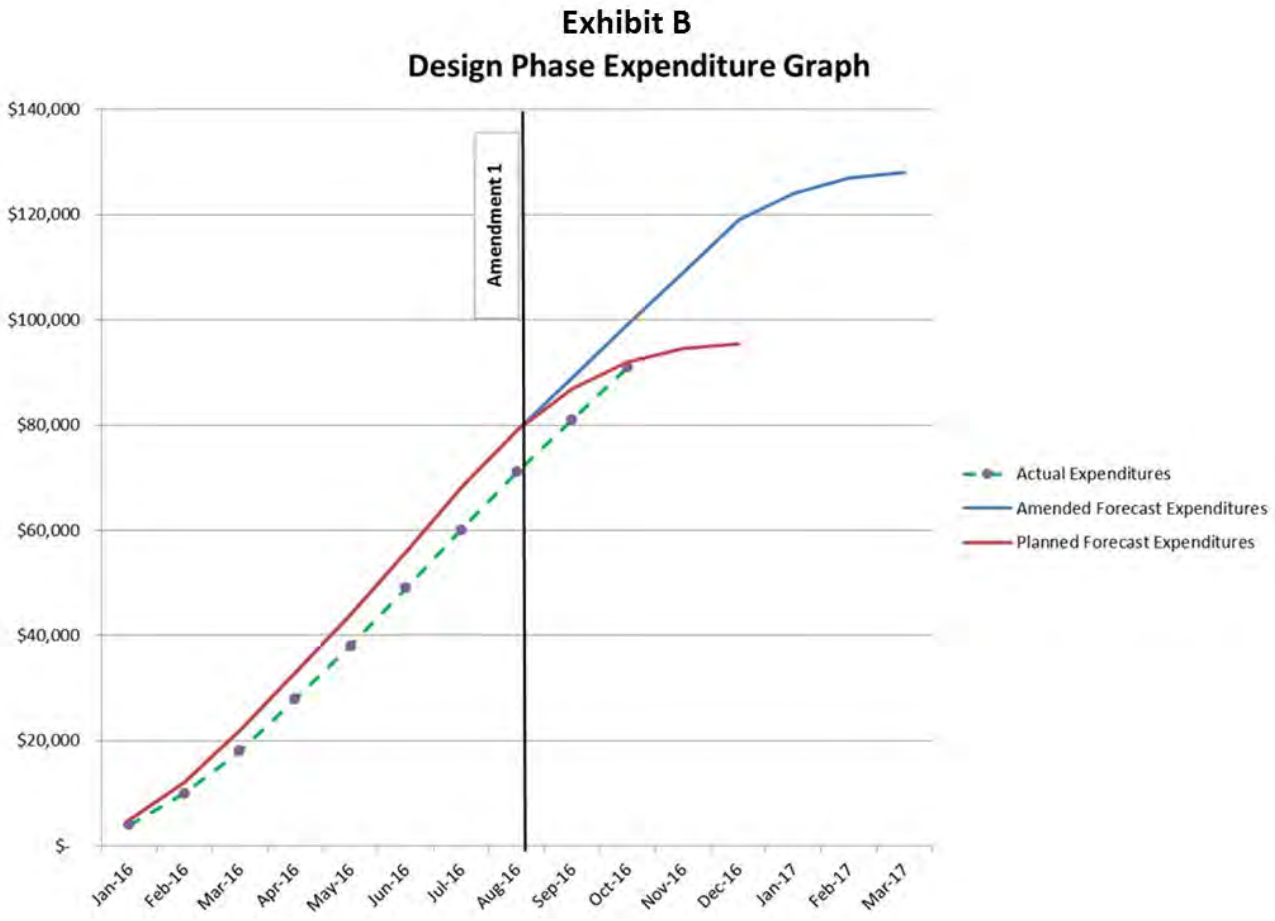

End of Section

Section 5 - Capital Project Cost, Schedule, and Risk Reporting

A. Introduction - The Director of Engineering provides quarterly briefings to the Commission that include information on the performance of staying on schedule and within budget for capital projects. Comparisons are made to actual project budget verses planned project budget, and actual project duration verses planned project duration for each capital project underway with PER, design, or construction efforts. Project costs and schedules tend to grower higher and longer due to several justified reasons as compared to the figures that HRSD includes in the published CIP manual. For projects such as those included in the EPA Rehabilitation Action Plan where missing a completion deadline comes with stipulated penalties and damage to our credibility, it is critical that HRSD have accurate assessment of schedules, costs, and risks that may jeopardize desired outcomes.

HRSD has adopted the Association for the Advancement of Cost Engineering (AACE) construction cost estimate classification philosophy for the various stages of study and plan development as listed below. The following classifications are to be used for reporting to HRSD at these described milestones the Opinion of Probable Construction Costs (OPCC) along with the upper and lower range of the class estimate unless otherwise approved by the responsible HRSD Project Manager.

- Class 5: up to 2% project definition (Initial Budget Development stage) with expected accuracy range of -20% to +100% above calculated cost.
- Class 4: project definition up to 30% (Study or PER stage) with expected accuracy range of -15% to +50% above calculated cost.
- Class 3: project definition up to 50% (Preliminary Design stage) with expected accuracy range of -10% to +30% above calculated cost.
- Class 2: project definition up to 90% (Pre-Final Design stage) with expected accuracy range of -5% to +20% above calculated cost.
- Class 1: project definition at 100% (Bid Advertisement or Preconstruction stage) with expected accuracy range of -3% to +15% above calculated cost.

This Section identifies tracking total project costs, OPCC, schedule and risks to cost / schedule against the CIP baseline during the life of each project. HRSD desires to learn what is happening on individual projects as well as have an opportunity to make changes to compress budget or schedule at earlier stages if possible. Cost estimates should include design, construction, land acquisition and all other project related costs.

B. FIRM's Responsibilities - The FIRM shall provide the following reports to HRSD's Project Manager as indicated below for each project.

1. An example hypothetical CIP Project Schedule – Cost – Risk report is included in Attachment A. The FIRM to coordinate with the HRSD Project Manager on proposed format for this report. In general, this report needs to be created, updated, and submitted along with monthly payment reimbursement requests for all projects with the total anticipated duration of a project greater than 2 months.

a. Each report will reflect the original CIP project schedule and budget, as well as the previous stage report findings on schedule, budget, risks, and possible risk mitigation measures to reach both Substantial Completion and Final Completion for the project.

b. This singular report for each CIP project to be modified and updated such that all information throughout the life of the project will be contained in a single document. The document will be in format as approved by the HRSD Project Manager and will accompany the monthly payment reimbursement request unless otherwise approved by the HRSD Project Manager.

2. A template summary table for Project Budget Estimate History and OPCC classification reporting as detailed above is included as Attachment B.

   a. This table for each CIP project to be modified and updated such that all information throughout the life of the project will be contained in a single document. The document will be in format as approved by the HRSD Project Manager and will accompany the monthly payment reimbursement request unless otherwise approved by the HRSD Project Manager.

3. An example simplified schedule is included in Attachment C (Excel) for PER phase, Design phase, Preconstruction phase, and Construction phase showing key involvement milestones and dates for HRSD personnel (other than the HRSD Project Manager). Examples of HRSD personnel include Real Estate Manager(s) for property matters and review of preconstruction assessment and damage mitigation plan; Electrical and Instrumentation staff involved with submittal reviews during PER / Design and various field verifications during construction and start-ups; and Operations staff for maintenance of plant / piping / pumping operations and verifications and activities associated with construction Substantial Completion and Final Completion milestones. Each prepared and updated project phase schedule to show activities that require HRSD personnel involvement clearly denoted such that HRSD can plan when various staff will need to be available for these identified tasks and activities.

   a. The appropriate project stage schedule for each CIP project to be created, updated, and to accompany the monthly payment reimbursement request. The project schedule will be in format as approved by the HRSD Project Manager.

4. An Excel template for estimating total Project Budget is included in Attachment D. This template is to be used and submitted at each project phase milestone either as a stand-alone table or included in a Study, PER, or similar report as directed by the HRSD Project Manager. An updated budget form will also be submitted to the HRSD Project Manager for each active CIP project the first week in January of each calendar year to assist HRSD in the annual CIP update cycle.

End of Section

Attachment A – Project Costs, Schedule, and Risks Report

CIP Baseline at Activity Start (June 1, 2015)

Capital Budget:

Phase	Costs	Details
Pre-planning:	$142,885	All project costs prior to start of PER.
PER:	$196,467	Professional Services costs as well as all other PER phase costs
Design:	$375,073	Professional Services costs, condition assessment, easements, as well as all other Design Phase costs
Pre-Construction:	$71,442	Bid stage activities
Construction:	$5,715,400	Includes CA/CI costs, construction contract, and all other construction phase costs
Estimated Program Cost:	$6,501,267	
Contingency (20%):	$1,143,080	Contingency set at 20%
Estimated Project Cost:	$7,644,347	

Schedule:

Phase	Schedule	Details
Pre-planning start:	June 2015	5-month duration
PER start:	November 2015	8-month duration
Design start:	July 2016	21-month duration
Pre-Construction start:	April 2018	4-month duration
Construction start:	August 2018	21-month duration
Project Completion:	May 2020	

Risk Assessment and Mitigation Discussion:

Phase	Risk Assessment	Risk Mitigation Consideration
Pre-planning:	Professional Services Selection delayed from original schedule by 1 month. Likely impact to remainder of schedule.	Evaluate compressing PER or Design phase to account for lost time.
PER:		
Design:		
Pre-Construction:		
Construction:		
Project Completion:		

Draft PER (February 15, 2016)

Updated Capital Budget:

Phase	Revised Costs	% Change from CIP Baseline	Details
Pre-planning:	$0	-100%	Delta: -$142,885. The earlier anticipated costs for this phase were reassigned under Design.
PER:	$250,000	+27%	Delta: +$53,533. Negotiated PER work including Additional Services for SUE and meetings with Virginia Beach, Norfolk, and other stakeholders.
Design:	$550,000	+47%	Delta: +$174,927. Incorporation of additional pipe condition assessment and hydraulic modeling for alternate pipe diameters.
Pre-Construction:	$25,000	-65%	Delta: -$46,442. Closer estimate of costs to be expended during Construction bid and award stage.
Construction:	$7,000,000	+20%	Delta: +$1,284,600. Complexity of construction along corridor and alternatives.
Estimated Program Cost:	$7,825,000	+20%	Delta: +$1,323,733.
Contingency (20%):	$1,565,000	+37%	Delta: +$421,920.
Estimated Project Cost:	$9,393,000	+23%	Delta: +$1,745,653.

Updated Schedule:

Phase	Revised Schedule	% Change from CIP Baseline	Details
Pre-planning start:	July 2015	0%	Delta: +1 month from baseline date.
PER start:	December 2015	0%	Delta: +1 month from baseline date. Same duration as baseline between pre-planning and PER start.
Design start:	August 2016	0%	Delta: +1 month from baseline date. Same duration as baseline for PER phase.
Pre-Construction start:	October 2017	-28%	Delta: -6 months from baseline date. Duration reduced to 15 months from baseline duration of 21 months for Design phase to reach bid ready stage.
Construction start:	February 2018	0%	Delta: -6 months from baseline date. Same duration as baseline for pre-construction phase.
Project Completion:	February 2020	+14%	Delta: -3 months from baseline date. Duration is 3 months longer than the baseline Construction phase of 21 months due to constructability issues.

Risk Assessment and Mitigation Discussion:

Phase	Risk Assessment	Risk Mitigation Consideration
Pre-planning:	Closed out	

PER:	Several alternative routes identified in the PER that have higher projected construction costs and longer construction schedules as compared to the preliminary recommended route and pipe length.	Explore alternate construction means and methods to reduce cost.
Design:		
Pre-Construction:		
Construction:	Depending on the pipe alignment selected by HRSD, the construction could result in higher traffic disruption and therefore limited work hours / days by either Norfolk or Virginia Beach.	Coordinate with locality traffic maintenance group to clarify expectations and collaborate on construction duration reducing opportunities.
Project Completion:		

Final PER (July 1, 2016)

Updated Capital Budget:

Phase	Revised Costs	% Change from CIP Baseline	Details
Pre-planning:	$0	-100%	Delta: -$142,885. The earlier anticipated costs for this phase were reassigned under Design.
PER:	$250,000	+27%	Delta: +$53,533. Negotiated PER work including Additional Services for SUE and meetings with Virginia Beach, Norfolk, and other stakeholders.
Design:	$550,000	+47%	Delta: +$174,927. Incorporation of additional pipe condition assessment and hydraulic modeling for alternate pipe diameters.
Pre-Construction:	$25,000	-65%	Delta: -$46,442. Closer estimate of costs to be expended during Construction bid and award stage.
Construction:	$7,200,000	+26%	Delta: +$1,484,600. A pipe alignment selected by HRSD from PER alternatives that added more length to avoid future O&M issues.
Estimated Program Cost:	$8,025,000	+23%	Delta: +$1,523,733.
Contingency (15%):	$1,203,750	+5%	Delta: +$60,670. Contingency adjusted to 15%.
Estimated Project Cost:	$9,228,750	+21%	Delta: +$1,584,403.

Updated Schedule:

Phase	Revised Schedule	% Change from CIP Baseline	Details
Pre-planning start:	July 2015	0%	Delta: +1 month from baseline date.
PER start:	December 2015	0%	Delta: +1 month from baseline date. Same duration as baseline between pre-planning and PER start.
Design start:	August 2016	0%	Delta: +1 month from baseline date. Same duration as baseline for PER phase.
Pre-Construction start:	October 2017	-28%	Delta: -6 months from baseline date. Duration reduced to 15 months from baseline duration of 21 months for Design phase to reach bid ready stage.
Construction start:	February 2018	0%	Delta: -6 months from baseline date. Same duration as baseline for pre-construction phase.
Project Completion:	February 2020	+14%	Delta: -3 months from baseline date. Duration is 3 months longer than the baseline Construction phase of 21 months due to constructability concerns.

Risk Assessment and Mitigation Discussion:

Phase	Risk Assessment	Risk Mitigation Consideration
Pre-planning:	Closed out	
PER:	Closed out	
Design:	The timing for construction of the new Outlet Mall and access road may create coordination issues and adjustments for the design phase.	
Pre-Construction:		
Construction:	The timing for construction of the new Outlet Mall and access road may create coordination issues and adjustments for the construction phase. Construction could result in higher traffic disruption and therefore limited work hours / days by either Norfolk or Virginia Beach.	Coordinate with Developer and Locality to clarify expectations and collaborate on construction duration reductions and ways to lessen anticipated disruptive construction impacts.
Project Completion:	Issues discussed above may delay project completion.	

90% Design (August 1, 2017)

Updated Capital Budget:

Phase	Revised Costs	% Change from CIP Baseline	Details
Pre-planning:	$0	-100%	Delta: -$142,885. The earlier anticipated costs for this phase were reassigned under Design.
PER:	$250,000	+27%	Delta: +$53,533. Negotiated PER work including Additional Services for SUE and meetings with Virginia Beach, Norfolk, and other stakeholders.
Design:	$580,000	+55%	Delta: +$204,927. Incorporation of additional pipe condition assessment, hydraulic modeling for alternate pipe diameters, detailed traffic maintenance plans for both Norfolk and Va Beach.
Pre-Construction:	$25,000	-65%	Delta: -$46,442. Closer estimate of costs to be expended during Construction bid and award stage.
Construction:	$7,200,000	+26%	Delta: +$1,484,600. A pipe alignment selected by HRSD from PER alternatives that added more length to avoid future O&M issues.
Estimated Program Cost:	$8,055,000	+24%	Delta: +$1,553,733.
Contingency (10%):	$805,500	-30%	Delta: -$337,580. Contingency adjusted to 10%.
Estimated Project Cost:	$8,860,500	+16%	Delta: +$1,216,153.

Updated Schedule:

Phase	Revised Schedule	% Change from CIP Baseline	Details
Pre-planning start:	July 2015	0%	Delta: +1 month from baseline date.
PER start:	December 2015	0%	Delta: +1 month from baseline date. Same duration as baseline between pre-planning and PER start.
Design start:	August 2016	0%	Delta: +1 month from baseline date. Same duration as baseline for PER phase.
Pre-Construction start:	October 2017	-24%	Delta: -5 months from baseline date. One month added to Design duration evaluated at Final PER for total of 16 months for additional review times for Norfolk and Virginia Beach.
Construction start:	March 2018	0%	Delta: -5 months from baseline date. Same duration as baseline for pre-construction phase.
Project Completion:	March 2020	+14%	Delta: -2 months from baseline date. Duration is 3 months longer than the baseline Construction phase of 21 months due to constructability concerns.

Risk Assessment and Mitigation Discussion:

Phase	Risk Assessment	Risk Mitigation Consideration
Pre-planning:	Closed out	
PER:	Closed out	
Design:	Final review and approval by cities of Norfolk and Virginia Beach.	Clarify with locality the plan approval process.
Pre-Construction:		
Construction:	The timing for construction of the new Outlet Mall and access road will create coordination issues during the construction phase if changes by either HRSD contractor or developer of outlet mall from current state. Construction could result in higher traffic disruption and therefore limited work hours / days by either Norfolk or Virginia Beach.	Consider frequent meetings between locality, developer team, and HRSD team to heighten opportunities for early knowledge of conflicting matters and schedules for collaboration decisions.
Project Completion:	Issues discussed above may delay project completion.	

PreConstruction (October 1, 2017)

Updated Capital Budget:

Phase	Revised Costs	% Change from CIP Baseline	Details
Pre-planning:	$0	-100%	Delta: -$142,885. The earlier anticipated costs for this phase were reassigned under Design.
PER:	$250,000	+27%	Delta: +$53,533. Negotiated PER work including Additional Services for SUE and meetings with Virginia Beach, Norfolk, and other stakeholders.
Design:	$580,000	+55%	Delta: +$204,927. Incorporation of additional pipe condition assessment, hydraulic modeling for alternate pipe diameters, detailed traffic maintenance plans for both Norfolk and VA Beach.
Pre-Construction:	$21,000	-71%	Delta: -$50,442. Actual expenditures.
Construction:	$7,003,000	+23%	Delta: +$1,287,600. New figures based on OPCC and construction schedule.
Estimated Program Cost:	$7,854,000	+20%	Delta: +$1,352,733.
Contingency (5%):	$392,700	-64%	Delta: -$750,380. Contingency adjusted to 5%.
Estimated Project Cost:	$8,246,700	+8%	Delta: +$602,353.

Updated Schedule:

Phase	Revised Schedule	% Change from CIP Baseline	Details
Pre-planning start:	July 2015	0%	Delta: +1 month from baseline date.
PER start:	December 2015	0%	Delta: +1 month from baseline date. Same duration as baseline between pre-planning and PER start.
Design start:	August 2016	0%	Delta: +1 month from baseline date. Same duration as baseline for PER phase.
Pre-Construction start:	October 2017	-24%	Delta: -5 months from baseline date. One month added to Design duration evaluated at Final PER for total of 16 months for additional review times for Norfolk and Virginia Beach.
Construction start:	March 2018	0%	Delta: -5 months from baseline date. Same duration as baseline for pre-construction phase.
Project Completion:	December 2019	+5%	Delta: -5 months from baseline date. Duration is 1 month longer than the baseline Construction phase of 21 months due to Bid Document allowable duration.

Risk Assessment and Mitigation Discussion:

Phase	Risk Assessment	Risk Mitigation Consideration

Pre-planning:	Closed out	
PER:	Closed out	
Design:	Final review and approval by cities of Norfolk and Virginia Beach.	Clarify with locality the plan approval process.
Pre-Construction:		
Construction:	The timing for construction of the new Outlet Mall and access road will create coordination issues during the construction phase if changes by either HRSD contractor or developer of outlet mall. Construction could result in higher traffic disruption and therefore limited work hours / days by either Norfolk or Virginia Beach.	Consider frequent meetings between locality, developer team, and HRSD team to heighten opportunities for early knowledge of conflicting matters and schedules for collaboration decisions.
Project Completion:	Issues discussed above may delay project completion.	

Evaluation of Construction Bids (November 1, 2017)

Updated Capital Budget:

Phase	Revised Costs	% Change from CIP Baseline	Details
Pre-planning:	$0	-100%	Delta: -$142,885. The earlier anticipated costs for this phase were reassigned under Design.
PER:	$250,000	+27%	Delta: +$53,533. Negotiated PER work including Additional Services for SUE and meetings with Virginia Beach, Norfolk, and other stakeholders.
Design:	$580,000	+55%	Delta: +$204,927. Incorporation of additional pipe condition assessment, hydraulic modeling for alternate pipe diameters, detailed traffic maintenance plans for both Norfolk and VA Beach.
Pre-Construction:	$21,000	-71%	Delta: -$50,442. Actual expenditures.
Construction:	$6,927,150	+21%	Delta: +$1,211,750. Lowest responsible and responsive bid was less than OPCC.
Estimated Program Cost:	$7,778,150	+20%	Delta: +$1,276,883.
Contingency (5%):	$388,908	-66%	Delta: -$754,172. Contingency held at 5%.
Estimated Project Cost:	$8,167,058	+7%	Delta: +$522,711.

Updated Schedule:

Phase	Revised Schedule	% Change from CIP Baseline	Details
Pre-planning start:	July 2015	0%	Delta: +1 month from baseline date.
PER start:	December 2015	0%	Delta: +1 month from baseline date. Same duration as baseline between pre-planning and PER start.
Design start:	August 2016	0%	Delta: +1 month from baseline date. Same duration as baseline for PER phase.
Pre-Construction start:	October 2017	-24%	Delta: -5 months from baseline date. One month added to Design duration evaluated at Final PER for total of 16 months for additional review times for Norfolk and Virginia Beach.
Construction start:	March 2018	0%	Delta: -5 months from baseline date. Same duration as baseline for pre-construction phase.
Project Completion:	December 2019	+5%	Delta: -5 months from baseline date. Duration is 1 month longer than the baseline Construction phase of 21 months due to Bid Document allowable duration.

Risk Assessment and Mitigation Discussion:

Phase	Risk Assessment	Risk Mitigation Consideration

Pre-planning:	Closed out	
PER:	Closed out	
Design:	Closed out	
Pre-Construction:	Closed out	
Construction:	The timing for construction of the new Outlet Mall and access road will create coordination issues during the construction phase if changes by either HRSD contractor or developer of outlet mall. Construction could result in higher traffic disruption and therefore limited work hours / days by either Norfolk or Virginia Beach.	Consider frequent meetings between locality, developer team, and HRSD team to heighten opportunities for early knowledge of conflicting matters and schedules for collaboration decisions.
Project Completion:	Issues discussed above may delay project completion.	

Mid Point of Construction (January 1, 2019)

Updated Capital Budget:

Phase	Revised Costs	% Change from CIP Baseline	Details
Pre-planning:	$0	-100%	Delta: -$142,885. The earlier anticipated costs for this phase were reassigned under Design.
PER:	$250,000	+27%	Delta: +$53,533. Negotiated PER work including Additional Services for SUE and meetings with Virginia Beach, Norfolk, and other stakeholders.
Design:	$580,000	+55%	Delta: +$204,927. Incorporation of additional pipe condition assessment, hydraulic modeling for alternate pipe diameters, detailed traffic maintenance plans for both Norfolk and VA Beach.
Pre-Construction:	$21,000	-71%	Delta: -$50,442. Actual expenditures.
Construction:	$7,027,150	+23%	Delta: +$1,311,750. Approved Change Orders of $30,000 (Owner Requested) and $70,000 (field changes).
Estimated Program Cost:	$7,878,150	+21%	Delta: +$1,376,883.
Contingency (5%):	$393,908	-65%	Delta: -$749,172. Contingency held at 5%.
Estimated Project Cost:	$8,272,058	+8%	Delta: +$627,711.

Updated Schedule:

Phase	Revised Schedule	% Change from CIP Baseline	Details
Pre-planning start:	July 2015	0%	Delta: +1 month from baseline date.
PER start:	December 2015	0%	Delta: +1 month from baseline date. Same duration as baseline between pre-planning and PER start.
Design start:	August 2016	0%	Delta: +1 month from baseline date. Same duration as baseline for PER phase.
Pre-Construction start:	October 2017	-24%	Delta: -5 months from baseline date. One month added to Design duration evaluated at Final PER for total of 16 months for additional review times for Norfolk and Virginia Beach.
Construction start:	March 2018	0%	Delta: -5 months from baseline date. Same duration as baseline for pre-construction phase.
Project Completion:	January 2020	+10%	Delta: -4 months from baseline date. Duration is 2 months longer than the baseline Construction phase of 21 months due to Bid Document allowable duration + 30 day CO time extension.

Risk Assessment and Mitigation Discussion:

Phase	Risk Assessment	Risk Mitigation Consideration
Pre-planning:	Closed out	
PER:	Closed out	
Design:	Closed out	
Pre-Construction:	Closed out	
Construction:	Likelihood of addition change orders for time extension and costs due to conflicts with undocumented private utilities along the force main corridor.	Evaluation of additional subsurface explorations ahead of Contractor's installation crews to heighten efficiency.
Project Completion:	Issues discussed above may delay project completion.	

Construction Closeout (February 1, 20209)

Updated Capital Budget:

Phase	Revised Costs	% Change from CIP Baseline	Details
Pre-planning:	$0	-100%	Delta: -$142,885. The earlier anticipated costs for this phase were reassigned under Design.
PER:	$250,000	+27%	Delta: +$53,533. Negotiated PER work including Additional Services for SUE and meetings with Virginia Beach, Norfolk, and other stakeholders.
Design:	$580,000	+55%	Delta: +$204,927. Incorporation of additional pipe condition assessment, hydraulic modeling for alternate pipe diameters, detailed traffic maintenance plans for both Norfolk and VA Beach.
Pre-Construction:	$21,000	-71%	Delta: -$50,442. Actual expenditures.
Construction:	$7,127,150	+25%	Delta: +$1,411,750. Additional approved Change Orders of $60,000 (field changes) plus additional $40,000 in CA/CI for approved time extension.
Estimated Program Cost:	$7,978,150	+22%	Delta: +$1,476,883.
Contingency (0%):	$0	-100%	Delta: -$1,143.080. No contingencies.
Estimated Project Cost:	$7,978,150	+4%	Delta: +$333,803.

Updated Schedule:

Phase	Revised Schedule	% Change from CIP Baseline	Details
Pre-planning start:	July 2015	0%	Delta: +1 month from baseline date.
PER start:	December 2015	0%	Delta: +1 month from baseline date. Same duration as baseline between pre-planning and PER start.
Design start:	August 2016	0%	Delta: +1 month from baseline date. Same duration as baseline for PER phase.
Pre-Construction start:	October 2017	-24%	Delta: -5 months from baseline date. One month added to Design duration evaluated at Final PER for total of 16 months for additional review times for Norfolk and Virginia Beach.
Construction start:	March 2018	0%	Delta: -5 months from baseline date. Same duration as baseline for pre-construction phase.
Project Completion:	February 2020	+14%	Delta: -3 months from baseline date. Duration is 3 months longer than the baseline Construction phase of 21 months due to Bid Document allowable duration + 60 day CO time extension.

Risk Assessment and Mitigation Discussion:

Phase	Risk Assessment	Risk Mitigation Consideration
Pre-planning:	Closed out	
PER:	Closed out	
Design:	Closed out	
Pre-Construction:	Closed out	
Construction:	Closed out	
Project Completion:		Document and incorporate lessons learned for planned and future projects.

Attachment B – Project Estimate History and OPCC Classification Report

CIP Project Name
CIP Project Number – Cost History and OPCC Report

Stage of Estimate	PER Costs	Design Costs	Bid Phase Costs	Construction Administration Costs	Construction Inspection Costs	Construction Costs	Total Costs
Initial Budget Development [Class 5]							
Final PER [Class 4]							
Preliminary Design [Class 3]							
Pre-Final Design [Class 2]							
Construction Bid Advertisement [Class 1]							

Round all estimates to nearest $1000.

Project Name
Project CIP Number
Project Phase PER

Task Description	Duration (days)	Start	Finish	Jan-23	Feb-23	Mar-23	Apr-23	May-23	Jun-23	Jul-23	Aug-23	Sep-23	Oct-23
Notice to Proceed	1	**1/5/2023**	1/6/2023										
Project Kickoff	30	1/6/2023	2/5/2023										
Alternatives Evaluation	60	2/5/2023	4/6/2023										
Technical Memorandum Preparation	30	4/6/2023	5/6/2023										
HRSD Review Period	30	**5/6/2023**	**6/5/2023**										
Draft PER Preparation	60	6/5/2023	8/4/2023										
HRSD Review Period	30	**8/4/2023**	**9/3/2023**										
Final PER Preparation and Submittal	30	9/3/2023	########										

Project Name
Project CIP Number
Project Phase Design

Task Description	Duration (days)	Start	Finish	Jan-23	Feb-23	Mar-23	Apr-23	May-23	Jun-23	Jul-23	Aug-23	Sep-23	Oct-23	Nov-23	Dec-23	Jan-24
Notice to Proceed	1	**1/5/2023**	1/6/2023													
Survey / SUE / Geotechnical	60	1/6/2023	3/7/2023													
Hydraulic Evaluation / Basis of Design	30	3/7/2023	4/6/2023													
50% Design Development	60	4/6/2023	6/5/2023													
HRSD Review Period	30	**6/5/2023**	**7/5/2023**													
Review Draft Preconstruction Assesment	15	**8/15/2023**	**9/1/2023**													
90% Design Development	60	7/5/2023	9/3/2023													
HRSD Review Period	30	**9/3/2023**	**########**													
100% Design Development	30	10/3/2023	11/2/2023													
Review Final Preconstruction Assessment	15	**#########**	**########**													
HRSD Review Period	30	**11/2/2023**	**########**													
Bid Ready Plan Submittal	30	12/2/2023	1/1/2024													

Project Name
Project CIP Number
Project Phase Pre-Construction

Task Description	Duration (days)	Start	Finish	Jan-23	Feb-23	Mar-23	Apr-23
Advertise for Construction Bids	1	**1/5/2023**	1/6/2023				
Site Visit / Issue Addendum	30	1/6/2023	2/5/2023				
Bid Opening	1	2/5/2023	2/6/2023				
Evaluation of Bids	2	2/6/2023	2/8/2023				
Commission Agenda Preparation	21	2/8/2023	3/1/2023				
Issue Notice of Award	7	3/1/2023	3/8/2023				
Issue Notice to Proceed	30	3/8/2023	4/7/2023				
Contractor Kickoff Meeting	1	**4/7/2023**	**4/8/2023**				**#**

Project Name
Project CIP Number
Project Phase Construction

Task Description	Duration (days)	Start	Finish	Jan-23	Feb-23	Mar-23	Apr-23	May-23	Jun-23	Jul-23	Aug-23	Sep-23	Oct-23	Nov-23	Dec-23	Jan-24	Feb-24	Mar-24	Apr-24	May-24	Jun-24	Jul-24
Notice to Proceed	1	**1/5/2023**	1/6/2023																			
Submittals Preparation, Review, Approval	90	1/6/2023	4/6/2023																			
Material/Equipment Order and Delivery	90	4/6/2023	7/5/2023																			
Mobilization / Site Clearing	30	7/5/2023	8/4/2023																			
Site Work / Construction Activities	120	8/4/2023	12/2/2023																			
HRSD Involvement with Start-up & Testing	30	**12/2/2023**	**1/1/2024**																			
Construction Activities for Substantial Completion Milestone	60	1/1/2024	3/1/2024																			
Substantial Completion Verifications (HRSD Assistance)	30	**3/1/2024**	**3/31/2024**																			
Final Completion Verifications (HRSD Assistance)	30	**3/31/2024**	**4/30/2024**																			
Project Closeout Stage	60	4/30/2024	6/29/2024																			

Project Stage:
OPCC Class:
ENR CCI #:
Date of OPCC:

Overall Project Budget Summary	Item Cost		Basis of Cost
PER Phase			
Consultant PER / Study Fees	$	-	5% OPCC until actual fee established
Contingencies / Allowances	$	-	
Design Phase			
Consultant Design Fees	$	-	10% OPCC until actual fee established
Real Estate / Easement Costs	$	-	
Real Estate Related Services Costs	$	-	
CMAR Design Stage Related Fees (if applicable)	$	-	
Contingencies / Allowances	$	-	
Preconstruction Phase			
Consultant Fees	$	-	1% OPCC until actual fee established
CMAR GMP Preparation Fees (if applicable)	$	-	
Contingencies / Allowances	$	-	
Construction Phase			
Consultant Construction Admin Fees	$	-	5% OPCC until actual fee established
Consultant Construction Inspection Fees	$	-	4% OPCC until actual fee established
CMAR Post-GMP Costs (if applicable)	$	-	
Contractor Construction Costs (OPCC)	$	-	
Contingencies / Allowances	$	-	
Close-out Phase			
Costs prior to expiration of Warrenty Phase	$	-	0.5% OPCC
Contingencies / Allowances	$	-	

Budget Total:	$	-
Recommended OPCC escalation costs for inclusion:	$	-
Recommended market volatility costs for inclusion:	$	-

Notes for Budget Preparer:

Briefly describe the Basis of Cost for each applicable item included in the Budget Table above

Include recommended OPCC escalation cost and market volatility cost along with a basis for these recommended costs.

Exercise good judgement in applying contingencies and allowances to avoid excessive contingencies. Need to describe these suggested contingencies and/or allowances.

Section 6 - Drawings, Record Drawings and Valve Guides

A. Introduction – HRSD has in excess of 40,000 Record Drawings in an electronic form which are archived in a records management system . Many older drawings are in scanned (raster) format. Most of the recent drawings and all valve guides are in AutoCAD format. Some drawings are hybrid images. HRSD accepts Record Drawings only in AutoCAD format unless otherwise approved by the HRSD GIS Manager. Record Drawings must be provided in full-scale paper copy, Adobe Acrobat (PDF), and AutoCAD format up to the latest release used by HRSD at the time Record Drawings are received. The latest release is provided in each Request For Proposal (RFP). To provide some uniformity and to assist HRSD with its records management system, certain criteria have been established as described in the Section. The FIRM must submit an electronic copy of the conformed plans in.PDF to HRSD at the time of pre-construction meeting. This will allow HRSD to enter the plans into the records management system, verify compliance with HRSD standards and print copies for internal use during the construction phase of the project. HRSD has not adopted a mandatory layering system for contract drawings. However, the FIRM must submit a listing of the proposed layering system to HRSD for review prior to beginning drawing preparation. Layers containing new or improved HRSD infrastructure must only contain such infrastructure and must be clearly identified in the layer listing (the FIRM is encouraged to use a prefix of HRSD_ for layers representing new or improved HRSD infrastructure). Due to the frequent need to modify valve guides, the layering system listed in the Valve Guide section below must be used in the preparation of valve guides. The FIRM must submit an electronic copy of the final record drawings in .DWG and .PDF at the final project completion stage. Once Record Drawings are received, approved and inputted, the advertised set will be deleted from the records management system.

B. Drawings

1. Size - Use 24 inch x 36 inch sheets. Prefer to limit actual area used to 22 inches x 34 inches to allow for true scale half size printing on an 11 inch x 17 inch page.

2. Scale - Use a scale for the plan view of gravity sewers and force mains of one inch equals 20 feet for urban areas and one inch equals 40 feet for rural areas or as appropriate. Indicate vertical scale on each profile view.

   a. Pipelines

      i. 1 inch = 40 feet in rural or low development areas
      ii. 1 inch = 20 feet in urban or high development areas
      iii. Use small scale for details

   b. Pump Stations and Treatment Plants – Site plans shall be at one inch = 20 feet

   c. Fonts - Use minimum letter size of one-tenth (1/10) inch to allow for good resolution when viewing drawings and for drawing use at half-size.

d. Units - Drawings shall be prepared using English units (non-metric).

3. Title Block

   a. Locate across the bottom or right hand margin with the sheet number in the extreme lower right hand corner.

   b. Information – Include:

      i. Project title
      ii. Drawing title
      iii. Sheet number
      iv. FIRM's name
      v. Scale and graphical scale reference for one inch
      vi. Revision block

4. Required Sheets - Provide required sheets in the order listed as follows:

   a. Cover Sheet – Refer to Standard Details section in this manual.

   b. Location and Vicinity Map Sheet – Include datum and coordinate system used for design.

   c. Drawing Index Sheet – Index may be placed on cover or location sheet if the project includes less than 20 drawings. The Index Sheet must include the drawing number (ex: C-1), sheet number (a consecutive numbering scheme beginning with 1), and a drawing description (ex: “Yard Piping – Demolition Plan”).

   d. Legend Sheet – Include of all abbreviations and symbols used for design. Refer to Section 29 Treatment Plant in this manual for required plant process abbreviations.

   e. Schedule Sheets – Compile equipment schedules, door schedules, hardware schedules, cable and conduit schedules, panel board schedules etc., and place schedule sheets at front of respective sections of work.

   f. Electrical point to point diagrams – refer to Section 30 Electrical and Instrumentation in this manual.

   g. Hydraulic Profile – For treatment plant projects plot the hydraulic grade line for each condition considered during design.

   h. Detail Sheets – Compile civil details, electrical details, mechanical details, structural details, etc., and place detail sheets at end of respective sections of work.

5. Electronic Drawing Format

a. All design drawings shall be prepared in an electronic format using AutoCAD (.DWG) format. The release number is identified in the Request for Proposals (RFP). The FIRM shall review with HRSD any proposed deviation in the version of AutoCAD to be used and any other third party or proprietary software programs which will be used to prepare the design drawings. HRSD reserves the right to reject any variation in the version of AutoCAD to be used, non-standard AutoCAD format or specialty software program proposed by the FIRM.

   Exceptions to this requirement will be considered for projects where 3D modeling has been approved in accordance with Section 7 – "HRSD Building Information Model (BIM) Requirements".

b. HRSD does not require the use of a standard layering scheme for the preparation of electronic Record Drawings. The FIRM shall provide a file listing each layer name, description and color (pen weight) with each electronic file provided. Layers containing new or improved HRSD infrastructure must only contain such infrastructure, and must be clearly identified in the layer listing (the FIRM is encouraged to use a prefix of HRSD_ for layers representing new or improved HRSD infrastructure). Line widths shall be designated by layer and not by color. Provide the associated .CTB file with each project/drawing.

   Exceptions to this requirement will be considered for projects where 3D modeling has been approved in accordance with Section 7 – "HRSD Building Information Model (BIM) Requirements".

c. The use of x-referencing when preparing electronic drawings is acceptable. Prior to the submission of any electronic drawing to HRSD, each x-referenced dwg file associated with a drawing shall be bound to that file. Referenced images (TIFF, JPEG, etc…) within the electronic drawing must also be embedded. Unbound electronic drawings will be returned to the FIRM for revision. The final delivered bound AutoCAD files must be of a manageable size for use in Meridian (files should not exceed 20MB). Also refer to section C.1.j. for clarification in regards to file size for individual sheets.

d. The use of stick-on maps, diagrams or sketches shall not be allowed. All information shown on the paper copy drawing should correspond to the electronic file provided as part of the Record Drawing submission.

e. The FIRM shall provide to HRSD all font files used within the electronic drawings. The use of non-standard AutoCAD fonts is strongly discouraged.

f. For pipeline projects, at the conformed stage, the FIRM shall provide to HRSD a single AutoCAD file (.DWG) containing the proposed HRSD infrastructure (also referred to as a "seamless file"); the .DWG file must capture the proposed HRSD infrastructure at its true State Plane Coordinates (as specified herein). Proposed Valve Guide locations should also be shown in this single AutoCAD file; the

proposed Valve Guide locations should be represented as squares/rectangles in their true coordinate location, estimating the extent of the areas to be represented by the Valve Guide. This AutoCAD file will serve as an early coordination tool to determine eventual line number(s) and Valve Guide number(s).

6. Drawing and Electronic File Naming

   a. Each drawing shall be provided with both a sheet number and a drawing number. A sheet number is a consecutive numbering scheme beginning with 1. A drawing number is an alphanumeric numbering scheme beginning with the discipline designation and a consecutive number (i.e.; C-1, M-12, S-93, etc.)

   b. Each electronic drawing file shall be named as follows:

      i. Index sheet – Index.dwg
      ii. All other sheets – SHEETNUMBER.dwg (i.e., Sheet 05 of 35.dwg)

   c. In the case of Meridian 'hybrid' drawings, each referenced file shall be named in correspondence to the drawing within which it is referenced. (i.e., a referenced image file would be named "Sheet 05 of 35 A.tiff" if it is x-referenced in Sheet 05 of 35.dwg)

7. Miscellaneous

   a. Labels and Symbols

      i. Identify and label all existing facilities and underground utilities.
      ii. Use standard symbols and terminology consistently throughout drawings.
      iii. Shading, stippling or cross-hatching is acceptable only if drawing clarity on half size prints is approved by HRSD. The use of solid fills for shading is not acceptable.

   b. Drawing Orientation

      i. North arrow orientation should be up or to the right on each drawing.
      ii. Pipeline stationing should be left to right on each drawing.

   c. Piping and Hydraulic Structures

      i. Indicate pipe sizes and materials at transitions between different pipe sizes and materials.
      ii. Indicate elevations and grades of gravity sewers including pipe inverts at manholes, manhole rims, and other key points along the gravity sewer.
      iii. Indicate elevations of force mains including pipe inverts at changes in grade and other key points along the force main.

iv. Indicate elevations of hydraulic structures including floor elevations and water surface elevations.
v. Prepare line diagrams for process systems and isometric schematics for complicated piping systems.
vi. For pipeline projects tying into existing pipelines, such as repairs or relocations, the connecting point between the new and existing pipelines must reference the stationing from the original drawings.
vii. Indicate pipeline stationing based on the pipeline centerline. Stations should be indicated on both the plan and profile views.
viii. For pipeline projects, a profile and related data should be shown on the bottom half of the plan sheet, indicating the pipeline stationing on accented vertical grid lines. The profile should be shown at true pipeline centerline length and projected above to the plan view in as close a relationship as possible.

d. Electrical – FIRM to confirm that these requirements are included in the Bid Documents for Contractors.

i. Process and Instrumentation Diagrams (P&IDs) – The FIRM shall prepare the P&IDs.
ii. Loop Drawings – The Contractor shall be required to provide loop drawings.
iii. Conduit and Cable Schedules – The FIRM shall provide on the drawings or in the specifications. Contractor shall provide as-built conduit and cable schedules.
iv. Point to Point Drawings – Contractor to provide.

e. Horizontal and Vertical Controls

i. For all outfalls provide the following:
a) Longitude and latitude for the beginning and end of the diffuser.
b) Longitude and latitude for the point where the outfall enters the body of water.
c) Longitude and latitude at all pipe deflections.
d) Distance in feet from the end of the diffuser to the shoreline.
e) Provide layout information tied to the Virginia State Plane coordinate system. For pipeline projects a minimum of two Virginia State Plane coordinates should be indicated on the drawing. Horizontal datum including the realization (also known as the adjustment) used should be referenced on the cover sheet. (e.g. NAD83(CORS96)).
f) Indicate location of bench marks and use elevations based on the NAVD88 vertical datum, unless otherwise approved. Vertical datum reference should be indicated on each profile view.
g) Provide Virginia State Plane horizontal coordinates and NAVD88 elevations for valve boxes, air vents, manholes, pipeline bends, and other critical items.

8. Drawing Designations – The following drawing designations shall be used:

a. General
b. Index
c. Civil
d. Structural
e. Architectural
f. Electrical
g. I & C
h. Mechanical
i. HVAC – Plumbing

C. Record Drawings

1. General

a. Indicate revised dimensions, annotations, coordinates, and elevations as specified in this section. Only dimensions, coordinates, and elevations depicting as-built conditions to appear on the final Record Drawings. Record Drawings are not to contain “mark-ups”, text strikethrough, etc. (only final as-built conditions).

b. Indicate added and/or revised construction details. Only final version of construction details are to be included in the Record Drawings.

c. Remove wording and annotations on drawings that do not relate to the as-built conditions (such as "Proposed") as appropriate.

d. Revise all drawings to reflect as built conditions of all equipment or other schedules.

e. Label drawings as "Record Drawings" and indicate last revision date.

f. Prepare and submit a full-scale set of black line drawings.

g. Submit CAD drawing files (including the listing of all layer names as specified herein, and font files) compatible with AutoCAD Release (as specified in the RFP) software. Later editions cannot be accepted without prior written agreement from HRSD.

Exceptions to this requirement will be considered for projects where 3D modeling has been approved in accordance with Section 7 – “HRSD Building Information Model (BIM) Requirements”.

h. Submit PDF format file copies of the CAD drawing files.

i. An engineer’s seal is not required on the Record Drawings.

j. A single drawing file shall be provided for each sheet of the Record Drawings. Delete all extraneous parts of the project from the drawing file except what pertains to the immediate sheet. This reduces the file size and works better in HRSD's records management system. No individual file should exceed 20MB.

   Exceptions to this requirement will be considered for projects where 3D modeling has been approved in accordance with Section 7 – "HRSD Building Information Model (BIM) Requirements".

2. Construction Information

   a. List Contractor name, address, telephone number and point of contact on the cover sheet.

   b. For pipeline projects list suppliers and model numbers/designations of all major items of construction.

D. Bid Documents

1. Provide final Bid Documents with all incorporated addenda in a PDF format file for incorporation into Meridian Software.

E. Valve Guides

1. Introduction

   a. HRSD uses Valve Guides to locate critical facilities in the interceptor system. The goal of each Valve Guide is to provide a location diagram and valve information for operations, maintenance and emergency shutdowns.

   b. Valve Guides are prepared for valves, air vents, leak detectors, meter installations, cathodic protection test stations, and other corrosion control equipment. Manholes used in sanitary sewer systems do not require the preparation of a Valve Guide.

   c. Valve Guides are prepared in an electronic drawing format for records management and internal use by HRSD.

2. Specific Instructions

   a. Valve Guides shall be prepared at 8.5 inch x 11 inch size drawings with the drawing limits set to 8.5 inch x 11 inch (See Attachment A in this section for examples). All elements to be drawn in model space. A Valve Guide Template file including the appropriate paper space layout to be provided by HRSD.

b. Pipeline size and material to be annotated. Abandoned pipelines/valves/etc. that remain in place to be indicated as abandoned.

c. Provide only enough information to locate the valve(s) and/or air vent(s). Additional information should not be provided.

d. Provide a minimum of two (2) and preferably three (3) tie-down dimensions, from the valve or air vent to an adjacent, permanent fixture.

e. Valve Guides are identified using a sequential numbering system. The FIRM must coordinate with HRSD for the determination of interim and final Valve Guide numbers. Each valve, air vent, etc. are also numbered using a sequential numbering system within each Valve Guide. In cases where an existing Valve Guide is being updated, the FIRM must coordinate with HRSD for the determination of interim and final valve numbers.

f. Valve Guide drawings shall be prepared in an AutoCAD (.DWG) format (release as referenced in the RFP). Any associated files (font, compression, etc.) should be included with the drawings.

g. A single drawing file shall be provided with each individual Valve Guide.

3. CAD Standards

a. 0 Layer - Information appearing on the 0 layer shall conform to the following established standards:

   i. Layer Color - White (No. 7)
   ii. Valve Guide Drawing Sheet/Information Block
   iii. North Arrow (North Arrow HRSD Standard)
   iv. Pen Width = 0.012 inches

b. Text Layer - Information appearing on the Text Layer shall conform to the following established standards:

   i. Layer Color - Cyan (No. 4)
   ii. Valve Guide Information
      a) VG Number
         - Height - .20
         - Font - Romant
      b) Location (General area of valve)
         - Height - .10
         - Font - Romand
      c) Drawing (Line no., contract title and sheet no.)
         - Height - .10
         - Font - Romand

d) Line Number Symbol (Place in or near Drawing Title)

iii. General

a) Dimensions are considered to be text and shall be drawn on the text layer.

b) Text font and height for valve information (Valve No., Size, Turns, etc.) is established in information block and operator shall be prompted for insertion of data.

c) Street Names
- Height - .20
- Font - Romant

d) Stations Number (0+00)
- Height - Minimum .08
- Font - Romand

e) Notes
- Height - Minimum .08
- Font - Romand

f) Distance Table (If required on VG)
- Height - Minimum .08
- Font - Simplex

g) Dimension Text
- Height - Minimum .08
- Font - Simplex
- Location - (Place dimension text on top if space allows; otherwise use a break.)

c. Topo Layer - Information appearing on the Topo Layer shall conform to the following established standards:

i. Layer Color - Dark Gray (No. 8)

ii. General – Information drawn on the Topo Layer shall include the following:

a) Power Poles (Include identifying numbers)

b) Fire Hydrants

c) Other utilities only if they are relevant to the location of the valve or air vents, such as gravity manholes when used as a measurement marker.

d) Pavement limits, edge of pavement symbols, sidewalks, residences when such use will assist in location, trees and shrubbery, fences, HRSD easements, property lines if at PS locations, cross streets, dirt roads, and other pertinent data which will aid the locating of valve or air vent. A minimum number of symbols should be used where trees or shrubbery lines exist.

e) Text
- Height - Minimum .08
- Font - Simplex

f) Line Types
- Continuous - Pavement limits, sidewalks, cross street roadway limits, building limits.
- Hidden 2 - Dirt Roads

- Phantom - Property and Easements
- -••• - ••• - Ditch
- -x - x - Fences

iii. Pen Width = 0.002 inches

d. FM Layer - Information appearing on the FM Layer shall conform to the following established standards:

i. Layer Color – Green (No. 3)

ii. General – Information drawn on the FM Layer shall include the following.

a) HRSD force mains, air vents, valves, other force mains which connect directly to valved outlets or tapping saddles, valve vaults, pipe encasements, leak detectors, cathodic protection symbols, and check valves.

b) Line type
- HRSD FM - Continuous Polyline
- Other FM - As indicated.

c) Line width
- HRSD FM - .047" (for largest diameter on VG sheet. Vary width where FM reduces in size.)
- Others - Size smaller than HRSD according to difference in diameter.

d) Symbols - Standard HRSD symbols for valves, air vents, leak detectors, etc. Size valves relevant to diameter of force main.

iii. Pen Width = 0.016 inches

e. Detail Layer - Information appearing on the Detail Layer will conform to the following established standards:

i. Layer Color - White (No. 7)

ii. General

a) Information drawn on the Detail Layer should include:
- If required, a more detailed drawing of connection to the HRSD force main showing fittings, changes in elevation, and any special related conditions.
- Text related to the detail shall be drawn on the detail layer. Text shall be minimum .08".

b) Line Types as indicated in the above CAD Standards.

c) Font - Romand (Use Simplex if contrast in style is necessary.)

iii. Pen Width = 0.012 inches

4. Abbreviation, Fonts and Standard Symbols

a. Abbreviations - The following list of abbreviations are required for use on all HRSD Valve Guides.

Item Description	Abbreviation
Air Vent	AV
Asbestos Cement Pipe	AC
Bulkhead	Bhd
Building	Bldg
Boulevard	Blvd
Cast Iron	CI
Cast Iron Mechanical Joint	CIMJ
Cable Antenna Television	CATV
Chemical	Chem
Clockwise	CW
Concrete	Conc
Corner	Cor
Corporation	Corp
Counterclockwise	CCW
Center	Ctr
Concrete Pipe	CP
Department	Dept
Department of Public Works	DPW
Diameter	Diam
Drive	Dr
Ductile Iron	DI
Ductile Iron Mechanical Joint	DIMJ
Fire Hydrant	FH
Elevation	Elev
Electric	Elec
Flanged	Flg
Force Main	FM
Interceptor Force Main	IntFM
Foot	Ft
Gallon	Gal
Government	Govt
Gravity	Grav
Height	Hgt
High Density Polyethylene Pipe	HPDE
Highway	Hwy
High School	HS
Horizontal	Horz
Horizontal Gate Valve	HGV
Inch	In
Invert	Inv
Light Pole	LP
Limit	Lim
Maximum	Max
Mechanical	Mech

Item Description	Abbreviation
Mechanical Joint	MJ
Mile	Mi
Minimum	Min
Outside Diameter	O.D.
Overhead Electric	OHE
Private	Priv
Property	Prop
Polyvinyl Chloride	PVC
Power	Pwr
Power Pole	PP
Reinforced Concrete	RC
Reinforced Concrete Cylinder Pipe	RCCP
Restrained Joint	RJ
River	Riv
Residence	Res
Right Of Way	ROW
Railway	Rwy
Railroad	RR
School	Sch
Sheet	Sht
Station	Sta
Steel Pipe	SP
Welded Steel Pipe	WSP
Surface	Sur
Valve Guide	VG
Vertical	Vert
Vertical Gate Valve	VGV
Underground	U/G
Underground Electrical	UGE
Without	W/O

Exhibit A

VALVE GUIDE FORMAT AND EXAMPLES

1. Standard Font
2. Valve Guide Example – AT-1019
3. Valve Guide Example – NA-3029
4. Valve Guide Example – VIP-7012

HAMPTON ROADS SANITATION DISTRICT
INTERCEPTOR SYSTEMS DEPARTMENT
VALVE GUIDE

NUMBER **AT-1019**

LOCATION SHIPPS CORNER PRS 143

DRAWING LINE 171 DAM NECK TO SHIPPS CORNER F.M./SHIPPS CORNER B.P.S.
FOR F.M. 171 SEE SHT 5 OF 8/FOR B.P.S. SITE SEE SHT 2 OF 10

VALVE No.	1	2	3	4	5	6	7	8	9	10	11	12	13		
SIZE	6"BP	36"GV	6"BP	42"GV	6"BP	36"GV	16"GV	2"A.V.	12"GV	36"GV	36"GV	36"GV	36"GV		
OPENS	LEFT	LEFT	LEFT	LEFT	LEFT	LEFT	LEFT	LEFT	LEFT	LEFT	LEFT	LEFT	LEFT		
TURNS	19	223	19	348	19	223	51	----	38	223?	223?	222	222		
NUT SIZE	2"SQ.	2"SQ.	2"SQ.	2"SQ.	2"SQ.	2"SQ.	2"SQ.	----	2"SQ.	2"SQ.	2"SQ.	2"SQ.	2"SQ.		
NUT TO GRD.	5'	5'-6"	5'	5'-6"	5'	5'-6"	4'-6"	----	4'-6"	5'-6"	5'-6"	6"	6"		
COVER SIZE	10"SQ.	10"SQ.	10"SQ.	10"SQ	10"SQ.	10"SQ.	10"SQ.	16"RD.	10"SQ.	10"SQ.	10"SQ.	10"SQ.	10"SQ.		
COVER MARK	H.R.S.D.	H.R.S.D.	H.R.S.D.	HRSD	H.R.S.D.	H.R.S.D.	HRSD	H.R.S.D.	HRSD	H.R.S.D.	H.R.S.D.	HRSD	HRSD		
MAKE	M&H	M&H	M&H	M&H	M&H	M&H	M&H	----	M&H	M&H	M&H	DARL	DARL		
POSITION	HOR.	HOR.	HOR.	HOR.	HOR.	HOR.	HOR.	VERT.	HOR.	HOR.	HOR.	---	---		
GEARED	NO	YES	NO	YES	NO	YES	NO	----	NO	YES	YES	---	---		
GEAR RATIO	----	3?-1	----	3?-1	----	3 ?-1	----	----	----	3 ?-1	3 ?-1	---	---		
INSTALLED	1974	1974	1974	1974	1974	1974	1974	1974	1974	1974	1974	8/90	8/90		
OWNED BY	HRSD	HRSD	HRSD	HRSD	HRSD	HRSD	HRSD	H.R.S.D.	HRSD	HRSD	HRSD	HRSD	HRSD		
REVISED	1/95	11/95	2/96												

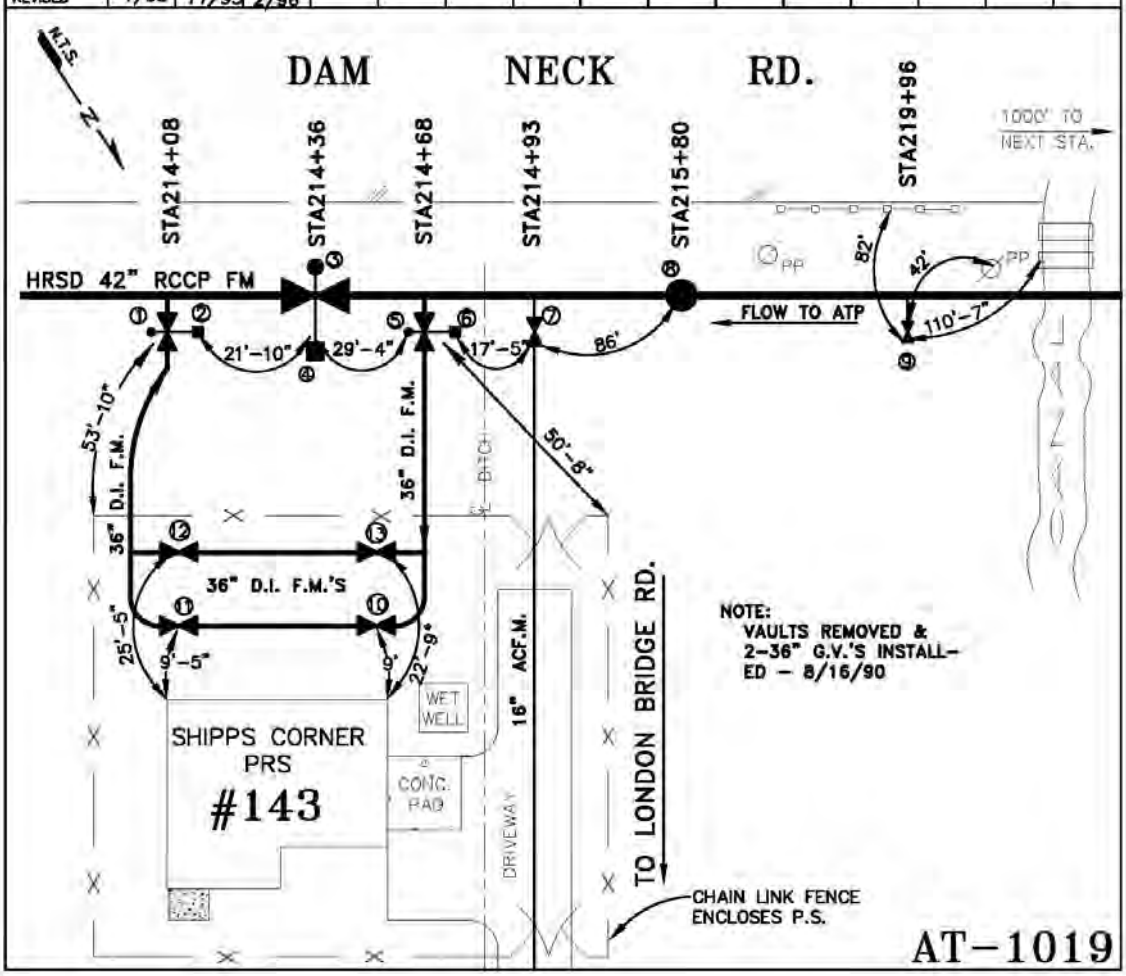

HAMPTON ROADS SANITATION DISTRICT
INTERCEPTOR SYSTEMS DEPARTMENT
VALVE GUIDE

NUMBER NA-3029

LOCATION OLD JOLLIF RD @ PORTSMOUTH BLVD.

DRAWING (27) BOWERS HILL INTER. F.M. SECT. I SHT. NOS. 1 OF 13, & 3(7)

VALVE No.	1	2	3	4	5
SIZE	4"BP	30"	6"BP	36"	2"A.V.
OPENS	LEFT	LEFT	LEFT	LEFT	LEFT
TURNS	29	268	41	227	----
NUT SIZE	2"SQ.	2"SQ.	2"SQ.	2"SQ.	----
NUT TO GRD.	8'	8'	7'	7'	----
COVER SIZE	10"RD	10"SQ	10"RD	10"SQ	16"RD.
COVER MARK	HRSD	HRSD	HRSD	HRSD	H.R.S.D.
MAKE	MULL	MULL	MULL	MULL	----
POSITION	VERT.	HORZ	VERT.	HORZ	VERT.
GEARED	YES	YES	YES	YES	----
GEAR RATIO	UNK.	UNK.	UNK.	UNK.	----
INSTALLED	1978	1978	1978	1978	1990
OWNED BY	HRSD	HRSD	HRSD	HRSD	H.R.S.D.
REVISED	11/94	8/96	9/07		

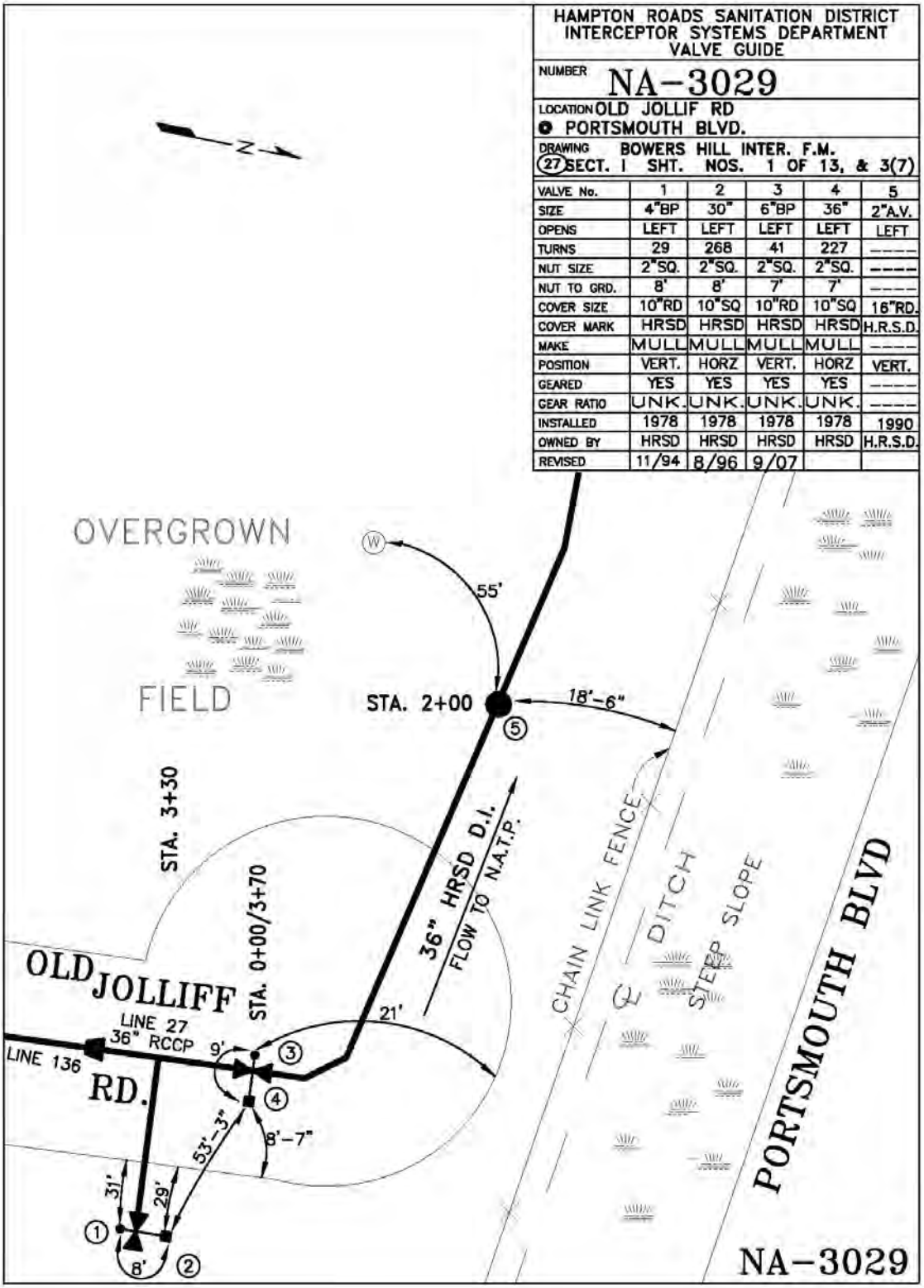

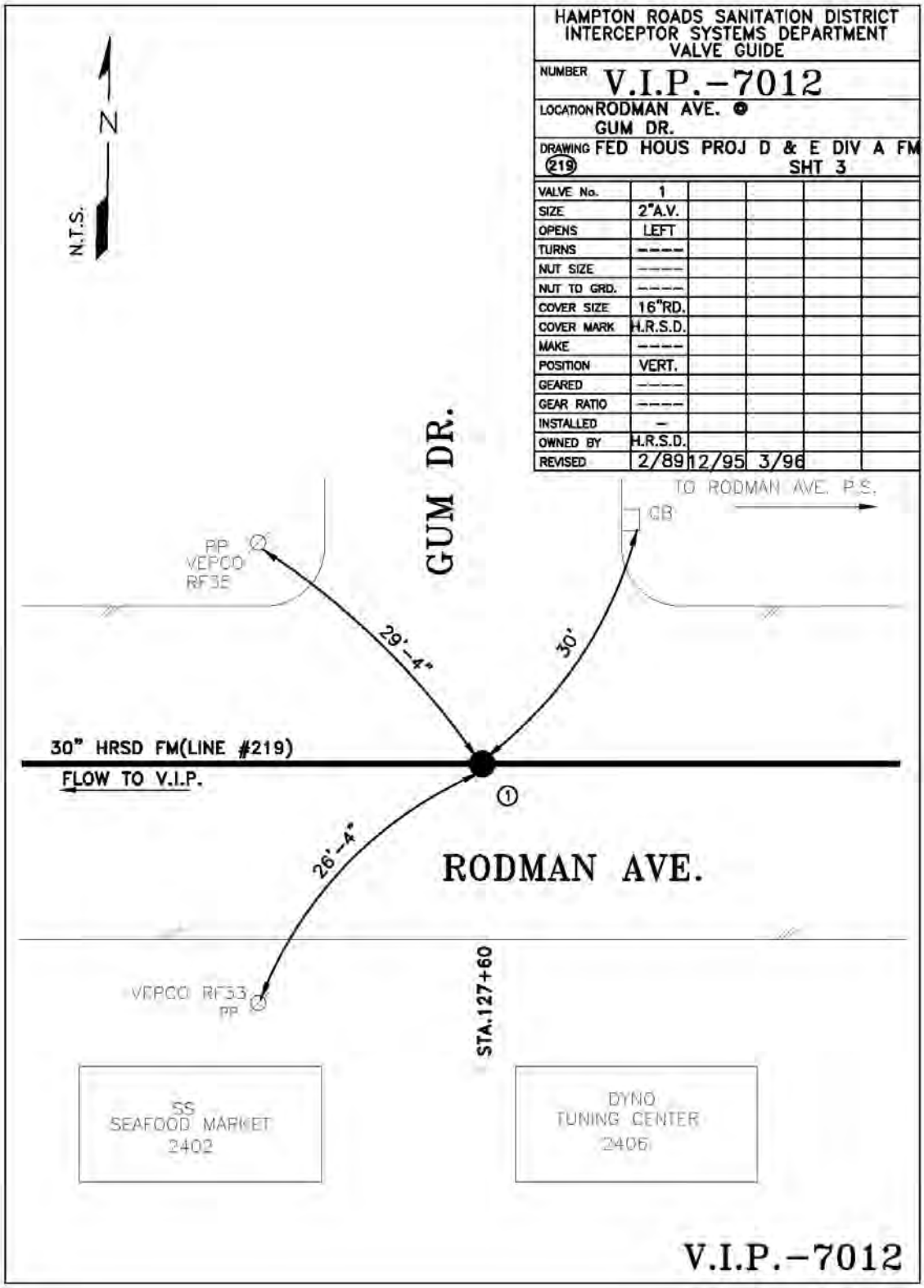

End of Section

Section 7 - HRSD Building Information Model (BIM) Requirements

Contents

1.0 Introduction 2
1.1 Preface 2
1.2 Overview 2
2.0 Level of Development (LOD) Tables 2
2.1 Model and Contract Drawing Content by Project Milestone 4
3.0 BIM Execution Plan 30
4.0 Model File Creation 30
4.1 Project Templates 30
4.2 Orientation and Project Base Point 30
4.3 Revit Model Linking 30
4.4 Level and Grids 30
4.5 Model Naming Convention 31
5.0 Shared Coordinates 33
5.1 State Plan Coordinate System 33
5.2 Federated Site Model 33
6.0 Family Creation 33
6.1 Family Naming Convention 34
6.2 Family Level of Detail 34
7.0 Shared Parameter File 35
7.1 Shared Parameters in Models 35
7.2 Shared Parameters, Equipment Data and Asset ID 35
8.0 Contract Drawings 36
8.1 Sheet Size 36
8.2 Sheet Numbering 36
8.3 View Templates and Filters 37
8.4 Text and Labels 37
8.5 Schedules 38
8.6 Plans, Sections and Details 38
8.7 Drawing Submittal Format 38

1.0 Introduction

1.1 Preface

This document presents HRSD's BIM Requirements with a focus on Revit. These requirements and associated Revit template set a minimum standard to establish consistency throughout projects. This document provides guidance on setting up and executing a project using Revit.

These requirements shall be used in conjunction with each project specific BIM Execution Plan. The BIM Execution Plan includes project specific planning including team members and roles, software, and releases to be used, file hosting location, model sharing methods, deliverable dates, client presentation methods, project specific LOD requirements, etc. and shall be set up by the project BIM lead in close coordination with the HRSD project manager and consultant project manager.

1.2 Overview

This manual will serve as an HRSD style guide for the use of Revit BIM software and defines the practice common to all drawings produced for HRSD projects. This manual is intended to be used alongside HRSD, project template and shared parameter file.

2.0 Level of Development (LOD) Tables

The following LOD (Level of Development) tables are based on the AIA Level of Development definitions. These tables shall be used in conjunction with the project BIM Execution Plan to coordinate BIM model development with individual project goals and milestones. These tables provide general LOD outlines and may not fully represent individual project requirements or specific mentions of required components. The designer shall use his/her best judgment, based on these tables and coordination with the project team, to meet project goals and/or milestones outlined in the Project BIM Execution Plan. All components in a specific discipline model shall be represented at similar LOD, and special care must be taken when importing models from third parties (vendor websites). These models are often detailed to a much higher level than content created by the modeling standards established in this document. Refer to Family Creation Requirements - Paragraph 6.0 for more information.

The LOD definitions below are written to dictate the production of individual model elements (mechanical equipment, walls, framing, etc.) represented within discipline project model files. These definitions contribute the project file as a whole but are not an indication of project milestones. Refer to Paragraph 2.1 for information about level of development of project model files at various project milestones.

Basic LOD Definitions	
LOD 100	LOD 100 elements are schematic representations (linework and/or basic masses) of large equipment and structure elements. LOD 100 elements represent the approximate maximum size, quantity, orientation, and relative location to other elements but not necessarily it's actual shape. LOD 100 elements are generally used to develop preliminary layouts. Any information gathered from LOD 100 model elements must be considered approximate.
LOD 200	Model element satisfies LOD 100 requirements. Model element is recognizable as the component it represents. Models may be represented as volumes or space reservations for component appurtenances: piping, conduit, cable tray, fastening or support devices, etc. Non-graphical information (data parameters) may be attached to model element. LOD 200 models are generally used to further refine layouts. Any information gathered from LOD 200 model elements must be considered approximate.
LOD 300	Model element satisfies LOD 200 and lower requirements. Model element represents accurate size, location, orientation, and count of specified/proposed equipment. This information can be obtained directly from the element without the need to refer to non-model elements such as annotations, dimensions, or notes. <u>LOD 300 model requirements as it pertains to the creation of HRSD contract drawings:</u> • The model element should be easily identifiable from any view when placed on a contract drawing at a scale of 1/4"=1'-0" and printed half size (11"x17"). • No part of the model should print as an unidentifiable black mass. • No part of the real-world object, represented by the model, that does not contribute to the easy identification of the model should be represented, i.e., nuts, bolts, heat sinks, dials, etc. • Model contains IFC data parameters established in HRSD template when applicable. • Model includes non-graphical information required for the population of tags, tables, and other annotation elements.
LOD 350	Model element satisfies LOD 300 and lower requirements. Model element contains elements necessary for connections and coordination with other attached or nearby model elements. <u>LOD 350 model requirements as it pertains to the creation of HRSD contract drawings:</u> • All LOD 300 requirements and elements necessary for connection to other objects. Pipe, duct, electrical connectors, etc.

LOD 400	Model element satisfies LOD 350 and lower requirements. Model element contains detailed components sufficient for fabrication and assembly. <u>LOD 400 model requirements as it pertains to the creation of HRSD contract drawings:</u> • These models would be used for the fabrication of equipment and building components and would contain more information than necessary to produce contract drawings. • Models developed to this LOD are beyond the scope of HRSD project work.
LOD 500	Model satisfies LOD 400 requirements. Model incorporates field verified measurements. <u>LOD 500 model requirements as it pertains to the creation of HRSD contract drawings:</u> • Models developed to this LOD are beyond the scope of HRSD project work.

2.1 Model and Contract Drawing Content by Project Milestone

The following tables outline the content required for various project milestones. These milestones offer basic guidelines and may not address the requirements of all projects. It is the responsibility of the design team and the HRSD project manager to determine the development of project models and contract drawings to suit the needs of individual projects. Project specific LOD requirements shall be defined in the project BIM Execution Plan.

Process Mechanical

Project Milestone	Project Milestone Requirements

PER Draft	The preliminary model should reflect the basic intent of design but may lack detail sufficient for anyone unfamiliar with the project to understand the design intent without written or verbal description.
	
	Model includes:
	
	• Schematic representation of existing conditions if applicable
	  o If an existing model is available, it should be used as a background/starting point.
	• Schematic layout of major process mechanical equipment represented at LOD 100 or 200
	  o Major equipment includes but is not limited to: large containment vessels (tanks, bins, etc.), pumps, centrifuges, screens, etc.
	• Layout dimensions and equipment orientations are approximate and may change upon further model development

Process Mechanical

Project Milestone	Project Milestone Requirements

PER Final	The PER model and drawings should represent the basic design intent of the facility to a sufficient level that someone unfamiliar with it could understand its basic function and processes. All process equipment represented at PER and beyond shall be modeled to LOD 350.
	
	Model includes:
	
	• Existing conditions if applicable
	  o Existing conditions shall be modeled to the same level as proposed items at every project milestone.
	  o Additional equipment may need to be modeled to represent interactions with proposed process mechanical items.
	  o If existing process mechanical model exists, there is no need to remove or hide content for the sake of consistency.
	• Preliminary process mechanical equipment:
	  o Layout of process mechanical equipment shall accurately represent size, quantity, shape, and location.
	  o Process mechanical equipment models (families) represent possible selection of proposed/specified equipment but may not represent equipment that will ultimately be installed
	  ▪ When multiple manufactures are specified for any given equipment, the largest and/or most challenging to install of the possible selections should be represented.
	  o Appropriate maintenance and access/code clearance requirements represented as well as considerations for placement of items relating to other disciplines which may not be present at this stage
	  o Space allocations for small diameter piping and content related to other disciplines not shown: HVAC ductwork, control panels, structural framing, etc.
	• Preliminary process mechanical piping, fittings, and accessories:
	  o Process flow conveying piping3” diameter and greater, valves, fittings and pipe accessories sized per process engineer’s calculations
	  o Layout of process mechanical piping equipment shall accurately represent size, quantity, shape, and location
	  o Accurate dimensional, piping system, pipe size and pipe elevation data can be pulled from the model for production of contract drawings
	
	Contract drawings include:
	
	• Plans and sections:
	  o Plans (overall and enlarged when required)
	  o Overall sections
	  o Refer to Paragraph 8.6 for general information about plans and sections

Process Mechanical

Project Milestone	Project Milestone Requirements
	• Basic annotation: Tags representing information pulled directly from model elements should be used whenever possible. o Size, system abbreviation and centerline elevation (CL) for all process flow conveying piping o Descriptive tags of valves and pipe accessories, i.e., “8” BUTTERFLY VALVE” o Descriptive text relating to process mechanical equipment, i.e., “POLYMER TRANSFER PUMP” o Overall dimensions of rooms and/or tank and channel dimensions o Elevations of all major floors
50%	The 50% model and contract drawings should represent further development of design, from the PER, and incorporate any design comments from HRSD’s PER design review. A shared coordinate system must be established and common amongst all models no later than the 50% submittal. A shared coordinate system can be created earlier per the directions specified in the Project BIM Execution Plan. Model includes: • Further development of process mechanical piping: o Ancillary piping and associated valves and fittings not conveying process flow o Ancillary pipe accessories represented (Dismantling joints, expansion couplings, flushing connections, sample ports, etc.) o Small diameter piping 1” - 3” diameter and all associated fittings and valves o Final pipe size diameter representation requirements will vary by project. Consult with HRSD Project Manager for specific project requirements • Instrumentation associated with all represented equipment: o This would mostly apply to instrumentation items that require power, i.e., temperature elements and transmitters, flow elements and transmitters, level sensors and transmitters, etc. o Instrument designation and description can be pulled from model elements • Additional process mechanical equipment not represented in PER documents • Further refinement of process mechanical equipment and piping layout representing further design • Chemical storage and distribution systems including but not limited to bulk chemical storage tanks, day tanks, metering pumps, skid mounted make-up units, major supply and distribution piping, and associated valves • Inter-discipline coordination and conflict resolution (clash detection)

Process Mechanical

Project Milestone	Project Milestone Requirements
	Contract drawings Include: • Updates to any annotation present in PER documents reflecting model changes o Much of this should be automated if tags are used in lieu of simple text. • Additional section and plan views, if additional plan views are necessary, generally at a larger scale than those present in PER drawings further detailing design • Dimensions of major pipe penetrations, pipe headers and equipment • Standard details and standard detail callouts • Additional callouts of any additional equipment, piping, or pipe accessories • Instrumentation tags for all process mechanical equipment (pumps, motor operated valves, sensors, etc.) that require power • Descriptive tags relating to instrumentation elements
90%	The 90% model and contract drawings should represent further development of design and incorporate any design comments from HRSD's 50% design review. Model includes: • Equipment control panels and local control stations located and coordinated with Electrical and Instrumentation • Seal water assemblies located if applicable • Pipe supports, to the extent specified by the project BIM Execution Plan, but in particular, supports for pipe systems that experience substantial force due to expansion and contraction during operation • Further refinement of process mechanical equipment and piping layout as well as any related equipment representing further design. • Further refinement of chemical storage and distribution systems, associated piping and valves • Inter-discipline coordination and conflict resolution (clash detection) Contract drawings Include: • Updates to any annotation present in 50% documents reflecting model changes o Much of this should be automated if tags are used in lieu of simple text • Details of unique process mechanical equipment, equipment configurations or equipment connections • Detailed notes dictating the specifics of construction that may not be clearly represented graphically

Process Mechanical

Project Milestone	Project Milestone Requirements

100% - Issued for Construction	The 100% model and contract drawings should represent further development of design and incorporate any design comments from HRSD's 90% design review.
	
	Model includes:
	
	• Final routing of all process piping 1" diameter and greater with all necessary pipe accessories, fittings, and valves
	  o Final pipe size diameter representation requirements will vary by project. Consult with HRSD Project Manager for specific project requirements
	• Final placement of process mechanical equipment developed to LOD 350
	• All process mechanical equipment models (families) include all operations and maintenance data parameters (IFC parameters) as required by HRSD
	  o All equipment operations and maintenance data parameters are preloaded into the HRSD process mechanical Revit template and will automatically be applied into any appropriate families loaded into projects created from this template, provided they are categorized correctly.
	  o All equipment operations and maintenance data parameters can also be found in the HRSD shared parameter file (HRSD-Shared Parameter File.txt).
	• Accurate representations of proposed process mechanical equipment, piping, valves, and pipe accessories developed to LOD 350
	• Appropriate maintenance and access/code clearance requirements accounted for with specific care to ensure no encroachment of these areas by any discipline
	• Inter-discipline coordination and conflict resolution (clash detection) completed with all conflicts resolved
	
	Contract drawings include:
	
	• Dimensions and annotation sufficient for the construction of all process mechanical equipment and piping

Process Mechanical

Project Milestone	Project Milestone Requirements

Substantial Completion	Model includes:
	• All discipline elements modeled to as-built size, type and location
	  o All elements shall be model to correct dimensions and positional accuracy to the nearest ½" relative to major structural components (walls, column lines, etc.).
	  o It is not acceptable to modify dimensions to represent the accurate location of model elements. These elements must be relocated/remodeled to represent the as-built condition.
	• Model reflects specific equipment installed which may differ from the proposed model and drawings
	• Model reflects all changes made to proposed process mechanical design during construction
	• All Process Mechanical equipment models include all operations and maintenance data parameters (IFC parameters) as required by HRSD.
	  o All operations and maintenance data parameters are populated with correct data as provided by contractor
	
	Contract drawings include:
	• Dimensions and annotation sufficient for the construction of all process mechanical equipment and piping
	• Dimensions and annotation modified to reflect as-built conditions

Structural Model

Project Milestone	Project Milestone Requirements

PER Draft	The preliminary model should reflect the basic intent of design but may lack detail sufficient for anyone unfamiliar with the project to understand the design intent without written or verbal description.
	
	Model includes:
	
	• Schematic representation of existing conditions if applicable
	  o If an existing model is available, it should be used as a background/starting point.
	• Schematic layout of major structural elements represented at LOD 100 or 200
	  o Major structural elements include but are not limited to: wall, floor slabs, columns and column grids, etc.
	
	Layout dimensions, element sizes and orientations are approximate and may change upon further model development.

PER Final	Structural drawings may not be required at this project milestone. Coordinate HRSD project manager about the production of drawings and modeling effort for PER Final Submittal.
	
	The PER model and drawings should represent the basic design intent of the facility to a sufficient level that someone unfamiliar with it could understand the basic structural layout. All structural elements represented for the PER and beyond shall be modeled to LOD 300.
	
	Model includes:
	
	• Existing conditions if applicable
	  o Existing conditions shall be modeled to the same level as proposed items at every project milestone.
	  o If existing structural model exists, there is no need to remove or hide content for the sake of consistency.
	• Major load bearing walls and floors sized based standard practice
	• Major structural framing based on standard practice
	  o Any column grids associated with preliminary columns
	• Conceptual layout of access stairs and platforms with any framing that may impact accessibility to equipment or equipment areas
	  o Framing that does not meet that criteria does not need to be modeled.
	  o Input from structural engineer may be required
	• Equipment pads under all present equipment as required
	• Openings for any required equipment access
	• Grated openings and access hatches/doors

Structural Model

Project Milestone	Project Milestone Requirements

	Drawings include:
	
	Consult HRSD project manager regarding the inclusion of structural drawings for the Final PER.
	
	• Plans and sections:
	  o Plans (overall and enlarged when required)
	  o Overall sections
	  o Refer to Paragraph 8.6 for general information about plans and sections.
	• Overall, out-to-out dimensions
	• Interior-to-interior dimensions of spaces
	  o Thicknesses of walls and floors is not required at this stage
	• Dimensions between column grids and from grids to walls where applicable
	• Elevations of all major floors shown in sections with spot elevations shown in plan only when elevations cannot be called out in sections

50%	The 50% model and contract drawings should represent further development of design, from the PER, and incorporate any design comments from HRSD's PER design review.
	
	A shared coordinate system must be established and common amongst all models no later than the 50% submittal. A shared coordinate system can be created earlier per the directions specified in the Project BIM Execution Plan.
	
	Model includes:
	
	• Major load bearing walls and floors updated to reflect structural engineer's calculations
	• Minor framing sized per design engineer's calculations
	  o Platform framing and other minor supports
	• Foundation elements:
	  o Spread footings, slab turn downs, trench and sump builddowns, etc.
	• Roof support systems:
	  o Precast panels, metal decking, metal decking with concrete, trusses, bar joists, embedded grating seats, etc.
	• Expansion joints in concrete where required
	• Inter-discipline coordination and conflict resolution (clash detection)
	
	Contract drawings include:
	
	• All requirements defined in the PER Final milestone and those defined in this section
	• Updates to any annotation present in the PER documents reflecting model changes, if applicable
	• Additional dimensions indicating thicknesses of structural elements

Structural Model

Project Milestone	Project Milestone Requirements

	• Plans and sections:
	  o Plans (overall and enlarged when required)
	  o Overall sections
	  o Partial sections detailing elements not clearly detailed in overall sections
	  o Refer to Paragraph 8.6 for general information about plans and sections.
	• Standard details and standard detail callouts
	• General structural notes

90%	The 90% model and contract drawings should represent further development of design and incorporate any design comments from HRSD's 50% design review. Model includes: • All structural walls, floors slabs, framing, bracing and other support members required for the construction the facility present and modeled to LOD 300 • Inter-discipline coordination and conflict resolution (clash detection) Contract drawings include: • Updates to any annotation present in 50% documents reflecting model changes. o All structural elements dimensioned or otherwise located • Structural framing elevations if applicable • Rebar sizes and spacing represented on drawings • Framing connection details • Detailed notes dictating the specifics of construction that may not be clearly represented graphically
100% Construction	The 100% model and contract drawings should represent further development of design and incorporate any design comments from HRSD's 90% design review. Model includes: • All structural walls, floors slabs, framing, bracing and other support members required for the construction the facility present, sized per the structural engineer's final calculations, and modeled to LOD 300 • Inter-discipline coordination and conflict resolution (clash detection) completed with all conflicts resolved Contract drawings include: • Dimensions and annotation sufficient for the construction of all structural elements reflecting the design intent of the structural engineer

Structural Model

Project Milestone	Project Milestone Requirements

Substantial Completion	Model includes:
	• All discipline elements modeled to as-built size, type, and location.
	  o All elements shall be model to correct dimensions and positional accuracy to the nearest ½" relative to other structural elements.
	  o It is not acceptable to modify dimensions to represent the accurate location of model elements. These elements must be relocated/remodeled to represent the as-built condition.
	• Any changes made to the proposed structural design during construction
	
	Contract drawings include:
	• Dimensions and annotation sufficient for the construction of all structural elements reflecting the as-built condition of the structure
	  o Dimensions and annotation modified to reflect as-built conditions

Architectural Model

Project Milestone	Project Milestone Requirements

PER Draft	The preliminary model should reflect the basic intent of design but may lack detail sufficient for anyone unfamiliar with the project to understand the design intent without written or verbal description.
	
	Model includes:
	
	• Schematic representation of existing conditions if applicable
	  o If an existing model is available, it should be used as a background/starting point.
	• Schematic layout of major architectural elements represented at LOD 100 or 200
	  o Major architectural elements include but are not limited to: masonry walls (interior and exterior), roofs, doors, etc.
	
	Layout dimensions, element sizes and orientations are approximate and may change upon further model development.

PER Final	Architectural drawings may not be required at this project milestone. Coordinate HRSD project manager about the production of drawings and modeling effort for PER Final Submittal.
	
	The PER model and drawings should represent the basic design intent of the facility to a sufficient level that someone unfamiliar with it could understand the basic architectural layout. All architectural elements represented for the PER and beyond shall be modeled to LOD 300.
	
	Model includes:
	
	• Existing conditions if applicable
	  o Existing conditions shall be modeled to the same level as proposed items at every project milestone.
	  o If existing architectural model exists and is developed beyond current milestone, there is no need to remove or hide content for the sake of consistency.
	• Major walls sized based on standard practice
	  o Wall construction materials can be assumed to be standard masonry or actual material where known at this milestone
	• Preliminary architectural items
	  o Basic doors representing proposed size and type
	  o Basic roofs representing shape and type
	• Rooms with associated room names
	• Egress and code requirements

Architectural Model

Project Milestone	Project Milestone Requirements

	Drawings include:
	
	Consult HRSD project manager regarding the inclusion of architectural drawings for the Final PER.
	
	• Plans, Elevations, and Sections:
	  o Plans (overall and enlarged when required)
	  o Overall Elevations
	  o Overall Building Sections
	  o Refer to Paragraph 8.6 for general information about plans, elevations and sections.
	• Overall, out-to-out dimensions
	• Interior-to-interior dimensions of spaces
	  o Thicknesses of walls and floors is not required at this stage
	• Room names
	• Simple descriptions of visible architectural items

50%	The 50% model and contract drawings should represent further development of design, from the PER, and incorporate any design comments from HRSD's PER design review.
	
	A shared coordinate system must be established and common amongst all models no later than the 50% submittal. A shared coordinate system can be created earlier per the directions specified in the Project BIM Execution Plan.
	
	Model includes:
	
	• Walls
	  o Size and composition updated to reflect architect's input
	• Doors
	  o Type and size updated to reflect architect's input
	• Ceiling Systems
	• Casework and built-in items
	• Finish and Opening Schedules
	• Life safety data including maximum travel distances, adequate exits, fire rated walls, and appropriate fire warning systems per local building code
	• Door properties entered as BIM data
	• Window and louver properties entered as BIM data
	
	Contract drawings include:
	
	• Updates to any annotation present in PER documents reflecting model changes, if applicable
	• Plans and sections:
	  o Plans (overall and enlarged when required)

Architectural Model

Project Milestone	Project Milestone Requirements
	o Overall sections o Partial sections detailing elements not clearly detailed in overall sections o Refer to Paragraph 8.6 for general information about plans and sections. • Casework and built-in items identified and detailed on drawings • Standard details and standard detail callouts • Room and opening schedules to define all finishes and materials
90%	The 90% model and contract drawings should represent further development of design and incorporate any design comments from HRSD's 50% design review. Model includes: • All exterior and interior wall materials updated to reflect architect's design intent • Ceiling systems updated • Roof drainage system • Toilet accessories • Furniture • ADA compliant building components • Room finish data updated • Inter-discipline coordination and conflict resolution (clash detection) Contract drawings include: • Updates to any annotation present in 50% documents reflecting model changes • Schedules for architectural components populated by BIM data • Wall sections • Ceiling system identified and detailed • Roof, wall, and other architectural details • Interior elevations • Detailed notes dictating the specifics of construction that may not be clearly represented graphically
100% Construction	The 100% model and contract drawings should represent further development of design and incorporate any design comments from HRSD's 90% design review. Model includes: • All walls, ceilings, and roofs modeled to LOD 300 • All doors, windows, casework, and additional architectural items modeled to LOD 350 • Inter-discipline coordination and conflict resolution (clash detection) completed with all conflicts resolved

Architectural Model

Project Milestone	Project Milestone Requirements
	Contract drawings include: • Dimensions and annotation sufficient for the construction of all architectural elements reflecting the design intent of the structural engineer

Substantial Completion	Model includes:
	
	• All discipline elements shall be modeled to as-built size, type, and location.
	  o All elements shall be model to correct dimensions and positional accuracy to the nearest ½".
	  o It is not acceptable to modify dimensions to represent the accurate location of model elements. These elements must be relocated/remodeled to represent the as-built condition.
	• Any changes made to the proposed architectural design during construction
	
	Contract drawings include:
	
	• Dimensions and annotation sufficient for the construction of all architectural elements reflecting the design intent of the structural engineer
	• Dimensions and annotation modified to reflect as-built conditions

HVAC Model

Project Milestone	Project Milestone Requirements

PER Draft	The preliminary model should reflect the basic intent of design but may lack detail sufficient for anyone unfamiliar with the project to understand the design intent without written or verbal description.
	
	Model includes:
	
	• Schematic representation of existing conditions if applicable.
	  o If an existing model is available, it should be used as a background/starting point.
	• Schematic layout of major HVAC equipment represented at LOD 100 or 200
	  o Major equipment includes but is not limited to: condensing units, VAV boxes, air handling units, etc.
	
	Layout dimensions and equipment orientations are approximate and may change upon further model development.

PER Final	HVAC drawings may not be required at this project milestone. Coordinate HRSD project manager about the production of drawings and modeling effort for the PER Final submittal.
	
	The PER model and drawings should represent the basic design intent of the facility to a sufficient level that someone unfamiliar with it could understand its basic function and process. All HVAC equipment represented for the PER and beyond shall be modeled to LOD 350.
	
	Model includes:
	
	• Existing conditions if applicable
	  o Existing conditions shall be modeled to the same level as proposed items at every project milestone.
	  o Additional equipment may need to be modeled to represent interactions with proposed HVAC items.
	• If existing HVAC model exists, there is no need to remove or hide content for the sake of consistency.
	• Preliminary HVAC equipment:
	  o Large HVAC equipment:
	  ▪ Air Handling units, Condensers, VAV Boxes, etc.
	  ▪ Pumps
	  o Layout of HVAC equipment shall accurately represent size, quantity, shape, and location.
	  o HVAC equipment models (families) represent possible selection of proposed/specified equipment but may not represent equipment that will ultimately be installed.

HVAC Model

Project Milestone	Project Milestone Requirements
	▪ When multiple manufactures are specified for any given equipment, the largest and/or most challenging to install of the possible selections should be represented. o Appropriate maintenance and access/code clearance requirements represented as well as considerations for placement of items relating to other disciplines which may not be present at this stage o Space allocations for small diameter piping and content related to other disciplines not shown: process mechanical piping, control panels, structural framing, etc. • Areas reserved for the future locations/routing of ductwork and HVAC equipment not shown in the HVAC model Drawings include: Consult HRSD project manager regarding the inclusion of HVAC drawings for the Final PER. • Plans and sections: o Plans (overall and enlarged when required) o Overall sections o Refer to Paragraph 8.6 for general information about plans and sections. • Basic annotation: Tags representing information pulled directly from model elements should be used whenever possible. o Basic descriptions of all HVAC equipment present in the model • Dimensions locating HVAC equipment relative to major structural or architectural walls
50%	The 50% model and contract drawings should represent further development of design, from the PER, and incorporate any design comments from HRSD's PER design review. A shared coordinate system must be established and common amongst all models no later than the 50% submittal. A shared coordinate system can be created earlier per the directions specified in the Project BIM Execution Plan. Model includes: • Ductwork for supply and exhaust/return air • HVAC related piping 1" diameter and greater • Additional HVAC equipment: o Fans, unit heaters • Inter-discipline coordination and conflict resolution (clash detection)

HVAC Model

Project Milestone	Project Milestone Requirements

	Contract drawings Include:
	
	• Plans and sections:
	  o Plans (overall and enlarged when required)
	  o Overall sections
	  o Partial sections detailing elements not clearly detailed in overall sections
	  o Refer to Paragraph 8.6 for general information about plans and sections.
	• Updates to any annotation present in PER documents reflecting model changes, if applicable
	• Descriptive tags of HVAC equipment and control equipment
	• Descriptive tags of HVAC ductwork including size and elevation
	• Size, system abbreviation and centerline elevation (CL) for all major piping
	• Standard details and standard detail callouts

90%	The 90% model and contract drawings should represent further development of design and incorporate any design comments from HRSD's 50% design review. Model includes: • Equipment control panels located and coordinated with Electrical and Instrumentation • Duct and Pipe supports, to the extent specified by the project BIM Execution Plan, but, supports for pipe systems that experience substantial expansion and contraction during normal process, including Chilled and Hot Water • Inter-discipline coordination and conflict resolution (clash detection) Contract drawings Include: • Updates to any annotation present in 50% documents reflecting model changes o Much of this should be automated if tags are used in lieu of simple text. • Details of unique HVAC equipment, equipment configurations or equipment connections • Detailed notes dictating the specifics of construction that may not be clearly represented graphically
100% Construction	The 100% model and contract drawings should represent further development of design and incorporate any design comments from HRSD's 90% design review. Model includes: • Final routing of all ductworks with all necessary fittings, control and distribution devices • Final placement of HVAC equipment modeled to LOD 350

HVAC Model

Project Milestone	Project Milestone Requirements

	• All HVAC equipment models (families) include all operations and maintenance data parameters (IFC parameters) as required by HRSD
	  o All equipment operations and maintenance data parameters are preloaded into the HRSD HVAC Revit template and will automatically be applied into any appropriate families loaded into projects created from this template, provided they are categorized correctly.
	  o All equipment operations and maintenance data parameters can also be found in the HRSD shared parameter file (HRSD-Shared Parameter File.txt).
	• Appropriate maintenance and access/code clearance requirements accounted for with specific care to ensure no encroachment of these areas by any discipline
	• Inter-discipline coordination and conflict resolution (clash detection) completed with all conflicts resolved
	Contract drawings include:
	• Dimensions and annotation sufficient for the construction of all HVAC equipment, ductwork, and piping

Substantial Completion	Model includes:
	• All discipline elements modeled to as-built size, type, and location.
	  o All elements shall be model to correct dimensions and positional accuracy to the nearest ½" relative to major structural components (walls, column lines, etc.).
	  o It is not acceptable to modify dimensions to represent the accurate location of model elements. These elements must be relocated/remodeled to represent the as-built condition.
	• Model reflects specific equipment installed which may differ from the proposed model and drawings
	• Model reflects all changes made to proposed HVAC design during construction
	• All HVAC equipment models (families) include all operations and maintenance data parameters (IFC parameters) as required by HRSD.
	  o All operations and maintenance data parameters are populated with correct data as provided by contractor
	Contract drawings include:
	• Dimensions and annotation sufficient for the construction of HVAC equipment, ductwork, and piping
	  o Dimensions and annotation modified to reflect as-built conditions

Plumbing Model

Project Milestone	Project Milestone Requirements

PER Draft	The preliminary model should reflect the basic intent of design but may lack detail sufficient for anyone unfamiliar with the project to understand the design intent without written or verbal description.
	
	Model includes:
	
	• Schematic representation of existing conditions if applicable.
	  o If an existing model is available, it should be used as a background/starting point.
	• Schematic layout of major plumbing equipment represented at LOD 100 or 200
	  o Major equipment includes but is not limited to: water heaters, sinks toilets, safety showers, etc.
	• Layout dimensions and equipment orientations are approximate and may change upon further model development

PER Final	Plumbing drawings may not be required at this project milestone. Coordinate with HRSD project manager about the production of drawings and modeling effort at PER Final.
	
	The PER model and contract drawings should represent the basic design intent of the facility to a sufficient level that someone unfamiliar with it could understand its basic function and process. All plumbing fixtures and equipment represented for the PER and beyond shall be modeled to LOD 350.
	
	Model includes:
	
	• Existing conditions if applicable
	  o Existing conditions shall be modeled to the same level as proposed items at every project milestone.
	  o Additional equipment may need to be modeled to represent interactions with proposed plumbing items.
	  o If existing plumbing model exists, there is no need to remove or hide content for the sake of consistency.
	• Preliminary plumbing fixtures and equipment:
	  o Large plumbing fixtures and equipment:
	  ▪ Sinks, toilets, safety showers, water heaters, etc.
	  o Layout of plumbing equipment shall accurately represent size, quantity, shape, and location
	  o Appropriate maintenance and access/code clearance requirements represented as well as considerations for placement of items relating to other disciplines which may not be present at this stage

Plumbing Model

Project Milestone	Project Milestone Requirements
	o Space allocations for small diameter piping and content related to other disciplines not shown: HVAC ductwork, control panels, structural framing, etc. Drawings include: Consult HRSD project manager regarding the inclusion of plumbing drawings for the Final PER. • Plans and sections: o Plans (overall and enlarged when required) o Overall sections o Refer to Paragraph 8.6 for general information about plans and sections. • Basic annotation: Tags representing information pulled directly from model elements should be used whenever possible. o Descriptive tags of plumbing fixtures and equipment
50%	The 50% model and contract drawings should represent further development of design, from the PER, and incorporate any design comments from HRSD's PER design review. A shared coordinate system must be established and common amongst all models no later than the 50% submittal. A shared coordinate system can be created earlier per the directions specified in the Project BIM Execution Plan. Model includes: • Further development of plumbing fixtures, equipment, and piping: o Piping 1/2" and greater diameter and all associated fittings and valves o Final pipe size diameter representation requirements will vary by project. Consult with HRSD project manager for specific project requirements • Additional plumbing fixtures not represented in PER drawings • Inter-discipline coordination and conflict resolution (clash detection) Drawings Include: • Plans and sections: o Plans (overall and enlarged when required) o Overall sections o Partial sections detailing elements not clearly detailed in overall sections o Refer to Paragraph 8.6 for general information about plans and sections.

Plumbing Model

Project Milestone	Project Milestone Requirements
	• Updates to any annotation present in PER documents reflecting model changes, if applicable o Much of this should be automated if tags are used in lieu of simple text. • Dimensions of major pipe penetrations and locations of fixtures • Standard details and standard detail callouts • Additional callouts of any additional fixtures and equipment, piping, or pipe accessories • Instrumentation tags for all plumbing equipment that require power
90%	The 90% model and contract drawings should represent further development of design and incorporate any design comments from HRSD's 50% design review. Model includes: • Further refinement of plumbing fixtures, equipment, and piping layout as well as any related equipment representing further design • Inter-discipline coordination and conflict resolution (clash detection) Contract drawings Include: • Updates to any annotation present in 50% documents reflecting model changes o Much of this should be automated if tags are used in lieu of simple text. • Details of unique plumbing fixtures and equipment configurations or equipment connections. • Piping system riser diagrams • Detailed notes dictating the specifics of construction that may not be clearly represented graphically

100% - Issued for Construction	The 100% model and contract drawings should represent further development of design and incorporate any design comments from HRSD's 90% design review.
	
	Model includes:
	
	• Final locations of plumbing fixtures and equipment
	• All process plumbing equipment models (families) include all operations and maintenance data parameters (IFC parameters) as required by HRSD.
	  o All equipment operations and maintenance data parameters are preloaded into the HRSD plumbing Revit template and will automatically be applied into any appropriate families loaded into projects created from this template, provided they are categorized correctly.
	  o All equipment operations and maintenance data parameters can also be found in the HRSD shared parameter file (HRSD-Shared Parameter File.txt).

Plumbing Model

Project Milestone	Project Milestone Requirements
	• Final routing of plumbing piping Contract drawings include: • Dimensions and annotation sufficient for the construction of all plumbing fixtures, equipment, and piping

Substantial Completion	Model includes:
	
	• All discipline elements modeled to as-built size, type and location.
	  o All elements shall be model to correct dimensions and positional accuracy to the nearest ½" relative to major structural components (walls, column lines, etc.).
	  o It is not acceptable to modify dimensions to represent the accurate location of model elements. These elements must be relocated/remodeled to represent the as-built condition.
	• Model reflects specific equipment installed which may differ from the proposed model and drawings
	• Model reflects all changes made to proposed plumbing design during construction
	• All plumbing equipment models (families) include all operations and maintenance data parameters (IFC parameters) as required by HRSD.
	  o All operations and maintenance data parameters are populated with correct data as provided by contractor
	
	Contract drawings include:
	
	• Dimensions and annotation sufficient for the construction of all plumbing fixtures, equipment, and piping.
	  o Dimensions and annotation modified to reflect as-built conditions

Electrical Model

Project Milestone	Project Milestone Requirements

PER Draft	The preliminary model should reflect the basic intent of design but may lack detail sufficient for anyone unfamiliar with the project to understand the design intent without written or verbal description.
	
	Model includes:
	
	• Schematic representation of existing conditions if applicable.
	  o If an existing model is available, it should be used as a background/starting point.
	• Schematic layout of major electrical equipment represented at LOD 100 or 200
	  o Major equipment includes but is not limited to: generators and service entrance equipment, switchgear, switchboards, motor control centers and/or large motor controllers, etc.
	
	Layout dimensions and equipment orientations are approximate and may change upon further model development.

Final PER	Electrical model and drawings may not be required at this project milestone. Coordinate with HRSD project manager about the production of drawings and modeling effort for the Final PER.
	
	The PER model and drawings should represent the basic design intent of the facility to a sufficient level that someone unfamiliar with it could understand its basic function and process. All electrical fixtures and equipment represented for the PER and beyond shall be modeled to LOD 350.
	
	Model includes:
	
	• Existing conditions if applicable
	  o Existing conditions shall be modeled to the same level as proposed items at every project milestone.
	  o Additional equipment may need to be modeled to represent interactions with proposed electrical items.
	  o If existing plumbing model exists, there is no need to remove or hide content for the sake of consistency.
	• Preliminary electrical equipment:
	  o Layout of electrical equipment shall accurately represent size, quantity, shape, and location.
	  o Electrical equipment models (families) represent possible selection of proposed/specified equipment but may not represent equipment that will ultimately be installed.
	  ▪ When multiple manufactures are specified for any given equipment, the largest and/or most challenging to install of the possible selections should be represented.

Electrical Model

Project Milestone	Project Milestone Requirements

	• Appropriate maintenance and access/code clearance requirements represented as well as considerations for placement of items relating to other disciplines which may not be present at this stage
	• Space considerations for placement of conduit and/or cable tray
	
	Drawings include:
	
	Consult HRSD project manager regarding the inclusion of electrical drawings for the Final PER.
	
	• Plans:
	  o Plans (overall and enlarged when required)
	  o Refer to Paragraph 8.6 for general information about plans
	• Basic annotation:
	  Tags representing information pulled directly from model elements should be used whenever possible.
	  o Descriptive tags of electrical equipment

50%	The 50% model and contract drawings should represent further development of design, from the PER, and incorporate any design comments from HRSD's PER design review.
	
	A shared coordinate system must be established and common amongst all models no later than the 50% submittal. A shared coordinate system can be created earlier per the directions specified in the Project BIM Execution Plan.
	
	Model includes:
	
	• Instrumentation and electrical equipment associated with electrical not included in PER model
	• Additional electrical equipment not in the PER
	• Inter-discipline coordination and conflict resolution (clash detection)
	
	Contract drawings Include:
	
	• Plans and sections:
	  o Plans (overall and enlarged when required)
	  o Overall sections
	  o Partial sections detailing elements not clearly detailed in overall sections
	  o Refer to Paragraph 8.6 for general information about plans and sections.
	• Updates to any annotation present in PER documents reflecting model changes, if applicable

Electrical Model

Project Milestone	Project Milestone Requirements
	o Much of this should be automated if tags are used in lieu of simple text. • Standard details and standard detail callouts • Additional callouts of any additional equipment • Instrumentation tags for all equipment (pumps, motor operated valves, sensors, etc.) that require power
90%	The 90% model and contract drawings should represent further development of design and incorporate any design comments from HRSD's 50% design review. Model includes: • Equipment control panels and local control stations located and coordinated with all other required disciplines • Further refinement of electrical equipment layout as well as any related equipment representing further design • Lighting and other electrical fixtures • Inter-discipline coordination and conflict resolution (clash detection). • Conduit embedded in slabs and walls. Contract drawings Include: • Updates to any annotation present in 50% documents reflecting model changes o Much of this should be automated if tags are used in lieu of simple text. • Details of unique electrical equipment, equipment configurations or equipment connections. • Single line diagrams, panel schedules, riser diagrams, conduit and wire schedules lighting plans and other electrical equipment single lines
100% - Issued for Construction	The 100% model and contract drawings should represent further development of design and incorporate any design comments from HRSD's 90% design review. Model includes: • Accurate representations of proposed electrical equipment developed to LOD 350 • All applicable electrical equipment models (families) include all operations and maintenance data parameters (IFC parameters) as required by HRSD. o All equipment operations and maintenance data parameters are preloaded into the HRSD electrical Revit template and will automatically be applied into any appropriate families loaded into projects created from this template, provided they are categorized correctly.

Electrical Model

Project Milestone	Project Milestone Requirements
	o All equipment operations and maintenance data parameters can also be found in the HRSD shared parameter file (HRSD-Shared Parameter File.txt). • Inter-discipline coordination and conflict resolution (clash detection) completed with all conflicts resolved Contract drawings include: • Dimensions and annotation sufficient for the construction of all electrical equipment.
Substantial Completion	Model includes: • All discipline elements modeled to as-built size, type, and location. o All elements shall be model to correct dimensions and positional accuracy to the nearest ½". o It is not acceptable to modify dimensions to represent the accurate location of model elements. These elements must be relocated/remodeled to represent the as-built condition. • Model reflects specific equipment installed which may differ from the proposed model and drawings • Model reflects all changes made to proposed electrical design during construction • All electrical equipment models (families) include all operations and maintenance data parameters (IFC parameters) as required by HRSD. o All operations and maintenance data parameters are populated with correct data as provided by contractor Contract drawings include: • Dimensions and annotation sufficient for the construction of all electrical equipment • Dimensions and annotation modified to reflect as-built conditions

3.0 BIM Execution Plan

These requirements shall be used in conjunction with the project specific BIM Execution Plan. The BIM Execution Plan includes project specific planning including: team members and roles, software and releases to be used, file hosting location, model sharing methods, deliverable dates, client presentation methods, project LOD requirements, etc. and shall be set up by the project BIM lead in close coordination with the HRSD project manager.

4.0 Model File Creation

4.1 Project Templates

All HRSD project model files shall be created using HRSD's project template. Reference the BIM Execution Plan for software version requirements.

4.2 Orientation and Project Base Point

Project files should be modeled in the same orientation as they will be shown on contract drawing plan views. Refer to Paragraph 8.6 for more information on plan views. All project files shall be modeled such that the project base point is at the inside bottom left corner or the center of a round structure. The project base point shall be located at the finished floor elevation of the structure. The project base point must never be moved unclipped and should always be located at the project origin.

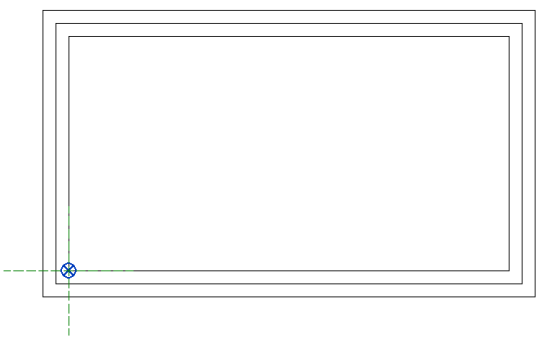

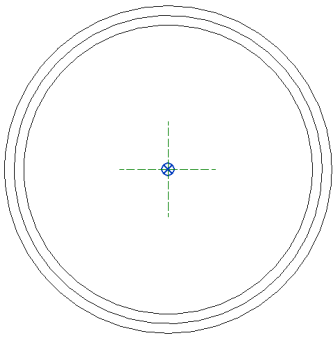

4.3 Revit Model Linking

All Revit models shall be linked origin to origin or by shared coordinates once shared coordinates have been established.

4.4 Level and Grids

All column grids and levels associated with main floors shall be copy-monitored from the structural model.

4.5 Model Naming Convention

Project files names shall contain the project number, contract number, area number and category abbreviation. The “Area Number” and “Area Abbreviation” shall correspond area numbers established in the BIM Execution Plan. The following is an example of a project file name: 12345-123-100-ABC-M.rvt. In this example, the project number is “12345-123,” the area number is 100, the structure (area abbreviation) is a “ABC” and it is a Mechanical file “M” (See discipline abbreviation table below). Most Revit files should fall into one of the categories below.

Discipline Abbreviation Table	
Discipline Abbreviation	**Discipline**
C	Civil/Site
M	Process Mechanical
S	Structural
A	Architectural
H	HVAC
P	Plumbing
FP	Fire Protection
E	Electrical
I	Instrumentation

SINGLE DISCIPLINE MODEL

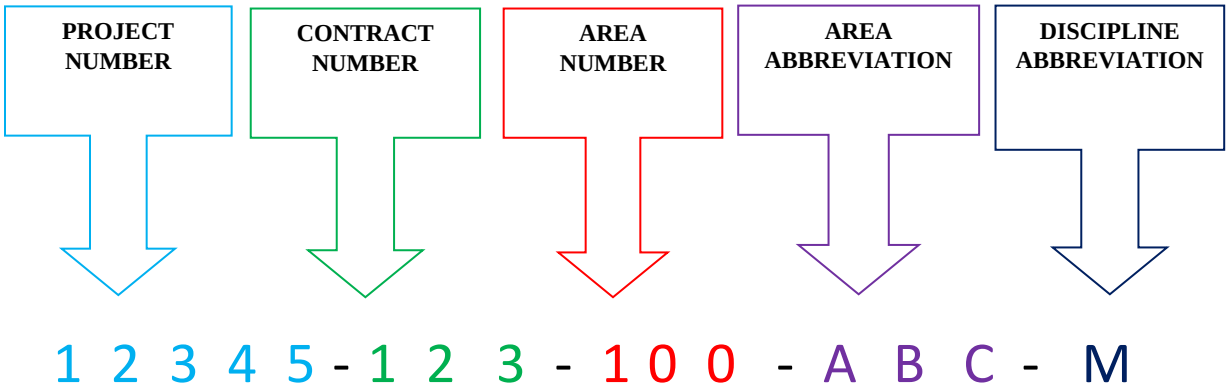

SITE PLANS

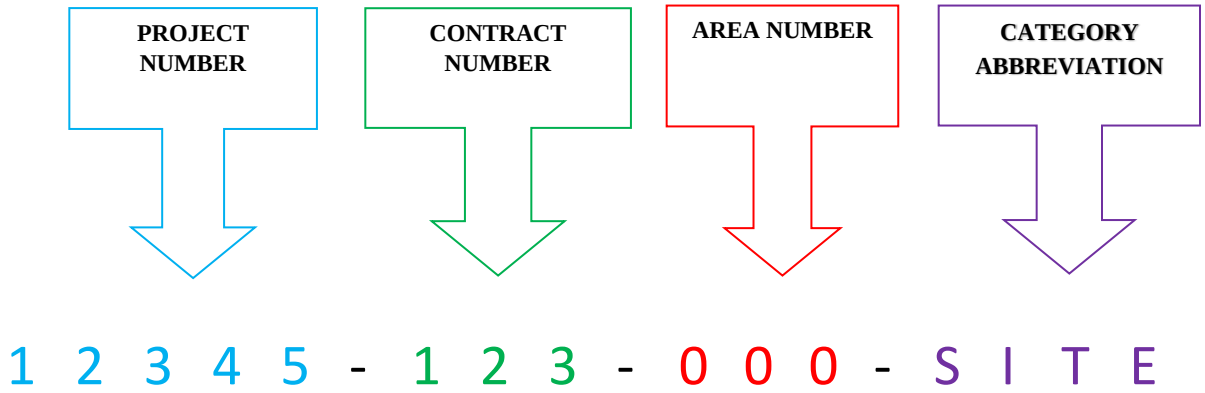

5.0 Shared Coordinates

A shared coordinate system must be established and common amongst all models no later than the 50% submittal. A shared coordinate system can be created earlier in the project life cycle per the directions specified in the Project BIM Execution Plan.

Care should be taken to ensure that all model geometry is within a 20-mile radius of the model's internal origin to ensure model accuracy. It should be noted that this requirement does not hold the location of a shared coordinate system to that 20-mile limit as this is related to the Virginia State Plane Coordinate System and is not model geometry.

5.1 State Plan Coordinate System

All project shared coordinates shall be based on North American Vertical Datum of 1988 (NAVD 88) and State Plane Coordinate System: VIRGINIA STATE PLANE COORDINATE SYSTEM, SOUTH ZONE, NORTH AMERICAN DATUM 1983 (NAD 83) (1993) (U.S. FEET).

5.2 Federated Site Model

A federated site model (a single model containing all discipline models for all areas within the scope of the project linked as references) shall be created before the 50% submittal unless specified otherwise in the BIM Execution Plan. The federated site model shall include all linked files of all structures/processes for all disciplines. All discipline models shall be located per the established shared coordinate system.

6.0 Family Creation

The HRSD template files contain general annotation and tags but do not contain equipment models. Equipment models created for project needs shall meet the criterial defined in this document and any criteria detailed in the Project BIM Execution Plan. All equipment families shall be created as the appropriate category type. Equipment families should never be categorized as "Generic Models" but rather as what they represent: "Mechanical Equipment", "Pipe Accessories", "Electrical Equipment", etc.

Families representing maintainable assets must be modeled in such a way that all independently maintainable assets within the family are also independently addressable. For example, a progressive cavity pump may have maintenance data requirements that differ from the electric motor attached to it. In such a case, the pump and attached motor would each need to be unique elements capable of hosting independent and different data. This is most easily accomplished by making individual maintainable assets within a family separate nested and "Shared" families.

6.1 Family Naming Convention

All families will be named using the following requirements:

- Keep file names as short as possible.
- All family names must be unique.
- File names will use 'title casing'.
- When adding descriptors (e.g., "Plug Valve Flanged 4-12in"), consider the order of the descriptors and the order they will appear in the project browser. Descriptors that would appear in several similar families should be the first of the descriptors if there are more than one.
- All family names shall adhere to the following format:

  Functional Type-Subtype-Manufacturer-Descriptor1-Descriptor 2

Name Format Descriptions		
Component	**Required or optional**	**Description**
Functional Type	Required	Names the element that the part will represent. For example, MCC or Door.
Subtype	As needed	Names the part type, for example, "Flanged" on a flanged valve.
Manufacturer	As needed	Manufacturer information not necessary when dimensions are governed by an industry standard (ANSI) or when the family is a generic component.
Descriptor	As needed	Examples: Size ranges (4-12in), Material (PVC, Steel, etc.)

6.2 Family Level of Detail

To maintain consistency and drawing clarity families must be created using the following requirements:

- Families shall be drawn with sufficient detail to clearly visually identify them from any view and will accurately represent overall size and key features of an object (LOD 300). Items too fine to be clearly represented when printed at a given drawing scale should not be included in a family. These items include but are not limited to bolts, buttons, hinges, etc. The inclusion of such items increases the time required to model a family without adding any needed clarity.
    - Simply put, a progressing cavity pump family should look like a progressing cavity pump when printed but should not print as an indistinct black blob on contract drawings.

- Families should feature enough visual information to convey features that impact the design of the project. For example, access hatches or manways on equipment that must be clear from obstruction or lifting hooks that must align with a monorail.

- Dimensions taken from manufacturers' literature should be rounded to the nearest minimum unit of measurement. See table below:

Minimum Units*	Examples
1/16"	Annotation symbols
1/4"	Small diameter pipe accessories (1" to 6"), Small equipment (occupying less than 2'-0"[3])
1/2"	Pipe accessories greater than 6" diameter, medium size equipment (small pumps, small control panels...)
1"	Large equipment (large pumps, large equipment...)

Flanged pipe connections or any other connection size dictated by an industry standard should be drawn to the nearest .01" per the standard. This includes any connectors associated with a family of any size. Pipe fittings that adhere to an industry standard, ANSI, should be drawn to those dimensions.

7.0 Shared Parameter File

The HRSD shared parameter file is provided as a repository for the IFC parameters present in the template as well as other standard parameters. It is not necessary for all parameters to be present in all families. The shared parameter file is provided simply to facilitate adding parameters to families as needed.

7.1 Shared Parameters in Models

Project needs may require the addition of shared parameters. Any project specific shared parameter file shall always start with the provided HRSD Shared Parameter file and all parameters unique to that project will be added to that file. The Project Shared parameter file contains all family and project parameters as well as all standard HRSD parameters.

7.2 Shared Parameters, Equipment Data and Asset ID

The provided HRSD shared parameter file contains parameters relating to HRSD equipment record standards. These parameters must be included in all project files. These parameters are present in the HRSD template files as well as the HRSD Shared Parameter.txt file. The parameters shall be applied to all equipment requiring regular maintenance. This will occur automatically, provided equipment is categorized properly and the appropriate HRSD template was used to create the project file. See paragraph 6.0 for more information.

All equipment requiring regular maintenance shall be assigned a unique asset ID. This asset ID shall match the asset ID found on the corresponding equipment data sheet. All data sheet information shall be applied to the corresponding equipment in the BIM model. Equipment data shall be applied to the completed as-built model prior to it being turned over to HRSD.

8.0 Contract Drawings

8.1 Sheet Size

All sheets created for HRSD shall be produced on ANSI D 22”x34” when printed full size.

8.2 Sheet Numbering

Sheets numbers shall consist of a discipline designator, an area number and a sequential individual sheet number as shown in the example below.

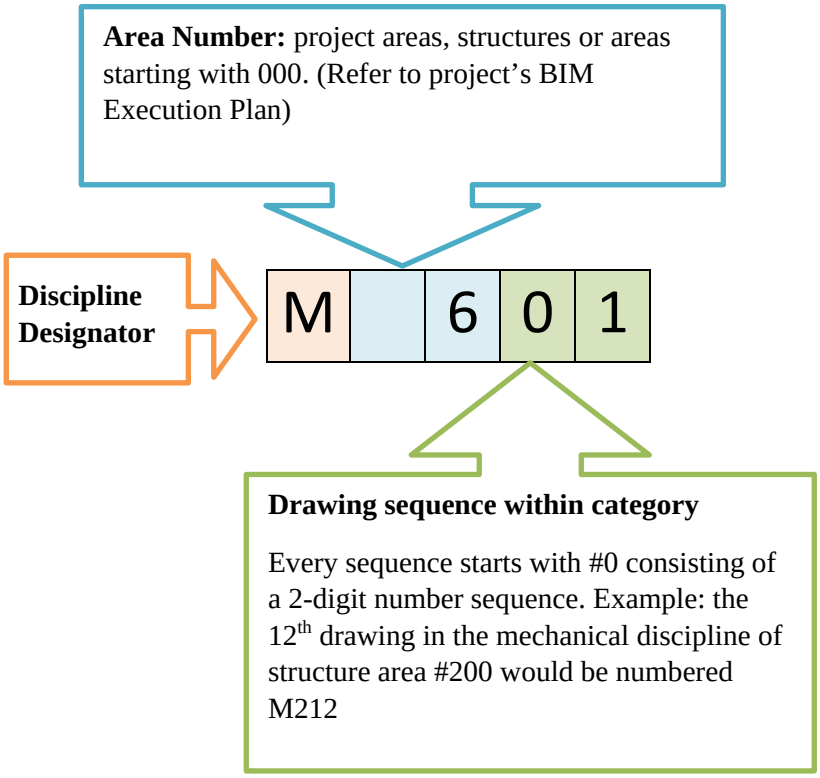

8.3 View Templates and Filters

View templates are predefined templates with view overrides in HRSD templates. View templates will be used in plans, section, tables, and detail views, to show consistency in all project drawings. With that in mind, understand that view templates will not do all the work for every element in every model; a good understanding of the graphic overrides that need to take place is a must. View templates should be used in all views. Presentation changes should be made in view templates, never in individual Visibility/Graphics Overrides on individual views.

A key portion of view templates are filters. Filters allow graphic overrides for elements that differ from the category in which it's modeled. Filters override elements based on different parameters, such as type name, family name, comments, etc. It is critical that all users familiarize themselves with information filters require to model elements properly. It is imperative that all modeling be consistent with the information that view filters require. When additional filters are required, filter names will use the following requirements:

- All filter names must be unique.
- Filter names will be case sensitive and use 'title casing'.
- Keep filter names as short as possible.

8.4 Text and Labels

HRSD project template files contain all text styles needed for annotating drawings. All annotation shall be created using the text styles provided in the template. See the table below for text style names and uses:

HRSD Text Styles			
Text Style Name	**Actual Text Height**	**Text Font**	**Drawing Use**
HRSD-06pt	1/16"	Arial	Annotation on figures
HRSD-08pt	5/64"	Arial	Annotation on figures
HRSD-10pt	3/32"	Arial	General contract drawing text
HRSD-14pt	9/64"	Arial	Titles, room names…
HRSD-18pt	3/16"	Arial	Label text
HRSD-20pt	13/64"	Arial	Titles, tables…

All annotation shall be placed per the following requirements:

- All leaders shall use a 15 Degree Filled Arrow
- All text with leaders shall be left aligned with leaders coming from the top left or bottom right of text strings.
- Labels shall be used wherever possible. "Dumb" text should only be used when the presented information cannot be pulled from the model element itself with the use of a label.
- All labels shall adhere to the same requirements and properties as regular text.

8.5 Schedules

Schedules shall be created per the following requirements:

- All tables or schedules shall use the HRSD-Schedule View Template.
- All schedule or table data shall be generated from project BIM data when possible.
- Unique parameters can be added for scheduling purposes. Refer to Paragraph 7.0.

8.6 Plans, Sections and Details

Plan views presented on contract drawings shall be at a preferred scale of 1/4” = 1’-0” or 3/16” = 1’-0” if necessary. Larger structures may need to be displayed at larger scales to fit on standard ANSI D sheets. In this case, enlarged plans should be used in conjunction with overall plans. Overall plans may be displayed at the minimum scale necessary for them to fit on sheets. Plan views shall be orientated such that plant or true north point up or to the left. It is acceptable for plant or true north to point to the right when necessary. Plan views should never be oriented such that plant or true north point down the page. Use the HRSD Plan Viewport callout option when placing plan views on sheets.

All sections and details in the same project or drawing series (i.e. 100, 200, etc.) shall have unique letters (sections) or numbers (details). In other words, the mechanical drawing series for area 200 may contain sections: A, B, C, etc. and details: 1, 2, 3, etc. and the mechanical drawing series for area 300 may also contain sections: A, B, C, etc. and details: 1, 2, 3, etc., but these letters and numbers shall not repeat within a series. This rule only applies to a single discipline. For example, Architectural, Structural and Mechanical can all have a section “A” and a Detail “1” within the same drawing series. The sections and details only need to be unique per discipline and drawings series. Section letters “I” and “O” shall not be used because of their similar appearance to numbers “1” and “0.” If a drawing series exceeds the number of available letters for sections, it is correct to number sections “AA,” “BB,” etc. When sections are cut in a detail view, they are considered minor sections. Minor Sections shall be Section A-A, B-B, etc. The numbering is sheet dependent, meaning you can have a minor section A-A on more than one sheet, but there cannot be two minor sections A-A on the same sheet.

Sections should be cut to the right or, when necessary, left. Sections should be cut looking up a page on a plan view. Sections should only be cut looking down a page only when required.

8.7 Drawing Submittal Format

All drawings shall be provided to HRSD as vector pdfs, printed directly to pdf, and not scanned. Drawings shall be printed full size (22x34in). Drawings shall be signed and sealed in accordance with the Commonwealth of Virginia DPOR requirements.

Section 8 - PER, Design, and Construction Submittal Requirements

A. Introduction - To reduce paper and to further implement the Oracle Unifier Project Management System (Unifier), the Engineering Department has implemented standards for storage of plans, Bid Documents, Operations and Maintenance (O&M) manuals, and shop drawings. It is critical that Engineering's Project archival systems maintain the official records of shop drawings, O&M manuals, and all other project related correspondence until such time as the project is closed out. Paper submittals from FIRM will continue for staff review and use with the number of copies detailed within this Section.

B. Requirements for Submittals – FIRM shall follow the requirements detailed in the listed paragraphs. Attachment A to this section is a tabular summary of the following submittal requirements.

1. Provide all stages of PER, plan, specification submittals, and supporting analysis in Portable Document Format (PDF) in addition to the traditional or desired number of paper copies for review. PDF files shall be formatted with bookmarks and each submittal shall be a single PDF as opposed to a collection of PDF files for individual chapters, plan sheets, etc.

2. For pipeline projects, seamless AutoCAD files (a seamless file is an individual file containing the entire proposed pipeline improvements) to be prepared and submitted to HRSD for the purpose of populating the GIS with new / relocated / rehabilitated pipelines. Show locations of pipeline alignment, pump stations, metering valves, gate/plug valves, air vents, etc. in support of establishing a numbering scheme for Valve Guides. The timing and content of submittals follow:

    a. Prepare and submit a "seamless" CAD file showing the proposed improvement limits at the 50% design stage. This information will be used to show the overall limits and alignment of the project.

    b. Prepare and submit a "seamless" CAD file with the proposed improvements and delineations for proposed Valve Guides at the Conformed Drawing submittal stage. The GIS/CAD Division will review the proposed Valve Guide locations and layouts and will assign numbers for Interim and Final Valve Guides. The HRSD Project Manager will coordinate with the FIRM to incorporate these assigned asset numbers into the generated Valve Guides.

    c. Submit to HRSD Project Manager unless otherwise detailed in the Professional Services Agreement / Amendment the following:

        i. One (1) AutoCAD seamless file of the project limits at the 50% design stage.
        ii. One (1) AutoCAD seamless file of proposed improvements and proposed Valve Guide delineations at the Conformed Documents stage.

iii. The Project Manager shall submit to the Engineer the assigned Valve Guide numbering scheme for production of Interim and Final Valve Guides.

3. Interim Record Drawing submittals must be submitted to HRSD Project Manager a minimum of 5 business days in advance of the scheduled tie-in for force main project or HRSD taking operational possession of the constructed facility. FIRM to incorporate this requirement into the Construction Bid Documents.

   a. Interim Record Drawings shall be prepared by the FIRM and transmitted to the HRSD Project Manager along with the tie-in plan. The Project Manager shall review a paper copy of the Interim Record Drawings for accuracy and completeness. Any required revisions shall be coordinated with the FIRM and the corrected version resubmitted back to the HRSD Project Manager.

   b. Interim Record Drawings shall be the following formats: (a) full size paper prints redlined with legible marks indicating changes, additions, or deletions; (b) PDF scan of the Interim Record Drawings.

   c. Refer to Section 6 - Drawings, Record Drawings, and Valve Guides in this manual for the latest information to be included with Record Drawings.

   d. Submit to HRSD Project Manager unless otherwise detailed in the Professional Services Agreement / Amendment the following:

      i. Four (4) 24” x 36” full size paper copies of Interim Record Drawings.
      ii. One (1) PDF scan of the Interim Record Drawings or in Unifier.

4. Interim Valve Guide submittal must be a minimum of 5 business days in advance of the scheduled tie-in for force main project or HRSD taking operational possession of the constructed facility. FIRM to incorporate this requirement into the Construction Bid Documents.

   a. Interim Valve Guides shall be prepared by the FIRM and transmitted to the HRSD Project Manager along with the tie-in plan. The Project Manager shall review a paper copy of the Interim Valve Guides for accuracy and completeness. Any required revisions shall be coordinated with the Engineer and the corrected version resubmitted back to the HRSD Project Manager.

   b. Interim Valve Guides shall be the following formats (a) AutoCAD “dwg”, (b) PDF, and (c) 8½” x 11” paper copies.

   c. Submit to HRSD Project Manager unless otherwise detailed in the Professional Services Agreement / Amendment the following:

      i. Four (4) 8½” x 11” paper copies of each Interim Valve Guide.
      ii. One (1) AutoCAD dwg file of each Interim Valve Guide in Unifier.

iii. One (1) PDF file of each Interim Valve Guide in Unifier.

5. Final Record Drawings submittal at project Final Completion stage. Refer to the Section 6 – "Drawings, Record Drawings, and Valve Guides" in this manual for the latest information to be included with Record Drawings.

   a. Final Record Drawings to be prepared by the FIRM and transmitted to the HRSD Project Manager. The Project Manager shall review a paper copy of the Final Record Drawings for accuracy and completeness. Any required revisions shall be coordinated with the FIRM and the corrected version resubmitted back to the HRSD Project Manager.

   b. Final Record Drawings shall be the following formats:

      i. AutoCAD dwg for each plan sheet,
      ii. A single PDF file for each volume of Record Drawings,
      iii. Full size paper prints *(HRSD Project Manager to determine the need)*.

   c. Submit to HRSD Project Manager unless otherwise detailed in the Professional Services Agreement / Amendment the following:

      i. Four (4) 24" x 36" full size paper copies of Final Record Drawings. (*HRSD Project Manager to determine the need)*
      ii. One (1) PDF file of each volume of Final Record Drawings in Unifier.
      iii. One (1) AutoCAD dwg file of each Final Record Drawing sheet in Unifier.

6. Final Valve Guides shall be prepared by the FIRM and submitted at project Final Completion stage. Refer to Section 6 – "Drawings, Record Drawings, and Valve Guides" in this manual the latest information to be included with Valve Guides.

   a. Final Valve Guides to be transmitted to the Project Manager. The Project Manager shall review a paper copy of the Final Valve Guides for correct numbering assignment as determined by HRSD GIS/CAD Division and completeness. Any required revisions shall be coordinated with the FIRM and the corrected version resubmitted back to the HRSD Project Manager.

   b. Final Valve Guides shall be the following formats (a) AutoCAD "dwg", (b) PDF, and (c) 8½" x 11" paper copies.

   c. Submit to HRSD Project Manager unless otherwise detailed in the Professional Services Agreement / Amendment the following:

      i. Four (4) 8½" x 11" paper copies of each Final Valve Guide. *(HRSD Project Manager to determine the need)*
      ii. One (1) AutoCAD dwg file of each Final Valve Guide in Unifier.
      iii. One (1) PDF file of each Final Valve Guide in Unifier.

7. Shop Drawings for each project shall be submitted to HRSD's Project Manager. Refer to Master Specification 01340 Submittals in Section 40 in this manual for further information. The following is in addition to Unifier submittals. The format for Shop Drawings is to be PDF and distributed by the Project Manager as follows:

    a. For force mains and gravity sewers – portable media containing PDF files at Substantial Completion stage to appropriate Chief of Interceptor Systems or in Unifier.

    b. For pump stations, PRS, flow meters, pressure sensors and other mechanical systems for Interceptor Systems – portable media containing PDF files prior to Substantial Completion stage to appropriate Chief of Interceptor Systems, to Operations Support Systems Manager, and Chief of Electrical and Energy Management or in Unifier.

    c. For treatment plants and outfalls – portable media containing PDF files prior to Substantial Completion or before taking operational ownership of a process or component to Operations Support Systems Manager, Chief of Electrical and Energy Management, and to appropriate Plant Manager or in Unifier.

8. Operations and Maintenance (O&M) Manuals for each project shall be submitted to HRSD's Project Manager. Refer to Master Specification 01340 Submittals in Section 40 in this manual for further information. Operation & Maintenance Manual Equipment List is included in Attachment B. The sheet in this spreadsheet labeled as "O&M Manual Equipment List" shall be prepared and submitted in Excel format to HRSD at the 100% design stage. HRSD Asset Management and Operations will review and approve the proposed list of equipment that would require O&M Manual submittal. This form will provide HRSD with the data to populate the Computerized Maintenance Management System (CMMS) and establish the system and process hierarchy. This form along with the "Equipment Record" and "Lubrication Summary" sheets in this spreadsheet shall be submitted in Excel format prior to substantial completion in accordance with Master Specification 01340 Submittals. The following is in addition to Unifier submittals. The format for O&M manuals is to be PDF and distributed by the Project Manager as follows:

    a. For pump stations, PRS, flow meters, pressure sensors and other mechanical systems for Interceptor Systems – portable media containing PDF files prior to Contractor / FIRM component training or operational ownership to appropriate Chief of Interceptor Systems, Operations Support Systems Manager, and Chief of Electrical and Instrumentation.

    b. For treatment plants – portable media containing PDF files prior to Contractor / FIRM component training or operational ownership to Operations Support Systems Manager, Chief of Electrical and Instrumentation, and to appropriate Chief of Treatment.

9. Conformed Documents specifics are defined in Section 16 – "Preparation of and Format for Conformed Documents". The following is in addition to Unifier submittals. HRSD's Project Manager shall make the necessary copies of the received PDF version of Conformed Documents for each project and distribute as follows:

    a. For force mains and gravity sewers – portable media containing PDF files prior to Pre-Construction Meeting to appropriate Chief of Interceptor Systems.

    b. For pump stations, PRS, flow meters, pressure sensors and other mechanical systems for Interceptor Systems – portable media containing PDF files prior to Pre-Construction Meeting to appropriate Chief of Interceptor Systems, Operations Support Systems Manager, and Chief of Electrical and Instrumentation.

    c. For treatment plants and outfalls – portable media containing PDF files prior to Pre-Construction Meeting to Operations Support Systems Manager, and Chief of Electrical and Instrumentation, appropriate Chief of Treatment.

10. Soil Resistivity / Corrosivity Analyses, when performed to support project design, must be submitted in accordance with the following requirements:

    a. One (1) PDF file of each soil resistivity / corrosivity report, separate from the Conformed Specifications package, uploaded to Unifier.

    b. HRSD standard soil data spreadsheet (1) populated with analysis and result values A blank template is available by request from the GIS/CAD Division. Key required attributes include
        i. Date of field measurement or soil sample collection
        ii. Name of soil corrosivity analysis firm
        iii. Soil sample and field resistivity measurement locations as Virginia State Plane coordinates to an accuracy of ± 5 ft.
        iv. Various soil resistivity and chemistry attributes.

Attachment A - Summary of Major Submittals to HRSD

Submittal Description	Submittal Format	Number of Copies	Distribution List	Reference Section
PER Draft	PDF upload to Unifier	N/A	• Engineering Library • Operations Department	Section 8 - PER, Design, and Construction Submittal Requirements
PER Draft	8 ½" x 11" double sided paper bound copy	TBD	• Project Manager • Operations Department • Engineering Director	*{Number of copies defined in Professional Services Agreement / Amendment}*
Infrastructure Condition Assessment Plan	Incorporated into PER draft and final; or, for projects without a PER	TBD	• Project Manager • Chief of Asset Management	Section 20 – Condition Assessment Protocol for Replaced or Abandoned Pipelines
Building Information Model (BIM) Execution Plans	PDF uploaded to Unifier	TBD	• Project Manager • Chief of Asset Management	Section 7 – HRSD Building Information Model (BIM) Requirements
PER Final	PDF upload to Unifier	N/A	• Project Manager • Engineering Library • Engineering Director • Operations Department	Section 8 - PER, Design, and Construction Submittal Requirements
PER Final	8 ½" x 11" double sided paper bound copy	3	• Project Manager • Engineering Director	*{Number of copies defined in Professional Services Agreement / Amendment}*
Soil Corrosivity Analysis	PDF and spreadsheet upload to Unifier	1	• Engineering Library • Project Manager • GIS/CAD Group	Section 8 - PER, Design, and Construction Submittal Requirements
50% Design Drawings	PDF and DWG upload to Unifier	N/A	• Engineering Library • Project Manager • Operations Department • GIS/CAD Group	Section 8 - PER, Design, and Construction Submittal Requirements

Attachment A - Summary of Major Submittals to HRSD

Submittal Description	Submittal Format	Number of Copies	Distribution List	Reference Section

50% Design Drawings	Full size and/or true half scale prints	TBD	• Project Manager
			• Chief of D&C
			• Operations Department
			  o Support System Manager (2 copies)
			  o Chief of Electrical and Instrumentation (5 copies)
				{Number of copies defined in Professional Services Agreement / Amendment}

50% Design Seamless AutoCAD file (Linear projects)	AutoCAD dwg upload to Unifier	N/A	• GIS/CAD Group	Section 8 - PER, Design, and Construction Submittal Requirements
50% Design BIM (Vertical projects)	Revit .rvt upload to BIM360 or other approved method as identified in the BIM Execution Plan	N/A	• Project Manager • GIS/CAD Group	Section 7 – BIM Requirements
90% Design Drawings	PDF and DWG upload to Unifier (linear projects). Revit upload to BIM 360 or other approved method (vertical projects).	N/A	• Engineering Library • Project Manager • Operations Department • GIS/CAD Group	Section 8 - PER, Design, and Construction Submittal Requirements

Attachment A - Summary of Major Submittals to HRSD

Submittal Description	Submittal Format	Number of Copies	Distribution List	Reference Section

90% Design Drawings	Full size and/or true half scale prints	TBD	• Project Manager
			• Chief of D&C
			• Operations Department
			  o Support System Manager (2 copies)
			  o Chief of Electrical and Instrumentation (5 copies)
				{Number of copies defined in Professional Services Agreement / Amendment}

90% Design Specifications	PDF upload to Unifier	N/A	• Engineering Library • Project Manager • Operations Department	Section 8 - PER, Design, and Construction Submittal Requirements

90% Design Specifications	8 ½" x 11" double sided paper bound copy	TBD	• Project Manager
			• Chief of D&C
			• Operations Department
			  o Support System Manager (2 copies)
			  o Chief of Electrical and Instrumentation (5 copies)
				{Number of copies defined in Professional Services Agreement / Amendment}

100% Design Drawings	PDF and DWG upload to Unifier (linear projects). Revit upload to BIM 360 or other approved method (vertical projects).	N/A	• Engineering Library • Project Manager • Operations Department • GIS/CAD Group	Section 8 - PER, Design, and Construction Submittal Requirements Section 7 – BIM Requirements

Attachment A - Summary of Major Submittals to HRSD

Submittal Description	Submittal Format	Number of Copies	Distribution List	Reference Section

100% Design Drawings	Full size and/or true half scale prints	TBD	• Project Manager
			• Chief of D&C
			• Operations Department
			  o Support System Manager (2 copies)
			  o Chief of Electrical and Instrumentation (5 copies)
				{Number of copies defined in Professional Services Agreement / Amendment}

100% Design Specifications	PDF upload to Unifier	N/A	• Engineering Library • Project Manager • Operations Department	Section 8 - PER, Design, and Construction Submittal Requirements

100% Design Specifications	8 ½" x 11" double sided paper bound copy	TBD	• Project Manager
			• Chief of D&C
			• Operations Department
			  o Support System Manager (2 copies)
			  o Chief of Electrical and Instrumentation (5 copies)
				{Number of copies defined in Professional Services Agreement / Amendment}

Operation & Maintenance Manual Equipment List – Exhibit C1 (Review / Approval) at 100% Design Stage	Excel upload to Unifier		• Project Manager • Asset Management • Operations Department	Section 8 - PER, Design, and Construction Submittal Requirements
Bid Documents (Drawings)	PDF upload to Unifier	N/A	• Engineering Library • Project Manager	Section 8 - PER, Design, and Construction Submittal Requirements
Bid Documents (Drawings)	Full size prints	2	• Project Manager • Chief of D&C	*{Number of copies defined in Professional Services Agreement / Amendment}*

Attachment A - Summary of Major Submittals to HRSD

Submittal Description	Submittal Format	Number of Copies	Distribution List	Reference Section
Bid Documents (Specifications)	PDF upload to Unifier	N/A	• Engineering Library • Project Manager	Section 8 - PER, Design, and Construction Submittal Requirements
Bid Documents (Specifications)	8 ½" x 11" double sided paper bound copy	2	• Contract Specialist • Project Manager	*{Number of copies defined in Professional Services Agreement / Amendment}*
Conformed Documents (Drawings)	PDF upload to Unifier	N/A	• Engineering Library • Project Manager • GIS/CAD Group • Operations Department	Section 16 - Preparation of and format for Conformed Documents *{Number of copies defined in Professional Services Agreement / Amendment}*
Conformed Documents (Drawings)	Full size and/or true half scale prints	TBD	• Operations Department o Full size set for Electrical staff	Section 16 - Preparation of and format for Conformed Documents
Conformed Documents (Seamless AutoCAD file with identified Valve Guide boundaries)	AutoCAD DWG upload to Unifier (linear projects). Revit upload to BIM 360 or other approved method (vertical projects).	N/A	• GIS/CAD Group	Section 8 - PER, Design, and Construction Submittal Requirements Section 7 – BIM Requirements
Conformed Documents (Specifications)	PDF upload to Unifier	N/A	• Engineering Library • Project Manager • Operations Department	Section 16 - Preparation of and format for Conformed Documents
Conformed Documents (Specifications)	8 ½" x 11" double sided paper bound copy	TBD	• Project Manager • Admin • Operations Department • Chief of D&C	Section 16 - Preparation of and format for Conformed Documents *{Number of copies defined in Professional Services Agreement / Amendment}*

Attachment A - Summary of Major Submittals to HRSD

Submittal Description	Submittal Format	Number of Copies	Distribution List	Reference Section
Shop Drawings (Review / Approval)	PDF of each submitted shop drawing upload to Unifier	N/A	• Project Manager	Section 8 - PER, Design, and Construction Submittal Requirements
Operation & Maintenance Manuals (Review / Approval)	PDF of each submitted shop drawing upload to Unifier	N/A	• Project Manager	Section 8 - PER, Design, and Construction Submittal Requirements
Equipment Record – Exhibits C2 and C3 (Review / Approve)	Excel of each submitted O&M Manual		• Asset Management • Operations Department	Section 8 - PER, Design, and Construction Submittal Requirements
Shop Drawing (approved submittals at Substantial Completion)	PDF on portable media	1	• Chief of Interceptor System or Treatment • Support System Manager • Treatment Process Engineer	Section 8 - PER, Design, and Construction Submittal Requirements
Operation & Maintenance Manuals (approved submittals at Substantial Completion)	PDF on portable media	1	• Chief of Interceptor System or Treatment • Support System Manager • Treatment Process Engineer	Section 8 - PER, Design, and Construction Submittal Requirements

Attachment A - Summary of Major Submittals to HRSD

Submittal Description	Submittal Format	Number of Copies	Distribution List	Reference Section
Equipment Record – Exhibits C2 and C3 (approved submittals at Substantial Completion)	Excel of each submitted O&M Manual		• Asset Management • Operations Department	Section 8 - PER, Design, and Construction Submittal Requirements
Interim Record Drawings (at Substantial Completion Stage)	Full size prints	4	• Project Manager • Operations Department • Full size set for Electrical staff	Section 8 - PER, Design, and Construction Submittal Requirements
Interim Record Drawings (at Substantial Completion Stage)	PDF upload to Unifier	N/A	• Engineering Library • Project Manager • GIS/CAD Group	Section 8 - PER, Design, and Construction Submittal Requirements
Interim Valve Guides (at Substantial Completion Stage)	8 ½" x 11" paper prints	4	• Project Manager • Operations Department	Section 8 - PER, Design, and Construction Submittal Requirements
Interim Valve Guides (at Substantial Completion Stage) Including final version of digital spreadsheet containing X,Y,Z coordinates	PDF and AutoCAD upload to Unifier	N/A	• Project Manager • GIS/CAD Group	Section 8 - PER, Design, and Construction Submittal Requirements
Final Record Drawings (at Final Completion Stage)	Full size prints	4	• Project Manager • Operations Department • Full size set for Electrical staff	Section 8 - PER, Design, and Construction Submittal Requirements

Attachment A - Summary of Major Submittals to HRSD

Submittal Description	Submittal Format	Number of Copies	Distribution List	Reference Section
Final Record Drawings (at Final Completion Stage)	PDF and AutoCAD upload to Unifier (linear projects). Revit upload to BIM 360 or other approved method (vertical projects).	N/A	• Engineering Library • Project Manager • GIS/CAD Group	Section 8 - PER, Design, and Construction Submittal Requirements Section 7 – BIM Requirements
Final Valve Guides (at Final Completion Stage)	8 ½" x 11" paper prints	TBD	• Project Manager • Operations Department	Section 8 - PER, Design, and Construction Submittal Requirements *{Number of copies defined in Professional Services Agreement / Amendment}*
Final Valve Guides (at Final Completion Stage)	PDF and AutoCAD upload to Unifier	1	• Project Manager • GIS/CAD Group	Section 8 - PER, Design, and Construction Submittal Requirements

End of Section

Equipment Record

O&M Manual Equipment List

#	*Equipment Description	*Equipment Location	*Spec. Section	*Drawing Sheet #	CMMS EID (Completed by HRSD)
1					
2					
3					
4					
5					
6					
7					
8					
9					
10					
11					
12					
13					
14					
15					
16					
17					
18					
19					
20					
21					
22					
23					
24					
25					
26					
27					
28					
29					
30					
31					
32					
33					
34					
35					
36					
37					
38					
39					
40					
41					
42					
43					
44					
45					

HRSD

Equipment Record

Equipment Maintenance Data Summary

*Project Name:				Page No.	1	of	
*Equip. Description		*Date Installed		*Date Started			
*Equip. Location		*Cost		*Estimated Life			
Project Equip. Tag No.		*Shop Dwg Trans No.		*Spec Sec.			
*Equip. Manufacturer							
Manuf. Address				Phone Number			
Local Vendor							
Vendor Address				Phone Number			
Warranty Type				Warranty Duration			
Warranty Details				Warranty Expires			

*BREAK-IN MAINTENANCE REQUIREMENT (INITIAL OIL CHANGES, ETC.)	D	W	M	Q	S	A	Hours

*PREVENTIVE MAINTENANCE REQUIREMENTS	D	W	M	Q	S	A	Hours
None required							

*RECOMMENDED SPARE PARTS

Part No.	Part Name	Quantity	Cost

*ELECTRICAL NAMEPLATE DATA

Equip.							
Make							
Serial No.				ID No.			
Model No.				Frame No.			
HP		V.		Amp.		HZ	
PH		RPM		SF		Duty	
Code		Ins. Cl.		Des		Type	
Nema		C. Amb.		Temp Rise		Rating	
Misc.							

*MECHANICAL NAMEPLATE DATA

Equip.							
Make							
Serial No.				ID No.			
Model No.				Frame No.			
HP		RPM		Cap.		Size	
TDH		IMP. Sz.		Des		CFM	
PSI		Assy. No.		Case No.			
Misc.							

Use multiple tabs of Exhibit C2 as needed.

Equipment Record

Lubrication Summary

Equipment Description		Project Equip. Tag No.		Page		of	

Lubricant Point						
Lubricant Type		Manufacturer	Product	AGMA #	SAE #	ISO
	1					
	2					
	3					
	4					
	5					

Lubricant Point						
Lubricant Type		Manufacturer	Product	AGMA #	SAE #	ISO
	1					
	2					
	3					
	4					
	5					

Lubricant Point						
Lubricant Type		Manufacturer	Product	AGMA #	SAE #	ISO
	1					
	2					
	3					
	4					
	5					

Lubricant Point						
Lubricant Type		Manufacturer	Product	AGMA #	SAE #	ISO
	1					
	2					
	3					
	4					
	5					

Lubricant Point						
Lubricant Type		Manufacturer	Product	AGMA #	SAE #	ISO
	1					
	2					
	3					
	4					
	5					

OBJECTID	DATA_COLLECTION_DATE	Field_Surveyor	Surveying_Firm	Resistance_1	Resistivity_1	Resistivity_Depth_1	Barnes_Layer_Resistivity_1	Barnes_Layer_Depth_1	Resistance_2	Resistivity_2
739	2020-08-17 0:00:00	Erin Nelson	CorrPro	11.73	6739	3	6739	0-3	7.791	8952

Resistivity_Depth_2	Barnes_Layer_Resistivity_2	Barnes_Layer_Depth_2	Resistance_3	Resistivity_3	Resistivity_Depth_3	Barnes_Layer_Resistivity_3	Barnes_Layer_Depth_3	Corrosivity	Public_Utility
6	13329	3-6	6.231	10739	9	17878	6-9		HRSD

Horiz_Accuracy	X	Y
5	12056624.87	3561701.021

OBJECTID	SAMPLE_COLLECTION_DATE	As_Received_Resistivity	Wetted_Resistivity	pH	Moisture_Percent	Chlorides	Sulfates	Conductivity	Sulfate_Reducing_Bacteria	RedOx	Sulfides	Sample_Depth	Corrosivity
8	2020-08-17 0:00:00		5200	8.17		28	75	40.1	N				

Survey_Firm	Public_Utility	X	Y
CorrPro	HRSD	12056663.55	3561638.077

OBJECTID	Min_Resist	Max_Resist	Corrosivity
1	0	2000	Severe
2	2001	5000	Moderate
3	5001	10000	Mild
4	10001	1000000	Progressively Less Corrosive

Section 9 - Real Estate Acquisition and Plat Guidelines

A. Introduction - Professional Services firms (FIRM) and staff involved with design and construction projects often must obtain permanent and temporary easements or land acquisition to accommodate new pipelines, new or rehabilitated pump stations, storage tanks, and treatment plant expansions. This guideline identifies steps and timing for coordination with HRSD's Real Estate Manager during a typical project. It is important for FIRM and staff to properly account for the duration of time that a typical land acquisition process will take when preparing for bid advertisement of construction projects.

B. Real Estate Schedule vs. Project Schedule

1. Exhibit A in this Section shall be used as a template for the timing and stage for submittals related to real estate matters to HRSD's Real Estate Manager.

2. The FIRM is to build sufficient time into design and approval schedules to account for real estate acquisition prior to advertising a project for construction bids.

C. Easements

1. Plat – Refer to the Standard Details section in this manual and Attachment A in this section for sample plats showing critical information required to meet HRSD needs.

2. The FIRM shall prepare plats for all required easements, permanent temporary, and acess ingress/egress in a manner to meet the needs of HRSD and to be in accordance with Virginia State Library and Archives Standards for Plats and be recordable in the appropriate jurisdiction.

3. The FIRM shall provide an editable list by project parcel number (1,2,3,4,….) of the names, addresses, contact numbers, GPIN,Tax Map number, desired use of parcel (Permanent, Temporary, Access Ingress/Egress) and size, of the current property owners for each plat utilizing the HRSD Project Acquisition Tracking log (Attachment B).

4. Plat shall not exceed 8-½ inch x 14 inch without prior agreement.

5. FIRM shall provide HRSD with an electronic copy in pdf format and three paper copies of the final plats.

6. FIRM shall coordinate with HRSD's Real Estate Manager as necessary to resolve any issues uncovered in the title search or other phases of the process.

7. For plats, minimum permanent easement width shall be 30-feet with centerline of pipe at the one-third point. For pipelines in easements along the right of way, permanent easement shall provide a minimum of ten feet from centerline of pipe to the edge of easement away from the right of way. Provide temporary easement widths as required for construction purposes. Access Ingress/Egress easement widths shall be determined per project and future operation and maintenance requirements.

8. An electronic copy of the plats shall be provided in AutoCAD (.DWG) format at the release indicated in the RFP, or otherwise approved format. Two Virginia State Plane Coordinates shall be provided to tie the easement and/or property boundary to the Virginia State Plane grid. A reference to the horizontal datum including the realization (e.g. NAD83(1986), NAD83(HARN), NAD83(CORS96)) shall be included on the plat.

D. Design Engineer's Estimate – when requested, the FIRM shall produce a replacement cost estimate to be used in procuring a title insurance policy for a parcel and structure.
   - Attachment C – Sample – Engineer's Estimate

E. Justification Memorandum – when requested, the FIRM shall produce a justification memorandum to support the acquisition cost for a property or easement. The justification memorandum should consider, at a minimum, the impact of the acquisition or easement(s) on design, permitting, maintenance of traffic, construction costs, project schedule and regulatory deadlines, community and social justice, as well as the impacts to the property owner. The memorandum should include the FIRM's recommendation statement.
   - Attachment D – Sample - Design Consultant
   - Attachment E– Sample - Real Estate Consultant

F. Phase 1, Environmental Site Assessment (ESA) - for each fee simple acquisition, the FIRM shall prepare a Phase 1, ESA. This requirement can only be waived by the Director of Engineering on the recommendation of the Real Estate Manager.
   - Attachment F – Sample – Phase 1 ESA

G. Location Map – when requested, the FIRM shall produce a Location Map for the fee simple or easement acquisition.
   - Attachment G – Sample – Location Map

Exhibit A

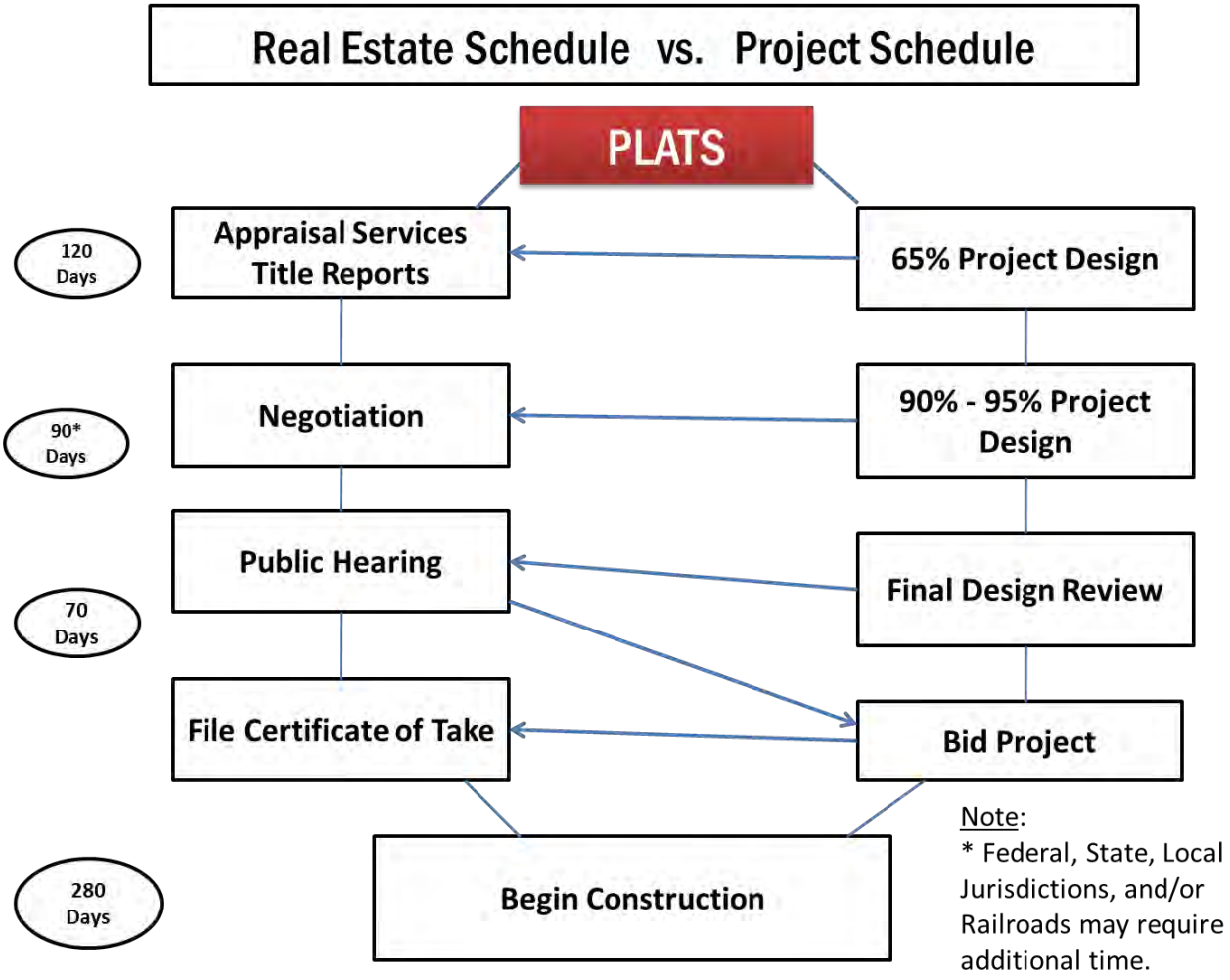

End of Section

PROJECT PARCEL NO. E-XXX HRSD CIP#XXXXXXXX – PROJECT NAME

PROPERTY OF: XXXX
PROPERTY ADDRESS: XXXX
OWNER ADDRESS: XXXX

PROPERTY ADDRESS: XXXX
OWNER ADDRESS: XXXX
TAX MAP #: XXXX

USE RESIDUAL PARCEL AREA ONLY WHEN REQUIRED

AREA TABLE													
TAX MAP NO.	TOTAL PARCEL AREA		15' PERMANENT INGRESS /EGRESS EASEMENT			30' PERMANENT HRSD UTILITY EASEMENT			VARIABLE WIDTH TEMPORARY HRSD CONSTRUCTION EASEMENT			RESIDUAL PARCEL AREA	
	SQ. FT.	ACRES	AREA	SQ. FT.	ACRES	AREA	SQ. FT.	ACRES	AREA	SQ. FT.	ACRES	SQ. FT.	ACRES
–	–	–	"A"	–	–				"D"	–	–	–	–
–	–	–	–	–	–	–	–	–	"E"	–	–	–	–
			"B"	–	–	"C"	–	–	"F"	–	–		
			TOTAL	–	–	TOTAL	–	–	TOTAL	–	–		

NOTES:

1. MERIDIAN SOURCE WAS BASED ON VIRGINIA STATE PLANE COORDINATE SYSTEM, SOUTH ZONE (NAD83(HARN)). COORDINATE VALUES ARE SHOWN IN U.S. SURVEY FEET.

2. THIS PLAT WAS PREPARED WITHOUT THE BENEFIT OF A TITLE REPORT AND THEREFORE MAY NOT SHOW ALL EASEMENTS OR PROPERTY REFERENCES THAT AFFECT THIS PROPERTY.

3. THIS SURVEY DOES NOT CONSTITUTE A BOUNDARY SURVEY. PARCEL AREAS SHOWN ARE APPROXIMATE AND BASED ON PLATS AND DEEDS OF RECORD, OR CITY TAX RECORDS AND ARE APPROXIMATE IN NATURE.

E-XXX

PLAT SHOWING

XX' PERMANENT HRSD UTILITY EASEMENT, VARIABLE WIDTH TEMPORARY HRSD CONSTRUCTION EASEMENT AND XX' PERMANENT INGRESS/ EGRESS EASEMENT

TO BE ACQUIRED FROM

XXXX

BY

HAMPTON ROADS SANITATION DISTRICT

XXXX BOROUGH – CITY OF XXXX, VIRGINIA
HRSD CIP#XXXXXXXX – PROJECT NAME
DATE : XXXX

REVISION		REVISION	
1		2	

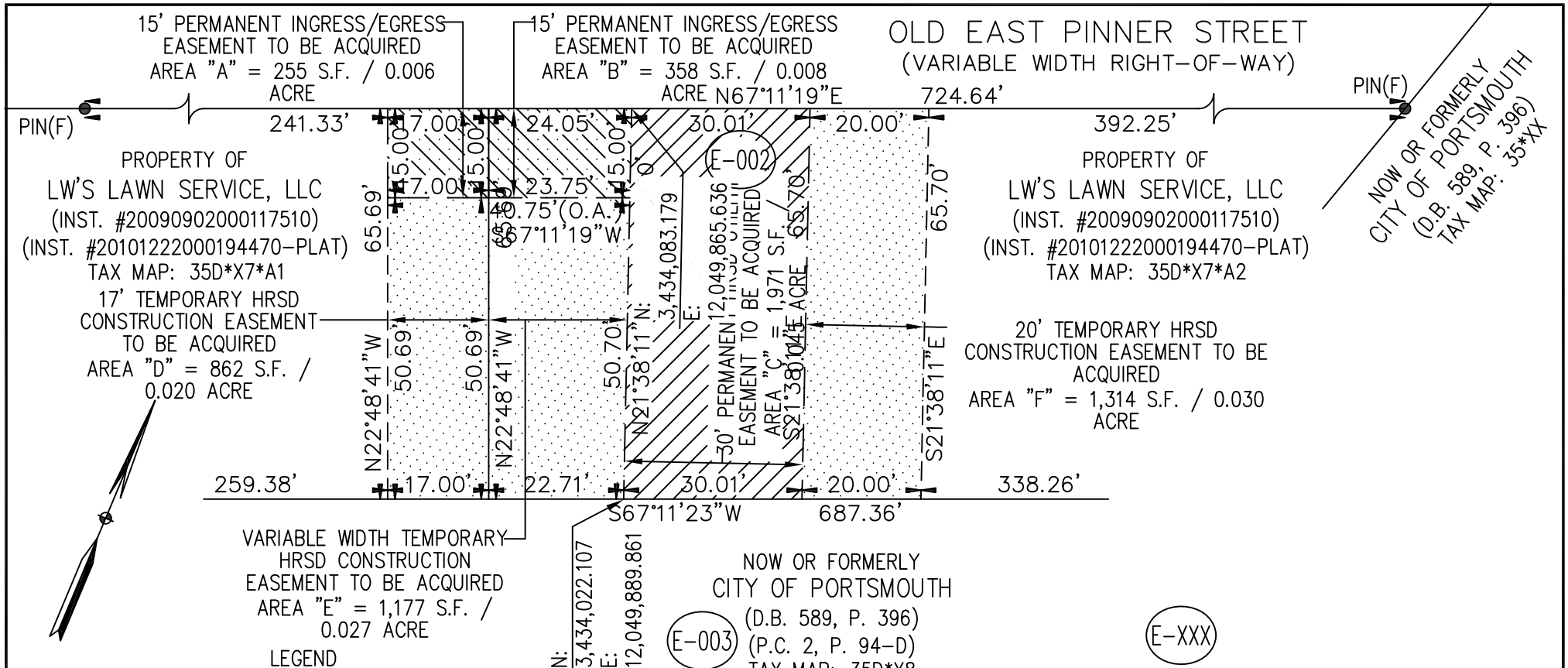

PLAT SHOWING

XX' PERMANENT HRSD UTILITY EASEMENT, VARIABLE WIDTH TEMPORARY HRSD CONSTRUCTION EASEMENT AND XX' PERMANENT INGRESS/ EGRESS EASEMENT

TO BE ACQUIRED FROM

XXXX

BY

HAMPTON ROADS SANITATION DISTRICT

XXXX BOROUGH – CITY OF XXXX, VIRGINIA
HRSD CIP#XXXXXXXX – PROJECT NAME
DATE : XXXX

0 25 50 75 FEET
GRAPHIC SCALE

REVISION		REVISION	
1		2	

SEE SHEET 1 FOR ALL NOTES AND AREA TABLE.

PROJECT NAME: **CIP#**

Consultant Name/Firm: **HRSD PM:**

PERM. EASEMENT NO./ TEMP. EASEMENT NO.	PROPERTY OWNER	PHYSICAL ADDRESS	CONTACT NUMBER
PHASE 1 ONLY			
1P / 1T	Smith, John	111 G Avenue, Suffolk, VA 23434	(XXX) XXX-XXXX
PHASE 1 & PHASE 2			
5IE	ABC Company (INST #030022333)	1434 Air Rail Avenue, Virginia Bch VA 23455	(XXX) XXX-XXXX
PHASE 2 ONLY			
9T	ABC Company (INST #030022333)	1434 Air Rail Avenue, Virginia Bch VA 23455	(XXX) XXX-XXXX

P = Permananent
T = Temporary
I/E = Ingress/Egress

TAX MAP NO.	EXISTING EASEMENT	PROPOSED EASEMENTS			UTILITY OWNER	SHEET NO.
		TEMPORARY (AC.)	PERMANENT UTILITY (AC.)	PERMANENT INGRESS (AC.)		
35D*F*A	HRSD ~ D.B. 34, P.804	0.10	0.05	-	HRSD	C-1
35*147		-	-	0.09	HRSD & CITY	02 C-102
35*58*A	HRSD ~ D.B. 36, P.765	0.24	-	-	HRSD	

REMARKS	Title Order	Title Recv	Appraisal Order	Appraisal Recv	Appraisal Amount	Offer Package Sent	Follow up Contact1	Follow up Contact 2	Followup Contact 3

Hazen and Sawyer
4500 Main Street, Suite 500
Virginia Beach, VA 23462 • 757.497.0490

October 24, 2022

Karen Scarano, RWP
HRSD Real Estate Manager
1434 Air Rail Ave
Virginia Beach, VA 23455

Re: HRSD Lafayette Norview-Estabrook PS Replacements (VP 015400) – Luxembourg Pump Station #113 - Construction Replacement Value

Dear Karen:

This letter provides an estimated Fall 2022 construction replacement value for the Luxembourg Pump Station #113 replacement associated with the HRSD Lafayette Norview-Estabrook PS Replacements (VP015400) project. The current Class 1 construction cost estimate was used to determine the replacement value of the pump station. The cost estimate and pump station property information is listed below:

Owner – Hampton Roads Sanitation District
Address – 3030 Luxembourg Ave, Norfolk, VA 23509
GPIN # 1438-56-1506
Account: 8445-6500
Construction Replacement Value – 4.8 million
Property Acquisition Cost -

Please do not hesitate to contact me at 757-803-5027 or smorrow@hazenandsawyer.com.

Sincerely,

Scott Morrow, PE
Senior Associate
Commonwealth of Virginia PE License #XXXXX

Job no 32452-001

MEMORANDUM

2901 South Lynnhaven Road,
Suite 300
Virginia Beach, VA 23452
Phone 757.498.4123
www.rkk.com

Date: March 29, 2022
To: Tim Marsh, PE
From: Ryan Delo, PE
Re: Justification for Property Acquisition – Norview Estabrook Division I (VP010920)

Rummel, Klepper & Kahl, LLP (RK&K) is contracted with the Hampton Roads Sanitation District (HRSD) to provide engineering services for the replacement of three sections of the Norview Estabrook Force Main located in the City of Norfolk. The force main sections located in the Winona, Lafayette Annex, Fairmont Manor and Estabrook neighborhoods, convey flows from City PS #21 located in Fairmont Park, City PS #57 (HRSD is in the process of acquiring) located near Sherwood Forest Elementary School, and HRSD PS #105 located along Chesapeake Boulevard. The existing cast iron (CI) force main sections were constructed in the 1950's and achieved their useful lifespan. The replacement force main sections include:

- 18-inch Force Main, Phase III (VP016700) – Replacement of 2,182 LF of 18-inch CI Force Main along Lasalle Avenue and Tidewater Drive, referred to herein as the Lasalle Avenue Section.
- 18-inch Force Main, Phase II, Section 2 (VP010920) – Replacement of 1,071 LF of 18-inch CI Force Main along Chesapeake Boulevard, referred to herein as the Chesapeake Boulevard Section.
- 12-inch Force Main (VP016500) – Replacement of 3,292 LF of 12-inch CI Force Main along Robin Hood Road, referred to herein as the Robin Hood Road Section.

The force main sections were identified for replacement due to a history of failures in the area with force mains of this material and vintage. HRSD is also in the process of upgrading PS #105 (Chesapeake Boulevard) and intends on replacing the downstream force main sections prior to completion of the upgrades. Project completion deadlines include:

- May 2024 – Completion of the Chesapeake Blvd. PS #105 Replacement
- May 2025 – Completion of the Lasalle Avenue, Chesapeake Boulevard, and Robin Hood Road Sections in advance of the Rehabilitation Action Plan, Phase 2 deadline

The *Final Alignment Analysis – Norview Estabrook Division I, Technical Memorandum* (TM), dated March 2, 2021, recommended alignments for replacement of the three force main sections. HRSD accepted the recommended alignments and is on schedule for completion on 12/1/2024. This completion date provides five months for any construction delays or extended lead times. This memorandum provides justification for the property acquisition required to construct the recommended alignment for the Chesapeake Boulevard Section.

Alternative 1 – Purchase 3310 Cromwell Drive

3310 Cromwell Drive was appraised for $135,000. The property owner countered the appraisal with an asking price of $350,000. The property has multiple encumbrances and restrictions which will expire in 10 years, which could impact property value. Purchase of the property will provide adequate space for installation of the force main by guided auger bore across the adjacent rail line, construction staging, overnight staging for tractor trailer deliveries while the entrance to 3307 Chesapeake Boulevard is closed, and can be sold in the future retaining an easement for the force main. In addition to the purchase of 3310 Cromwell Drive, this alternative is dependent upon obtaining an easement from 3307 Chesapeake Boulevard.

Alternative 2 – Easement on 3310 Cromwell Drive

Easement acquisition is an alternative solution to the purchase of 3310 Cromwell Drive. The owner has not been receptive to an easement as it will add an additional restriction to the existing encumbrances and restrictions which limit development. Condemnation through eminent domain would likely be required to acquire the easement. The HRSD easement would further reduce the current build-able area and further assessment of the site to determine if the property would be classified as an uneconomical remnant should be preformed. The easement acquisition through eminent domain will only cover the permanent 30-foot easement around the force main, negotiation for purchase of an additional construction easement will be required to accommodate the pit for installation under the railroad. In addition to the easement on 3310 Cromwell Drive, this alternative is dependent upon obtaining an easement from 3307 Chesapeake Boulevard. The assumed appraised value for the 3307 Chesapeake Boulevard permanent easement for this alternative is $12,729 based on 3,917 sf at a value of $6.50 per sf with a 50% reduction. The assumed appraised value for the 3310 Cromwell Drive permanent easement for this alternative is $9,293 based on 4,200 sf at a value of $4.43 per sf with a 50% reduction. The easement cost for 3310 Cromwell Drive will likely be higher due to a challenging property owner. The current property owner is unwilling to sell an easement for this parcel with the proposed easement encroaching into the limited available, buildable area. Obtaining a permanent easement without the benefit of additional area for construction significantly complicates installation of the railroad crossing by limiting available property for staging and construction. An additional temporary construction easement estimated at $2,213 would be required to install the railroad crossing. Limiting access to just the permanent and temporary easements would result in additional time expenditure to complete the installation. This site is needed in conjunction with the easement for 3307 Chesapeake Boulevard to provide overnight staging for tractor trailer deliveries while the entrance is closed nightly. Additional available parcels for overnight staging of tractor trailers were not found in the immediate area.

Alternative 3 – Realign the Chesapeake Boulevard Section

This alternative continues the alignment down Chesapeake Boulevard and eliminates any private property impacts. This alternative was evaluated and eliminated during the preliminary engineering phase for the following reasons.

1. The single, right, turn lane from Chesapeake Boulevard onto Cromwell Drive would need to be utilized during construction. A temporary turn lane cannot be implemented due to the geometry of the intersection. City of Norfolk Traffic Engineering staff will only allow this alignment if no other options are feasible.
2. Crossing of the railroad right-of-way shall be as close to perpendicular as feasible, but not less than 45 degrees, according to Norfolk Southern's Public Projects Manual. Due to the angle of the Norfolk Southern Railroad and Chesapeake Boulevard crossing, the alignment would require crossing the railroad at approximately 45 degrees. The realignment would require a Norfolk Southern review. Approval for the crossing near 3310 Cromwell drive took 6 months. Review and approval of the new crossing would jeopardize the May 5, 2025, deadline and would not allow for any construction delays

or extended lead times. This crossing would result in considerable impacts to Chesapeake Boulevard, require multiple extended duration late closures, a scenario the City of Norfolk would only consider as a last option.

3. The realignment would result in an additional cost of $813,200 when compared to Alternative 1, purchasing the property. The additional cost exceeds the asking price for the property due to the additional pipe and materials, maintenance of traffic requirements, and construction challenges and would likely increase City review times due to work in Chesapeake Boulevard near the intersection with Cromwell Drive.

Alternative Analysis and Recommendation

The three alternatives were weighted and rated in the matrix presented in Table 1. The rating evaluation reflects assigned selection criteria, importance weightings, and individual ratings for each of the alternatives. Each configuration was given a rating of 1, 2 or 3, where the ratings represent the following:

- Rating of 1 – Alternative option is the least favorable alternative relative to the other options
- Rating of 2 – Alternative option satisfies some criteria requirements or offers a satisfactory benefit relative to the other options.
- Rating of 3 – Alternative option satisfies all criteria requirements or offers the most favorable benefits relative to the other options.

Based on the evaluation, proceeding with Alternative 1, the purchase of 3310 Cromwell Drive, is recommended. Alternative 1 is dependent upon acquiring an easement from 3307 Chesapeake Boulevard. The recommended site would help avoid the long and expensive eminent domain process, avoid extensive traffic impacts to the motoring public, allow the project to maintain the project schedule without a large impact to the overall budget, and provides an area for construction staging.

Table 1. Alignment Criteria Ranking Matrix

Selection Criteria	Criteria Weight	Alternative 1		Alternative 2		Alternative 3		Criteria Description
		Rating	Score	Rating	Score	Rating	Score	
Maintenance of Traffic	2	3	6	3	6	1	2	Impacts to the Traveling Public
Stakeholder Impacts	3	2	6	2	6	1	3	Impacts to Property Owners/Renters
Easement /Property Acquisition Requirements	2	2	4	1	2	3	6	Amount of Property and/or Easements
Utility Conflicts	2	2	4	2	4	1	2	Amount of Conflicts with existing Water, Sewer, Communication, and Electric Infrastructure
Permitting - Norfolk Southern	2	3	6	3	6	1	2	Permitting Required
Permitting - City of Norfolk	2	3	6	3	6	1	2	Permitting Required
Cost	3	2	6	3	9	1	3	Difference in Cost
Schedule	2	3	6	2	4	1	2	Delays/Extension to Schedule
Storage and Staging Area	3	3	9	1	3	1	3	Area Available for Tractor Trailers and the Contractor
Sum		53		46		25		

MEMORANDUM

TO: Karen Scarano, RWP
DATE: March 11, 2022
FROM: Chris Swartz, PE
RE: Price Adjustment Justification
Suffolk Pump Station Replacement Phase 2 (NP010620)

Subject and Purpose

The purpose of this memorandum is to justify a price adjustment in the real estate negotiations for Parcel 11 on the Suffolk Pump Station Replacement Phase 2 (NP010620) project (Project). Parcel 11 is the home of Suffolk Used Auto Parts at 965 Portsmouth Blvd, Suffolk, VA 23434. It is owned and operated by the Tran Family. The business involves acquiring vehicles, often those involved crashes, and piecing out salvaged parts.

The Project will replace an aging sewer that meanders along Shingle Creek through Parcel 11. At the completion of the project, it is HRSD's intention for the City of Suffolk to accept conveyance of this gravity sewer and the associated permanent easement.

Initial Offer and Counteroffer

An independent appraisal was performed to determine a value on the necessary easements for the Project. The appraisal was based on a 30' wide permanent utility easement (13,062 square feet (SF)) and a 20' wide permanent ingress/egress easement (8,393 SF) from the Tran family. The factor for the permanent utility easement was 33% and the permanent ingress/egress easement was 90%. Based on a rate of $2.0087 per SF, the determined value of the easements to be acquired was $23,832 for the two easements.

Through discussions with the property owners, the design team, and the City of Suffolk, the permanent utility easement was reduced to 25' and the permanent ingress/egress easement was converted to a temporary construction easement. Using the same rate and factors as the original appraisal the revised value of the acquisition would be $13,234.

After addressing all concerns as reasonably as possible, the property owners requested the total compensation offer be increased to $30,000 siting all of the additional work involved in moving the hundreds of vehicles (logging and tracking the stock, relocating multiple rows of vehicles).

Property Owner Concerns

From the first interaction, the Trans have been accepting of the project although they have had a few concerns. One concern is the future limitations on use of the property resulting from any new easements. They would prefer to allow the Project to proceed as planned without any compensation in lieu of losing some rights of their property by accepting HRSD's acquisition of easements. While commendable, it would be unfair to the Tran's and not serve the best interest of HRSD as there would be no legal right to utilize the property for infrastructure or access.

Another concern of the property owners was an increase in the number of manholes. The property owners would be able to use the easement areas once construction was completed. However, the manholes would still have to be accessible. These areas would limit the storage area available for their inventory.

The last concern was the impact to the business during construction. The property owners are currently using the areas of the proposed easement. While they would be able to continue to use it after construction, making the easement area available during construction would require support from the Tran's. There are hundreds of vehicles stored within the easement as shown in the figure below.

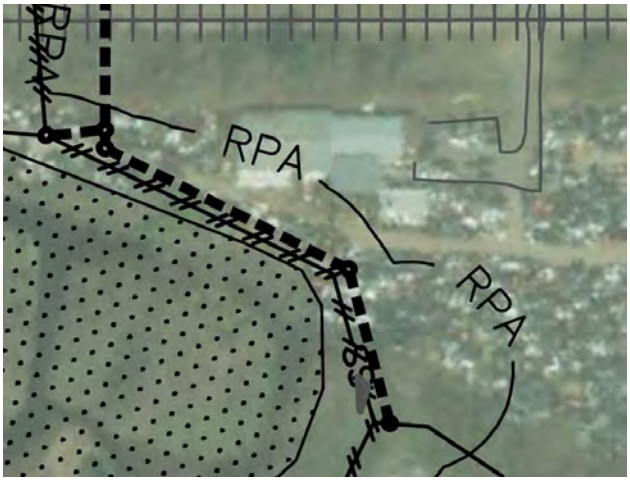

Figure 1: Aerial image of the pipeline from the Construction Drawings.

Figure 2: Aerial Image of lot and cars to move

The effort to label, log, remove, and store the vehicles during construction and return them to the original locations would be an extensive effort (both financially and of time).

Observations

The existing sewer line encumbers the outer edge of the property. The proposed sewer alignment encroaches further into the property. Based on the existing limitations of the proposed easement area, the appraiser placed a utilization factor of only 33% on the property. Justification for this is covered in more detail in the appraisal. However, this is lower than a typical permanent utility easement. For example, the factor used for the permanent ingress/egress easement was 90%. Another appraiser could consider a high percentage resulting in a higher percentage.

During the appraisal, the Tran's mentioned that it be no problem to move the vehicles on their own to accommodate the construction. Therefore, the cost to move cars was not captured within the appraisal, nor does the appraisal factor in the loss of inventory space during construction. Reasonable costs incurred due to the impact of the Project should be reconsidered.

Independent cost estimates for moving and storing the vehicle's during construction cannot reasonably be determined. It would involve bringing in specialized equipment to avoid damaging the vehicles and significant coordination to accommodate an appropriate space. If additional space were not offered by the Tran's, a separate leased area may be required. This is not a standard moving request. The only reasonable accommodation is with the property owners moving the vehicles themselves where they need them as necessary during construction activities.

Recommendation: Price Adjustment

Accepting $30,000 as a counteroffer is reasonable and justified for the reasons described in this memo. There are several factors that justify an accepting the counteroffer. It avoids the use of eminent domain and associated costs, as well as the unknown costs associated with having to relocate the vehicles without the direct efforts from the Tran's.

FINAL

AECOM

Phase I Environmental Site Assessment
Hartman Avenue Pump Station
Onancock, Virginia 23417

Hampton Roads Sanitation District

Project number: 60669159

August 23, 2022

Delivering a better world

Quality information

Prepared by	Checked by	Verified by
Agrima Poudel Environmental Scientist agrima.poudel@aecom.com	Nic Patterson Project Manager Nicholas.patterson@aecom.com	Janet Frey Lead Verifier Janet.frey@aecom.com

Revision History

Revision	Revision date	Details	Authorized	Name	Position
	01/12/2023	Final Report – No revisions	Nic Patterson	Chris Witte	Environmental Scientist

Distribution List

# Hard Copies	PDF Required	Association / Company Name

Prepared for:

Hampton Roads Sanitation District
P.O. Box 5911
Virginia Beach, Virginia 23471-0911

Prepared by:

AECOM
12420 Milestone Center Drive, Suite 150
Germantown, MD 20876
aecom.com

Copyright © 2022 by AECOM

All rights reserved. No part of this copyrighted work may be reproduced, distributed, or transmitted in any form or by any means without the prior written permission of AECOM.

Table of Contents

EXECUTIVE SUMMARY **ES-1**

1. INTRODUCTION 1-1
- 1.1 Purpose 1-1
- 1.2 Detailed Scope-of-Services 1-1
- 1.3 Limitations and Exceptions 1-2
- 1.4 User Reliance 1-3

2. SITE DESCRIPTION 2-1
- 2.1 Location and Legal Description 2-1
- 2.2 Physical Setting 2-1
- 2.3 Site and Vicinity General Characteristics 2-1
- 2.4 Current Site Use 2-2
- 2.5 Descriptions of Structures, Roads, and Other Improvements 2-2
- 2.6 Current Adjoining Property Uses 2-5

3. USER-PROVIDED INFORMATION 3-1
- 3.1 Title Records 3-1
- 3.2 Environmental Liens or Activity and Use Limitations 3-1
- 3.3 Specialized Knowledge 3-1
- 3.4 Valuation Reduction for Environmental Issues 3-1
- 3.5 Owner, Site Manager, and Occupant Information 3-1
- 3.6 Reason for Conducting Phase I ESA 3-1

4. RECORD REVIEW 4-1
- 4.1 Environmental Databases Review 4-1
  - 4.1.1 Subject Property 4-1
  - 4.1.2 Nearby Properties Listed in Environmental Agency Databases 4-1
  - 4.1.3 Other Information 4-2
  - AECOM reviewed the EDR Orphan Sites list, which is a list of sites that have not been geocoded based on a lack of sufficient data regarding their exact location. The review of the Orphan Sites list did not identify any other properties that are likely to have caused a REC at the subject property. 4-2
- 4.2 Regulatory Agency Contact 4-2
- 4.3 Historical Use Information on the Subject Property and Adjacent Properties 4-3

5. SITE RECONNAISSANCE 5-1
- 5.1 Methodology and Limiting Conditions 5-1
- 5.2 General Site Setting 5-1
- 5.3 Interior and Exterior Observations 5-1
  - 5.3.1 Hazardous Substances and Petroleum Products 5-1
  - 5.3.2 Petroleum Storage Tanks 5-1
  - 5.3.3 Odors 5-1
  - 5.3.4 Pools of Liquid 5-1
  - 5.3.5 Drums and Containers 5-2

5.3.6 Unidentified Substance Containers 5-2
5.3.7 PCB-Containing Equipment 5-2
5.3.8 Pits, Ponds, and Lagoons 5-2
5.3.9 Stained or Corroded Surfaces or Soil 5-2
5.3.10 Stressed Vegetation 5-2
5.3.11 Solid Waste 5-2
5.3.12 Drinking Water Supply 5-2
5.3.13 Wastewater and Stormwater 5-2
5.3.14 Wells 5-2
5.3.15 Septic Systems 5-3
5.3.16 Drains and Sumps 5-3
5.3.17 Radon 5-3
5.3.18 Vapor Encroachment Screening 5-3

6. INTERVIEWS 6-1

7. FINDINGS, OPINIONS AND CONCLUSIONS 7-1
7.1 Findings and Opinions 7-1
7.2 Conclusions 7-2

8. REFERENCES 8-1

9. SIGNATURE OF ENVIRONMENTAL PROFESSIONAL 9-1

Figures

Figure 2-1: Site Location Map 2-3
Figure 2-2: Site Plan 2-4

Tables

Table 2-1: Summary of Adjacent Property Use 2-5
Table 4-1: Summary of Environmental Databases 4-1
Table 4-2: Chronological Summary of Historic Land Use 4-3

Appendices

Appendix A Regulatory Database Search Report
Appendix B Regulatory Agency Files
Appendix C Historical Research Documents
Appendix D Site Photographs
Appendix E Qualifications of Environmental Professional

Executive Summary

Hampton Roads Sanitation District (HRSD), a political subdivision of the Commonwealth of Virginia, retained AECOM Technical Services, Inc. (AECOM) to conduct a Phase I Environmental Site Assessment (ESA) of a 0.80-acre portion of a larger property addressed as 12 Hartman Avenue in Onancock, Accomack County, Virginia 23417 (subject property). According to the Accomack County Commissioner of Revenue, the subject property is an approximately 0.80-acre area on the south end of a larger 5.33-acre parcel owned by Eastern Shore Coalition Against Domestic Violence (Parcel Number 085A3A000000600). The remainder of Parcel Number 085A3A000000600 is considered off-site and was not assessed during this ESA.

The northwestern portion of the subject property appears to have been first used as agricultural land by 1959 as part of the adjacent agricultural activities. By 1973, the southern portion of the subject property appears to have been developed with the present-day wastewater pumping station. The remainder of the subject property has remained vacant forested land since 1973.

AECOM conducted a site reconnaissance on June 23, 2022. At the time of the site reconnaissance, the subject property was improved with a sanitary wastewater pump station operated by the HRSD. The subject property is improved with a 6-foot chain link fence surrounding two concrete manways housing belowground pumping system equipment, a pumping system control panel, electrical power meter, and an emergency generator with a diesel fuel belly tank. The diesel belly tank appeared to be in good condition with no evidence of leaks, spill, or releases observed. No evidence (i.e., fill ports or vent lines) of any current underground storage tanks (USTs) was observed or reported during the site reconnaissance.

Based on site observations and review of existing documentation of this assessment, no RECs, HRECs, or CRECs were identified in connection with the subject property.

Based on site observations and review of existing documentation of this assessment, the following *de minimis* condition was identified in connection with the subject property.

- Piles of soil, concrete, asphalt, and sewer pipe storage were observed adjacent to the east of the subject property. The dumping is considered a *de minimis* condition in connection with the subject property.

1. INTRODUCTION

1.1 PURPOSE

Hampton Roads Sanitation District, Inc. (HRSD), a political subdivision of the Commonwealth of Virginia, retained AECOM Technical Services, Inc. (AECOM) to conduct a Phase I Environmental Site Assessment (ESA) of a 0.80-acre portion of a larger property addressed as 12 Hartman Avenue in Onancock, Accomack County, Virginia 23417 (subject property).

The objective of this environmental review is to identify property contamination issues identified through an environmental site assessment conforming to the scope and limitations of *Standard Practice for Environmental Site Assessments: Phase I Environmental Site Assessment Process* (ASTM Standard E1527-13). Environmental concerns or issues are referred to in this report as a "Recognized Environmental Condition" (REC) in accordance with the ASTM Standard E1527-13, which includes EPA's standards for All Appropriate Inquiries (AAI).

A REC is defined as:

> *"The presence or likely presence of any hazardous substances or petroleum products in, on or at a property: (1) due to any release to the environment; (2) under conditions indicative of a release to the environment; or (3) under conditions that pose a material threat of a future release to the environment. De minimis conditions are not recognized environmental conditions."*

A Controlled Recognized Environmental Condition (CREC) is defined as:

> *"A recognized environmental condition resulting from a past release of hazardous substances or petroleum products that has been addressed to the satisfaction of the applicable regulatory authority (for example, as evidenced by the issuance of a no further action letter or equivalent, or meeting risk-based criteria established by regulatory authority), with hazardous substances or petroleum products allowed to remain in place subject to the implementation of required controls (for example, property use restrictions, activity and use limitations, institutional controls, or engineering controls)."* Note: According to the ASTM standard, a CREC is considered a REC.

A Historical Recognized Environmental Condition (HREC) is defined as:

> *"A past release of any hazardous substance or petroleum products that has occurred in connection with the property and has been addressed to the satisfaction of the applicable regulatory authority or meeting unrestricted use criteria established by a regulatory authority, without subjecting the property to any required controls (for example, property use restrictions, activity and use limitations, institutional controls, or engineering controls)."* Note: According to the ASTM standard, the Environmental Professional (EP) must determine if a HREC is a REC at the time of the assessment (for example, if there has been a change in regulatory criteria).

A *de minimis* condition is defined as:

> *"A condition that generally does not present a threat to human health or the environment and that generally would not be the subject of an enforcement action if brought to the attention of appropriate governmental agencies. Conditions determined to be de minimis conditions are not RECs or CRECs."*

1.2 DETAILED SCOPE-OF-SERVICES

AECOM performed the following tasks:

1. Contracted with Environmental Data Resources, Inc. (EDR) to conduct a regulatory database search of known underground storage tank (UST) facilities; landfills; hazardous waste generation, treatment, storage, and disposal facilities (TSDFs); and subsurface contamination

in the surrounding area up to within one mile of the center of the subject property (or subject property boundaries).

2. Conducted inquiries by telephone, online, and/or in writing to the appropriate State and local regulatory agencies for information regarding environmental permits, violations, or incidents, and/or the status of enforcement actions at the subject property.
3. Researched subject property history by (a) reviewing a chronology of aerial photographs, and topographic maps covering the subject property and adjoining properties available from EDR; and (b) reviewing historical city directories for the subject property and nearby properties available from EDR. Sanborn fire insurance maps were not available for the subject property.
4. Conducted site reconnaissance for obvious evidence of potential contamination such as current hazardous materials storage or use; unusually stained soils, slabs, and pavements; drains, sumps, drums, tanks, and electrical transformers; stressed vegetation; and discarded hazardous materials containers.
5. Evaluated the information collected and prepared this report summarizing our findings, opinions, and conclusions.

1.3 LIMITATIONS AND EXCEPTIONS

This report and the associated work have been provided in accordance with the principles and practices generally employed by the local environmental consulting profession. This is in lieu of all warranties, expressed, or implied.

This ESA is not a regulatory compliance audit or an evaluation of the efficiency of the use of any hazardous materials at the subject property.

Unless otherwise specified, the tasks included no collection and analysis of samples. Findings and opinions are based on information available from public sources on specific dates (historical photographs, maps and regulatory agency files, lists, and databases); this information is changing continually and is frequently incomplete. Unless AECOM has actual knowledge to the contrary, information provided to AECOM or obtained from interviews is assumed to be correct and complete. AECOM does not assume any liability for information that has been misrepresented to us or for items not visible, accessible, or present on the subject site during the time of the site reconnaissance.

AECOM cannot warrant or guarantee that not finding indicators of hazardous materials means that hazardous materials do not exist on the subject property. There is no investigation sufficiently adequate to preclude the presence of materials on the subject property, which presently, or in the future, may be considered hazardous. Due to regulatory evaluation criteria constantly changing, concentrations of contaminants that may be present and considered to be acceptable at the time of this report preparation may become subject to different regulatory standards and require remediation in the future.

Where records indicate that prior remedial work or tank removals have occurred, there is the possibility that the work may not have been performed correctly or completely. Opinions and judgments expressed herein are based on AECOM's understanding and interpretation of current regulatory standards, and should not be construed as legal opinions.

As specified in the ASTM standard (referred to below as "this practice"), it is incumbent that the client and any other parties who review and rely upon this report understand the following inherent conditions surrounding any Phase I ESA:

- **Uncertainty Not Eliminated** - No ESA can wholly eliminate uncertainty regarding the potential for REC in connection with a property. Performance of this practice is intended to reduce, but not eliminate, uncertainty regarding the potential for REC in connection with a property, and this practice recognizes reasonable limits of time and costs (Section 4.5.1 of the ASTM standard).
- **Not Exhaustive** - "All appropriate inquiry" does not mean an exhaustive assessment of a clean property. There is a point at which the cost of information obtained outweighs the usefulness of the information and, in fact, may be a material detriment to the orderly completion of transactions. One

of the purposes of this practice is to identify a balance between the competing goals of limiting the costs and time demands inherent in performing an ESA and the reduction of uncertainty about unknown conditions resulting from additional information (Section 4.5.2 of the ASTM Standard).

- **Comparison with Subsequent Inquiry** - ESAs must be evaluated based on the reasonableness of judgments made at the time and under the circumstances in which they were made. Subsequent ESAs should not be considered valid standards to judge the appropriateness of any prior assessment based on hindsight, new information, use of developing technology or analytical techniques, or other factors (Section 4.5.4 of the ASTM Standard).

A similar set of inherent limitations exist in cases where the Phase I ESA included a screening-level assessment of vapor migration or vapor encroachment; such an assessment is a required part of a Phase I ESA when the ASTM E1527-13 standard is employed. According to the ASTM E2600-15 *Standard Guide for Vapor Encroachment Screening on Property Involved in Real Estate Transactions*, the following limitations apply:

- **Uncertainty Not Eliminated in Screening** - No vapor encroachment screen (VES) can wholly eliminate uncertainty regarding the identifications of vapor encroachment conditions (VECs) in connection with the target property (Section 4.5.1).
- **Not Exhaustive** - The guide is not meant to be an exhaustive screening. There is a point at which the cost of information obtained outweighs the usefulness of the information and, in fact, may be a material detriment to the orderly completion of real estate transactions. One of the purposes of this guide is to identify a balance between the competing goals of limiting the costs and time demands inherent in performing a VES and the reduction of uncertainty about unknown conditions resulting from additional information (Section 4.5.2).
- **Comparison with Subsequent Investigations** - It should not be concluded or assumed that an investigation was not adequate because the investigation did not identify any VECs in connection with a property. The VES must be evaluated based on the reasonableness of judgments made at the time and under the circumstances in which they were made. Subsequent VESs should not be considered valid bases to judge the appropriateness of any prior screening if based on hindsight, new information, use of developing technology or analytical techniques, or similar factors (Section 4.5.4).

1.4 USER RELIANCE

This ESA report has been prepared for use solely by HRSD. This report shall not be relied upon by or transferred to any other party, or used for any other purpose, without the express written authorization of AECOM.

2. SITE DESCRIPTION

2.1 LOCATION AND LEGAL DESCRIPTION

The subject property consists of an approximately 0.80-acre portion of a larger 5.33-acre parcel addressed as 12 Hartman Avenue, Accomack County, Virginia. For the purposes of this ESA, the subject property is defined as the 0.80-acre southern portion of Parcel Number 085A3A000000600 (12 Hartman Avenue). The remainder of Parcel Number 085A3A000000600 is considered off-site and was not assessed during this ESA. According to the Accomack County Commissioner of Revenue, the subject property legal description for the subject property is "FARM 4.96 AC" (Accomack County, 2022).

A site location map is provided as **Figure 2-1**.

2.2 PHYSICAL SETTING

According to the United States Geological Survey (USGS) 7.5-Minute Topographic Quadrangle Map Series, *Accomac, VA* (2019), the elevation of the subject property is approximately 17 feet above mean sea level (amsl). The subject property is situated in a flat topographic area that generally slopes down to the west. Surface water on the subject property is expected to flow towards the west towards adjacent wetlands and Central Branch Onancock Creek.

The direction of shallow groundwater is likely to be influenced by nearby surface bodies of water, as well as the general surface topography. Therefore, it can be assumed that shallow groundwater likely flows south towards Central Branch Onancock Creek, located approximately 200 feet south of the subject property. According to information obtained from a water supply well located on the west adjacent property (Virginia Department of Environmental Quality (VA DEQ) well number 100108), groundwater near the subject property is recorded to be approximately 12 feet below ground surface (bgs). Estimated groundwater levels may vary due to seasonal fluctuations in precipitation, local usage demands, geology, underground structures, or nearby dewatering operations.

According to the U.S. Department of Agriculture's (USDA's) Natural Resources Conservation Service (NRCS), *Soil Survey of Accomack County, Virginia,* the predominant soil types identified on the subject property are classified as Polawana mucky sandy loam and Munden sandy loam. Polawana mucky sandy loam consists of mucky sandy loam from 0 to 22 inches bgs and loamy fine sand from 22 to 85 bgs. Munden sandy loam consists of sandy loam from 0 to 7 inches bgs, loam from 7 to 42 inches bgs, and sand from 42 to 59 inches. The Polawana mucky sandy loam is characterized as being very poorly drained. The Munden sandy loam is characterized as being moderately well drained (USDA NRCS, 2022).

The U.S. Fish and Wildlife Service (USFWS) – According to the National Wetlands Inventory (NWI) map (shown in the EDR report; **Appendix A)**, wetlands are mapped on the subject property, as well as the north and south adjacent properties.

Based on a review of the Federal Emergency Management Agency (FEMA) Flood Insurance Rate Map (FIRM) (shown in the EDR Report; **Appendix A**), the subject property and adjacent properties are not located within a 100- or 500-year flood zone.

2.3 SITE AND VICINITY GENERAL CHARACTERISTICS

The subject property operates as a sanitary wastewater pump station for the HRSD. The subject property is improved with a six-foot chain link fence surrounding two concrete manways housing belowground pumping system equipment, a pumping system control panel, electrical power meter, and an emergency generator with a diesel fuel belly AST are also located within the fenced enclosure. Two pad mounted transformers are present on the north side of the chain link fence. The remaining portions of the subject property are forested with a gravel access road present adjacent to the west. In general, the subject property is located in a mixed commercial and residential area.

A general site plan of the subject property is provided as **Figure 2-2**. Surrounding land use is further described in **Section 2.6**.

2.4 CURRENT SITE USE

The subject property consists of an approximately 0.80-acre portion of a larger 5.33-acre commercially developed property. The subject property operates as a sanitary wastewater pump station for the HRSD.

2.5 DESCRIPTIONS OF STRUCTURES, ROADS, AND OTHER IMPROVEMENTS

Structures, roads, and other subject property improvements are described in Section 2.3 above. The Site Plan, **Figure 2-2**, shows the main features of the subject property.

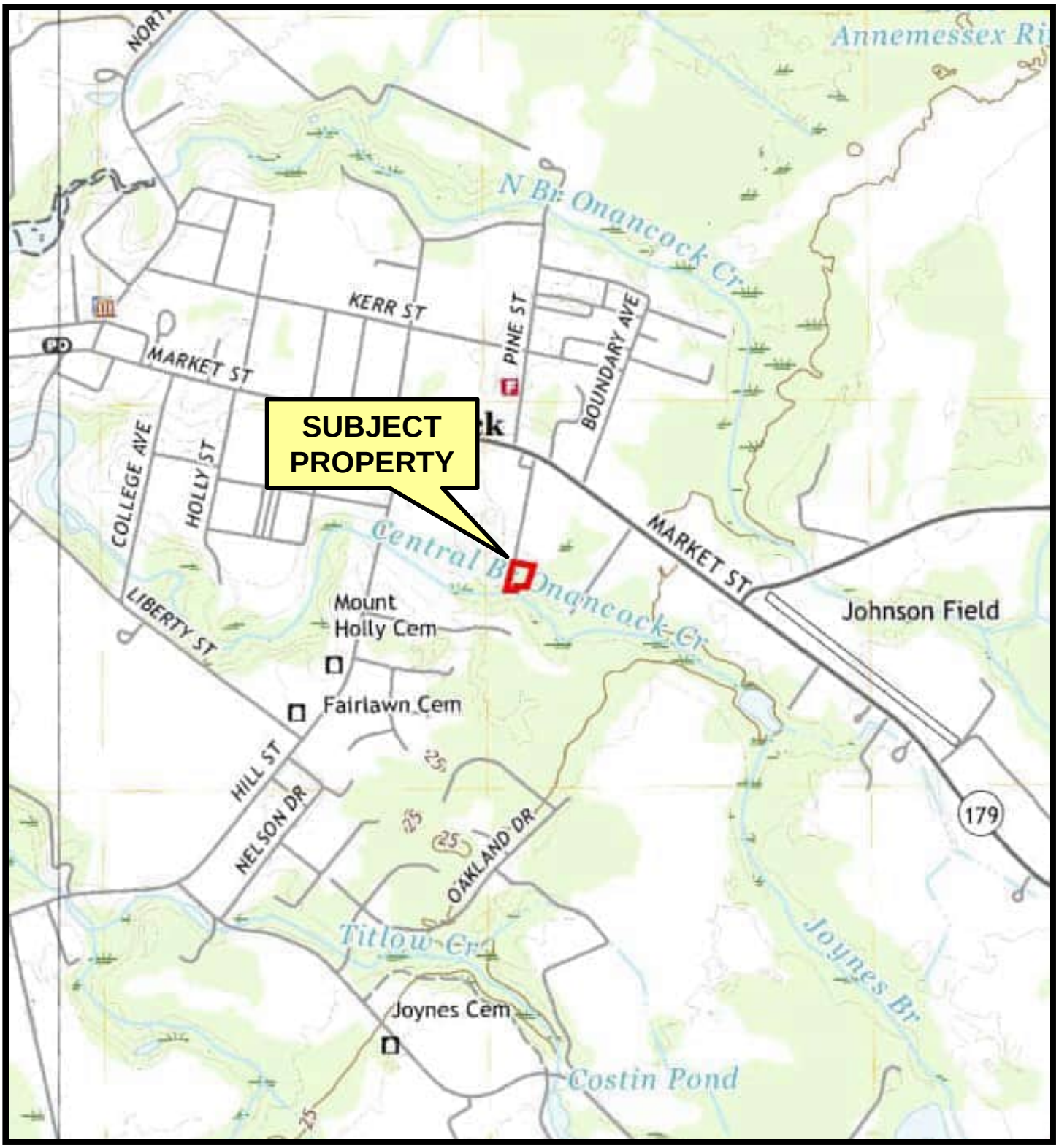

SOURCE: USGS 7.5' Series, Not to Scale
Quad: TP, Accomac, 2019

N
W E
S

FIGURE 2-1
SITE LOCATION MAP
Hartman Ave Pump Station
Onancock, Virginia 23417

Phase I Environmental Site Assessment
AECOM Job No. 60669159

AECOM

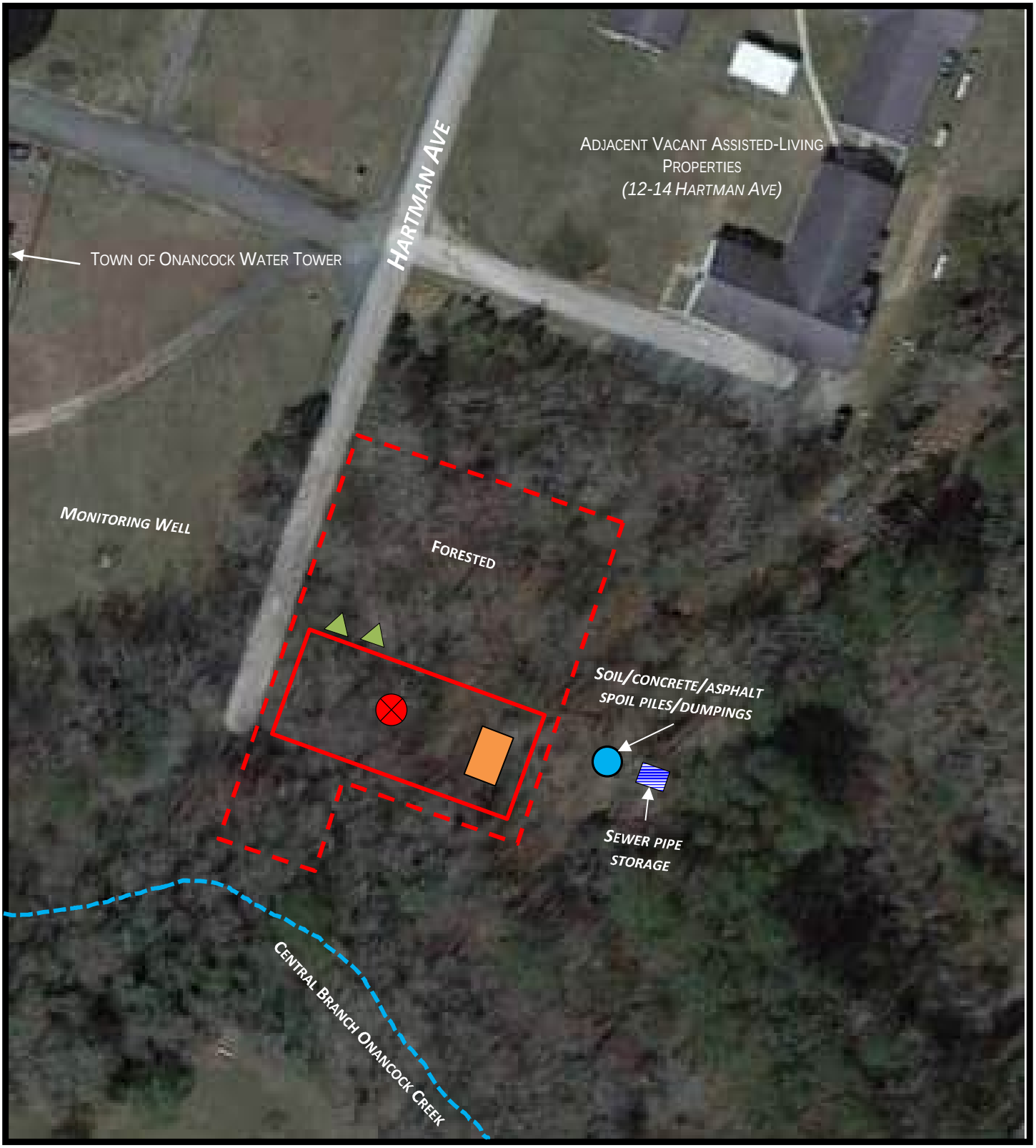

Approximate Subject Property Boundary
Pumping Station Fence Boundary (no access)
Creek
Emergency Generator with an AST Belly Tank
Pumping Station
Pad-Mounted Transformer
Spoil/dump site
Sewer Pipe Storage

Plan Not to Scale

N
W E
S

FIGURE 2-2
SITE PLAN
Hartman Ave Pump Station
Onancock, Virginia 23417

Phase I Environmental Site Assessment
AECOM Job No. 60669159

AECOM

2.6 CURRENT ADJOINING PROPERTY USES

During the site reconnaissance conducted on June 23, 2022, AECOM personnel conducted a walking and drive-by survey of adjoining land uses along accessible roads. **Table 2-1** lists the adjacent businesses and/or property uses. **Figure 2-2** also shows the adjacent properties.

Table 2-1: Summary of Adjacent Property Use

Direction	Adjacent Property Use
North	Forested land followed by vacant assisted-living facility (12 Hartman Avenue), followed by Hartman Avenue, then a Verizon Telephone Central office (150 Market Street) and private residences.
East	Forested land followed by private residences.
South	Forested land and Central Branch Onancock Creek followed by private residences.
Northwest	Town of Onancock water tower followed by Central Accomack little League Sports Complex (10 Hartman Avenue).

3. USER-PROVIDED INFORMATION

3.1 TITLE RECORDS

A chain-of-title or title commitment report was not provided to AECOM for review and obtaining a title search was not part of AECOM's scope. The history of the subject property was established through a review of historical documents (i.e., aerial photographs, historical topographic maps, and city directories); therefore, this data gap is not expected to impact the results of this assessment.

3.2 ENVIRONMENTAL LIENS OR ACTIVITY AND USE LIMITATIONS

An environmental lien search was not part of AECOM's scope. Environmental agency databases as provided by EDR show no indication of deed restrictions or activity and use limitations due to a release of hazardous materials; therefore, this data gap is not expected to impact the results of this assessment.

3.3 SPECIALIZED KNOWLEDGE

HRSD did not provide any specialized knowledge, experience related to the subject property, or information that would assist AECOM in identifying environmental concerns related to the subject property. Additionally, a completed user questionnaire was not provided to AECOM during this investigation. However, the history of the subject property was established through a review of historical documents (i.e., aerial photographs, historical topographic maps, and city directories) and Environmental agency databases as provided by EDR show no indication of deed restrictions or activity and use limitations due to a release of hazardous materials; therefore, this data gap is not expected to impact the results of this assessment.

3.4 VALUATION REDUCTION FOR ENVIRONMENTAL ISSUES

HRSD representatives provided no information that the property value has been reduced due to environmental issues.

3.5 OWNER, SITE MANAGER, AND OCCUPANT INFORMATION

According to the Accomack County Commissioner of Revenue, the subject property is owned by Eastern Shore Coalition Against Domestic Violence (identified as "Eastern Shore Coalition Against Dome"). At the time of AECOM's site reconnaissance on June 23, 2022, the subject property operated as a pumping station for the HRSD and is part of a larger parcel improved with a vacant assisted-living facility and addressed as 12 Hartman Avenue.

3.6 REASON FOR CONDUCTING PHASE I ESA

The Phase I ESA is being conducted for HRSD for the purpose of determining potential environmental liability associated with the subject property. This Phase I ESA is intended to satisfy one of the requirements to qualify for the innocent landowner, contiguous property owner, or bona fide prospective purchaser limitations on Comprehensive Environmental Response, Compensation, and Liability Act (CERCLA) liability.

4. RECORD REVIEW

4.1 ENVIRONMENTAL DATABASES REVIEW

AECOM reviewed the Federal, State, and local database list search provided by EDR (**Appendix A**) to evaluate whether activities on or near the subject property have the potential to cause a REC on the subject property. It should be noted that this information is reported as AECOM received it from EDR, which in turn reports information as it is provided in various government databases. It is not possible for either AECOM or EDR to verify the accuracy or completeness of information contained in these databases. However, the use of and reliance on this information is a generally accepted practice in the conduct of environmental due diligence.

Databases where properties were identified within the search radius of the target property (TP) (i.e., the subject property) are summarized below in **Table 4-1** and discussed in further detail after the table. The complete list of databases reviewed is provided in the EDR report, which is included in **Appendix A**.

Table 4-1: Summary of Environmental Databases

Type of Database	Description of Database	Search Radius	Number of Identified Sites
State ASTM Standard			
LUST	Leaking Underground Storage Tank (LUST) sites.	0.5 mile	**7**
LTANKS	Leaking underground and aboveground petroleum tanks.	0.5 mile	**9**
UST	Underground Storage Tank (UST) sites.	0.25 mile	**6**
AST	Aboveground Storage Tank (AST) sites.	0.25 mile	**1**
Additional Databases			
RCRA NonGen/NLR	Sires no longer generating hazardous waste.	0.25 mile	**1**

4.1.1 Subject Property

The subject property address was not identified in any reviewed environmental database.

4.1.2 Nearby Properties Listed in Environmental Agency Databases

AECOM reviewed the EDR database report to identify other offsite facilities that have suspected or documented environmental concerns or RECs that may negatively affect the subject property. AECOM's criteria for further evaluating the potential impact of a listed offsite facility are summarized below:

- The listed offsite facility is adjacent to the subject property, or the listed offsite facility is documented or assumed to be hydrogeologically upgradient and a likely pathway exists for environmentally mobile contaminants to reach the subject property, or contaminants from the listed offsite facility can reach the subject through other pathways (e.g., surface runoff); and
- The offsite facility is listed on one of the databases of the Federal National Priority List (NPL), Federal RCRA Corrective Action Report (CORRACTS), Federal Superfund Enterprise Management System (SEMS), Federal Emergency Response Notification System (ERNS), Local

Priority Listing (LPL), Local SEMS Listing, LUST, Local Deed Restrictions, Landfill (excluding transfer stations) and is not listed in the database as “closed” or “no further action” (including no further remedial action planned [NFRAP]); or

- The facility adjoins the subject property and is listed as a RCRA Large Quantity Generator (LQG), a Superfund Enterprise Management System Archive (SEMS-ARCHIVE) site, or a UST operator; or
- The facility is a known or suspected concern based on AECOM’s experience or observations made during the site reconnaissance (e.g., dry-cleaning operations that may or may not be listed as RCRA Small Quantity Generator (SQG) or a non-adjacent UST site that appears to have a remediation system in place).

Based on the anticipated direction of groundwater flow in the subject property vicinity to the south, the properties situated to the north are potentially positioned hydrogeologically upgradient and were evaluated to determine their potential impact to the subject property. Based on the criteria outlined above, AECOM’s review of the offsite facilities listed in the environmental databases identified the following sites requiring evaluation:

- *Bell Atlantic 150 West market Street* (150 West Market Street) located approximately 500 feet north and hydrogeologically upgradient to the subject property is identified in the LUST, LTANKS, UST, AST, RCRA/Non-Gen, Finds and ECHO databases. The site is also identified as *Chesapeake and Potomac Telephone CO* and *Verizon-Onancock CO*. A 2,000-gallon UST containing diesel fuel originally installed in 1969 was reportedly closed in the ground. The facility currently operates a 1,000-gallon AST containing diesel fuel. The case is reported as closed in 2001. The facility is identified in the LTANKS and LUST databases for a reported release in July 1992, which resulted in total petroleum hydrocarbon (TPH) impacted soils noted in concentrations greater than 1,000 parts per million (PPM). The case was closed in 1994. Due to the closed regulatory status, and the fact that impacts were reportedly limited to onsite soils, this site is not expected to present an environmental concern to the subject property.

According to the environmental database report, eight additional sites were identified on the LTANKS and/or LUST databases. Based on AECOM’s review of these database listings, none of these sites are expected to present an environmental concern to the subject property based on their distance from the subject property, media impacted (i.e. soil only), and/or regulatory status (i.e. closed, no violations found).

4.1.3 Other Information

AECOM reviewed the EDR Orphan Sites list, which is a list of sites that have not been geocoded based on a lack of sufficient data regarding their exact location. The review of the Orphan Sites list did not identify any other properties that are likely to have caused a REC at the subject property.

4.2 REGULATORY AGENCY CONTACT

During the performance of an environmental assessment, state and local regulatory agencies having jurisdiction over the subject property may be contacted to evaluate the following information: the status of relevant environmental permits; whether there has been any violations, or other similar correspondence from such agencies; whether any corrective action or remediation is planned, currently taking place, or has been completed at the subject property; whether there have been any reported violations or complaints that the subject property is not in compliance with environmental laws, regulations, or standards, and whether the subject property is under investigation for such non-compliance; whether the subject property is listed on any of the regulatory databases; and whether there is any other pertinent documentation on file with such regulatory agencies regarding the subject property or surrounding sites of concern.

AECOM submitted Freedom of Information Act (FOIA) requests to and/or searched online databases of the government agencies listed below to obtain information regarding evidence of contamination, environmental permits, violations, or corrective actions at the subject property.

Virginia Department of Environmental Quality – On June 21, 2022, AECOM submitted a records request to VA DEQ. A response was received on June 21, 2022, from the VA DEQ indicating no records were identified pertinent to the request.

Virginia Department of Health – On June 21, 2022, AECOM submitted a records request to Virginia Department of Health (VDH). At the time this report was prepared, a response had not been received from the Department. If a response is received that will alter the conclusions of this report, the client will be notified under a separate cover.

Accomack County– On June 21, 2022, AECOM submitted a records request to Northampton County. At the time this report was prepared, a response was received on June 24, 2022, indicating no records had been found responsive to the request.

Town of Onancock Town Manager – On July 7, 2022, AECOM submitted a records request to the Town of Onancock Town Manager. A response was received from Matt Spuck, Town Manager, on July 8, 2022, indicating that a pumping station has been in place on the subject property for over 15 years with no environmental issues, fines, or leaks. Mr. Spuck stated that the system is being rebuilt, and once construction is complete the pump station will be decommissioned.

4.3 HISTORICAL USE INFORMATION ON THE SUBJECT PROPERTY AND ADJACENT PROPERTIES

AECOM contacted EDR to obtain available historical documents, including historic aerial photographs, historic topographic maps, and city directories. **Table 4-2** below summarizes the historical subject property use as interpreted from the aerial photographs, topographic maps, city directories, and Sanborn Fire Insurance Maps. Copies of the historical research documents are included in **Appendix C**.

Table 4-2: Chronological Summary of Historic Land Use

Date	Location	Finding	Source
1931 - 1959	Subject Property	The subject property appears to be primarily undeveloped forested land. The northern portion of the subject property appears to be developed agriculturally as part of the north and west adjacent properties.	Aerial Photographs 1959 Topographic Maps 1931, 1935, 1957
	Adjacent Properties	Adjacent properties to the north, east south and west appear to be developed as agricultural land with a forested riparian area surrounding Central Branch Onancock Creek adjacent to the south and east.	
1968 - 1985	Subject Property	The majority of the subject property is primarily undeveloped forested land. By 1978, the southernmost portion of the subject property appears to have been cleared in the area of the present-day pump station.	Aerial Photographs 1973, 1978 Google Earth Historical Images 1985 Topographic Maps 1968, 1979

	Adjacent Properties	Private residences appear to be constructed south of central Branch Onancock Creek and further east of the subject property by 1973. By 1985, the north adjacent property appears to have been improved with two of the present day vacant assisted-living facility structures. All other adjacent properties appear to be relatively unchanged.	
1990 - 1995	Subject Property	The subject property appears to be relatively unchanged.	Aerial Photographs 1990, 1994, 1995 Google Earth Historical Images 1994
	Adjacent Properties	The adjacent properties appear to be relatively unchanged.	
2000 - 2007	Subject Property	The subject property appears to be relatively unchanged.	Aerial Photographs 2000, 2006 Google Earth Historical Images 2005, 2006, 2007
	Adjacent Properties	The adjacent property to the north has been developed with an additional structure. All other adjacent properties appear to be relatively unchanged.	
2008 - 2013	Subject Property	The subject property appears to be relatively unchanged.	Aerial Photographs 2009, 2012 Google Earth Historical Images 2008, 2011, 2013 Topographic Maps 2013
	Adjacent Properties	The Town of Onancock Water Tower and baseball fields appear to have been constructed by 2009. All other adjacent properties appear to be relatively unchanged.	
2016 - 2022	Subject Property	The southernmost portion of the subject property appears to have been cleared. The purpose of the cleared area cannot be determined from the aerial photograph. The remainder of the subject property appears to be undeveloped forested land.	Aerial Photographs 2016 Google Earth Historical Images 2022 Topographic Maps 2016, 2019
	Adjacent Properties	The adjacent properties appear to be relatively unchanged.	

ASTM E1527-13 standards for Phase I ESAs require that historical land use be identified to the property's first developed use (including agricultural) or back to 1940, whichever is earlier, using reasonably ascertainable sources. Based on the review of historical information dating back to 1931 and the Accomack County AccoMap Online Mapping Service, the northwestern portion of the subject property appears to have been first developed as agricultural land by 1959. By 1973, the southern portion of the subject property

appears to have been developed with the present-day wastewater pumping station. The remainder of the subject property has remained vacant forested since 1973. The adjacent properties appear to be first developed as agricultural land. Areas east and south of the subject property were redeveloped as private residences in the early 1970's. The north adjacent property was also first developed agriculturally before being redeveloped with the present day vacant assisted living facility circa 1985. By 2009, the west adjacent property was developed with the present-day Town of Onancock Water Tower and athletic fields.

Data gaps exceeding intervals of five years exist due to the limited availability of historical documents; however, it is AECOM's opinion that these gaps do not inhibit AECOM's ability to reach an opinion regarding the historical environmental condition of the subject property.

5. SITE RECONNAISSANCE

5.1 METHODOLOGY AND LIMITING CONDITIONS

AECOM conducted a reconnaissance of the subject property on June 23, 2022, to evaluate current site use and identify potential sources of hazardous substances on- and off-site (on adjacent properties). AECOM site investigator, Mr. Justin Derato was unaccompanied during the site reconnaissance. Select photographs taken during the site reconnaissance are presented in **Appendix D**.

AECOM conducted the site reconnaissance by visually observing the subject property. The periphery of the subject property was observed by walking and driving, and was viewed from adjacent roads. Some limiting conditions were encountered during the site reconnaissance. The pumping station located on the southern portion of the subject property is surrounded by a locked chain-link fence. Mr. Derato was unable to access the fence, and the pumping station was only observed from outside of the fence. Additionally, the remainder of the subject property is heavily vegetated forested land obscuring the ground surface. However, it is AECOM's opinion that these gaps do not inhibit AECOM's ability to reach an opinion regarding the historical environmental condition of the subject property.

5.2 GENERAL SITE SETTING

As previously referenced, the subject property consists of an approximately 0.80-acre portion of a larger parcel. Surrounding land uses primarily include commercial and residential developments.

Electric services at the subject property are provided by A&N Electric Cooperative. Wastewater infrastructure at the subject property is managed by HRSD. There are no water or gas utility services at the subject property, however water service in the surrounding area is reportedly provided by Accomack County.

5.3 INTERIOR AND EXTERIOR OBSERVATIONS

5.3.1 Hazardous Substances and Petroleum Products

One AST containing diesel fuel was observed within the fenced pump station enclosure. The diesel AST is further discussed in Section 5.3.2. No other hazardous substances or petroleum products were observed on the subject property at the time of the site reconnaissance.

5.3.2 Petroleum Storage Tanks

An emergency generator with a belly AST containing diesel was observed within the pump station fenced enclosure. The pump station enclosure was not accessible at the time of the site reconnaissance; therefore, the size of the generator and the diesel AST could not be determined. The emergency generator and AST are situated on a concrete pad. Rust staining was observed on the concrete pad likely from the peeling paint observed on the generator housing. However, the AST appeared to be in relatively good condition and no evidence of leaks, spills or releases was observed.

No evidence of underground storage tanks (USTs) was observed or reported at the subject property.

5.3.3 Odors

AECOM noted a strong sanitary sewer odor in the area of the pump station at the time of the site reconnaissance which is not uncommon for wastewater infrastructure. No other unusual or strong odors were noted or encounter at the subject property at the time of the site reconnaissance.

5.3.4 Pools of Liquid

AECOM did not observe or encounter any pools of liquid at the subject property at the time of the site reconnaissance.

5.3.5 Drums and Containers

Information regarding drums and containers containing hazardous materials or petroleum products is discussed in **Sections 5.3.1** and **5.3.2**.

5.3.6 Unidentified Substance Containers

AECOM did not observe any unidentified substance containers at the subject property at the time of the site reconnaissance.

5.3.7 PCB-Containing Equipment

Two pad-mounted transformers were observed on the subject property on the north side of the pump station fence. The transformers are likely owned and maintained by A&N Electric Cooperative (the electric utility provider), who would be responsible for maintenance and addressing any releases. No evidence of spills or releases was observed in the vicinity of the transformers. The transformers lacked labels; therefore, the PCB content of the transformers were unable to be determined.

5.3.8 Pits, Ponds, and Lagoons

No pits, ponds or lagoons were observed on the subject property at the time of the site reconnaissance.

5.3.9 Stained or Corroded Surfaces or Soil

Rust staining was observed on the concrete pad beneath the emergency generator within the fenced pump station. AECOM did not observe any other stained or corroded surfaces or soil on the subject property at the time of the site reconnaissance.

5.3.10 Stressed Vegetation

No evidence of stressed vegetation was observed on the subject property at the time of the site reconnaissance.

5.3.11 Solid Waste

No solid waste is generated on the subject property. Solid waste in the surrounding area is managed by the Accomack County Public Works. Waste concrete, asphalt, and sewer pipes was observed on the property adjacent to the east of the subject property. The concrete and asphalt piles and stored sewer pipes appear to be excess material stored on the adjacent site. No evidence of hazardous substances or petroleum products was observed within or near the excess materials.

5.3.12 Drinking Water Supply

Drinking water in the vicinity of the subject property is provided by Accomack County.

5.3.13 Wastewater and Stormwater

No wastewater is generated on the subject property. The subject property is developed with a wastewater pump station managed by HRSD. Wastewater in the surrounding area is managed by the HRSD.

Stormwater on the subject property is expected to infiltrate into the ground or sheet flow offsite to the south and west.

5.3.14 Wells

No wells were observed or reported to exist on the subject property at the time of the site reconnaissance. Two water supply wells (Well No. 7 and Well No. 9) were observed on the west adjacent property and are owned by the City of Onancock. According to the well identification tag observed on Well No. 7 (DEQ well

number 1001018) the 8-inch well was drilled to a depth of 220 feet bgs and has a static water level of 12 feet bgs.

5.3.15 Septic Systems

No septic systems were observed or reported to exist on the subject property at the time of the site reconnaissance.

5.3.16 Drains and Sumps

Two manways are present within on the subject property associated with the wastewater pump station managed by HRSD. No other drains or sumps were observed on the subject property at the time of the site reconnaissance.

5.3.17 Radon

Based on AECOM's review of published information available from the EPA Radon Program, the subject property county (Northampton County) is in a Radon Zone 3 designated area. Radon Zone 3 areas are described as areas that have predicted indoor radon screening levels that are less than 2 picoCuries per liter (pCi/L). The EPA action level for radon is 4 pCi/L. Of the 2 sites tested in the subject property zip code (23413), both sites reported radon levels less than 4 pCi/L. Based on the absence of any occupied structures on the subject property, radon accumulation is not expected to represent a concern to the subject property at this time.

5.3.18 Vapor Encroachment Screening

AECOM conducted a Tier 1 vapor encroachment screening (VES) as part of this assessment in general accordance with the ASTM E2600-15 *Standard Guide for Vapor Encroachment Screening on Property Involved in Real Estate Transactions*. The objective of the VES was to evaluate whether a VEC exists on the subject property.

AECOM reviewed the site-specific environmental database report with particular focus on the following two types of sites:

1. Properties that are impacted by chlorinated volatile organic compounds (VOCs) and/or semi-volatile-organic compounds (SVOCs) and are located within approximately 1,750 feet of the subject property, and
2. Properties that are impacted by petroleum hydrocarbons and are located within approximately 525 feet of the subject property.

A review of the site-specific environmental database indicates that no VOC, SVOC, or petroleum hydrocarbon-impacted sites are located within the above-described radii.

A VEC at the subject property can be ruled out.

6. INTERVIEWS

Per ASTM, past owners, operators, and occupants of the subject property who are likely to have material information regarding the potential for contamination at the subject property shall be contacted to the extent that they can be identified and that the information likely to be obtained is not duplicative of information already obtained from other sources. AECOM was unable to interview past owners and/or operators at the subject property.

Data gaps exist due to the failure to interview past or present owners, operators, or occupants of the subject property; however, it is AECOM's opinion that these gaps do not inhibit AECOM's ability to reach an opinion regarding the historical environmental condition of the subject property.

7. FINDINGS, OPINIONS AND CONCLUSIONS

7.1 FINDINGS AND OPINIONS

The findings regarding site listings, site conditions, and potential environmental concerns identified during this ESA at the subject property are summarized as follows:

- The subject property consists of the approximately 0.80-acre southern portion of a larger 5.33-acre parcel addressed as 12 Hartman Avenue, Accomack County, Virginia. For the purposes of this ESA, the subject property is defined as the 0.80-acre southern portion of Parcel Number 085A3A000000600 (12 Hartman Avenue). The remainder of Parcel Number 085A3A000000600 is considered off-site and was not assessed during this ESA.
- The northwestern portion of the subject property appears to have been first used as agricultural land by 1959 as part of the adjacent agricultural activities. By 1973, the southern portion of the subject property appears to have been developed with the present-day wastewater pumping station. The remainder of the subject property has remained vacant forested land since 1973. The subject property currently operates as a sanitary wastewater pump station for the HRSD.
- Based on the historical use of the northern portion of the subject property as agricultural land from as early as 1950's until at least 1973, residual concentrations of pesticides (e.g., organo-chlorine pesticides (OCPs)) may have been present in shallow soils on the subject property, as this is common throughout many agricultural regions. Any residual contaminants from historical pesticide and/or herbicide use would likely have naturally attenuated since the 1970s. Therefore, the possible historic application of pesticides and/or herbicides does not present an environmental concern to the subject property at this time.
- AECOM was unable to interview past owners and/or operators at the subject property and a completed user questionnaire was not provided to AECOM during this investigation. However, the history of the subject property was established through a review of historical documents (i.e., aerial photographs, historical topographic maps, and city directories) and Environmental agency databases as provided by EDR show no indication of deed restrictions or activity and use limitations due to a release of hazardous materials; therefore, this data gap is not expected to impact the results of this assessment.
- An emergency generator with a diesel belly tank was observed within the locked perimeter fence surrounding the pump station. The pump station enclosure was not accessible at the time of the site reconnaissance; therefore, the size of the generator and the diesel AST could not be determined, however AECOM was able to visually assess the emergency generator and AST from the fence perimeter. Rust staining was observed on the concrete pad beneath the generator and is likely from the peeling paint observed on the generator housing. The diesel AST (belly tank) appeared to be in relatively good condition and no evidence of leaks, spills or releases was observed.
- Two pad-mounted transformers were observed in the center of the subject property. The possible PCB content of the transformers was unable to be determined. The transformers appeared to be in good condition and no evidence of leaks, spills, or releases was observed.
- Piles of soil, concrete, asphalt, and stored sewer pipe were observed adjacent to the east of the subject property. The presence of these materials is considered a *de minimis* condition in connection with the subject property
- According to the environmental database report, 11 sites were identified within their respective ASTM E1527-13 and/or EDR search distances from the subject property. Based on AECOM's review of these database listings, none of these sites are expected to present an environmental concern to the subject property based on their distance from the subject property, media impacted (i.e. soil only), regulatory status (i.e. closed, no violations found), and/or topographical position from the subject property (i.e. down-gradient or cross-gradient).

7.2 CONCLUSIONS

AECOM has performed a Phase I ESA in conformance with the scope and limitations of ASTM Practice E1527-13 of the 0.80-acre portion of the property addressed as 12 Hartman Avenue, Onancock, Virginia. Any exceptions to, or deletions from, this practice are described in **Section 1.3** of this report.

Based on site observations and review of existing documentation of this assessment, no RECs, HRECs, or CRECs were identified in relation to the subject property.

The following *de minimis* conditions were identified in relation to the subject property.

- Piles of soil, concrete, asphalt, and sewer pipe were observed stored adjacent to the east of the subject property. The dumping is considered a *de minimis* condition in connection with the subject property.

8. REFERENCES

ASTM International. *Standard Practice for Environmental Site Assessments: Phase I Environmental Site Assessment Process*, Standard E1527-13, 2021.

ASTM International. *Standard Guide for Vapor Encroachment Screening on Property Involved in Real Estate Transactions*, Standard E2600-15, 2015.

Accomack County, 2022. *AccoMap Online Mapping Service*, July 8, 2022. https://parcelviewer.geodecisions.com/Accomack/Account/Logon

Environmental Data Resources, Inc., 2022. *The EDR Aerial Photo Decade Package, Hartman Ave, Onancock, VA,* Inquiry Number: 7025287.8, June 22, 2022.

Environmental Data Resources, Inc., 2022. *The EDR-City Directory Abstract, 9424 T-681, Hartman Ave, Onancock, VA,* Inquiry Number: 7025287.5, June 23, 2022.

Environmental Data Resources, Inc., 2022. *The EDR Historical Topographic Map Report, Hartman Ave, Onancock, VA,* Inquiry Number: 7025287.4, June 21, 2022.

Environmental Data Resources, Inc., 2022. *The EDR Radius Map™ Report with GeoCheck®, Hartman Ave, Onancock, VA,* Inquiry Number: 7025287.2s, June 21, 2022.

Environmental Data Resources, Inc., 2022. *Certified Sanborn® Map Report, Hartman Ave, Onancock, VA 23417,* Inquiry Number: 7025287.3, June 21, 2022.

U.S. Department of Agriculture's (USDA) Natural Resources Conservation Service (NRCS), *Soil Survey of Accomack County, Virginia.*

9. SIGNATURE OF ENVIRONMENTAL PROFESSIONAL

This section includes qualification statements of the EP responsible for conducting the ESA and preparing this report.

The site reconnaissance was conducted by Mr. Justin Derato in AECOM's Germantown, Maryland office. The research and report preparation were conducted by Ms. Agrima Poudel in AECOM's Germantown, Maryland office.

Mr. Nic Patterson, in AECOM's Germantown, Maryland office, was the primary EP for this project. Mr. Patterson's EP statement is below, and his resume is provided in **Appendix E**:

I declare that, to the best of my professional knowledge and belief, I meet the definition of Environmental Professional as defined in §312.10 of 40 CFR 312. I have the specific qualifications based on education, training, and experience to assess a property of the nature, history, and setting of the subject property. I have developed and performed all appropriate inquiries in conformance with the standards and practices set forth in 40 CFR Part 312.

Signature:

Date: August 23, 2022

Appendix A

Regulatory Database Search Report

Hartman Ave Pump Station
Hartman Ave
Onancock, VA 23417

Inquiry Number: 7025287.2s
June 21, 2022

The EDR Radius Map™ Report with GeoCheck®

6 Armstrong Road, 4th floor
Shelton, CT 06484
Toll Free: 800.352.0050
www.edrnet.com

TABLE OF CONTENTS

SECTION	PAGE
Executive Summary	ES1
Overview Map	2
Detail Map	3
Map Findings Summary	4
Map Findings	8
Orphan Summary	60
Government Records Searched/Data Currency Tracking	GR-1

GEOCHECK ADDENDUM

Physical Setting Source Addendum	A-1
Physical Setting Source Summary	A-2
Physical Setting SSURGO Soil Map	A-5
Physical Setting Source Map	A-12
Physical Setting Source Map Findings	A-14
Physical Setting Source Records Searched	PSGR-1

Thank you for your business.
Please contact EDR at 1-800-352-0050
with any questions or comments.

Disclaimer - Copyright and Trademark Notice

This Report contains certain information obtained from a variety of public and other sources reasonably available to Environmental Data Resources, Inc. It cannot be concluded from this Report that coverage information for the target and surrounding properties does not exist from other sources. **NO WARRANTY EXPRESSED OR IMPLIED, IS MADE WHATSOEVER IN CONNECTION WITH THIS REPORT. ENVIRONMENTAL DATA RESOURCES, INC. SPECIFICALLY DISCLAIMS THE MAKING OF ANY SUCH WARRANTIES, INCLUDING WITHOUT LIMITATION, MERCHANTABILITY OR FITNESS FOR A PARTICULAR USE OR PURPOSE. ALL RISK IS ASSUMED BY THE USER. IN NO EVENT SHALL ENVIRONMENTAL DATA RESOURCES, INC. BE LIABLE TO ANYONE, WHETHER ARISING OUT OF ERRORS OR OMISSIONS, NEGLIGENCE, ACCIDENT OR ANY OTHER CAUSE, FOR ANY LOSS OF DAMAGE, INCLUDING, WITHOUT LIMITATION, SPECIAL, INCIDENTAL, CONSEQUENTIAL, OR EXEMPLARY DAMAGES. ANY LIABILITY ON THE PART OF ENVIRONMENTAL DATA RESOURCES, INC. IS STRICTLY LIMITED TO A REFUND OF THE AMOUNT PAID FOR THIS REPORT.** Purchaser accepts this Report "AS IS". Any analyses, estimates, ratings, environmental risk levels or risk codes provided in this Report are provided for illustrative purposes only, and are not intended to provide, nor should they be interpreted as providing any facts regarding, or prediction or forecast of, any environmental risk for any property. Only a Phase I Environmental Site Assessment performed by an environmental professional can provide information regarding the environmental risk for any property. Additionally, the information provided in this Report is not to be construed as legal advice.

Copyright 2020 by Environmental Data Resources, Inc. All rights reserved. Reproduction in any media or format, in whole or in part, of any report or map of Environmental Data Resources, Inc., or its affiliates, is prohibited without prior written permission.

EDR and its logos (including Sanborn and Sanborn Map) are trademarks of Environmental Data Resources, Inc. or its affiliates. All other trademarks used herein are the property of their respective owners.

EXECUTIVE SUMMARY

A search of available environmental records was conducted by Environmental Data Resources, Inc (EDR). The report was designed to assist parties seeking to meet the search requirements of EPA's Standards and Practices for All Appropriate Inquiries (40 CFR Part 312), the ASTM Standard Practice for Environmental Site Assessments (E1527-21), the ASTM Standard Practice for Environmental Site Assessments for Forestland or Rural Property (E 2247-16), the ASTM Standard Practice for Limited Environmental Due Diligence: Transaction Screen Process (E 1528-14) or custom requirements developed for the evaluation of environmental risk associated with a parcel of real estate.

TARGET PROPERTY INFORMATION

ADDRESS

HARTMAN AVE
ONANCOCK, VA 23417

COORDINATES

Latitude (North):	37.7069220 - 37ˆ 42' 24.91''
Longitude (West):	75.7363370 - 75ˆ 44' 10.81''
Universal Tranverse Mercator:	Zone 18
UTM X (Meters):	435093.1
UTM Y (Meters):	4173348.2
Elevation:	17 ft. above sea level

USGS TOPOGRAPHIC MAP ASSOCIATED WITH TARGET PROPERTY

Target Property Map:	13861795 ACCOMAC, VA
Version Date:	2019
West Map:	13861833 PUNGOTEAGUE, VA
Version Date:	2019

AERIAL PHOTOGRAPHY IN THIS REPORT

Portions of Photo from:	20140927
Source:	USDA

MAPPED SITES SUMMARY

Target Property Address:
HARTMAN AVE
ONANCOCK, VA 23417

Click on Map ID to see full detail.

MAP ID	SITE NAME	ADDRESS	DATABASE ACRONYMS	RELATIVE ELEVATION	DIST (ft. & mi.) DIRECTION
A1	VERIZON-ONANCOCK CO	150 WEST MARKET STRE	UST, AST	Higher	732, 0.139, NNE
A2	CHESAPEAKE & POTOMAC	150 MARKET ST	RCRA NonGen / NLR, FINDS, ECHO	Higher	732, 0.139, NNE
A3	BELL ATLANTIC 150 WE	150 WEST MARKET STRE	LUST, LTANKS	Higher	732, 0.139, NNE
B4	ONANCOCK CHEVRON	146 MARKET ST	LUST, LTANKS, UST	Higher	792, 0.150, NNE
5	ED BLAKES BP	175 MARKET STREET	LUST, LTANKS, UST	Higher	896, 0.170, ENE
B6	CROCKETT REALTY	155 MARKET STREET	LUST, LTANKS, UST	Higher	983, 0.186, North
7	DONALD BELOTE	132 MARKET ST	UST	Higher	996, 0.189, NNW
C8	PROSPECT CORP LLC PR	116 MARKET ST	LTANKS	Higher	1298, 0.246, NW
C9	E&C ENTERPRISES INC	114 MARKET ST	UST, Financial Assurance	Higher	1309, 0.248, NW
C10	ONANCOCK CORNER MART	114 MARKET ST	LUST, LTANKS	Higher	1309, 0.248, NW
D11	BELL ATLANTIC	KERR & PINE STREET	LUST, LTANKS, UST	Higher	1775, 0.336, North
D12	DMA - ONANCOCK ARMOR	67 KERR ST	LUST, LTANKS, TIER 2	Higher	1869, 0.354, North
13	JER RENTALS LLC RESI	58 KERR ST	LTANKS	Higher	2164, 0.410, NNW

EXECUTIVE SUMMARY

TARGET PROPERTY SEARCH RESULTS

The target property was not listed in any of the databases searched by EDR.

DATABASES WITH NO MAPPED SITES

No mapped sites were found in EDR's search of available ("reasonably ascertainable ") government records either on the target property or within the search radius around the target property for the following databases:

STANDARD ENVIRONMENTAL RECORDS

Lists of Federal NPL (Superfund) sites

NPL ..... National Priority List
Proposed NPL ..... Proposed National Priority List Sites
NPL LIENS ..... Federal Superfund Liens

Lists of Federal Delisted NPL sites

Delisted NPL ..... National Priority List Deletions

Lists of Federal sites subject to CERCLA removals and CERCLA orders

FEDERAL FACILITY ..... Federal Facility Site Information listing
SEMS ..... Superfund Enterprise Management System

Lists of Federal CERCLA sites with NFRAP

SEMS-ARCHIVE ..... Superfund Enterprise Management System Archive

Lists of Federal RCRA facilities undergoing Corrective Action

CORRACTS ..... Corrective Action Report

Lists of Federal RCRA TSD facilities

RCRA-TSDF ..... RCRA - Treatment, Storage and Disposal

Lists of Federal RCRA generators

RCRA-LQG ..... RCRA - Large Quantity Generators
RCRA-SQG ..... RCRA - Small Quantity Generators
RCRA-VSQG ..... RCRA - Very Small Quantity Generators (Formerly Conditionally Exempt Small Quantity Generators)

Federal institutional controls / engineering controls registries

LUCIS ..... Land Use Control Information System

EXECUTIVE SUMMARY

US ENG CONTROLS..... Engineering Controls Sites List
US INST CONTROLS..... Institutional Controls Sites List

Federal ERNS list

ERNS..... Emergency Response Notification System

Lists of state- and tribal hazardous waste facilities

SHWS..... This state does not maintain a SHWS list. See the Federal CERCLIS list and Federal NPL list.

Lists of state and tribal landfills and solid waste disposal facilities

SWF/LF..... Solid Waste Management Facilities

Lists of state and tribal leaking storage tanks

INDIAN LUST..... Leaking Underground Storage Tanks on Indian Land

Lists of state and tribal registered storage tanks

FEMA UST..... Underground Storage Tank Listing
INDIAN UST..... Underground Storage Tanks on Indian Land

State and tribal institutional control / engineering control registries

ENG CONTROLS..... Engineering Controls Sites Listing
INST CONTROL..... Voluntary Remediation Program Database

Lists of state and tribal voluntary cleanup sites

VCP..... Voluntary Remediation Program
INDIAN VCP..... Voluntary Cleanup Priority Listing

Lists of state and tribal brownfield sites

BROWNFIELDS..... Brownfields Site Specific Assessments

ADDITIONAL ENVIRONMENTAL RECORDS

Local Brownfield lists

US BROWNFIELDS..... A Listing of Brownfields Sites

Local Lists of Landfill / Solid Waste Disposal Sites

INDIAN ODI..... Report on the Status of Open Dumps on Indian Lands
ODI..... Open Dump Inventory
DEBRIS REGION 9..... Torres Martinez Reservation Illegal Dump Site Locations
IHS OPEN DUMPS..... Open Dumps on Indian Land

Local Lists of Hazardous waste / Contaminated Sites

US HIST CDL..... Delisted National Clandestine Laboratory Register

US CDL ..... National Clandestine Laboratory Register

Local Land Records

LIENS 2 ..... CERCLA Lien Information

Records of Emergency Release Reports

HMIRS ..... Hazardous Materials Information Reporting System
SPILLS ..... Prep/Spills Database Listing
SPILLS 90 ..... SPILLS 90 data from FirstSearch

Other Ascertainable Records

FUDS ..... Formerly Used Defense Sites
DOD ..... Department of Defense Sites
SCRD DRYCLEANERS ..... State Coalition for Remediation of Drycleaners Listing
US FIN ASSUR ..... Financial Assurance Information
EPA WATCH LIST ..... EPA WATCH LIST
2020 COR ACTION ..... 2020 Corrective Action Program List
TSCA ..... Toxic Substances Control Act
TRIS ..... Toxic Chemical Release Inventory System
SSTS ..... Section 7 Tracking Systems
ROD ..... Records Of Decision
RMP ..... Risk Management Plans
RAATS ..... RCRA Administrative Action Tracking System
PRP ..... Potentially Responsible Parties
PADS ..... PCB Activity Database System
ICIS ..... Integrated Compliance Information System
FTTS ..... FIFRA/ TSCA Tracking System - FIFRA (Federal Insecticide, Fungicide, & Rodenticide Act)/TSCA (Toxic Substances Control Act)
MLTS ..... Material Licensing Tracking System
COAL ASH DOE ..... Steam-Electric Plant Operation Data
COAL ASH EPA ..... Coal Combustion Residues Surface Impoundments List
PCB TRANSFORMER ..... PCB Transformer Registration Database
RADINFO ..... Radiation Information Database
HIST FTTS ..... FIFRA/TSCA Tracking System Administrative Case Listing
DOT OPS ..... Incident and Accident Data
CONSENT ..... Superfund (CERCLA) Consent Decrees
INDIAN RESERV ..... Indian Reservations
FUSRAP ..... Formerly Utilized Sites Remedial Action Program
UMTRA ..... Uranium Mill Tailings Sites
LEAD SMELTERS ..... Lead Smelter Sites
US AIRS ..... Aerometric Information Retrieval System Facility Subsystem
US MINES ..... Mines Master Index File
ABANDONED MINES ..... Abandoned Mines
FINDS ..... Facility Index System/Facility Registry System
DOCKET HWC ..... Hazardous Waste Compliance Docket Listing
ECHO ..... Enforcement & Compliance History Information
UXO ..... Unexploded Ordnance Sites
FUELS PROGRAM ..... EPA Fuels Program Registered Listing
AIRS ..... Permitted Airs Facility List
NPDES ..... Comprehensive Environmental Data System
COAL ASH ..... Coal Ash Disposal Sites
DRYCLEANERS ..... Drycleaner List

EXECUTIVE SUMMARY

ENF..... Enforcement Actions Data
Financial Assurance..... Financial Assurance Information Listing
TIER 2..... Tier 2 Information Listing
UIC..... Underground Injection Control Wells
MINES MRDS..... Mineral Resources Data System

EDR HIGH RISK HISTORICAL RECORDS

EDR Exclusive Records

EDR MGP..... EDR Proprietary Manufactured Gas Plants
EDR Hist Auto..... EDR Exclusive Historical Auto Stations
EDR Hist Cleaner..... EDR Exclusive Historical Cleaners

EDR RECOVERED GOVERNMENT ARCHIVES

Exclusive Recovered Govt. Archives

RGA LF..... Recovered Government Archive Solid Waste Facilities List
RGA LUST..... Recovered Government Archive Leaking Underground Storage Tank

SURROUNDING SITES: SEARCH RESULTS

Surrounding sites were identified in the following databases.

Elevations have been determined from the USGS Digital Elevation Model and should be evaluated on a relative (not an absolute) basis. Relative elevation information between sites of close proximity should be field verified. Sites with an elevation equal to or higher than the target property have been differentiated below from sites with an elevation lower than the target property.
Page numbers and map identification numbers refer to the EDR Radius Map report where detailed data on individual sites can be reviewed.

Sites listed in ***bold italics*** are in multiple databases.

Unmappable (orphan) sites are not considered in the foregoing analysis.

STANDARD ENVIRONMENTAL RECORDS

Lists of state and tribal leaking storage tanks

LUST: The Leaking Underground Storage Tank Database.

A review of the LUST list, as provided by EDR, has revealed that there are 7 LUST sites within approximately 0.5 miles of the target property.

Equal/Higher Elevation	Address	Direction / Distance	Map ID	Page
BELL ATLANTIC 150 WE	***150 WEST MARKET STRE***	***NNE 1/8 - 1/4 (0.139 mi.)***	***A3***	***14***
Database: LUST REG TD, Date of Government Version: 06/30/2013 Facility Status: Closed Facility ID: 200000064149 Pollution Complaint Num: 19930070				
ONANCOCK CHEVRON	***146 MARKET ST***	***NNE 1/8 - 1/4 (0.150 mi.)***	***B4***	***15***
Database: LUST REG TD, Date of Government Version: 06/30/2013				

Facility Status: Closed
Facility ID: 200000066438
Pollution Complaint Num: 20085104

ED BLAKES BP ***175 MARKET STREET*** ***ENE 1/8 - 1/4 (0.170 mi.)*** ***5*** ***25***
Database: LUST REG TD, Date of Government Version: 06/30/2013
Facility Status: Closed
Facility ID: 200000090988
Pollution Complaint Num: 19952368

CROCKETT REALTY ***155 MARKET STREET*** ***N 1/8 - 1/4 (0.186 mi.)*** ***B6*** ***37***
Database: LUST REG TD, Date of Government Version: 06/30/2013
Facility Status: Closed
Facility ID: 200000064721
Pollution Complaint Num: 19972268

ONANCOCK CORNER MART ***114 MARKET ST*** ***NW 1/8 - 1/4 (0.248 mi.)*** ***C10*** ***54***
Database: LUST REG TD, Date of Government Version: 06/30/2013
Facility Status: Closed
Facility ID: 200000066439
Pollution Complaint Num: 20075003

BELL ATLANTIC ***KERR & PINE STREET*** ***N 1/4 - 1/2 (0.336 mi.)*** ***D11*** ***55***
Database: LUST REG TD, Date of Government Version: 06/30/2013
Facility Status: Closed
Facility ID: 200000064150
Pollution Complaint Num: 19930132

DMA - ONANCOCK ARMOR ***67 KERR ST*** ***N 1/4 - 1/2 (0.354 mi.)*** ***D12*** ***57***
Database: LUST REG TD, Date of Government Version: 06/30/2013
Facility Status: Closed
Facility ID: 200000223137
Pollution Complaint Num: 20115001

LTANKS: The Leaking Tanks Database contains current Leaking petroleum tanks. The data comes from the Department of Environmental Quality.

A review of the LTANKS list, as provided by EDR, and dated 02/03/2022 has revealed that there are 9 LTANKS sites within approximately 0.5 miles of the target property.

Equal/Higher Elevation	Address	Direction / Distance	Map ID	Page
BELL ATLANTIC 150 WE	***150 WEST MARKET STRE***	***NNE 1/8 - 1/4 (0.139 mi.)***	***A3***	***14***
Facility Status: Closed CEDS Facility Id: 200000064149 Pollution Complaint #: 19930070				
ONANCOCK CHEVRON	***146 MARKET ST***	***NNE 1/8 - 1/4 (0.150 mi.)***	***B4***	***15***
Facility Status: Closed CEDS Facility Id: 200000066438 Pollution Complaint #: 20085104				
ED BLAKES BP	***175 MARKET STREET***	***ENE 1/8 - 1/4 (0.170 mi.)***	***5***	***25***
Facility Status: Closed CEDS Facility Id: 200000090988 Pollution Complaint #: 19952368				
CROCKETT REALTY	***155 MARKET STREET***	***N 1/8 - 1/4 (0.186 mi.)***	***B6***	***37***
Facility Status: Closed				

CEDS Facility Id: 200000064721 Pollution Complaint #: 19972268				
PROSPECT CORP LLC PR Facility Status: Closed CEDS Facility Id: 200000884442 Pollution Complaint #: 20175207	116 MARKET ST	NW 1/8 - 1/4 (0.246 mi.)	C8	42
ONANCOCK CORNER MART Facility Status: Closed CEDS Facility Id: 200000066439 Pollution Complaint #: 20075003	***114 MARKET ST***	***NW 1/8 - 1/4 (0.248 mi.)***	***C10***	***54***
BELL ATLANTIC Facility Status: Closed CEDS Facility Id: 200000064150 Pollution Complaint #: 19930132	***KERR & PINE STREET***	***N 1/4 - 1/2 (0.336 mi.)***	***D11***	***55***
DMA - ONANCOCK ARMOR Facility Status: Closed CEDS Facility Id: 200000223137 Pollution Complaint #: 20115001	***67 KERR ST***	***N 1/4 - 1/2 (0.354 mi.)***	***D12***	***57***
JER RENTALS LLC RESI Facility Status: Closed CEDS Facility Id: 200000882676 Pollution Complaint #: 20165234	58 KERR ST	NNW 1/4 - 1/2 (0.410 mi.)	13	59

Lists of state and tribal registered storage tanks

UST: The Underground Storage Tank database contains registered USTs. USTs are regulated under Subtitle I of the Resource Conservation and Recovery Act (RCRA). The data come from the Department of Environmental Quality's Underground Storage Tank Data Notification Information.

A review of the UST list, as provided by EDR, and dated 02/02/2022 has revealed that there are 6 UST sites within approximately 0.25 miles of the target property.

Equal/Higher Elevation	Address	Direction / Distance	Map ID	Page
VERIZON-ONANCOCK CO Tank Status: CLS IN GRD Facility Id: 5005369 CEDS Facility ID: 200000064149	***150 WEST MARKET STRE***	***NNE 1/8 - 1/4 (0.139 mi.)***	***A1***	***8***
ONANCOCK CHEVRON Tank Status: REM FROM GRD Facility Id: 5011073 CEDS Facility ID: 200000066438	***146 MARKET ST***	***NNE 1/8 - 1/4 (0.150 mi.)***	***B4***	***15***
ED BLAKES BP Tank Status: REM FROM GRD Facility Id: 5011072 CEDS Facility ID: 200000090988	***175 MARKET STREET***	***ENE 1/8 - 1/4 (0.170 mi.)***	***5***	***25***
CROCKETT REALTY Tank Status: REM FROM GRD Facility Id: 5027871 CEDS Facility ID: 200000064721	***155 MARKET STREET***	***N 1/8 - 1/4 (0.186 mi.)***	***B6***	***37***
DONALD BELOTE	132 MARKET ST	NNW 1/8 - 1/4 (0.189 mi.)	7	40

Tank Status: PERM OUT OF USE
Facility Id: 5009619
CEDS Facility ID: 200000090957

E&C ENTERPRISES INC	***114 MARKET ST***	***NW 1/8 - 1/4 (0.248 mi.)***	***C9***	***43***

Tank Status: REM FROM GRD
Tank Status: CURR IN USE
Facility Id: 5009606
CEDS Facility ID: 200000066439

AST: The Aboveground Storage Tank database contains registered ASTs. The data come from the Department of Environmental Quality's Aboveground Storage Tank Data Notification Information.

A review of the AST list, as provided by EDR, and dated 02/02/2022 has revealed that there is 1 AST site within approximately 0.25 miles of the target property.

Equal/Higher Elevation	Address	Direction / Distance	Map ID	Page
VERIZON-ONANCOCK CO	***150 WEST MARKET STRE***	***NNE 1/8 - 1/4 (0.139 mi.)***	***A1***	***8***

Facility ID: 5005369
CEDS Facility ID: 200000064149

ADDITIONAL ENVIRONMENTAL RECORDS

Other Ascertainable Records

RCRA NonGen / NLR: RCRAInfo is EPA's comprehensive information system, providing access to data supporting the Resource Conservation and Recovery Act (RCRA) of 1976 and the Hazardous and Solid Waste Amendments (HSWA) of 1984. The database includes selective information on sites which generate, transport, store, treat and/or dispose of hazardous waste as defined by the Resource Conservation and Recovery Act (RCRA). Non-Generators do not presently generate hazardous waste.

A review of the RCRA NonGen / NLR list, as provided by EDR, and dated 02/28/2022 has revealed that there is 1 RCRA NonGen / NLR site within approximately 0.25 miles of the target property.

Equal/Higher Elevation	Address	Direction / Distance	Map ID	Page
CHESAPEAKE & POTOMAC	***150 MARKET ST***	***NNE 1/8 - 1/4 (0.139 mi.)***	***A2***	***11***

EPA ID:: VAD980719447

EXECUTIVE SUMMARY

There were no unmapped sites in this report.

OVERVIEW MAP - 7025287.2S

Target Property

Sites at elevations higher than or equal to the target property

Sites at elevations lower than the target property

Manufactured Gas Plants

National Priority List Sites

Dept. Defense Sites

0 1/4 1/2 1 Miles

Indian Reservations BIA

Special Flood Hazard Area (1%)

0.2% Annual Chance Flood Hazard

National Wetland Inventory

This report includes Interactive Map Layers to display and/or hide map information. The legend includes only those icons for the default map view.

SITE NAME: Hartman Ave Pump Station ADDRESS: Hartman Ave Onancock VA 23417 LAT/LONG: 37.706922 / 75.736337	CLIENT: AECOM CONTACT: Justin Derato INQUIRY #: 7025287.2s DATE: June 21, 2022 11:10 am

Copyright © 2022 EDR, Inc. © 2015 TomTom Rel. 2015.

DETAIL MAP - 7025287.2S

Target Property

Sites at elevations higher than or equal to the target property

Sites at elevations lower than the target property

Manufactured Gas Plants

Sensitive Receptors

National Priority List Sites

Dept. Defense Sites

0 1/16 1/8 1/4 Miles

Indian Reservations BIA

Special Flood Hazard Area (1%)

0.2% Annual Chance Flood Hazard

National Wetland Inventory

This report includes Interactive Map Layers to display and/or hide map information. The legend includes only those icons for the default map view.

SITE NAME: Hartman Ave Pump Station ADDRESS: Hartman Ave Onancock VA 23417 LAT/LONG: 37.706922 / 75.736337	CLIENT: AECOM CONTACT: Justin Derato INQUIRY #: 7025287.2s DATE: June 21, 2022 11:13 am

Copyright © 2022 EDR, Inc. © 2015 TomTom Rel. 2015.

MAP FINDINGS SUMMARY

Database	Search Distance (Miles)	Target Property	< 1/8	1/8 - 1/4	1/4 - 1/2	1/2 - 1	> 1	Total Plotted
STANDARD ENVIRONMENTAL RECORDS								
Lists of Federal NPL (Superfund) sites								
NPL	1.000		0	0	0	0	NR	0
Proposed NPL	1.000		0	0	0	0	NR	0
NPL LIENS	1.000		0	0	0	0	NR	0
Lists of Federal Delisted NPL sites								
Delisted NPL	1.000		0	0	0	0	NR	0
Lists of Federal sites subject to CERCLA removals and CERCLA orders								
FEDERAL FACILITY	0.500		0	0	0	NR	NR	0
SEMS	0.500		0	0	0	NR	NR	0
Lists of Federal CERCLA sites with NFRAP								
SEMS-ARCHIVE	0.500		0	0	0	NR	NR	0
Lists of Federal RCRA facilities undergoing Corrective Action								
CORRACTS	1.000		0	0	0	0	NR	0
Lists of Federal RCRA TSD facilities								
RCRA-TSDF	0.500		0	0	0	NR	NR	0
Lists of Federal RCRA generators								
RCRA-LQG	0.250		0	0	NR	NR	NR	0
RCRA-SQG	0.250		0	0	NR	NR	NR	0
RCRA-VSQG	0.250		0	0	NR	NR	NR	0
Federal institutional controls / engineering controls registries								
LUCIS	0.500		0	0	0	NR	NR	0
US ENG CONTROLS	0.500		0	0	0	NR	NR	0
US INST CONTROLS	0.500		0	0	0	NR	NR	0
Federal ERNS list								
ERNS	TP		NR	NR	NR	NR	NR	0
Lists of state- and tribal hazardous waste facilities								
SHWS	N/A		N/A	N/A	N/A	N/A	N/A	N/A
Lists of state and tribal landfills and solid waste disposal facilities								
SWF/LF	0.500		0	0	0	NR	NR	0
Lists of state and tribal leaking storage tanks								
LUST	0.500		0	5	2	NR	NR	7

MAP FINDINGS SUMMARY

Database	Search Distance (Miles)	Target Property	< 1/8	1/8 - 1/4	1/4 - 1/2	1/2 - 1	> 1	Total Plotted
INDIAN LUST	0.500		0	0	0	NR	NR	0
LTANKS	0.500		0	6	3	NR	NR	9
Lists of state and tribal registered storage tanks								
FEMA UST	0.250		0	0	NR	NR	NR	0
UST	0.250		0	6	NR	NR	NR	6
AST	0.250		0	1	NR	NR	NR	1
INDIAN UST	0.250		0	0	NR	NR	NR	0
State and tribal institutional control / engineering control registries								
ENG CONTROLS	0.500		0	0	0	NR	NR	0
INST CONTROL	0.500		0	0	0	NR	NR	0
Lists of state and tribal voluntary cleanup sites								
VCP	0.500		0	0	0	NR	NR	0
INDIAN VCP	0.500		0	0	0	NR	NR	0
Lists of state and tribal brownfield sites								
BROWNFIELDS	0.500		0	0	0	NR	NR	0
ADDITIONAL ENVIRONMENTAL RECORDS								
Local Brownfield lists								
US BROWNFIELDS	0.500		0	0	0	NR	NR	0
Local Lists of Landfill / Solid Waste Disposal Sites								
INDIAN ODI	0.500		0	0	0	NR	NR	0
ODI	0.500		0	0	0	NR	NR	0
DEBRIS REGION 9	0.500		0	0	0	NR	NR	0
IHS OPEN DUMPS	0.500		0	0	0	NR	NR	0
Local Lists of Hazardous waste / Contaminated Sites								
US HIST CDL	TP		NR	NR	NR	NR	NR	0
US CDL	TP		NR	NR	NR	NR	NR	0
Local Land Records								
LIENS 2	TP		NR	NR	NR	NR	NR	0
Records of Emergency Release Reports								
HMIRS	TP		NR	NR	NR	NR	NR	0
SPILLS	TP		NR	NR	NR	NR	NR	0
SPILLS 90	TP		NR	NR	NR	NR	NR	0
Other Ascertainable Records								
RCRA NonGen / NLR	0.250		0	1	NR	NR	NR	1
FUDS	1.000		0	0	0	0	NR	0
DOD	1.000		0	0	0	0	NR	0

MAP FINDINGS SUMMARY

Database	Search Distance (Miles)	Target Property	< 1/8	1/8 - 1/4	1/4 - 1/2	1/2 - 1	> 1	Total Plotted
SCRD DRYCLEANERS	0.500		0	0	0	NR	NR	0
US FIN ASSUR	TP		NR	NR	NR	NR	NR	0
EPA WATCH LIST	TP		NR	NR	NR	NR	NR	0
2020 COR ACTION	0.250		0	0	NR	NR	NR	0
TSCA	TP		NR	NR	NR	NR	NR	0
TRIS	TP		NR	NR	NR	NR	NR	0
SSTS	TP		NR	NR	NR	NR	NR	0
ROD	1.000		0	0	0	0	NR	0
RMP	TP		NR	NR	NR	NR	NR	0
RAATS	TP		NR	NR	NR	NR	NR	0
PRP	TP		NR	NR	NR	NR	NR	0
PADS	TP		NR	NR	NR	NR	NR	0
ICIS	TP		NR	NR	NR	NR	NR	0
FTTS	TP		NR	NR	NR	NR	NR	0
MLTS	TP		NR	NR	NR	NR	NR	0
COAL ASH DOE	TP		NR	NR	NR	NR	NR	0
COAL ASH EPA	0.500		0	0	0	NR	NR	0
PCB TRANSFORMER	TP		NR	NR	NR	NR	NR	0
RADINFO	TP		NR	NR	NR	NR	NR	0
HIST FTTS	TP		NR	NR	NR	NR	NR	0
DOT OPS	TP		NR	NR	NR	NR	NR	0
CONSENT	1.000		0	0	0	0	NR	0
INDIAN RESERV	1.000		0	0	0	0	NR	0
FUSRAP	1.000		0	0	0	0	NR	0
UMTRA	0.500		0	0	0	NR	NR	0
LEAD SMELTERS	TP		NR	NR	NR	NR	NR	0
US AIRS	TP		NR	NR	NR	NR	NR	0
US MINES	0.250		0	0	NR	NR	NR	0
ABANDONED MINES	0.250		0	0	NR	NR	NR	0
FINDS	TP		NR	NR	NR	NR	NR	0
DOCKET HWC	TP		NR	NR	NR	NR	NR	0
ECHO	TP		NR	NR	NR	NR	NR	0
UXO	1.000		0	0	0	0	NR	0
FUELS PROGRAM	0.250		0	0	NR	NR	NR	0
AIRS	TP		NR	NR	NR	NR	NR	0
NPDES	TP		NR	NR	NR	NR	NR	0
COAL ASH	0.500		0	0	0	NR	NR	0
DRYCLEANERS	0.250		0	0	NR	NR	NR	0
ENF	TP		NR	NR	NR	NR	NR	0
Financial Assurance	TP		NR	NR	NR	NR	NR	0
TIER 2	TP		NR	NR	NR	NR	NR	0
UIC	TP		NR	NR	NR	NR	NR	0
MINES MRDS	TP		NR	NR	NR	NR	NR	0

EDR HIGH RISK HISTORICAL RECORDS

EDR Exclusive Records

EDR MGP	1.000		0	0	0	0	NR	0
EDR Hist Auto	0.125		0	NR	NR	NR	NR	0
EDR Hist Cleaner	0.125		0	NR	NR	NR	NR	0

MAP FINDINGS SUMMARY

Database	Search Distance (Miles)	Target Property	< 1/8	1/8 - 1/4	1/4 - 1/2	1/2 - 1	> 1	Total Plotted
EDR RECOVERED GOVERNMENT ARCHIVES								
Exclusive Recovered Govt. Archives								
RGA LF	TP		NR	NR	NR	NR	NR	0
RGA LUST	TP		NR	NR	NR	NR	NR	0
- Totals --		0	0	19	5	0	0	24

NOTES:

TP = Target Property

NR = Not Requested at this Search Distance

Sites may be listed in more than one database

N/A = This State does not maintain a SHWS list. See the Federal CERCLIS list.

A1 NNE 1/8-1/4 0.139 mi. 732 ft. | **VERIZON-ONANCOCK CO**
150 WEST MARKET STREET
ONANCOCK, VA 23417 | **UST** | **U003689751**
AST | **N/A**

Site 1 of 3 in cluster A

Relative: Higher

Actual: 20 ft.

Facility:

Name:	VERIZON-ONANCOCK CO
Address:	150 WEST MARKET STREET
City,State,Zip:	ONANCOCK, VA 23417
Facility Id:	5005369
Facility Type:	UTILITY
CEDS Facility ID:	200000064149

Owner:

Owner Id:	31843
Owner Name:	Verizon Virginia LLC
Owner Address:	400 International Parkway
Owner Address2:	Not reported
Owner City, State, Zip:	Richardson, TX 75081
Owner Type:	COMMERCIAL
Number of Active AST:	1
Number of Active UST:	0
Number of Inactive AST:	0
Number of Inactive UST:	1

UST:

Facility ID:	5005369
Federally Regulated:	Yes
Tank Number:	G1
Tank Capacity:	2000
Tank Contents:	DIESEL
Tank Status:	**CLS IN GRD**
Tank Type:	UST

Tank Material:

Install Date:	3/19/1969
Tank Materials: Bare Steel	Yes
Tank Materials: Cath Protect Steel	No
Tank Materials: Epoxy Steel	No
Tank Materials: Fiberglass	No
Tank Materials: Concrete	No
Tank Materials: Composite	No
Tank Materials: Double Walled	No
Tank Materials: Lined Interior	No
Tank Materials: Excav Liner	No
Tank Materials: Insulated Tank Jacket	No
Tank Materials: Repaired	No
Tank Materials: Unknown	No
Tank Materials: Other	No
Tank Materials: Other Note	Not reported

Release Detection:

Tank Release Detection: Leak Deferred	No
Tank Release Detection: Manual Gauge	No
Tank Release Detection: Auto Gauge	No
Tank Release Detection:Tank Tightness	No
Tank Release Detection: Vapor Monitor	No

VERIZON-ONANCOCK CO (Continued) **U003689751**

Tank Release Detection: Inventory	No
Tank Release Detection: Stat Invent Recon	No
Tank Release Detection: Spill Install	No
Tank Release Detection: Overfill Install	No
Tank Release Detection: Groundwater	No
Tank Release Detection: Int Sec Containment	No
Tank Release Detection: Int Double Walled	No
Tank Release Detection: Other Method	No
Tank Release Detection: Other Note	Not reported
Pipe Release Detection: Leak Deferred	Not reported
Pipe Release Detection: Autoleak	Not reported
Pipe Release Detection: Line Tightness	No
Pipe Release Detection: Stat Invent Recon	No
Pipe Release Detection: Groundwater	No
Pipe Release Detection: Int Sec Containment	No
Pipe Release Det: Interior Double Walled	No
Pipe Release Detection: Other Method	No
Pipe Release Detection: Other Note	Not reported
Pipe Type:	UNKNOWN
Pipe Materials: Bare Steel	No
Pipe Materials: Galvanized Steel	No
Pipe Materials: Copper	No
Pipe Materials: Fiberglass	No
Pipe Materials: Cath Protect	No
Pipe Materials: Double Walled	No
Pipe Materials: Sec Containment	No
Pipe Materials: Repaired	No
Pipe Materials: Unknown	No
Pipe Materials: Other	Yes
Pipe Materials: Other Note	COPPER

AST:

Facility ID:	5005369
Facility Type:	UTILITY
CEDS Facility ID:	200000064149

Tank Info:

Owner:

Owner Id:	31843
Owner Name:	Verizon Virginia LLC
Owner Address:	400 International Parkway
Owner Address2:	Not reported
Owner City/State/Zip:	Richardson, TX 75081
Owner Type:	COMMERCIAL
Number of Active AST:	1
Number of Active UST:	0
Number of Inactive AST:	0
Number of Inactive UST:	1
Fed Regulated:	No
Tank Number:	1
Tank Type:	AST
Tank Capacity:	1000
Tank Contents:	DIESEL
Tank Status:	CURR IN USE

VERIZON-ONANCOCK CO (Continued) **U003689751**

Install Date:	7/13/1992
Date Closed:	Not reported

Tank Containment:

Install Date:	7/13/1992
Containment: Curbing	No
Containment: Weirs	No
Containment: Sorbent	No
Containment: Culvert	No
Containment: Diversion	No
Containment: Retention	No
Containment: Dike	No
Containment: Unknown	No
Containment: Other	Yes
Containment: Other Note	Double-walled

Release Detection:

Release Detection: Ground Water	No
Release Detection: Visual	Yes
Release Detection: Vapor	No
Release Detection: Interstitial	No
Release Detection: None	No
Release Detection: Other	No
Release Detection: Other Note	Not reported
Release Prevention: Double Bottom	No
Release Prevention: Double Walled	Yes
Release Prevention: Lined Interior	Not reported
Release Prevention: Poly Jacket	No
Release Prevention: Exc Liner	No
Release Prevention: None	No
Release Prevention: Unknown	No
Release Prevention: Other	No
Release Prevention: Other Note	Not reported

Tank Foundation: Steel	No
Tank Foundation: Earthen	No
Tank Foundation: Concrete Imp	Yes
Tank Foundation: Unknown	No
Tank Foundation: Other	No
Tank Foundation: Other Note	Not reported
Tank Roof: Float	No
Tank Roof: Cone	No
Tank Roof: Breather	Not reported
Tank Roof: Dbldeck	Not reported
Tank Roof: Pontoon	Not reported
Tank Roof: Balloon	Not reported
Tank Roof: Lifter	Not reported
Tank Roof: Pan	Not reported
Tank Roof: Other	No
Tank Roof: Other Note	Not reported

Tank Material:

Tank Materials: Bare Steel	No
Tank Materials: Concrete	Yes
Tank Materials: Insulated Tank Jacket	No
Tank Materials: Unknown	No
Tank Materials: Other	No

VERIZON-ONANCOCK CO (Continued) **U003689751**

Tank Materials: Other Note	Not reported
Tank Type Cathodic/CP:	N
Tank Type Single Wall:	N
Tank Type Double Wall:	N
Tank Type Lined Interior:	N
Tank Type Double Bottom:	N
Tank Type Potable/Skid:	N
Tank Type Shop Fabricated/Built:	N
Tank Type Vaulted Below Grade:	N
Tank Type Vertical:	N
Tank Type Horizontal:	N
Tank Type Unknown:	N
Tank Type Other:	N
Tank Type Other Specify:	N

A2 **CHESAPEAKE & POTOMAC TELEPHONE CO** **RCRA NonGen / NLR** **1000377252**
NNE **150 MARKET ST** **FINDS** **VAD980719447**
1/8-1/4 **ONANCOCK, VA 23417** **ECHO**
0.139 mi.
732 ft. **Site 2 of 3 in cluster A**

Relative:
Higher

Actual:
20 ft.

RCRA NonGen / NLR:

Date Form Received by Agency:	19801219
Handler Name:	CHESAPEAKE & POTOMAC TELEPHONE CO
Handler Address:	150 MARKET ST
Handler City,State,Zip:	ONANCOCK, VA 23417
EPA ID:	VAD980719447
Contact Name:	ELIZABETH_B COFFEY
Contact Address:	150 MARKET ST
Contact City,State,Zip:	ONANCOCK, VA 23417
Contact Telephone:	202-392-5406
Contact Fax:	Not reported
Contact Email:	Not reported
Contact Title:	Not reported
EPA Region:	03
Land Type:	Not reported
Federal Waste Generator Description:	Not a generator, verified
Non-Notifier:	Not reported
Biennial Report Cycle:	Not reported
Accessibility:	Not reported
Active Site Indicator:	Not reported
State District Owner:	VA
State District:	6
Mailing Address:	1730 PENNSYLVANIA AVE NW RM700
Mailing City,State,Zip:	WASHINGTON, DC 20006
Owner Name:	CHESAPEAKE & POTOMAC TELEPHONE COMPANY
Owner Type:	Private
Operator Name:	OPERNAME
Operator Type:	Private
Short-Term Generator Activity:	No
Importer Activity:	No
Mixed Waste Generator:	No
Transporter Activity:	No
Transfer Facility Activity:	No
Recycler Activity with Storage:	No
Small Quantity On-Site Burner Exemption:	No

CHESAPEAKE & POTOMAC TELEPHONE CO (Continued) **1000377252**

Smelting Melting and Refining Furnace Exemption:	No
Underground Injection Control:	No
Off-Site Waste Receipt:	No
Universal Waste Indicator:	No
Universal Waste Destination Facility:	No
Federal Universal Waste:	No
Active Site Fed-Reg Treatment Storage and Disposal Facility:	Not reported
Active Site Converter Treatment storage and Disposal Facility:	Not reported
Active Site State-Reg Treatment Storage and Disposal Facility:	Not reported
Active Site State-Reg Handler:	---
Federal Facility Indicator:	Not reported
Hazardous Secondary Material Indicator:	NN
Sub-Part K Indicator:	Not reported
Commercial TSD Indicator:	No
Treatment Storage and Disposal Type:	Not reported
2018 GPRA Permit Baseline:	Not on the Baseline
2018 GPRA Renewals Baseline:	Not on the Baseline
Permit Renewals Workload Universe:	Not reported
Permit Workload Universe:	Not reported
Permit Progress Universe:	Not reported
Post-Closure Workload Universe:	Not reported
Closure Workload Universe:	Not reported
202 GPRA Corrective Action Baseline:	No
Corrective Action Workload Universe:	No
Subject to Corrective Action Universe:	No
Non-TSDFs Where RCRA CA has Been Imposed Universe:	No
TSDFs Potentially Subject to CA Under 3004 (u)/(v) Universe:	No
TSDFs Only Subject to CA under Discretionary Auth Universe:	No
Corrective Action Priority Ranking:	No NCAPS ranking
Environmental Control Indicator:	No
Institutional Control Indicator:	No
Human Exposure Controls Indicator:	N/A
Groundwater Controls Indicator:	N/A
Operating TSDF Universe:	Not reported
Full Enforcement Universe:	Not reported
Significant Non-Complier Universe:	No
Unaddressed Significant Non-Complier Universe:	No
Addressed Significant Non-Complier Universe:	No
Significant Non-Complier With a Compliance Schedule Universe:	No
Financial Assurance Required:	Not reported
Handler Date of Last Change:	20150414
Recognized Trader-Importer:	No
Recognized Trader-Exporter:	No
Importer of Spent Lead Acid Batteries:	No
Exporter of Spent Lead Acid Batteries:	No
Recycler Activity Without Storage:	Not reported
Manifest Broker:	Not reported
Sub-Part P Indicator:	No

Hazardous Waste Summary:

Waste Code:	D000
Waste Description:	Not Defined
Waste Code:	D002
Waste Description:	CORROSIVE WASTE

CHESAPEAKE & POTOMAC TELEPHONE CO (Continued) **1000377252**

Handler - Owner Operator:

Owner/Operator Indicator:	Operator
Owner/Operator Name:	OPERNAME
Legal Status:	Private
Date Became Current:	Not reported
Date Ended Current:	Not reported
Owner/Operator Address:	OPERSTREET
Owner/Operator City,State,Zip:	OPERCITY, AK 99999
Owner/Operator Telephone:	215-555-1212
Owner/Operator Telephone Ext:	Not reported
Owner/Operator Fax:	Not reported
Owner/Operator Email:	Not reported

Owner/Operator Indicator:	Owner
Owner/Operator Name:	CHESAPEAKE & POTOMAC TELEPHONE COMPANY
Legal Status:	Private
Date Became Current:	Not reported
Date Ended Current:	Not reported
Owner/Operator Address:	OWNERSTREET
Owner/Operator City,State,Zip:	OWNERCITY, AK 99999
Owner/Operator Telephone:	215-555-1212
Owner/Operator Telephone Ext:	Not reported
Owner/Operator Fax:	Not reported
Owner/Operator Email:	Not reported

Historic Generators:

Receive Date:	19801219
Handler Name:	CHESAPEAKE & POTOMAC TELEPHONE CO
Federal Waste Generator Description:	Not a generator, verified
State District Owner:	VA
Large Quantity Handler of Universal Waste:	No
Recognized Trader Importer:	No
Recognized Trader Exporter:	No
Spent Lead Acid Battery Importer:	No
Spent Lead Acid Battery Exporter:	No
Current Record:	Yes
Non Storage Recycler Activity:	Not reported
Electronic Manifest Broker:	Not reported

List of NAICS Codes and Descriptions:

NAICS Codes:	No NAICS Codes Found

Facility Has Received Notices of Violations:

Violations:	No Violations Found

Evaluation Action Summary:

Evaluations:	No Evaluations Found

FINDS:

Registry ID: 110005228958

Click Here:

CHESAPEAKE & POTOMAC TELEPHONE CO (Continued) **1000377252**

Environmental Interest/Information System:
RCRAInfo is a national information system that supports the Resource Conservation and Recovery Act (RCRA) program through the tracking of events and activities related to facilities that generate, transport, and treat, store, or dispose of hazardous waste. RCRAInfo allows RCRA program staff to track the notification, permit, compliance, and corrective action activities required under RCRA.

Click this hyperlink while viewing on your computer to access additional FINDS: detail in the EDR Site Report.

ECHO:

Envid:	1000377252
Registry ID:	110005228958
DFR URL:	http://echo.epa.gov/detailed-facility-report?fid=110005228958
Name:	CHESAPEAKE & POTOMAC TELEPHONE CO
Address:	150 MARKET ST
City,State,Zip:	ONANCOCK, VA 23417

A3 **BELL ATLANTIC 150 WEST MARKET STREET** **LUST** **S108106424**
NNE **150 WEST MARKET STREET** **LTANKS** **N/A**
1/8-1/4 **ONANCOCK, VA 23417**
0.139 mi.
732 ft. **Site 3 of 3 in cluster A**

Relative:
Higher

Actual:
20 ft.

LUST REG TD:

Region:	TD
Region Code:	TRO
Facility ID:	200000064149
Facility Status:	**Closed**
Completed Date:	07/08/1992
Pollution Complaint Num:	19930070
Fed Regulated Tank:	Yes
Phase Code:	RR
Event Description:	Release Reported
Comments:	SOIL TPH OVER 1000 PPM

Region:	TD
Region Code:	TRO
Facility ID:	200000064149
Facility Status:	**Closed**
Completed Date:	08/10/1994
Pollution Complaint Num:	19930070
Fed Regulated Tank:	Yes
Phase Code:	CLOSURE
Event Description:	Case Closure Date - Letter Sent
Comments:	CASE CLOSED-NFA REQUIRED.

LTANKS:

Name:	BELL ATLANTIC
Address:	150 WEST MARKET STREET
City,State,Zip:	ONANCOCK, VA 23417
City,State,Zip:	ONANCOCK, VA 23417
Region:	TRO
CEDS Facility Id:	200000064149
Case Status:	**Closed**
Pollution Complaint #:	19930070

BELL ATLANTIC 150 WEST MARKET STREET (Continued) **S108106424**

Reported:	07/08/1992
Case Closed Date:	08/10/1994
Program:	RP Lead
Federally Regulated UST (Y/N):	Y
Regulated Petroleum UST (1):	N
Excluded UST (1):	N
Deferred UST (1):	N
Partially Deferred UST (1):	N
Exempt 1 UST (2):	N
Exempt 2 Heating Oil UST (2):	N
Small Heating Oil AST (2):	N
Regulated AST (3):	N
Unregulated AST (3):	N
Other Y/N:	N
Unknown Y/N:	N
Other Description:	Not reported
Heating Oil Category:	Not reported

B4 **ONANCOCK CHEVRON** **LUST** **U003690726**
NNE **146 MARKET ST** **LTANKS** **N/A**
1/8-1/4 **ONANCOCK, VA 23417** **UST**
0.150 mi.
792 ft. **Site 1 of 2 in cluster B**

Relative:
Higher

Actual:
20 ft.

LUST REG TD:

Region:	TD
Region Code:	TRO
Facility ID:	200000066438
Facility Status:	**Closed**
Completed Date:	04/03/2008
Pollution Complaint Num:	20085104
Fed Regulated Tank:	No
Phase Code:	RR
Event Description:	Release Reported
Comments:	Release reported

Region:	TD
Region Code:	TRO
Facility ID:	200000066438
Facility Status:	**Closed**
Completed Date:	05/15/2008
Pollution Complaint Num:	20085104
Fed Regulated Tank:	No
Phase Code:	CLOSURE
Event Description:	Case Closure Date - Letter Sent
Comments:	Case closed, no further corrective action letter sent

LTANKS:

Name:	SEPEDAS SERVICE CENTER
Address:	146 MARKET ST
City,State,Zip:	ONANCOCK, VA 23417
City,State,Zip:	ONANCOCK, VA 23417
Region:	TRO
CEDS Facility Id:	200000066438
Case Status:	**Closed**
Pollution Complaint #:	20085104
Reported:	04/03/2008

ONANCOCK CHEVRON (Continued) **U003690726**

Case Closed Date:	05/15/2008
Program:	RP Lead
Federally Regulated UST (Y/N):	N
Regulated Petroleum UST (1):	N
Excluded UST (1):	N
Deferred UST (1):	N
Partially Deferred UST (1):	N
Exempt 1 UST (2):	N
Exempt 2 Heating Oil UST (2):	N
Small Heating Oil AST (2):	N
Regulated AST (3):	N
Unregulated AST (3):	Y
Other Y/N:	N
Unknown Y/N:	N
Other Description:	Not reported
Heating Oil Category:	Not reported

Facility:

Name:	ONANCOCK CHEVRON
Address:	146 MARKET ST
City,State,Zip:	ONANCOCK, VA 23417
Facility Id:	5011073
Facility Type:	GAS STATION
CEDS Facility ID:	200000066438

Owner:

Owner Id:	36996
Owner Name:	Bagwell Oil Company Inc
Owner Address:	33 Market St
Owner Address2:	Not reported
Owner City, State, Zip:	Onancock, VA 23417
Owner Type:	COMMERCIAL
Number of Active AST:	0
Number of Active UST:	0
Number of Inactive AST:	0
Number of Inactive UST:	8

UST:

Facility ID:	5011073
Federally Regulated:	Yes
Tank Number:	1
Tank Capacity:	8000
Tank Contents:	GASOLINE
Tank Status:	**REM FROM GRD**
Tank Type:	UST

Tank Material:

Install Date:	4/1/1993
Tank Materials: Bare Steel	No
Tank Materials: Cath Protect Steel	No
Tank Materials: Epoxy Steel	No
Tank Materials: Fiberglass	No
Tank Materials: Concrete	No
Tank Materials: Composite	Yes
Tank Materials: Double Walled	No
Tank Materials: Lined Interior	No

ONANCOCK CHEVRON (Continued) **U003690726**

Tank Materials: Excav Liner	No
Tank Materials: Insulated Tank Jacket	No
Tank Materials: Repaired	No
Tank Materials: Unknown	No
Tank Materials: Other	No
Tank Materials: Other Note	Not reported

Release Detection:

Tank Release Detection: Leak Deferred	No
Tank Release Detection: Manual Gauge	No
Tank Release Detection: Auto Gauge	No
Tank Release Detection:Tank Tightness	No
Tank Release Detection: Vapor Monitor	No
Tank Release Detection: Inventory	No
Tank Release Detection: Stat Invent Recon	No
Tank Release Detection: Spill Install	Yes
Tank Release Detection: Overfill Install	Yes
Tank Release Detection: Groundwater	Yes
Tank Release Detection: Int Sec Containment	No
Tank Release Detection: Int Double Walled	No
Tank Release Detection: Other Method	No
Tank Release Detection: Other Note	Not reported
Pipe Release Detection: Leak Deferred	Not reported
Pipe Release Detection: Autoleak	Not reported
Pipe Release Detection: Line Tightness	No
Pipe Release Detection: Stat Invent Recon	No
Pipe Release Detection: Groundwater	Yes
Pipe Release Detection: Int Sec Containment	No
Pipe Release Det: Interior Double Walled	No
Pipe Release Detection: Other Method	No
Pipe Release Detection: Other Note	Overfill Ball Float Valve

Pipe Type:	NO VALVE SUCTION
Pipe Materials: Bare Steel	No
Pipe Materials: Galvanized Steel	No
Pipe Materials: Copper	No
Pipe Materials: Fiberglass	Yes
Pipe Materials: Cath Protect	Yes
Pipe Materials: Double Walled	Yes
Pipe Materials: Sec Containment	No
Pipe Materials: Repaired	No
Pipe Materials: Unknown	No
Pipe Materials: Other	No
Pipe Materials: Other Note	Not reported

Facility ID:	5011073
Federally Regulated:	Yes
Tank Number:	2
Tank Capacity:	4000
Tank Contents:	GASOLINE
Tank Status:	**REM FROM GRD**
Tank Type:	UST

Tank Material:

Install Date:	4/1/1993

ONANCOCK CHEVRON (Continued) **U003690726**

Tank Materials: Bare Steel	No
Tank Materials: Cath Protect Steel	No
Tank Materials: Epoxy Steel	No
Tank Materials: Fiberglass	No
Tank Materials: Concrete	No
Tank Materials: Composite	Yes
Tank Materials: Double Walled	No
Tank Materials: Lined Interior	No
Tank Materials: Excav Liner	No
Tank Materials: Insulated Tank Jacket	No
Tank Materials: Repaired	No
Tank Materials: Unknown	No
Tank Materials: Other	No
Tank Materials: Other Note	Not reported

Release Detection:

Tank Release Detection: Leak Deferred	No
Tank Release Detection: Manual Gauge	No
Tank Release Detection: Auto Gauge	No
Tank Release Detection:Tank Tightness	No
Tank Release Detection: Vapor Monitor	No
Tank Release Detection: Inventory	No
Tank Release Detection: Stat Invent Recon	No
Tank Release Detection: Spill Install	Yes
Tank Release Detection: Overfill Install	Yes
Tank Release Detection: Groundwater	Yes
Tank Release Detection: Int Sec Containment	No
Tank Release Detection: Int Double Walled	No
Tank Release Detection: Other Method	No
Tank Release Detection: Other Note	Not reported
Pipe Release Detection: Leak Deferred	Not reported
Pipe Release Detection: Autoleak	Not reported
Pipe Release Detection: Line Tightness	No
Pipe Release Detection: Stat Invent Recon	No
Pipe Release Detection: Groundwater	Yes
Pipe Release Detection: Int Sec Containment	No
Pipe Release Det: Interior Double Walled	No
Pipe Release Detection: Other Method	No
Pipe Release Detection: Other Note	Overfill Ball Float Valve

Pipe Type:	NO VALVE SUCTION
Pipe Materials: Bare Steel	No
Pipe Materials: Galvanized Steel	No
Pipe Materials: Copper	No
Pipe Materials: Fiberglass	Yes
Pipe Materials: Cath Protect	No
Pipe Materials: Double Walled	No
Pipe Materials: Sec Containment	No
Pipe Materials: Repaired	No
Pipe Materials: Unknown	No
Pipe Materials: Other	No
Pipe Materials: Other Note	Not reported

Facility ID:	5011073
Federally Regulated:	No

ONANCOCK CHEVRON (Continued) **U003690726**

Tank Number:	3
Tank Capacity:	4000
Tank Contents:	GASOLINE
Tank Status:	**REM FROM GRD**
Tank Type:	UST

Tank Material:

Install Date:	4/1/1993
Tank Materials: Bare Steel	No
Tank Materials: Cath Protect Steel	No
Tank Materials: Epoxy Steel	No
Tank Materials: Fiberglass	No
Tank Materials: Concrete	No
Tank Materials: Composite	Yes
Tank Materials: Double Walled	No
Tank Materials: Lined Interior	No
Tank Materials: Excav Liner	No
Tank Materials: Insulated Tank Jacket	No
Tank Materials: Repaired	No
Tank Materials: Unknown	No
Tank Materials: Other	No
Tank Materials: Other Note	Not reported

Release Detection:

Tank Release Detection: Leak Deferred	No
Tank Release Detection: Manual Gauge	No
Tank Release Detection: Auto Gauge	No
Tank Release Detection:Tank Tightness	No
Tank Release Detection: Vapor Monitor	No
Tank Release Detection: Inventory	No
Tank Release Detection: Stat Invent Recon	No
Tank Release Detection: Spill Install	Yes
Tank Release Detection: Overfill Install	Yes
Tank Release Detection: Groundwater	Yes
Tank Release Detection: Int Sec Containment	No
Tank Release Detection: Int Double Walled	No
Tank Release Detection: Other Method	No
Tank Release Detection: Other Note	Not reported
Pipe Release Detection: Leak Deferred	No
Pipe Release Detection: Autoleak	Not reported
Pipe Release Detection: Line Tightness	No
Pipe Release Detection: Stat Invent Recon	No
Pipe Release Detection: Groundwater	Yes
Pipe Release Detection: Int Sec Containment	No
Pipe Release Det: Interior Double Walled	No
Pipe Release Detection: Other Method	No
Pipe Release Detection: Other Note	Overfill Ball Float Valve

Pipe Type:	NO VALVE SUCTION
Pipe Materials: Bare Steel	No
Pipe Materials: Galvanized Steel	No
Pipe Materials: Copper	No
Pipe Materials: Fiberglass	Yes
Pipe Materials: Cath Protect	No
Pipe Materials: Double Walled	No
Pipe Materials: Sec Containment	No
Pipe Materials: Repaired	No

ONANCOCK CHEVRON (Continued) **U003690726**

Pipe Materials: Unknown	No
Pipe Materials: Other	No
Pipe Materials: Other Note	Not reported
Facility ID:	5011073
Federally Regulated:	Yes
Tank Number:	R1
Tank Capacity:	2000
Tank Contents:	GASOLINE
Tank Status:	**REM FROM GRD**
Tank Type:	UST
Tank Material:	
Install Date:	4/29/1979
Tank Materials: Bare Steel	Yes
Tank Materials: Cath Protect Steel	No
Tank Materials: Epoxy Steel	No
Tank Materials: Fiberglass	No
Tank Materials: Concrete	No
Tank Materials: Composite	No
Tank Materials: Double Walled	No
Tank Materials: Lined Interior	No
Tank Materials: Excav Liner	No
Tank Materials: Insulated Tank Jacket	No
Tank Materials: Repaired	No
Tank Materials: Unknown	No
Tank Materials: Other	No
Tank Materials: Other Note	Not reported
Release Detection:	
Tank Release Detection: Leak Deferred	No
Tank Release Detection: Manual Gauge	No
Tank Release Detection: Auto Gauge	No
Tank Release Detection:Tank Tightness	No
Tank Release Detection: Vapor Monitor	No
Tank Release Detection: Inventory	No
Tank Release Detection: Stat Invent Recon	No
Tank Release Detection: Spill Install	No
Tank Release Detection: Overfill Install	No
Tank Release Detection: Groundwater	No
Tank Release Detection: Int Sec Containment	No
Tank Release Detection: Int Double Walled	No
Tank Release Detection: Other Method	No
Tank Release Detection: Other Note	Not reported
Pipe Release Detection: Leak Deferred	Not reported
Pipe Release Detection: Autoleak	Not reported
Pipe Release Detection: Line Tightness	No
Pipe Release Detection: Stat Invent Recon	No
Pipe Release Detection: Groundwater	No
Pipe Release Detection: Int Sec Containment	No
Pipe Release Det: Interior Double Walled	No
Pipe Release Detection: Other Method	No
Pipe Release Detection: Other Note	Not reported
Pipe Type:	UNKNOWN

ONANCOCK CHEVRON (Continued) **U003690726**

Pipe Materials: Bare Steel	No
Pipe Materials: Galvanized Steel	Yes
Pipe Materials: Copper	No
Pipe Materials: Fiberglass	No
Pipe Materials: Cath Protect	No
Pipe Materials: Double Walled	No
Pipe Materials: Sec Containment	No
Pipe Materials: Repaired	No
Pipe Materials: Unknown	No
Pipe Materials: Other	No
Pipe Materials: Other Note	Not reported

Facility ID:	5011073
Federally Regulated:	Yes
Tank Number:	R2
Tank Capacity:	2000
Tank Contents:	GASOLINE
Tank Status:	**REM FROM GRD**
Tank Type:	UST

Tank Material:

Install Date:	4/29/1979
Tank Materials: Bare Steel	Yes
Tank Materials: Cath Protect Steel	No
Tank Materials: Epoxy Steel	No
Tank Materials: Fiberglass	No
Tank Materials: Concrete	No
Tank Materials: Composite	No
Tank Materials: Double Walled	No
Tank Materials: Lined Interior	No
Tank Materials: Excav Liner	No
Tank Materials: Insulated Tank Jacket	No
Tank Materials: Repaired	No
Tank Materials: Unknown	No
Tank Materials: Other	No
Tank Materials: Other Note	Not reported

Release Detection:

Tank Release Detection: Leak Deferred	No
Tank Release Detection: Manual Gauge	No
Tank Release Detection: Auto Gauge	No
Tank Release Detection:Tank Tightness	No
Tank Release Detection: Vapor Monitor	No
Tank Release Detection: Inventory	No
Tank Release Detection: Stat Invent Recon	No
Tank Release Detection: Spill Install	No
Tank Release Detection: Overfill Install	No
Tank Release Detection: Groundwater	No
Tank Release Detection: Int Sec Containment	No
Tank Release Detection: Int Double Walled	No
Tank Release Detection: Other Method	No
Tank Release Detection: Other Note	Not reported
Pipe Release Detection: Leak Deferred	Not reported
Pipe Release Detection: Autoleak	Not reported
Pipe Release Detection: Line Tightness	No

ONANCOCK CHEVRON (Continued) **U003690726**

Pipe Release Detection: Stat Invent Recon	No
Pipe Release Detection: Groundwater	No
Pipe Release Detection: Int Sec Containment	No
Pipe Release Det: Interior Double Walled	No
Pipe Release Detection: Other Method	No
Pipe Release Detection: Other Note	Not reported
Pipe Type:	UNKNOWN
Pipe Materials: Bare Steel	No
Pipe Materials: Galvanized Steel	Yes
Pipe Materials: Copper	No
Pipe Materials: Fiberglass	No
Pipe Materials: Cath Protect	No
Pipe Materials: Double Walled	No
Pipe Materials: Sec Containment	No
Pipe Materials: Repaired	No
Pipe Materials: Unknown	No
Pipe Materials: Other	No
Pipe Materials: Other Note	Not reported
Facility ID:	5011073
Federally Regulated:	Yes
Tank Number:	R3
Tank Capacity:	2000
Tank Contents:	GASOLINE
Tank Status:	**REM FROM GRD**
Tank Type:	UST

Tank Material:

Install Date:	4/29/1979
Tank Materials: Bare Steel	Yes
Tank Materials: Cath Protect Steel	No
Tank Materials: Epoxy Steel	No
Tank Materials: Fiberglass	No
Tank Materials: Concrete	No
Tank Materials: Composite	No
Tank Materials: Double Walled	No
Tank Materials: Lined Interior	No
Tank Materials: Excav Liner	No
Tank Materials: Insulated Tank Jacket	No
Tank Materials: Repaired	No
Tank Materials: Unknown	No
Tank Materials: Other	No
Tank Materials: Other Note	Not reported

Release Detection:

Tank Release Detection: Leak Deferred	No
Tank Release Detection: Manual Gauge	No
Tank Release Detection: Auto Gauge	No
Tank Release Detection:Tank Tightness	No
Tank Release Detection: Vapor Monitor	No
Tank Release Detection: Inventory	No
Tank Release Detection: Stat Invent Recon	No
Tank Release Detection: Spill Install	No
Tank Release Detection: Overfill Install	No

ONANCOCK CHEVRON (Continued) **U003690726**

Tank Release Detection: Groundwater	No
Tank Release Detection: Int Sec Containment	No
Tank Release Detection: Int Double Walled	No
Tank Release Detection: Other Method	No
Tank Release Detection: Other Note	Not reported
Pipe Release Detection: Leak Deferred	Not reported
Pipe Release Detection: Autoleak	Not reported
Pipe Release Detection: Line Tightness	No
Pipe Release Detection: Stat Invent Recon	No
Pipe Release Detection: Groundwater	No
Pipe Release Detection: Int Sec Containment	No
Pipe Release Det: Interior Double Walled	No
Pipe Release Detection: Other Method	No
Pipe Release Detection: Other Note	Not reported
Pipe Type:	UNKNOWN
Pipe Materials: Bare Steel	No
Pipe Materials: Galvanized Steel	Yes
Pipe Materials: Copper	No
Pipe Materials: Fiberglass	No
Pipe Materials: Cath Protect	No
Pipe Materials: Double Walled	No
Pipe Materials: Sec Containment	No
Pipe Materials: Repaired	No
Pipe Materials: Unknown	No
Pipe Materials: Other	No
Pipe Materials: Other Note	Not reported
Facility ID:	5011073
Federally Regulated:	Yes
Tank Number:	R4
Tank Capacity:	1000
Tank Contents:	GASOLINE
Tank Status:	**REM FROM GRD**
Tank Type:	UST

Tank Material:

Install Date:	4/29/1979
Tank Materials: Bare Steel	Yes
Tank Materials: Cath Protect Steel	No
Tank Materials: Epoxy Steel	No
Tank Materials: Fiberglass	No
Tank Materials: Concrete	No
Tank Materials: Composite	No
Tank Materials: Double Walled	No
Tank Materials: Lined Interior	No
Tank Materials: Excav Liner	No
Tank Materials: Insulated Tank Jacket	No
Tank Materials: Repaired	No
Tank Materials: Unknown	No
Tank Materials: Other	No
Tank Materials: Other Note	Not reported

Release Detection:

Tank Release Detection: Leak Deferred	No

ONANCOCK CHEVRON (Continued) **U003690726**

Tank Release Detection: Manual Gauge	No
Tank Release Detection: Auto Gauge	No
Tank Release Detection:Tank Tightness	No
Tank Release Detection: Vapor Monitor	No
Tank Release Detection: Inventory	No
Tank Release Detection: Stat Invent Recon	No
Tank Release Detection: Spill Install	No
Tank Release Detection: Overfill Install	No
Tank Release Detection: Groundwater	No
Tank Release Detection: Int Sec Containment	No
Tank Release Detection: Int Double Walled	No
Tank Release Detection: Other Method	No
Tank Release Detection: Other Note	Not reported
Pipe Release Detection: Leak Deferred	Not reported
Pipe Release Detection: Autoleak	Not reported
Pipe Release Detection: Line Tightness	No
Pipe Release Detection: Stat Invent Recon	No
Pipe Release Detection: Groundwater	No
Pipe Release Detection: Int Sec Containment	No
Pipe Release Det: Interior Double Walled	No
Pipe Release Detection: Other Method	No
Pipe Release Detection: Other Note	Not reported
Pipe Type:	UNKNOWN
Pipe Materials: Bare Steel	No
Pipe Materials: Galvanized Steel	Yes
Pipe Materials: Copper	No
Pipe Materials: Fiberglass	No
Pipe Materials: Cath Protect	No
Pipe Materials: Double Walled	No
Pipe Materials: Sec Containment	No
Pipe Materials: Repaired	No
Pipe Materials: Unknown	No
Pipe Materials: Other	No
Pipe Materials: Other Note	Not reported
Facility ID:	5011073
Federally Regulated:	Yes
Tank Number:	R5
Tank Capacity:	550
Tank Contents:	UNKNOWN
Tank Status:	**REM FROM GRD**
Tank Type:	UST

Tank Material:

Install Date:	4/29/1979
Tank Materials: Bare Steel	Yes
Tank Materials: Cath Protect Steel	No
Tank Materials: Epoxy Steel	No
Tank Materials: Fiberglass	No
Tank Materials: Concrete	No
Tank Materials: Composite	No
Tank Materials: Double Walled	No
Tank Materials: Lined Interior	No
Tank Materials: Excav Liner	No
Tank Materials: Insulated Tank Jacket	No

ONANCOCK CHEVRON (Continued) **U003690726**

Tank Materials: Repaired	No
Tank Materials: Unknown	No
Tank Materials: Other	No
Tank Materials: Other Note	Not reported

Release Detection:

Tank Release Detection: Leak Deferred	No
Tank Release Detection: Manual Gauge	No
Tank Release Detection: Auto Gauge	No
Tank Release Detection:Tank Tightness	No
Tank Release Detection: Vapor Monitor	No
Tank Release Detection: Inventory	No
Tank Release Detection: Stat Invent Recon	No
Tank Release Detection: Spill Install	No
Tank Release Detection: Overfill Install	No
Tank Release Detection: Groundwater	No
Tank Release Detection: Int Sec Containment	No
Tank Release Detection: Int Double Walled	No
Tank Release Detection: Other Method	No
Tank Release Detection: Other Note	Not reported
Pipe Release Detection: Leak Deferred	Not reported
Pipe Release Detection: Autoleak	Not reported
Pipe Release Detection: Line Tightness	No
Pipe Release Detection: Stat Invent Recon	No
Pipe Release Detection: Groundwater	No
Pipe Release Detection: Int Sec Containment	No
Pipe Release Det: Interior Double Walled	No
Pipe Release Detection: Other Method	No
Pipe Release Detection: Other Note	Not reported

Pipe Type:	UNKNOWN
Pipe Materials: Bare Steel	No
Pipe Materials: Galvanized Steel	Yes
Pipe Materials: Copper	No
Pipe Materials: Fiberglass	No
Pipe Materials: Cath Protect	No
Pipe Materials: Double Walled	No
Pipe Materials: Sec Containment	No
Pipe Materials: Repaired	No
Pipe Materials: Unknown	No
Pipe Materials: Other	No
Pipe Materials: Other Note	Not reported

---

5 **ED BLAKES BP** **LUST** **U003690725**
ENE **175 MARKET STREET** **LTANKS** **N/A**
1/8-1/4 **ONANCOCK, VA 23417** **UST**
0.170 mi.
896 ft.

Relative:
Higher

Actual:
22 ft.

LUST REG TD:

Region:	TD
Region Code:	TRO
Facility ID:	200000090988
Facility Status:	**Closed**
Completed Date:	06/06/2001
Pollution Complaint Num:	19952368

ED BLAKES BP (Continued) **U003690725**

Fed Regulated Tank:	Yes
Phase Code:	SL_CLOSURE
Event Description:	State Lead Case Closed
Comments:	Site Closure letter issued
Region:	TD
Region Code:	TRO
Facility ID:	200000090988
Facility Status:	**Closed**
Completed Date:	03/23/1995
Pollution Complaint Num:	19952368
Fed Regulated Tank:	Yes
Phase Code:	RR
Event Description:	Release Reported
Comments:	CONTAMINATION FOUND DURING UST EXCAVATIONS (SOIL & FP ON PIT WATER).

LTANKS:

Name:	ED BLAKES BP
Address:	175 MARKET STREET
City,State,Zip:	ONANCOCK, VA 23417
City,State,Zip:	ONANCOCK, VA 23417
Region:	TRO
CEDS Facility Id:	200000090988
Case Status:	**Closed**
Pollution Complaint #:	19952368
Reported:	03/23/1995
Case Closed Date:	06/06/2001
Program:	State Lead
Federally Regulated UST (Y/N):	Y
Regulated Petroleum UST (1):	Y
Excluded UST (1):	N
Deferred UST (1):	N
Partially Deferred UST (1):	N
Exempt 1 UST (2):	N
Exempt 2 Heating Oil UST (2):	N
Small Heating Oil AST (2):	N
Regulated AST (3):	N
Unregulated AST (3):	N
Other Y/N:	N
Unknown Y/N:	N
Other Description:	Not reported
Heating Oil Category:	Not reported

Facility:

Name:	ED BLAKES BP
Address:	175 MARKET STREET
City,State,Zip:	ONANCOCK, VA 23417
Facility Id:	5011072
Facility Type:	GAS STATION
CEDS Facility ID:	200000090988

Owner:

Owner Id:	36996
Owner Name:	Bagwell Oil Company Inc
Owner Address:	33 Market St
Owner Address2:	Not reported
Owner City, State, Zip:	Onancock, VA 23417

ED BLAKES BP (Continued) **U003690725**

Owner Type:	COMMERCIAL
Number of Active AST:	0
Number of Active UST:	0
Number of Inactive AST:	0
Number of Inactive UST:	9

UST:

Facility ID:	5011072
Federally Regulated:	Yes
Tank Number:	NORDSTROM1
Tank Capacity:	4000
Tank Contents:	GASOLINE
Tank Status:	**REM FROM GRD**
Tank Type:	UST

Tank Material:

Install Date:	Not reported
Tank Materials: Bare Steel	Yes
Tank Materials: Cath Protect Steel	No
Tank Materials: Epoxy Steel	No
Tank Materials: Fiberglass	No
Tank Materials: Concrete	No
Tank Materials: Composite	No
Tank Materials: Double Walled	No
Tank Materials: Lined Interior	No
Tank Materials: Excav Liner	No
Tank Materials: Insulated Tank Jacket	No
Tank Materials: Repaired	No
Tank Materials: Unknown	No
Tank Materials: Other	No
Tank Materials: Other Note	Not reported

Release Detection:

Tank Release Detection: Leak Deferred	No
Tank Release Detection: Manual Gauge	No
Tank Release Detection: Auto Gauge	No
Tank Release Detection:Tank Tightness	No
Tank Release Detection: Vapor Monitor	No
Tank Release Detection: Inventory	No
Tank Release Detection: Stat Invent Recon	No
Tank Release Detection: Spill Install	No
Tank Release Detection: Overfill Install	No
Tank Release Detection: Groundwater	No
Tank Release Detection: Int Sec Containment	No
Tank Release Detection: Int Double Walled	No
Tank Release Detection: Other Method	No
Tank Release Detection: Other Note	Not reported
Pipe Release Detection: Leak Deferred	Not reported
Pipe Release Detection: Autoleak	Not reported
Pipe Release Detection: Line Tightness	No
Pipe Release Detection: Stat Invent Recon	No
Pipe Release Detection: Groundwater	No
Pipe Release Detection: Int Sec Containment	No
Pipe Release Det: Interior Double Walled	No
Pipe Release Detection: Other Method	No
Pipe Release Detection: Other Note	Not reported

ED BLAKES BP (Continued) **U003690725**

Pipe Type:	VALVE SUCTION
Pipe Materials: Bare Steel	No
Pipe Materials: Galvanized Steel	Yes
Pipe Materials: Copper	No
Pipe Materials: Fiberglass	No
Pipe Materials: Cath Protect	No
Pipe Materials: Double Walled	No
Pipe Materials: Sec Containment	No
Pipe Materials: Repaired	No
Pipe Materials: Unknown	No
Pipe Materials: Other	No
Pipe Materials: Other Note	Not reported

Facility ID:	5011072
Federally Regulated:	Yes

Tank Number:	NORDSTROM2
Tank Capacity:	4000
Tank Contents:	GASOLINE
Tank Status:	**REM FROM GRD**
Tank Type:	UST

Tank Material:

Install Date:	Not reported
Tank Materials: Bare Steel	Yes
Tank Materials: Cath Protect Steel	No
Tank Materials: Epoxy Steel	No
Tank Materials: Fiberglass	No
Tank Materials: Concrete	No
Tank Materials: Composite	No
Tank Materials: Double Walled	No
Tank Materials: Lined Interior	No
Tank Materials: Excav Liner	No
Tank Materials: Insulated Tank Jacket	No
Tank Materials: Repaired	No
Tank Materials: Unknown	No
Tank Materials: Other	No
Tank Materials: Other Note	Not reported

Release Detection:

Tank Release Detection: Leak Deferred	No
Tank Release Detection: Manual Gauge	No
Tank Release Detection: Auto Gauge	No
Tank Release Detection:Tank Tightness	No
Tank Release Detection: Vapor Monitor	No
Tank Release Detection: Inventory	No
Tank Release Detection: Stat Invent Recon	No
Tank Release Detection: Spill Install	No
Tank Release Detection: Overfill Install	No
Tank Release Detection: Groundwater	No
Tank Release Detection: Int Sec Containment	No
Tank Release Detection: Int Double Walled	No
Tank Release Detection: Other Method	No
Tank Release Detection: Other Note	Not reported
Pipe Release Detection: Leak Deferred	Not reported
Pipe Release Detection: Autoleak	Not reported

ED BLAKES BP (Continued) **U003690725**

Pipe Release Detection: Line Tightness	No
Pipe Release Detection: Stat Invent Recon	No
Pipe Release Detection: Groundwater	No
Pipe Release Detection: Int Sec Containment	No
Pipe Release Det: Interior Double Walled	No
Pipe Release Detection: Other Method	No
Pipe Release Detection: Other Note	Not reported
Pipe Type:	VALVE SUCTION
Pipe Materials: Bare Steel	No
Pipe Materials: Galvanized Steel	Yes
Pipe Materials: Copper	No
Pipe Materials: Fiberglass	No
Pipe Materials: Cath Protect	No
Pipe Materials: Double Walled	No
Pipe Materials: Sec Containment	No
Pipe Materials: Repaired	No
Pipe Materials: Unknown	No
Pipe Materials: Other	No
Pipe Materials: Other Note	Not reported
Facility ID:	5011072
Federally Regulated:	Yes
Tank Number:	NORDSTROM3
Tank Capacity:	4000
Tank Contents:	GASOLINE
Tank Status:	**REM FROM GRD**
Tank Type:	UST

Tank Material:

Install Date:	Not reported
Tank Materials: Bare Steel	Yes
Tank Materials: Cath Protect Steel	No
Tank Materials: Epoxy Steel	No
Tank Materials: Fiberglass	No
Tank Materials: Concrete	No
Tank Materials: Composite	No
Tank Materials: Double Walled	No
Tank Materials: Lined Interior	No
Tank Materials: Excav Liner	No
Tank Materials: Insulated Tank Jacket	No
Tank Materials: Repaired	No
Tank Materials: Unknown	No
Tank Materials: Other	No
Tank Materials: Other Note	Not reported

Release Detection:

Tank Release Detection: Leak Deferred	No
Tank Release Detection: Manual Gauge	No
Tank Release Detection: Auto Gauge	No
Tank Release Detection:Tank Tightness	No
Tank Release Detection: Vapor Monitor	No
Tank Release Detection: Inventory	No
Tank Release Detection: Stat Invent Recon	No
Tank Release Detection: Spill Install	No

ED BLAKES BP (Continued) **U003690725**

Tank Release Detection: Overfill Install	No
Tank Release Detection: Groundwater	No
Tank Release Detection: Int Sec Containment	No
Tank Release Detection: Int Double Walled	No
Tank Release Detection: Other Method	No
Tank Release Detection: Other Note	Not reported
Pipe Release Detection: Leak Deferred	Not reported
Pipe Release Detection: Autoleak	Not reported
Pipe Release Detection: Line Tightness	No
Pipe Release Detection: Stat Invent Recon	No
Pipe Release Detection: Groundwater	No
Pipe Release Detection: Int Sec Containment	No
Pipe Release Det: Interior Double Walled	No
Pipe Release Detection: Other Method	No
Pipe Release Detection: Other Note	Not reported
Pipe Type:	VALVE SUCTION
Pipe Materials: Bare Steel	No
Pipe Materials: Galvanized Steel	Yes
Pipe Materials: Copper	No
Pipe Materials: Fiberglass	No
Pipe Materials: Cath Protect	No
Pipe Materials: Double Walled	No
Pipe Materials: Sec Containment	No
Pipe Materials: Repaired	No
Pipe Materials: Unknown	No
Pipe Materials: Other	No
Pipe Materials: Other Note	Not reported
Facility ID:	5011072
Federally Regulated:	Yes
Tank Number:	NORDSTROM4
Tank Capacity:	4000
Tank Contents:	GASOLINE
Tank Status:	**REM FROM GRD**
Tank Type:	UST

Tank Material:

Install Date:	Not reported
Tank Materials: Bare Steel	Yes
Tank Materials: Cath Protect Steel	No
Tank Materials: Epoxy Steel	No
Tank Materials: Fiberglass	No
Tank Materials: Concrete	No
Tank Materials: Composite	No
Tank Materials: Double Walled	No
Tank Materials: Lined Interior	No
Tank Materials: Excav Liner	No
Tank Materials: Insulated Tank Jacket	No
Tank Materials: Repaired	No
Tank Materials: Unknown	No
Tank Materials: Other	No
Tank Materials: Other Note	Not reported

Release Detection:

ED BLAKES BP (Continued) **U003690725**

Tank Release Detection: Leak Deferred	No
Tank Release Detection: Manual Gauge	No
Tank Release Detection: Auto Gauge	No
Tank Release Detection:Tank Tightness	No
Tank Release Detection: Vapor Monitor	No
Tank Release Detection: Inventory	No
Tank Release Detection: Stat Invent Recon	No
Tank Release Detection: Spill Install	No
Tank Release Detection: Overfill Install	No
Tank Release Detection: Groundwater	No
Tank Release Detection: Int Sec Containment	No
Tank Release Detection: Int Double Walled	No
Tank Release Detection: Other Method	No
Tank Release Detection: Other Note	Not reported
Pipe Release Detection: Leak Deferred	Not reported
Pipe Release Detection: Autoleak	Not reported
Pipe Release Detection: Line Tightness	No
Pipe Release Detection: Stat Invent Recon	No
Pipe Release Detection: Groundwater	No
Pipe Release Detection: Int Sec Containment	No
Pipe Release Det: Interior Double Walled	No
Pipe Release Detection: Other Method	No
Pipe Release Detection: Other Note	Not reported
Pipe Type:	VALVE SUCTION
Pipe Materials: Bare Steel	No
Pipe Materials: Galvanized Steel	Yes
Pipe Materials: Copper	No
Pipe Materials: Fiberglass	No
Pipe Materials: Cath Protect	No
Pipe Materials: Double Walled	No
Pipe Materials: Sec Containment	No
Pipe Materials: Repaired	No
Pipe Materials: Unknown	No
Pipe Materials: Other	No
Pipe Materials: Other Note	Not reported
Facility ID:	5011072
Federally Regulated:	Yes
Tank Number:	R1
Tank Capacity:	4000
Tank Contents:	GASOLINE
Tank Status:	**REM FROM GRD**
Tank Type:	UST

Tank Material:

Install Date:	4/29/1977
Tank Materials: Bare Steel	Yes
Tank Materials: Cath Protect Steel	No
Tank Materials: Epoxy Steel	No
Tank Materials: Fiberglass	No
Tank Materials: Concrete	No
Tank Materials: Composite	No
Tank Materials: Double Walled	No
Tank Materials: Lined Interior	No
Tank Materials: Excav Liner	No

ED BLAKES BP (Continued) **U003690725**

Tank Materials: Insulated Tank Jacket	No
Tank Materials: Repaired	No
Tank Materials: Unknown	No
Tank Materials: Other	No
Tank Materials: Other Note	Not reported

Release Detection:

Tank Release Detection: Leak Deferred	No
Tank Release Detection: Manual Gauge	No
Tank Release Detection: Auto Gauge	No
Tank Release Detection:Tank Tightness	No
Tank Release Detection: Vapor Monitor	No
Tank Release Detection: Inventory	No
Tank Release Detection: Stat Invent Recon	No
Tank Release Detection: Spill Install	No
Tank Release Detection: Overfill Install	No
Tank Release Detection: Groundwater	Yes
Tank Release Detection: Int Sec Containment	No
Tank Release Detection: Int Double Walled	No
Tank Release Detection: Other Method	No
Tank Release Detection: Other Note	Not reported
Pipe Release Detection: Leak Deferred	Not reported
Pipe Release Detection: Autoleak	Not reported
Pipe Release Detection: Line Tightness	No
Pipe Release Detection: Stat Invent Recon	No
Pipe Release Detection: Groundwater	No
Pipe Release Detection: Int Sec Containment	No
Pipe Release Det: Interior Double Walled	No
Pipe Release Detection: Other Method	No
Pipe Release Detection: Other Note	Not reported

Pipe Type:	NO VALVE SUCTION
Pipe Materials: Bare Steel	No
Pipe Materials: Galvanized Steel	Yes
Pipe Materials: Copper	No
Pipe Materials: Fiberglass	No
Pipe Materials: Cath Protect	No
Pipe Materials: Double Walled	No
Pipe Materials: Sec Containment	No
Pipe Materials: Repaired	No
Pipe Materials: Unknown	No
Pipe Materials: Other	No
Pipe Materials: Other Note	Not reported

Facility ID:	5011072
Federally Regulated:	Yes
Tank Number:	R2
Tank Capacity:	1000
Tank Contents:	GASOLINE
Tank Status:	**REM FROM GRD**
Tank Type:	UST

Tank Material:

Install Date:	4/29/1977
Tank Materials: Bare Steel	Yes

ED BLAKES BP (Continued) **U003690725**

Tank Materials: Cath Protect Steel	No
Tank Materials: Epoxy Steel	No
Tank Materials: Fiberglass	No
Tank Materials: Concrete	No
Tank Materials: Composite	No
Tank Materials: Double Walled	No
Tank Materials: Lined Interior	No
Tank Materials: Excav Liner	No
Tank Materials: Insulated Tank Jacket	No
Tank Materials: Repaired	No
Tank Materials: Unknown	No
Tank Materials: Other	No
Tank Materials: Other Note	Not reported

Release Detection:

Tank Release Detection: Leak Deferred	No
Tank Release Detection: Manual Gauge	No
Tank Release Detection: Auto Gauge	No
Tank Release Detection:Tank Tightness	No
Tank Release Detection: Vapor Monitor	No
Tank Release Detection: Inventory	No
Tank Release Detection: Stat Invent Recon	No
Tank Release Detection: Spill Install	No
Tank Release Detection: Overfill Install	No
Tank Release Detection: Groundwater	Yes
Tank Release Detection: Int Sec Containment	No
Tank Release Detection: Int Double Walled	No
Tank Release Detection: Other Method	No
Tank Release Detection: Other Note	Not reported
Pipe Release Detection: Leak Deferred	Not reported
Pipe Release Detection: Autoleak	Not reported
Pipe Release Detection: Line Tightness	No
Pipe Release Detection: Stat Invent Recon	No
Pipe Release Detection: Groundwater	No
Pipe Release Detection: Int Sec Containment	No
Pipe Release Det: Interior Double Walled	No
Pipe Release Detection: Other Method	No
Pipe Release Detection: Other Note	Not reported

Pipe Type:	NO VALVE SUCTION
Pipe Materials: Bare Steel	No
Pipe Materials: Galvanized Steel	Yes
Pipe Materials: Copper	No
Pipe Materials: Fiberglass	No
Pipe Materials: Cath Protect	No
Pipe Materials: Double Walled	No
Pipe Materials: Sec Containment	No
Pipe Materials: Repaired	No
Pipe Materials: Unknown	No
Pipe Materials: Other	No
Pipe Materials: Other Note	Not reported

Facility ID:	5011072
Federally Regulated:	Yes
Tank Number:	R3

ED BLAKES BP (Continued) **U003690725**

Tank Capacity:	4000
Tank Contents:	GASOLINE
Tank Status:	**REM FROM GRD**
Tank Type:	UST

Tank Material:

Install Date:	4/29/1977
Tank Materials: Bare Steel	Yes
Tank Materials: Cath Protect Steel	No
Tank Materials: Epoxy Steel	No
Tank Materials: Fiberglass	No
Tank Materials: Concrete	No
Tank Materials: Composite	No
Tank Materials: Double Walled	No
Tank Materials: Lined Interior	No
Tank Materials: Excav Liner	No
Tank Materials: Insulated Tank Jacket	No
Tank Materials: Repaired	No
Tank Materials: Unknown	No
Tank Materials: Other	No
Tank Materials: Other Note	Not reported

Release Detection:

Tank Release Detection: Leak Deferred	No
Tank Release Detection: Manual Gauge	No
Tank Release Detection: Auto Gauge	No
Tank Release Detection:Tank Tightness	No
Tank Release Detection: Vapor Monitor	No
Tank Release Detection: Inventory	No
Tank Release Detection: Stat Invent Recon	No
Tank Release Detection: Spill Install	No
Tank Release Detection: Overfill Install	No
Tank Release Detection: Groundwater	Yes
Tank Release Detection: Int Sec Containment	No
Tank Release Detection: Int Double Walled	No
Tank Release Detection: Other Method	No
Tank Release Detection: Other Note	Not reported
Pipe Release Detection: Leak Deferred	Not reported
Pipe Release Detection: Autoleak	Not reported
Pipe Release Detection: Line Tightness	No
Pipe Release Detection: Stat Invent Recon	No
Pipe Release Detection: Groundwater	No
Pipe Release Detection: Int Sec Containment	No
Pipe Release Det: Interior Double Walled	No
Pipe Release Detection: Other Method	No
Pipe Release Detection: Other Note	Not reported

Pipe Type:	NO VALVE SUCTION
Pipe Materials: Bare Steel	No
Pipe Materials: Galvanized Steel	Yes
Pipe Materials: Copper	No
Pipe Materials: Fiberglass	No
Pipe Materials: Cath Protect	No
Pipe Materials: Double Walled	No
Pipe Materials: Sec Containment	No
Pipe Materials: Repaired	No
Pipe Materials: Unknown	No

ED BLAKES BP (Continued) **U003690725**

Pipe Materials: Other	No
Pipe Materials: Other Note	Not reported
Facility ID:	5011072
Federally Regulated:	Yes
Tank Number:	R4
Tank Capacity:	1000
Tank Contents:	KEROSENE
Tank Status:	**REM FROM GRD**
Tank Type:	UST
Tank Material:	
Install Date:	4/29/1977
Tank Materials: Bare Steel	Yes
Tank Materials: Cath Protect Steel	No
Tank Materials: Epoxy Steel	No
Tank Materials: Fiberglass	No
Tank Materials: Concrete	No
Tank Materials: Composite	No
Tank Materials: Double Walled	No
Tank Materials: Lined Interior	No
Tank Materials: Excav Liner	No
Tank Materials: Insulated Tank Jacket	No
Tank Materials: Repaired	No
Tank Materials: Unknown	No
Tank Materials: Other	No
Tank Materials: Other Note	Not reported
Release Detection:	
Tank Release Detection: Leak Deferred	No
Tank Release Detection: Manual Gauge	No
Tank Release Detection: Auto Gauge	No
Tank Release Detection:Tank Tightness	No
Tank Release Detection: Vapor Monitor	No
Tank Release Detection: Inventory	No
Tank Release Detection: Stat Invent Recon	No
Tank Release Detection: Spill Install	No
Tank Release Detection: Overfill Install	No
Tank Release Detection: Groundwater	No
Tank Release Detection: Int Sec Containment	No
Tank Release Detection: Int Double Walled	No
Tank Release Detection: Other Method	No
Tank Release Detection: Other Note	Not reported
Pipe Release Detection: Leak Deferred	Not reported
Pipe Release Detection: Autoleak	Not reported
Pipe Release Detection: Line Tightness	No
Pipe Release Detection: Stat Invent Recon	No
Pipe Release Detection: Groundwater	No
Pipe Release Detection: Int Sec Containment	No
Pipe Release Det: Interior Double Walled	No
Pipe Release Detection: Other Method	No
Pipe Release Detection: Other Note	Not reported
Pipe Type:	UNKNOWN
Pipe Materials: Bare Steel	No

ED BLAKES BP (Continued) **U003690725**

Pipe Materials: Galvanized Steel	Yes
Pipe Materials: Copper	No
Pipe Materials: Fiberglass	No
Pipe Materials: Cath Protect	No
Pipe Materials: Double Walled	No
Pipe Materials: Sec Containment	No
Pipe Materials: Repaired	No
Pipe Materials: Unknown	No
Pipe Materials: Other	No
Pipe Materials: Other Note	Not reported

Facility ID:	5011072
Federally Regulated:	Yes

Tank Number:	R5
Tank Capacity:	1000
Tank Contents:	DIESEL
Tank Status:	**REM FROM GRD**
Tank Type:	UST

Tank Material:

Install Date:	4/29/1977
Tank Materials: Bare Steel	Yes
Tank Materials: Cath Protect Steel	No
Tank Materials: Epoxy Steel	No
Tank Materials: Fiberglass	No
Tank Materials: Concrete	No
Tank Materials: Composite	No
Tank Materials: Double Walled	No
Tank Materials: Lined Interior	No
Tank Materials: Excav Liner	No
Tank Materials: Insulated Tank Jacket	No
Tank Materials: Repaired	No
Tank Materials: Unknown	No
Tank Materials: Other	No
Tank Materials: Other Note	Not reported

Release Detection:

Tank Release Detection: Leak Deferred	No
Tank Release Detection: Manual Gauge	No
Tank Release Detection: Auto Gauge	No
Tank Release Detection:Tank Tightness	No
Tank Release Detection: Vapor Monitor	No
Tank Release Detection: Inventory	No
Tank Release Detection: Stat Invent Recon	No
Tank Release Detection: Spill Install	No
Tank Release Detection: Overfill Install	No
Tank Release Detection: Groundwater	No
Tank Release Detection: Int Sec Containment	No
Tank Release Detection: Int Double Walled	No
Tank Release Detection: Other Method	No
Tank Release Detection: Other Note	Not reported
Pipe Release Detection: Leak Deferred	Not reported
Pipe Release Detection: Autoleak	Not reported
Pipe Release Detection: Line Tightness	No
Pipe Release Detection: Stat Invent Recon	No

ED BLAKES BP (Continued) **U003690725**

Pipe Release Detection: Groundwater	No
Pipe Release Detection: Int Sec Containment	No
Pipe Release Det: Interior Double Walled	No
Pipe Release Detection: Other Method	No
Pipe Release Detection: Other Note	Not reported
Pipe Type:	UNKNOWN
Pipe Materials: Bare Steel	No
Pipe Materials: Galvanized Steel	Yes
Pipe Materials: Copper	No
Pipe Materials: Fiberglass	No
Pipe Materials: Cath Protect	No
Pipe Materials: Double Walled	No
Pipe Materials: Sec Containment	No
Pipe Materials: Repaired	No
Pipe Materials: Unknown	No
Pipe Materials: Other	No
Pipe Materials: Other Note	Not reported

B6 **CROCKETT REALTY** **LUST** **U003692902**
North **155 MARKET STREET** **LTANKS** **N/A**
1/8-1/4 **ONANCOCK, VA 23417** **UST**
0.186 mi.
983 ft. **Site 2 of 2 in cluster B**

Relative:
Higher

Actual:
19 ft.

LUST REG TD:

Region:	TD
Region Code:	TRO
Facility ID:	200000064721
Facility Status:	**Closed**
Completed Date:	09/20/1996
Pollution Complaint Num:	19972268
Fed Regulated Tank:	No
Phase Code:	RR
Event Description:	Release Reported
Comments:	FUEL OVERFLOWED FROM UNCAPPED FILL PORT DURING STORM.
Region:	TD
Region Code:	TRO
Facility ID:	200000064721
Facility Status:	**Closed**
Completed Date:	11/08/1996
Pollution Complaint Num:	19972268
Fed Regulated Tank:	No
Phase Code:	CLOSURE
Event Description:	Case Closure Date - Letter Sent
Comments:	CASE CLOSED. MINIMAL RELEASE W/VERY MINOR IMPACT TO ENVIRONMENT.

LTANKS:

Name:	CROCKETT REALTY
Address:	155 MARKET STREET
City,State,Zip:	ONANCOCK, VA 23417
City,State,Zip:	ONANCOCK, VA 23417
Region:	TRO
CEDS Facility Id:	200000064721
Case Status:	**Closed**

CROCKETT REALTY (Continued) **U003692902**

Pollution Complaint #:	19972268
Reported:	09/20/1996
Case Closed Date:	11/08/1996
Program:	RP Lead
Federally Regulated UST (Y/N):	N
Regulated Petroleum UST (1):	N
Excluded UST (1):	N
Deferred UST (1):	N
Partially Deferred UST (1):	N
Exempt 1 UST (2):	N
Exempt 2 Heating Oil UST (2):	Y
Small Heating Oil AST (2):	N
Regulated AST (3):	N
Unregulated AST (3):	N
Other Y/N:	N
Unknown Y/N:	N
Other Description:	Not reported
Heating Oil Category:	NFA

Facility:

Name:	CROCKETT REALTY
Address:	155 MARKET STREET
City,State,Zip:	ONANCOCK, VA 23417
Facility Id:	5027871
Facility Type:	COMMERCIAL
CEDS Facility ID:	200000064721

Owner:

Owner Id:	37613
Owner Name:	COALITION AGAINST DOMESTIC VIOLE
Owner Address:	28296 BOBTOWN ROAD
Owner Address2:	Not reported
Owner City, State, Zip:	MELFA, VA 23410
Owner Type:	COMMERCIAL
Number of Active AST:	0
Number of Active UST:	0
Number of Inactive AST:	0
Number of Inactive UST:	1

UST:

Facility ID:	5027871
Federally Regulated:	No
Tank Number:	R1
Tank Capacity:	Not reported
Tank Contents:	HEATING OIL
Tank Status:	**REM FROM GRD**
Tank Type:	UST

Tank Material:

Install Date:	Not reported
Tank Materials: Bare Steel	No
Tank Materials: Cath Protect Steel	No
Tank Materials: Epoxy Steel	No
Tank Materials: Fiberglass	No
Tank Materials: Concrete	No
Tank Materials: Composite	No

CROCKETT REALTY (Continued) **U003692902**

Tank Materials: Double Walled	No
Tank Materials: Lined Interior	No
Tank Materials: Excav Liner	No
Tank Materials: Insulated Tank Jacket	No
Tank Materials: Repaired	No
Tank Materials: Unknown	No
Tank Materials: Other	No
Tank Materials: Other Note	Not reported

Release Detection:

Tank Release Detection: Leak Deferred	No
Tank Release Detection: Manual Gauge	No
Tank Release Detection: Auto Gauge	No
Tank Release Detection:Tank Tightness	No
Tank Release Detection: Vapor Monitor	No
Tank Release Detection: Inventory	No
Tank Release Detection: Stat Invent Recon	No
Tank Release Detection: Spill Install	No
Tank Release Detection: Overfill Install	No
Tank Release Detection: Groundwater	No
Tank Release Detection: Int Sec Containment	No
Tank Release Detection: Int Double Walled	No
Tank Release Detection: Other Method	No
Tank Release Detection: Other Note	Not reported
Pipe Release Detection: Leak Deferred	Not reported
Pipe Release Detection: Autoleak	Not reported
Pipe Release Detection: Line Tightness	No
Pipe Release Detection: Stat Invent Recon	No
Pipe Release Detection: Groundwater	No
Pipe Release Detection: Int Sec Containment	No
Pipe Release Det: Interior Double Walled	No
Pipe Release Detection: Other Method	No
Pipe Release Detection: Other Note	Not reported

Pipe Type:	UNKNOWN
Pipe Materials: Bare Steel	No
Pipe Materials: Galvanized Steel	No
Pipe Materials: Copper	No
Pipe Materials: Fiberglass	No
Pipe Materials: Cath Protect	No
Pipe Materials: Double Walled	No
Pipe Materials: Sec Containment	No
Pipe Materials: Repaired	No
Pipe Materials: Unknown	No
Pipe Materials: Other	No
Pipe Materials: Other Note	Not reported

7 NNW 1/8-1/4 0.189 mi. 996 ft. | **DONALD BELOTE**
132 MARKET ST
ONANCOCK, VA 23417 | **UST** | **U003690400**
N/A

Relative: Higher

Actual: 19 ft.

Facility:

Name:	DONALD BELOTE
Address:	132 MARKET ST
City,State,Zip:	ONANCOCK, VA 23417
Facility Id:	5009619
Facility Type:	UNKNOWN
CEDS Facility ID:	200000090957

Owner:

Owner Id:	38979
Owner Name:	DONALD BELOTE T/A SW BELOTE & SON
Owner Address:	Not reported
Owner Address2:	Not reported
Owner City, State, Zip:	Not reported
Owner Type:	Not reported
Number of Active AST:	0
Number of Active UST:	0
Number of Inactive AST:	0
Number of Inactive UST:	2

UST:

Facility ID:	5009619
Federally Regulated:	Yes
Tank Number:	1
Tank Capacity:	1000
Tank Contents:	GASOLINE
Tank Status:	**PERM OUT OF USE**
Tank Type:	UST

Tank Material:

Install Date:	6/9/1984
Tank Materials: Bare Steel	Yes
Tank Materials: Cath Protect Steel	No
Tank Materials: Epoxy Steel	No
Tank Materials: Fiberglass	No
Tank Materials: Concrete	No
Tank Materials: Composite	No
Tank Materials: Double Walled	No
Tank Materials: Lined Interior	No
Tank Materials: Excav Liner	No
Tank Materials: Insulated Tank Jacket	No
Tank Materials: Repaired	No
Tank Materials: Unknown	No
Tank Materials: Other	No
Tank Materials: Other Note	Not reported

Release Detection:

Tank Release Detection: Leak Deferred	No
Tank Release Detection: Manual Gauge	No
Tank Release Detection: Auto Gauge	No
Tank Release Detection:Tank Tightness	No
Tank Release Detection: Vapor Monitor	No

DONALD BELOTE (Continued) **U003690400**

Tank Release Detection: Inventory	No
Tank Release Detection: Stat Invent Recon	No
Tank Release Detection: Spill Install	No
Tank Release Detection: Overfill Install	No
Tank Release Detection: Groundwater	No
Tank Release Detection: Int Sec Containment	No
Tank Release Detection: Int Double Walled	No
Tank Release Detection: Other Method	No
Tank Release Detection: Other Note	Not reported
Pipe Release Detection: Leak Deferred	Not reported
Pipe Release Detection: Autoleak	Not reported
Pipe Release Detection: Line Tightness	No
Pipe Release Detection: Stat Invent Recon	No
Pipe Release Detection: Groundwater	No
Pipe Release Detection: Int Sec Containment	No
Pipe Release Det: Interior Double Walled	No
Pipe Release Detection: Other Method	No
Pipe Release Detection: Other Note	Not reported
Pipe Type:	UNKNOWN
Pipe Materials: Bare Steel	No
Pipe Materials: Galvanized Steel	Yes
Pipe Materials: Copper	No
Pipe Materials: Fiberglass	No
Pipe Materials: Cath Protect	No
Pipe Materials: Double Walled	No
Pipe Materials: Sec Containment	No
Pipe Materials: Repaired	No
Pipe Materials: Unknown	No
Pipe Materials: Other	No
Pipe Materials: Other Note	Not reported
Facility ID:	5009619
Federally Regulated:	Yes
Tank Number:	2
Tank Capacity:	550
Tank Contents:	GASOLINE
Tank Status:	**PERM OUT OF USE**
Tank Type:	UST

Tank Material:

Install Date:	6/10/1983
Tank Materials: Bare Steel	Yes
Tank Materials: Cath Protect Steel	No
Tank Materials: Epoxy Steel	No
Tank Materials: Fiberglass	No
Tank Materials: Concrete	No
Tank Materials: Composite	No
Tank Materials: Double Walled	No
Tank Materials: Lined Interior	No
Tank Materials: Excav Liner	No
Tank Materials: Insulated Tank Jacket	No
Tank Materials: Repaired	No
Tank Materials: Unknown	No
Tank Materials: Other	No
Tank Materials: Other Note	Not reported

DONALD BELOTE (Continued) **U003690400**

Release Detection:

Tank Release Detection: Leak Deferred	No
Tank Release Detection: Manual Gauge	No
Tank Release Detection: Auto Gauge	No
Tank Release Detection:Tank Tightness	No
Tank Release Detection: Vapor Monitor	No
Tank Release Detection: Inventory	No
Tank Release Detection: Stat Invent Recon	No
Tank Release Detection: Spill Install	No
Tank Release Detection: Overfill Install	No
Tank Release Detection: Groundwater	No
Tank Release Detection: Int Sec Containment	No
Tank Release Detection: Int Double Walled	No
Tank Release Detection: Other Method	No
Tank Release Detection: Other Note	Not reported
Pipe Release Detection: Leak Deferred	Not reported
Pipe Release Detection: Autoleak	Not reported
Pipe Release Detection: Line Tightness	No
Pipe Release Detection: Stat Invent Recon	No
Pipe Release Detection: Groundwater	No
Pipe Release Detection: Int Sec Containment	No
Pipe Release Det: Interior Double Walled	No
Pipe Release Detection: Other Method	No
Pipe Release Detection: Other Note	Not reported

Pipe Type:	UNKNOWN
Pipe Materials: Bare Steel	No
Pipe Materials: Galvanized Steel	Yes
Pipe Materials: Copper	No
Pipe Materials: Fiberglass	No
Pipe Materials: Cath Protect	No
Pipe Materials: Double Walled	No
Pipe Materials: Sec Containment	No
Pipe Materials: Repaired	No
Pipe Materials: Unknown	No
Pipe Materials: Other	No
Pipe Materials: Other Note	Not reported

C8 **PROSPECT CORP LLC PROPERTY** **LTANKS** **S120835581**
NW **116 MARKET ST** **N/A**
1/8-1/4 **ONANCOCK, VA 23417**
0.246 mi.
1298 ft. **Site 1 of 3 in cluster C**

Relative:
Higher

Actual:
19 ft.

LTANKS:

Name:	PROSPECT CORP LLC PROPERTY
Address:	116 MARKET ST
City,State,Zip:	ONANCOCK, VA 23417
City,State,Zip:	ONANCOCK, VA 23417
Region:	TRO
CEDS Facility Id:	200000884442
Case Status:	**Closed**
Pollution Complaint #:	20175207
Reported:	02/16/2017
Case Closed Date:	03/17/2017
Program:	RP Lead

PROSPECT CORP LLC PROPERTY (Continued) **S120835581**

Federally Regulated UST (Y/N):	N
Regulated Petroleum UST (1):	N
Excluded UST (1):	N
Deferred UST (1):	N
Partially Deferred UST (1):	N
Exempt 1 UST (2):	N
Exempt 2 Heating Oil UST (2):	Y
Small Heating Oil AST (2):	N
Regulated AST (3):	N
Unregulated AST (3):	N
Other Y/N:	N
Unknown Y/N:	N
Other Description:	Not reported
Heating Oil Category:	Category 1

C9 **E&C ENTERPRISES INC VA-605** **UST** **U003690388**
NW **114 MARKET ST** **Financial Assurance** **N/A**
1/8-1/4 **ONANCOCK, VA 23417**
0.248 mi.
1309 ft. **Site 2 of 3 in cluster C**

Relative:
Higher

Actual:
19 ft.

Facility:

Name:	E&C ENTERPRISES INC VA-605
Address:	114 MARKET ST
City,State,Zip:	ONANCOCK, VA 23417
Facility Id:	5009606
Facility Type:	GAS STATION
CEDS Facility ID:	200000066439

Owner:

Owner Id:	43340
Owner Name:	P&E Inc
Owner Address:	2900 Telestar Ct
Owner Address2:	Not reported
Owner City, State, Zip:	Falls Church, VA 22042
Owner Type:	COMMERCIAL
Number of Active AST:	0
Number of Active UST:	3
Number of Inactive AST:	0
Number of Inactive UST:	5

Owner Id:	36996
Owner Name:	Bagwell Oil Company Inc
Owner Address:	33 Market St
Owner Address2:	Not reported
Owner City, State, Zip:	Onancock, VA 23417
Owner Type:	COMMERCIAL
Number of Active AST:	0
Number of Active UST:	3
Number of Inactive AST:	0
Number of Inactive UST:	5

UST:

Facility ID:	5009606
Federally Regulated:	Yes
Tank Number:	1
Tank Capacity:	12000

E&C ENTERPRISES INC VA-605 (Continued) **U003690388**

Tank Contents:	GASOLINE REGULAR
Tank Status:	**CURR IN USE**
Tank Type:	UST
Tank Material:	
Install Date:	3/1/1995
Tank Materials: Bare Steel	No
Tank Materials: Cath Protect Steel	No
Tank Materials: Epoxy Steel	No
Tank Materials: Fiberglass	No
Tank Materials: Concrete	No
Tank Materials: Composite	Yes
Tank Materials: Double Walled	No
Tank Materials: Lined Interior	No
Tank Materials: Excav Liner	No
Tank Materials: Insulated Tank Jacket	No
Tank Materials: Repaired	No
Tank Materials: Unknown	No
Tank Materials: Other	No
Tank Materials: Other Note	Not reported
Release Detection:	
Tank Release Detection: Leak Deferred	No
Tank Release Detection: Manual Gauge	No
Tank Release Detection: Auto Gauge	Yes
Tank Release Detection:Tank Tightness	No
Tank Release Detection: Vapor Monitor	No
Tank Release Detection: Inventory	No
Tank Release Detection: Stat Invent Recon	Yes
Tank Release Detection: Spill Install	Yes
Tank Release Detection: Overfill Install	Not reported
Tank Release Detection: Groundwater	No
Tank Release Detection: Int Sec Containment	No
Tank Release Detection: Int Double Walled	No
Tank Release Detection: Other Method	No
Tank Release Detection: Other Note	Used groundwater until Jul 06
Pipe Release Detection: Leak Deferred	Not reported
Pipe Release Detection: Autoleak	Not reported
Pipe Release Detection: Line Tightness	No
Pipe Release Detection: Stat Invent Recon	Yes
Pipe Release Detection: Groundwater	No
Pipe Release Detection: Int Sec Containment	No
Pipe Release Det: Interior Double Walled	No
Pipe Release Detection: Other Method	No
Pipe Release Detection: Other Note	Overfill Automatic Shutoff Valve (coaxial drop tube)
Pipe Type:	PRESSURE
Pipe Materials: Bare Steel	No
Pipe Materials: Galvanized Steel	No
Pipe Materials: Copper	No
Pipe Materials: Fiberglass	No
Pipe Materials: Cath Protect	No
Pipe Materials: Double Walled	Yes
Pipe Materials: Sec Containment	Yes
Pipe Materials: Repaired	No
Pipe Materials: Unknown	No
Pipe Materials: Other	Yes

E&C ENTERPRISES INC VA-605 (Continued) **U003690388**

Pipe Materials: Other Note	Polyflexible piping ENVIRON
Facility ID:	5009606
Federally Regulated:	Yes
Tank Number:	2C
Tank Capacity:	7000
Tank Contents:	GASOLINE PREMIUM
Tank Status:	**CURR IN USE**
Tank Type:	UST
Tank Material:	
Install Date:	3/1/1995
Tank Materials: Bare Steel	No
Tank Materials: Cath Protect Steel	No
Tank Materials: Epoxy Steel	No
Tank Materials: Fiberglass	No
Tank Materials: Concrete	No
Tank Materials: Composite	Yes
Tank Materials: Double Walled	No
Tank Materials: Lined Interior	No
Tank Materials: Excav Liner	No
Tank Materials: Insulated Tank Jacket	No
Tank Materials: Repaired	No
Tank Materials: Unknown	No
Tank Materials: Other	No
Tank Materials: Other Note	Not reported
Release Detection:	
Tank Release Detection: Leak Deferred	No
Tank Release Detection: Manual Gauge	No
Tank Release Detection: Auto Gauge	Yes
Tank Release Detection:Tank Tightness	No
Tank Release Detection: Vapor Monitor	No
Tank Release Detection: Inventory	No
Tank Release Detection: Stat Invent Recon	Yes
Tank Release Detection: Spill Install	Yes
Tank Release Detection: Overfill Install	Not reported
Tank Release Detection: Groundwater	No
Tank Release Detection: Int Sec Containment	No
Tank Release Detection: Int Double Walled	No
Tank Release Detection: Other Method	No
Tank Release Detection: Other Note	Used groundwater until Jul 06
Pipe Release Detection: Leak Deferred	Not reported
Pipe Release Detection: Autoleak	Not reported
Pipe Release Detection: Line Tightness	No
Pipe Release Detection: Stat Invent Recon	Yes
Pipe Release Detection: Groundwater	No
Pipe Release Detection: Int Sec Containment	No
Pipe Release Det: Interior Double Walled	No
Pipe Release Detection: Other Method	No
Pipe Release Detection: Other Note	Overfill Automatic Shutoff new dry break 11/06
Pipe Type:	PRESSURE
Pipe Materials: Bare Steel	No
Pipe Materials: Galvanized Steel	No

E&C ENTERPRISES INC VA-605 (Continued) **U003690388**

Pipe Materials: Copper	No
Pipe Materials: Fiberglass	No
Pipe Materials: Cath Protect	No
Pipe Materials: Double Walled	Yes
Pipe Materials: Sec Containment	Yes
Pipe Materials: Repaired	No
Pipe Materials: Unknown	No
Pipe Materials: Other	Yes
Pipe Materials: Other Note	Ployflexible piping ENVIRON

Facility ID:	5009606
Federally Regulated:	Yes

Tank Number:	3C
Tank Capacity:	3000
Tank Contents:	DIESEL ULTRA LOW SULFUR
Tank Status:	**CURR IN USE**
Tank Type:	UST

Tank Material:

Install Date:	3/1/1995
Tank Materials: Bare Steel	No
Tank Materials: Cath Protect Steel	No
Tank Materials: Epoxy Steel	No
Tank Materials: Fiberglass	No
Tank Materials: Concrete	No
Tank Materials: Composite	Yes
Tank Materials: Double Walled	No
Tank Materials: Lined Interior	No
Tank Materials: Excav Liner	No
Tank Materials: Insulated Tank Jacket	No
Tank Materials: Repaired	No
Tank Materials: Unknown	No
Tank Materials: Other	No
Tank Materials: Other Note	Not reported

Release Detection:

Tank Release Detection: Leak Deferred	No
Tank Release Detection: Manual Gauge	No
Tank Release Detection: Auto Gauge	Yes
Tank Release Detection:Tank Tightness	No
Tank Release Detection: Vapor Monitor	No
Tank Release Detection: Inventory	No
Tank Release Detection: Stat Invent Recon	Yes
Tank Release Detection: Spill Install	Yes
Tank Release Detection: Overfill Install	Not reported
Tank Release Detection: Groundwater	No
Tank Release Detection: Int Sec Containment	No
Tank Release Detection: Int Double Walled	No
Tank Release Detection: Other Method	No
Tank Release Detection: Other Note	Used groundwater until Jul 06
Pipe Release Detection: Leak Deferred	Not reported
Pipe Release Detection: Autoleak	Not reported
Pipe Release Detection: Line Tightness	No
Pipe Release Detection: Stat Invent Recon	Yes
Pipe Release Detection: Groundwater	No

E&C ENTERPRISES INC VA-605 (Continued) **U003690388**

Pipe Release Detection: Int Sec Containment	No
Pipe Release Det: Interior Double Walled	No
Pipe Release Detection: Other Method	No
Pipe Release Detection: Other Note	Overfill Automatic Shutoff Valve
Pipe Type:	PRESSURE
Pipe Materials: Bare Steel	No
Pipe Materials: Galvanized Steel	No
Pipe Materials: Copper	No
Pipe Materials: Fiberglass	No
Pipe Materials: Cath Protect	No
Pipe Materials: Double Walled	Yes
Pipe Materials: Sec Containment	Yes
Pipe Materials: Repaired	No
Pipe Materials: Unknown	No
Pipe Materials: Other	Yes
Pipe Materials: Other Note	Polyflexible piping ENVIRON
Facility ID:	5009606
Federally Regulated:	Yes
Tank Number:	R1
Tank Capacity:	6000
Tank Contents:	GASOLINE
Tank Status:	**REM FROM GRD**
Tank Type:	UST

Tank Material:

Install Date:	7/1/1983
Tank Materials: Bare Steel	Yes
Tank Materials: Cath Protect Steel	No
Tank Materials: Epoxy Steel	No
Tank Materials: Fiberglass	No
Tank Materials: Concrete	No
Tank Materials: Composite	No
Tank Materials: Double Walled	No
Tank Materials: Lined Interior	No
Tank Materials: Excav Liner	No
Tank Materials: Insulated Tank Jacket	No
Tank Materials: Repaired	No
Tank Materials: Unknown	No
Tank Materials: Other	No
Tank Materials: Other Note	Not reported

Release Detection:

Tank Release Detection: Leak Deferred	No
Tank Release Detection: Manual Gauge	No
Tank Release Detection: Auto Gauge	No
Tank Release Detection:Tank Tightness	No
Tank Release Detection: Vapor Monitor	No
Tank Release Detection: Inventory	No
Tank Release Detection: Stat Invent Recon	No
Tank Release Detection: Spill Install	No
Tank Release Detection: Overfill Install	No
Tank Release Detection: Groundwater	No
Tank Release Detection: Int Sec Containment	No

E&C ENTERPRISES INC VA-605 (Continued) **U003690388**

Tank Release Detection: Int Double Walled	No
Tank Release Detection: Other Method	No
Tank Release Detection: Other Note	Not reported
Pipe Release Detection: Leak Deferred	Not reported
Pipe Release Detection: Autoleak	Not reported
Pipe Release Detection: Line Tightness	No
Pipe Release Detection: Stat Invent Recon	No
Pipe Release Detection: Groundwater	No
Pipe Release Detection: Int Sec Containment	No
Pipe Release Det: Interior Double Walled	No
Pipe Release Detection: Other Method	No
Pipe Release Detection: Other Note	Not reported
Pipe Type:	UNKNOWN
Pipe Materials: Bare Steel	No
Pipe Materials: Galvanized Steel	Yes
Pipe Materials: Copper	No
Pipe Materials: Fiberglass	No
Pipe Materials: Cath Protect	No
Pipe Materials: Double Walled	No
Pipe Materials: Sec Containment	No
Pipe Materials: Repaired	No
Pipe Materials: Unknown	No
Pipe Materials: Other	No
Pipe Materials: Other Note	Not reported
Facility ID:	5009606
Federally Regulated:	Yes
Tank Number:	R2
Tank Capacity:	4000
Tank Contents:	GASOLINE
Tank Status:	**REM FROM GRD**
Tank Type:	UST
Tank Material:	
Install Date:	7/1/1983
Tank Materials: Bare Steel	Yes
Tank Materials: Cath Protect Steel	No
Tank Materials: Epoxy Steel	No
Tank Materials: Fiberglass	No
Tank Materials: Concrete	No
Tank Materials: Composite	No
Tank Materials: Double Walled	No
Tank Materials: Lined Interior	No
Tank Materials: Excav Liner	No
Tank Materials: Insulated Tank Jacket	No
Tank Materials: Repaired	No
Tank Materials: Unknown	No
Tank Materials: Other	No
Tank Materials: Other Note	Not reported
Release Detection:	
Tank Release Detection: Leak Deferred	No
Tank Release Detection: Manual Gauge	No
Tank Release Detection: Auto Gauge	No

E&C ENTERPRISES INC VA-605 (Continued) **U003690388**

Tank Release Detection:Tank Tightness	No
Tank Release Detection: Vapor Monitor	No
Tank Release Detection: Inventory	No
Tank Release Detection: Stat Invent Recon	No
Tank Release Detection: Spill Install	No
Tank Release Detection: Overfill Install	No
Tank Release Detection: Groundwater	No
Tank Release Detection: Int Sec Containment	No
Tank Release Detection: Int Double Walled	No
Tank Release Detection: Other Method	No
Tank Release Detection: Other Note	Not reported
Pipe Release Detection: Leak Deferred	Not reported
Pipe Release Detection: Autoleak	Not reported
Pipe Release Detection: Line Tightness	No
Pipe Release Detection: Stat Invent Recon	No
Pipe Release Detection: Groundwater	No
Pipe Release Detection: Int Sec Containment	No
Pipe Release Det: Interior Double Walled	No
Pipe Release Detection: Other Method	No
Pipe Release Detection: Other Note	Not reported
Pipe Type:	UNKNOWN
Pipe Materials: Bare Steel	No
Pipe Materials: Galvanized Steel	Yes
Pipe Materials: Copper	No
Pipe Materials: Fiberglass	No
Pipe Materials: Cath Protect	No
Pipe Materials: Double Walled	No
Pipe Materials: Sec Containment	No
Pipe Materials: Repaired	No
Pipe Materials: Unknown	No
Pipe Materials: Other	No
Pipe Materials: Other Note	Not reported
Facility ID:	5009606
Federally Regulated:	Yes
Tank Number:	R3
Tank Capacity:	3000
Tank Contents:	GASOLINE
Tank Status:	**REM FROM GRD**
Tank Type:	UST

Tank Material:

Install Date:	7/1/1983
Tank Materials: Bare Steel	Yes
Tank Materials: Cath Protect Steel	No
Tank Materials: Epoxy Steel	No
Tank Materials: Fiberglass	No
Tank Materials: Concrete	No
Tank Materials: Composite	No
Tank Materials: Double Walled	No
Tank Materials: Lined Interior	No
Tank Materials: Excav Liner	No
Tank Materials: Insulated Tank Jacket	No
Tank Materials: Repaired	No
Tank Materials: Unknown	No

E&C ENTERPRISES INC VA-605 (Continued) **U003690388**

Tank Materials: Other	No
Tank Materials: Other Note	Not reported

Release Detection:

Tank Release Detection: Leak Deferred	No
Tank Release Detection: Manual Gauge	No
Tank Release Detection: Auto Gauge	No
Tank Release Detection:Tank Tightness	No
Tank Release Detection: Vapor Monitor	No
Tank Release Detection: Inventory	No
Tank Release Detection: Stat Invent Recon	No
Tank Release Detection: Spill Install	No
Tank Release Detection: Overfill Install	No
Tank Release Detection: Groundwater	No
Tank Release Detection: Int Sec Containment	No
Tank Release Detection: Int Double Walled	No
Tank Release Detection: Other Method	No
Tank Release Detection: Other Note	Not reported
Pipe Release Detection: Leak Deferred	Not reported
Pipe Release Detection: Autoleak	Not reported
Pipe Release Detection: Line Tightness	No
Pipe Release Detection: Stat Invent Recon	No
Pipe Release Detection: Groundwater	No
Pipe Release Detection: Int Sec Containment	No
Pipe Release Det: Interior Double Walled	No
Pipe Release Detection: Other Method	No
Pipe Release Detection: Other Note	Not reported
Pipe Type:	UNKNOWN
Pipe Materials: Bare Steel	No
Pipe Materials: Galvanized Steel	Yes
Pipe Materials: Copper	No
Pipe Materials: Fiberglass	No
Pipe Materials: Cath Protect	No
Pipe Materials: Double Walled	No
Pipe Materials: Sec Containment	No
Pipe Materials: Repaired	No
Pipe Materials: Unknown	No
Pipe Materials: Other	No
Pipe Materials: Other Note	Not reported
Facility ID:	5009606
Federally Regulated:	Yes
Tank Number:	R4
Tank Capacity:	3000
Tank Contents:	GASOLINE
Tank Status:	**REM FROM GRD**
Tank Type:	UST

Tank Material:

Install Date:	7/1/1983
Tank Materials: Bare Steel	Yes
Tank Materials: Cath Protect Steel	No
Tank Materials: Epoxy Steel	No
Tank Materials: Fiberglass	No

E&C ENTERPRISES INC VA-605 (Continued) **U003690388**

Tank Materials: Concrete	No
Tank Materials: Composite	No
Tank Materials: Double Walled	No
Tank Materials: Lined Interior	No
Tank Materials: Excav Liner	No
Tank Materials: Insulated Tank Jacket	No
Tank Materials: Repaired	No
Tank Materials: Unknown	No
Tank Materials: Other	No
Tank Materials: Other Note	Not reported

Release Detection:

Tank Release Detection: Leak Deferred	No
Tank Release Detection: Manual Gauge	No
Tank Release Detection: Auto Gauge	No
Tank Release Detection:Tank Tightness	No
Tank Release Detection: Vapor Monitor	No
Tank Release Detection: Inventory	No
Tank Release Detection: Stat Invent Recon	No
Tank Release Detection: Spill Install	No
Tank Release Detection: Overfill Install	No
Tank Release Detection: Groundwater	No
Tank Release Detection: Int Sec Containment	No
Tank Release Detection: Int Double Walled	No
Tank Release Detection: Other Method	No
Tank Release Detection: Other Note	Not reported
Pipe Release Detection: Leak Deferred	Not reported
Pipe Release Detection: Autoleak	Not reported
Pipe Release Detection: Line Tightness	No
Pipe Release Detection: Stat Invent Recon	No
Pipe Release Detection: Groundwater	No
Pipe Release Detection: Int Sec Containment	No
Pipe Release Det: Interior Double Walled	No
Pipe Release Detection: Other Method	No
Pipe Release Detection: Other Note	Not reported

Pipe Type:	UNKNOWN
Pipe Materials: Bare Steel	No
Pipe Materials: Galvanized Steel	Yes
Pipe Materials: Copper	No
Pipe Materials: Fiberglass	No
Pipe Materials: Cath Protect	No
Pipe Materials: Double Walled	No
Pipe Materials: Sec Containment	No
Pipe Materials: Repaired	No
Pipe Materials: Unknown	No
Pipe Materials: Other	No
Pipe Materials: Other Note	Not reported

Facility ID:	5009606
Federally Regulated:	Yes
Tank Number:	R5
Tank Capacity:	1000
Tank Contents:	KEROSENE
Tank Status:	**REM FROM GRD**

E&C ENTERPRISES INC VA-605 (Continued) **U003690388**

Tank Type:	UST
Tank Material:	
Install Date:	7/1/1983
Tank Materials: Bare Steel	Yes
Tank Materials: Cath Protect Steel	No
Tank Materials: Epoxy Steel	No
Tank Materials: Fiberglass	No
Tank Materials: Concrete	No
Tank Materials: Composite	No
Tank Materials: Double Walled	No
Tank Materials: Lined Interior	No
Tank Materials: Excav Liner	No
Tank Materials: Insulated Tank Jacket	No
Tank Materials: Repaired	No
Tank Materials: Unknown	No
Tank Materials: Other	No
Tank Materials: Other Note	Not reported
Release Detection:	
Tank Release Detection: Leak Deferred	No
Tank Release Detection: Manual Gauge	Yes
Tank Release Detection: Auto Gauge	No
Tank Release Detection:Tank Tightness	No
Tank Release Detection: Vapor Monitor	No
Tank Release Detection: Inventory	No
Tank Release Detection: Stat Invent Recon	No
Tank Release Detection: Spill Install	No
Tank Release Detection: Overfill Install	No
Tank Release Detection: Groundwater	Yes
Tank Release Detection: Int Sec Containment	No
Tank Release Detection: Int Double Walled	No
Tank Release Detection: Other Method	No
Tank Release Detection: Other Note	Not reported
Pipe Release Detection: Leak Deferred	Not reported
Pipe Release Detection: Autoleak	Not reported
Pipe Release Detection: Line Tightness	No
Pipe Release Detection: Stat Invent Recon	No
Pipe Release Detection: Groundwater	Yes
Pipe Release Detection: Int Sec Containment	No
Pipe Release Det: Interior Double Walled	No
Pipe Release Detection: Other Method	No
Pipe Release Detection: Other Note	Not reported
Pipe Type:	NO VALVE SUCTION
Pipe Materials: Bare Steel	No
Pipe Materials: Galvanized Steel	Yes
Pipe Materials: Copper	No
Pipe Materials: Fiberglass	No
Pipe Materials: Cath Protect	No
Pipe Materials: Double Walled	No
Pipe Materials: Sec Containment	No
Pipe Materials: Repaired	No
Pipe Materials: Unknown	No
Pipe Materials: Other	No
Pipe Materials: Other Note	Not reported

E&C ENTERPRISES INC VA-605 (Continued) **U003690388**

VA Financial Assurance 1:

Name:	E&C ENTERPRISES INC VA-605
Address:	114 MARKET ST
Address 2:	Not reported
City,State,Zip:	ONANCOCK, VA 23417
Facility ID:	5009606
Owner Name:	P&E Inc
ROF Own Id:	43340
Tank Type:	UST
Mechanism:	Insurance
Gallonage:	Not reported
Per Occurence:	2000000
Third Party:	2000000
Annual Aggregate:	10000000
In Compliance:	Not reported
Total Capacity:	3000
CEDS Facility Name:	Onancock Corner Mart
Tank Status:	CURR IN USE
Active Federally Regualted UST:	Y

Name:	E&C ENTERPRISES INC VA-605
Address:	114 MARKET ST
Address 2:	Not reported
City,State,Zip:	ONANCOCK, VA 23417
Facility ID:	5009606
Owner Name:	P&E Inc
ROF Own Id:	43340
Tank Type:	UST
Mechanism:	Insurance
Gallonage:	Not reported
Per Occurence:	2000000
Third Party:	2000000
Annual Aggregate:	10000000
In Compliance:	Not reported
Total Capacity:	12000
CEDS Facility Name:	Onancock Corner Mart
Tank Status:	CURR IN USE
Active Federally Regualted UST:	Y

Name:	E&C ENTERPRISES INC VA-605
Address:	114 MARKET ST
Address 2:	Not reported
City,State,Zip:	ONANCOCK, VA 23417
Facility ID:	5009606
Owner Name:	P&E Inc
ROF Own Id:	43340
Tank Type:	UST
Mechanism:	Insurance
Gallonage:	Not reported
Per Occurence:	2000000
Third Party:	2000000
Annual Aggregate:	10000000
In Compliance:	Not reported
Total Capacity:	7000
CEDS Facility Name:	Onancock Corner Mart
Tank Status:	CURR IN USE
Active Federally Regualted UST:	Y

C10 NW 1/8-1/4 0.248 mi. 1309 ft. | **ONANCOCK CORNER MART**
114 MARKET ST
ONANCOCK, VA 23417

Site 3 of 3 in cluster C

LUST LTANKS | **S108106586 N/A**

Relative: Higher

Actual: 19 ft.

LUST REG TD:

Region:	TD
Region Code:	TRO
Facility ID:	200000066439
Facility Status:	**Closed**
Completed Date:	07/13/2006
Pollution Complaint Num:	20075003
Fed Regulated Tank:	Yes
Phase Code:	RR
Event Description:	Release Reported
Comments:	Release reported

Region:	TD
Region Code:	TRO
Facility ID:	200000066439
Facility Status:	**Closed**
Completed Date:	04/06/2007
Pollution Complaint Num:	20075003
Fed Regulated Tank:	Yes
Phase Code:	CLOSURE
Event Description:	Case Closure Date - Letter Sent
Comments:	Case closed, no further corrective action letter sent

LTANKS:

Name:	ONANCOCK CORNER MART
Address:	114 MARKET ST
City,State,Zip:	ONANCOCK, VA 23417
City,State,Zip:	ONANCOCK, VA 23417
Region:	TRO
CEDS Facility Id:	200000066439
Case Status:	**Closed**
Pollution Complaint #:	20075003
Reported:	07/13/2006
Case Closed Date:	04/06/2007
Program:	RP Lead
Federally Regulated UST (Y/N):	Y
Regulated Petroleum UST (1):	Y
Excluded UST (1):	N
Deferred UST (1):	N
Partially Deferred UST (1):	N
Exempt 1 UST (2):	N
Exempt 2 Heating Oil UST (2):	N
Small Heating Oil AST (2):	N
Regulated AST (3):	N
Unregulated AST (3):	N
Other Y/N:	N
Unknown Y/N:	N
Other Description:	Not reported
Heating Oil Category:	Not reported

D11 North 1/4-1/2 0.336 mi. 1775 ft. | **BELL ATLANTIC KERR & PINE STREET ONANCOCK, VA 23417** | **LUST LTANKS UST** | **U003917651 N/A**

Site 1 of 2 in cluster D

Relative: Higher

Actual: 21 ft.

LUST REG TD:

Region:	TD
Region Code:	TRO
Facility ID:	200000064150
Facility Status:	**Closed**
Completed Date:	07/17/1992
Pollution Complaint Num:	19930132
Fed Regulated Tank:	Yes
Phase Code:	RR
Event Description:	Release Reported
Comments:	Not reported

Region:	TD
Region Code:	TRO
Facility ID:	200000064150
Facility Status:	**Closed**
Completed Date:	02/09/1994
Pollution Complaint Num:	19930132
Fed Regulated Tank:	Yes
Phase Code:	CLOSURE
Event Description:	Case Closure Date - Letter Sent
Comments:	CASE CLOSED-NO FURTHER ACTION REQUIRED.

LTANKS:

Name:	BELL ATLANTIC
Address:	KERR & PINE STREET
City,State,Zip:	ONANCOCK, VA 23417
City,State,Zip:	ONANCOCK, VA 23417
Region:	TRO
CEDS Facility Id:	200000064150
Case Status:	**Closed**
Pollution Complaint #:	19930132
Reported:	07/17/1992
Case Closed Date:	02/09/1994
Program:	RP Lead
Federally Regulated UST (Y/N):	Y
Regulated Petroleum UST (1):	Y
Excluded UST (1):	N
Deferred UST (1):	N
Partially Deferred UST (1):	N
Exempt 1 UST (2):	N
Exempt 2 Heating Oil UST (2):	N
Small Heating Oil AST (2):	N
Regulated AST (3):	N
Unregulated AST (3):	N
Other Y/N:	N
Unknown Y/N:	N
Other Description:	Not reported
Heating Oil Category:	Not reported

Facility:

Name:	BELL ATLANTIC

BELL ATLANTIC (Continued) **U003917651**

Address:	KERR & PINE STREET
City,State,Zip:	ONANCOCK, VA 23417
Facility Id:	5005370
Facility Type:	UTILITY
CEDS Facility ID:	200000064150

Owner:

Owner Id:	31843
Owner Name:	Verizon Virginia LLC
Owner Address:	400 International Parkway
Owner Address2:	Not reported
Owner City, State, Zip:	Richardson, TX 75081
Owner Type:	COMMERCIAL
Number of Active AST:	0
Number of Active UST:	0
Number of Inactive AST:	0
Number of Inactive UST:	1

UST:

Facility ID:	5005370
Federally Regulated:	Yes
Tank Number:	1
Tank Capacity:	3000
Tank Contents:	GASOLINE
Tank Status:	**REM FROM GRD**
Tank Type:	UST

Tank Material:

Install Date:	3/14/1974
Tank Materials: Bare Steel	Yes
Tank Materials: Cath Protect Steel	No
Tank Materials: Epoxy Steel	No
Tank Materials: Fiberglass	No
Tank Materials: Concrete	No
Tank Materials: Composite	No
Tank Materials: Double Walled	No
Tank Materials: Lined Interior	No
Tank Materials: Excav Liner	No
Tank Materials: Insulated Tank Jacket	No
Tank Materials: Repaired	No
Tank Materials: Unknown	No
Tank Materials: Other	No
Tank Materials: Other Note	Not reported

Release Detection:

Tank Release Detection: Leak Deferred	No
Tank Release Detection: Manual Gauge	No
Tank Release Detection: Auto Gauge	No
Tank Release Detection:Tank Tightness	No
Tank Release Detection: Vapor Monitor	No
Tank Release Detection: Inventory	No
Tank Release Detection: Stat Invent Recon	No
Tank Release Detection: Spill Install	No
Tank Release Detection: Overfill Install	No
Tank Release Detection: Groundwater	No
Tank Release Detection: Int Sec Containment	No

BELL ATLANTIC (Continued) **U003917651**

Tank Release Detection: Int Double Walled	No
Tank Release Detection: Other Method	No
Tank Release Detection: Other Note	Not reported
Pipe Release Detection: Leak Deferred	Not reported
Pipe Release Detection: Autoleak	Not reported
Pipe Release Detection: Line Tightness	No
Pipe Release Detection: Stat Invent Recon	No
Pipe Release Detection: Groundwater	No
Pipe Release Detection: Int Sec Containment	No
Pipe Release Det: Interior Double Walled	No
Pipe Release Detection: Other Method	No
Pipe Release Detection: Other Note	Not reported
Pipe Type:	UNKNOWN
Pipe Materials: Bare Steel	No
Pipe Materials: Galvanized Steel	No
Pipe Materials: Copper	No
Pipe Materials: Fiberglass	No
Pipe Materials: Cath Protect	No
Pipe Materials: Double Walled	No
Pipe Materials: Sec Containment	No
Pipe Materials: Repaired	No
Pipe Materials: Unknown	Yes
Pipe Materials: Other	No
Pipe Materials: Other Note	Not reported

D12 **DMA - ONANCOCK ARMORY** **LUST** **S110068977**
North **67 KERR ST** **LTANKS** **N/A**
1/4-1/2 **ONANCOCK, VA 23417** **TIER 2**
0.354 mi.
1869 ft. **Site 2 of 2 in cluster D**

Relative:
Higher

Actual:
21 ft.

LUST REG TD:

Region:	TD
Region Code:	TRO
Facility ID:	200000223137
Facility Status:	**Closed**
Completed Date:	07/19/2010
Pollution Complaint Num:	20115001
Fed Regulated Tank:	No
Phase Code:	RR
Event Description:	Release Reported
Comments:	Release Reported
Region:	TD
Region Code:	TRO
Facility ID:	200000223137
Facility Status:	**Closed**
Completed Date:	10/17/2011
Pollution Complaint Num:	20115001
Fed Regulated Tank:	No
Phase Code:	CLOSURE
Event Description:	Case Closure Date - Letter Sent
Comments:	Case Closed

LTANKS:

DMA - ONANCOCK ARMORY (Continued) **S110068977**

Name:	ONANCOCK ARMORY
Address:	67 KERR ST
City,State,Zip:	ONANCOCK, VA 23417
City,State,Zip:	ONANCOCK, VA 23417
Region:	TRO
CEDS Facility Id:	200000223137
Case Status:	**Closed**
Pollution Complaint #:	20115001
Reported:	07/19/2010
Case Closed Date:	10/17/2011
Program:	RP Lead
Federally Regulated UST (Y/N):	N
Regulated Petroleum UST (1):	N
Excluded UST (1):	N
Deferred UST (1):	N
Partially Deferred UST (1):	N
Exempt 1 UST (2):	N
Exempt 2 Heating Oil UST (2):	Y
Small Heating Oil AST (2):	N
Regulated AST (3):	N
Unregulated AST (3):	N
Other Y/N:	N
Unknown Y/N:	N
Other Description:	Not reported
Heating Oil Category:	Category 3

TIER 2:

Name:	NATIONAL GUARD, ONANCOCK ARMORY
Address:	67 KERR ST
City,State,Zip:	ONANCOCK, VA 23417
Facility ID:	Not reported
CAS Number:	68476-30-2
SIC Code:	92811
NAICS:	Not reported
Entered Chemical Name:	#2 FUEL OIL
Average Amt Code:	4
Owner Name:	DEPT. OF MILITARY AFFAIRS
Owner Phone:	434-298-6455
Contact Type:	Not reported
Contact Information:	Not reported
Filing Year:	Not reported

Name:	NATIONAL GUARD ONANCOCK ARMORY
Address:	67 KERR STREET
City,State,Zip:	ONANCOCK, VA 23417
Facility ID:	Not reported
CAS Number:	68476-30-2
SIC Code:	Not reported
NAICS:	Not reported
Entered Chemical Name:	#2 Fuel Oil
Average Amt Code:	Not reported
Owner Name:	Department of Military Affairs
Owner Phone:	434-298-6445
Contact Type:	Not reported
Contact Information:	Not reported
Filing Year:	Not reported

13
NNW
1/4-1/2
0.410 mi.
2164 ft.

JER RENTALS LLC RESIDENTIAL PROPERTY
58 KERR ST
ONANCOCK, VA 23417

LTANKS **S118866551**
N/A

Relative:
Higher

Actual:
19 ft.

LTANKS:

Name:	JER RENTALS LLC RESIDENTIAL PROPERTY
Address:	58 KERR ST
City,State,Zip:	ONANCOCK, VA 23417
City,State,Zip:	ONANCOCK, VA 23417
Region:	TRO
CEDS Facility Id:	200000882676
Case Status:	**Closed**
Pollution Complaint #:	20165234
Reported:	05/23/2016
Case Closed Date:	08/24/2016
Program:	RP Lead
Federally Regulated UST (Y/N):	N
Regulated Petroleum UST (1):	N
Excluded UST (1):	N
Deferred UST (1):	N
Partially Deferred UST (1):	N
Exempt 1 UST (2):	N
Exempt 2 Heating Oil UST (2):	Y
Small Heating Oil AST (2):	N
Regulated AST (3):	N
Unregulated AST (3):	N
Other Y/N:	N
Unknown Y/N:	N
Other Description:	Not reported
Heating Oil Category:	Category 1

Count: 0 records.

ORPHAN SUMMARY

City	EDR ID	Site Name	Site Address	Zip	Database(s)
		NO SITES FOUND			

GOVERNMENT RECORDS SEARCHED / DATA CURRENCY TRACKING

To maintain currency of the following federal and state databases, EDR contacts the appropriate governmental agency on a monthly or quarterly basis, as required.

Number of Days to Update: Provides confirmation that EDR is reporting records that have been updated within 90 days from the date the government agency made the information available to the public.

STANDARD ENVIRONMENTAL RECORDS

Lists of Federal NPL (Superfund) sites

NPL: National Priority List

National Priorities List (Superfund). The NPL is a subset of CERCLIS and identifies over 1,200 sites for priority cleanup under the Superfund Program. NPL sites may encompass relatively large areas. As such, EDR provides polygon coverage for over 1,000 NPL site boundaries produced by EPA's Environmental Photographic Interpretation Center (EPIC) and regional EPA offices.

Date of Government Version: 04/27/2022
Date Data Arrived at EDR: 05/05/2022
Date Made Active in Reports: 05/31/2022
Number of Days to Update: 26

Source: EPA
Telephone: N/A
Last EDR Contact: 06/01/2022
Next Scheduled EDR Contact: 07/11/2022
Data Release Frequency: Quarterly

NPL Site Boundaries

Sources:

EPA's Environmental Photographic Interpretation Center (EPIC)
Telephone: 202-564-7333

EPA Region 1
Telephone 617-918-1143

EPA Region 6
Telephone: 214-655-6659

EPA Region 3
Telephone 215-814-5418

EPA Region 7
Telephone: 913-551-7247

EPA Region 4
Telephone 404-562-8033

EPA Region 8
Telephone: 303-312-6774

EPA Region 5
Telephone 312-886-6686

EPA Region 9
Telephone: 415-947-4246

EPA Region 10
Telephone 206-553-8665

Proposed NPL: Proposed National Priority List Sites

A site that has been proposed for listing on the National Priorities List through the issuance of a proposed rule in the Federal Register. EPA then accepts public comments on the site, responds to the comments, and places on the NPL those sites that continue to meet the requirements for listing.

Date of Government Version: 04/27/2022
Date Data Arrived at EDR: 05/05/2022
Date Made Active in Reports: 05/31/2022
Number of Days to Update: 26

Source: EPA
Telephone: N/A
Last EDR Contact: 06/01/2022
Next Scheduled EDR Contact: 07/11/2022
Data Release Frequency: Quarterly

NPL LIENS: Federal Superfund Liens

Federal Superfund Liens. Under the authority granted the USEPA by CERCLA of 1980, the USEPA has the authority to file liens against real property in order to recover remedial action expenditures or when the property owner received notification of potential liability. USEPA compiles a listing of filed notices of Superfund Liens.

Date of Government Version: 10/15/1991
Date Data Arrived at EDR: 02/02/1994
Date Made Active in Reports: 03/30/1994
Number of Days to Update: 56

Source: EPA
Telephone: 202-564-4267
Last EDR Contact: 08/15/2011
Next Scheduled EDR Contact: 11/28/2011
Data Release Frequency: No Update Planned

Lists of Federal Delisted NPL sites

Delisted NPL: National Priority List Deletions

The National Oil and Hazardous Substances Pollution Contingency Plan (NCP) establishes the criteria that the EPA uses to delete sites from the NPL. In accordance with 40 CFR 300.425.(e), sites may be deleted from the NPL where no further response is appropriate.

Date of Government Version: 04/27/2022
Date Data Arrived at EDR: 05/05/2022
Date Made Active in Reports: 05/31/2022
Number of Days to Update: 26

Source: EPA
Telephone: N/A
Last EDR Contact: 06/01/2022
Next Scheduled EDR Contact: 07/11/2022
Data Release Frequency: Quarterly

Lists of Federal sites subject to CERCLA removals and CERCLA orders

FEDERAL FACILITY: Federal Facility Site Information listing

A listing of National Priority List (NPL) and Base Realignment and Closure (BRAC) sites found in the Comprehensive Environmental Response, Compensation and Liability Information System (CERCLIS) Database where EPA Federal Facilities Restoration and Reuse Office is involved in cleanup activities.

Date of Government Version: 05/25/2021
Date Data Arrived at EDR: 06/24/2021
Date Made Active in Reports: 09/20/2021
Number of Days to Update: 88

Source: Environmental Protection Agency
Telephone: 703-603-8704
Last EDR Contact: 04/01/2022
Next Scheduled EDR Contact: 07/11/2022
Data Release Frequency: Varies

SEMS: Superfund Enterprise Management System

SEMS (Superfund Enterprise Management System) tracks hazardous waste sites, potentially hazardous waste sites, and remedial activities performed in support of EPA's Superfund Program across the United States. The list was formerly know as CERCLIS, renamed to SEMS by the EPA in 2015. The list contains data on potentially hazardous waste sites that have been reported to the USEPA by states, municipalities, private companies and private persons, pursuant to Section 103 of the Comprehensive Environmental Response, Compensation, and Liability Act (CERCLA). This dataset also contains sites which are either proposed to or on the National Priorities List (NPL) and the sites which are in the screening and assessment phase for possible inclusion on the NPL.

Date of Government Version: 04/27/2022
Date Data Arrived at EDR: 05/05/2022
Date Made Active in Reports: 05/31/2022
Number of Days to Update: 26

Source: EPA
Telephone: 800-424-9346
Last EDR Contact: 06/01/2022
Next Scheduled EDR Contact: 07/25/2022
Data Release Frequency: Quarterly

Lists of Federal CERCLA sites with NFRAP

SEMS-ARCHIVE: Superfund Enterprise Management System Archive

SEMS-ARCHIVE (Superfund Enterprise Management System Archive) tracks sites that have no further interest under the Federal Superfund Program based on available information. The list was formerly known as the CERCLIS-NFRAP, renamed to SEMS ARCHIVE by the EPA in 2015. EPA may perform a minimal level of assessment work at a site while it is archived if site conditions change and/or new information becomes available. Archived sites have been removed and archived from the inventory of SEMS sites. Archived status indicates that, to the best of EPA's knowledge, assessment at a site has been completed and that EPA has determined no further steps will be taken to list the site on the National Priorities List (NPL), unless information indicates this decision was not appropriate or other considerations require a recommendation for listing at a later time. The decision does not necessarily mean that there is no hazard associated with a given site; it only means that. based upon available information, the location is not judged to be potential NPL site.

Date of Government Version: 04/27/2022
Date Data Arrived at EDR: 05/05/2022
Date Made Active in Reports: 05/31/2022
Number of Days to Update: 26

Source: EPA
Telephone: 800-424-9346
Last EDR Contact: 06/01/2022
Next Scheduled EDR Contact: 07/25/2022
Data Release Frequency: Quarterly

Lists of Federal RCRA facilities undergoing Corrective Action

CORRACTS: Corrective Action Report

CORRACTS identifies hazardous waste handlers with RCRA corrective action activity.

Date of Government Version: 02/28/2022
Date Data Arrived at EDR: 03/02/2022
Date Made Active in Reports: 03/17/2022
Number of Days to Update: 15

Source: EPA
Telephone: 800-424-9346
Last EDR Contact: 04/06/2022
Next Scheduled EDR Contact: 07/04/2022
Data Release Frequency: Quarterly

Lists of Federal RCRA TSD facilities

RCRA-TSDF: RCRA - Treatment, Storage and Disposal

RCRAInfo is EPA's comprehensive information system, providing access to data supporting the Resource Conservation and Recovery Act (RCRA) of 1976 and the Hazardous and Solid Waste Amendments (HSWA) of 1984. The database includes selective information on sites which generate, transport, store, treat and/or dispose of hazardous waste as defined by the Resource Conservation and Recovery Act (RCRA). Transporters are individuals or entities that move hazardous waste from the generator offsite to a facility that can recycle, treat, store, or dispose of the waste. TSDFs treat, store, or dispose of the waste.

Date of Government Version: 02/28/2022
Date Data Arrived at EDR: 03/02/2022
Date Made Active in Reports: 03/17/2022
Number of Days to Update: 15

Source: Environmental Protection Agency
Telephone: 800-438-2474
Last EDR Contact: 04/06/2022
Next Scheduled EDR Contact: 07/04/2022
Data Release Frequency: Quarterly

Lists of Federal RCRA generators

RCRA-LQG: RCRA - Large Quantity Generators

RCRAInfo is EPA's comprehensive information system, providing access to data supporting the Resource Conservation and Recovery Act (RCRA) of 1976 and the Hazardous and Solid Waste Amendments (HSWA) of 1984. The database includes selective information on sites which generate, transport, store, treat and/or dispose of hazardous waste as defined by the Resource Conservation and Recovery Act (RCRA). Large quantity generators (LQGs) generate over 1,000 kilograms (kg) of hazardous waste, or over 1 kg of acutely hazardous waste per month.

Date of Government Version: 02/28/2022
Date Data Arrived at EDR: 03/02/2022
Date Made Active in Reports: 03/17/2022
Number of Days to Update: 15

Source: Environmental Protection Agency
Telephone: 800-438-2474
Last EDR Contact: 04/06/2022
Next Scheduled EDR Contact: 07/04/2022
Data Release Frequency: Quarterly

RCRA-SQG: RCRA - Small Quantity Generators

RCRAInfo is EPA's comprehensive information system, providing access to data supporting the Resource Conservation and Recovery Act (RCRA) of 1976 and the Hazardous and Solid Waste Amendments (HSWA) of 1984. The database includes selective information on sites which generate, transport, store, treat and/or dispose of hazardous waste as defined by the Resource Conservation and Recovery Act (RCRA). Small quantity generators (SQGs) generate between 100 kg and 1,000 kg of hazardous waste per month.

Date of Government Version: 02/28/2022
Date Data Arrived at EDR: 03/02/2022
Date Made Active in Reports: 03/17/2022
Number of Days to Update: 15

Source: Environmental Protection Agency
Telephone: 800-438-2474
Last EDR Contact: 04/06/2022
Next Scheduled EDR Contact: 07/04/2022
Data Release Frequency: Quarterly

RCRA-VSQG: RCRA - Very Small Quantity Generators (Formerly Conditionally Exempt Small Quantity Generators)

RCRAInfo is EPA's comprehensive information system, providing access to data supporting the Resource Conservation and Recovery Act (RCRA) of 1976 and the Hazardous and Solid Waste Amendments (HSWA) of 1984. The database includes selective information on sites which generate, transport, store, treat and/or dispose of hazardous waste as defined by the Resource Conservation and Recovery Act (RCRA). Very small quantity generators (VSQGs) generate less than 100 kg of hazardous waste, or less than 1 kg of acutely hazardous waste per month.

Date of Government Version: 02/28/2022
Date Data Arrived at EDR: 03/02/2022
Date Made Active in Reports: 03/17/2022
Number of Days to Update: 15

Source: Environmental Protection Agency
Telephone: 800-438-2474
Last EDR Contact: 04/06/2022
Next Scheduled EDR Contact: 07/04/2022
Data Release Frequency: Quarterly

Federal institutional controls / engineering controls registries

LUCIS: Land Use Control Information System

LUCIS contains records of land use control information pertaining to the former Navy Base Realignment and Closure properties.

Date of Government Version: 02/08/2022
Date Data Arrived at EDR: 02/11/2022
Date Made Active in Reports: 05/10/2022
Number of Days to Update: 88

Source: Department of the Navy
Telephone: 843-820-7326
Last EDR Contact: 05/05/2022
Next Scheduled EDR Contact: 08/22/2022
Data Release Frequency: Varies

US ENG CONTROLS: Engineering Controls Sites List

A listing of sites with engineering controls in place. Engineering controls include various forms of caps, building foundations, liners, and treatment methods to create pathway elimination for regulated substances to enter environmental media or effect human health.

Date of Government Version: 02/21/2022
Date Data Arrived at EDR: 02/23/2022
Date Made Active in Reports: 05/24/2022
Number of Days to Update: 90

Source: Environmental Protection Agency
Telephone: 703-603-0695
Last EDR Contact: 05/24/2022
Next Scheduled EDR Contact: 09/05/2022
Data Release Frequency: Varies

US INST CONTROLS: Institutional Controls Sites List

A listing of sites with institutional controls in place. Institutional controls include administrative measures, such as groundwater use restrictions, construction restrictions, property use restrictions, and post remediation care requirements intended to prevent exposure to contaminants remaining on site. Deed restrictions are generally required as part of the institutional controls.

Date of Government Version: 02/21/2022
Date Data Arrived at EDR: 02/23/2022
Date Made Active in Reports: 05/24/2022
Number of Days to Update: 90

Source: Environmental Protection Agency
Telephone: 703-603-0695
Last EDR Contact: 05/04/2022
Next Scheduled EDR Contact: 09/05/2022
Data Release Frequency: Varies

Federal ERNS list

ERNS: Emergency Response Notification System

Emergency Response Notification System. ERNS records and stores information on reported releases of oil and hazardous substances.

Date of Government Version: 12/31/2021
Date Data Arrived at EDR: 03/01/2022
Date Made Active in Reports: 03/10/2022
Number of Days to Update: 9

Source: National Response Center, United States Coast Guard
Telephone: 202-267-2180
Last EDR Contact: 06/15/2022
Next Scheduled EDR Contact: 10/03/2022
Data Release Frequency: Quarterly

Lists of state- and tribal hazardous waste facilities

SHWS: This state does not maintain a SHWS list. See the Federal CERCLIS list and Federal NPL list.

State Hazardous Waste Sites. State hazardous waste site records are the states' equivalent to CERCLIS. These sites may or may not already be listed on the federal CERCLIS list. Priority sites planned for cleanup using state funds (state equivalent of Superfund) are identified along with sites where cleanup will be paid for by potentially responsible parties. Available information varies by state.

Date of Government Version: N/A
Date Data Arrived at EDR: N/A
Date Made Active in Reports: N/A
Number of Days to Update: N/A

Source: Department of Environmental Quality
Telephone: 804-698-4236
Last EDR Contact: 06/09/2022
Next Scheduled EDR Contact: 09/26/2022
Data Release Frequency: N/A

Lists of state and tribal landfills and solid waste disposal facilities

SWF/LF: Solid Waste Management Facilities

Solid Waste Facilities/Landfill Sites. SWF/LF type records typically contain an inventory of solid waste disposal facilities or landfills in a particular state. Depending on the state, these may be active or inactive facilities or open dumps that failed to meet RCRA Subtitle D Section 4004 criteria for solid waste landfills or disposal sites.

Date of Government Version: 02/25/2022
Date Data Arrived at EDR: 02/28/2022
Date Made Active in Reports: 05/26/2022
Number of Days to Update: 87

Source: Department of Environmental Quality
Telephone: 804-698-4238
Last EDR Contact: 05/26/2022
Next Scheduled EDR Contact: 09/12/2022
Data Release Frequency: Semi-Annually

Lists of state and tribal leaking storage tanks

LUST REG PD: Leaking Underground Storage Tank Sites

Leaking underground storage tank site locaitons. Includes: counties of Amelia, Brunswick, Charles City, Chesterfield, Dinwiddie, Essex, Gloucester, Goochland, Greensville, Hanover, Henrico, King and Queen, King William, Lancaster, Mathews, Middlesex, New Kent, Northumberland, Powhatan, Prince George, Richmond, Surry, Sussex, Westmoreland; cities of Colonial Heights, Emporia, Hopewell, Petersburg.

Date of Government Version: 12/02/2014
Date Data Arrived at EDR: 12/04/2014
Date Made Active in Reports: 01/16/2015
Number of Days to Update: 43

Source: Department of Environmental Quality Piedmont Regional Office
Telephone: 804-527-5020
Last EDR Contact: 08/29/2016
Next Scheduled EDR Contact: 12/12/2016
Data Release Frequency: Quarterly

LUST REG SC: Leaking Underground Storage Tanks

Leaking underground storage tank site locations. Includes: counties of Amherst, Appomattox, Buckingham, Campbell, Charlotte, Cumberland, Halifax, Lunenburg, Mecklenburg, Nottoway, Pittsylvania, Prince Deward; cities of Danville, Lynchburg.

Date of Government Version: 09/06/2013
Date Data Arrived at EDR: 09/06/2013
Date Made Active in Reports: 09/17/2013
Number of Days to Update: 11

Source: Department of Environmental Quality, South Central Region
Telephone: 434-582-5120
Last EDR Contact: 08/29/2016
Next Scheduled EDR Contact: 12/12/2016
Data Release Frequency: Semi-Annually

LUST REG TD: Leaking Underground Storage Tank Sites

Leaking underground storage tank site locations. Includes: counties of Accomack, Isle of Wight, James City, Northampton, Southampton, York; cities of Chesapeake, Franklin, Hampton, Newport News, Norfolk, Poquoson, Portsmouth, Suffolk, Virginia Beach, Williamsburg.

Date of Government Version: 06/30/2013
Date Data Arrived at EDR: 07/05/2013
Date Made Active in Reports: 09/16/2013
Number of Days to Update: 73

Source: Department of Environmental Quality Tidewater Regional Office
Telephone: trofoia@deq.vir
Last EDR Contact: 09/26/2016
Next Scheduled EDR Contact: 01/09/2017
Data Release Frequency: Quarterly

LUST REG NO: Leaking Underground Storage Tank Tracking Database

Leaking underground storage tank site locations. Includes: counties of Arlington, Caroline, Culpeper, Fairfax, Fauquier, King George, Loudoun, Louisa, Madison, Orange, Prince William, Rappahannock, Spotsylvania, Stafford; cities of Alexandria, Fairfax, Falls Church, Fredericksburg, Manassas, Manassas Park.

Date of Government Version: 05/18/2004
Date Data Arrived at EDR: 05/22/2004
Date Made Active in Reports: 07/09/2004
Number of Days to Update: 48

Source: Department of Environmental Quality Northern Regional Office
Telephone: 703-583-3800
Last EDR Contact: 09/06/2011
Next Scheduled EDR Contact: 12/19/2011
Data Release Frequency: No Update Planned

LUST REG WC: Leaking Underground Storage Tank List

Leaking underground storage tank site locations. Includes: counties of Alleghany, Bedford, Botetourt, Craig, Floyd, Franklin, Giles, Henry, Montgomery, Patrick, Pulaski, Roanoke; cities of Bedford, Clifton Forge, Covington, Martinsville, Radford, Roanoke, Salem.

Date of Government Version: 06/04/2015
Date Data Arrived at EDR: 06/05/2015
Date Made Active in Reports: 07/07/2015
Number of Days to Update: 32

Source: Department of Environmental Quality West Central Regional Office
Telephone: 540-562-6700
Last EDR Contact: 08/29/2016
Next Scheduled EDR Contact: 12/12/2016
Data Release Frequency: No Update Planned

LUST REG VA: Leaking Underground Storage Tank List

Leaking underground storage tank site locations. Includes: counties of Albemarle, Augusta, Bath, Clarke, Fluvanna, Frederick, Greene, Highland, Nelson, Page, Rockbridge, Rockingham, Shenandoah, Warren; cities of Buena Vista, Charlottesville, Harrisonburg, Lexington, Staunton, Waynesboro, Winchester.

Date of Government Version: 12/06/2011
Date Data Arrived at EDR: 12/08/2011
Date Made Active in Reports: 01/16/2012
Number of Days to Update: 39

Source: Department of Environmental Quality Valley Regional Office
Telephone: 540-574-7800
Last EDR Contact: 08/29/2016
Next Scheduled EDR Contact: 12/12/2016
Data Release Frequency: No Update Planned

LUST REG SW: Leaking Underground Storage Tank Database

Leaking underground storage tank site locations. Includes: counties of Bland, Buchanan, Carroll, Dickenson, Grayson, Lee, Russell, Scott, Smyth, Tazewell, Washington, Wise, Wythe; cities of Bristol, Galax, Norton.

Date of Government Version: 07/15/2013
Date Data Arrived at EDR: 07/18/2013
Date Made Active in Reports: 09/16/2013
Number of Days to Update: 60

Source: Department of Environmental Quality Southwest Regional Office
Telephone: 276-676-4800
Last EDR Contact: 10/11/2016
Next Scheduled EDR Contact: 01/23/2017
Data Release Frequency: No Update Planned

INDIAN LUST R7: Leaking Underground Storage Tanks on Indian Land
LUSTs on Indian land in Iowa, Kansas, and Nebraska

Date of Government Version: 10/12/2021
Date Data Arrived at EDR: 11/15/2021
Date Made Active in Reports: 02/08/2022
Number of Days to Update: 85

Source: EPA Region 7
Telephone: 913-551-7003
Last EDR Contact: 06/13/2022
Next Scheduled EDR Contact: 08/01/2022
Data Release Frequency: Varies

INDIAN LUST R8: Leaking Underground Storage Tanks on Indian Land
LUSTs on Indian land in Colorado, Montana, North Dakota, South Dakota, Utah and Wyoming.

Date of Government Version: 10/12/2021
Date Data Arrived at EDR: 11/15/2021
Date Made Active in Reports: 02/08/2022
Number of Days to Update: 85

Source: EPA Region 8
Telephone: 303-312-6271
Last EDR Contact: 06/13/2022
Next Scheduled EDR Contact: 08/01/2022
Data Release Frequency: Varies

INDIAN LUST R9: Leaking Underground Storage Tanks on Indian Land
LUSTs on Indian land in Arizona, California, New Mexico and Nevada

Date of Government Version: 10/12/2021
Date Data Arrived at EDR: 11/15/2021
Date Made Active in Reports: 02/08/2022
Number of Days to Update: 85

Source: Environmental Protection Agency
Telephone: 415-972-3372
Last EDR Contact: 06/13/2022
Next Scheduled EDR Contact: 08/01/2022
Data Release Frequency: Varies

INDIAN LUST R10: Leaking Underground Storage Tanks on Indian Land
LUSTs on Indian land in Alaska, Idaho, Oregon and Washington.

Date of Government Version: 10/12/2021
Date Data Arrived at EDR: 11/15/2021
Date Made Active in Reports: 02/08/2022
Number of Days to Update: 85

Source: EPA Region 10
Telephone: 206-553-2857
Last EDR Contact: 06/13/2022
Next Scheduled EDR Contact: 08/01/2022
Data Release Frequency: Varies

INDIAN LUST R6: Leaking Underground Storage Tanks on Indian Land
LUSTs on Indian land in New Mexico and Oklahoma.

Date of Government Version: 10/12/2021
Date Data Arrived at EDR: 11/15/2021
Date Made Active in Reports: 02/08/2022
Number of Days to Update: 85

Source: EPA Region 6
Telephone: 214-665-6597
Last EDR Contact: 06/13/2022
Next Scheduled EDR Contact: 08/01/2022
Data Release Frequency: Varies

INDIAN LUST R1: Leaking Underground Storage Tanks on Indian Land
A listing of leaking underground storage tank locations on Indian Land.

Date of Government Version: 04/28/2021
Date Data Arrived at EDR: 06/11/2021
Date Made Active in Reports: 09/07/2021
Number of Days to Update: 88

Source: EPA Region 1
Telephone: 617-918-1313
Last EDR Contact: 06/13/2022
Next Scheduled EDR Contact: 08/01/2022
Data Release Frequency: Varies

INDIAN LUST R4: Leaking Underground Storage Tanks on Indian Land
LUSTs on Indian land in Florida, Mississippi and North Carolina.

Date of Government Version: 05/28/2021
Date Data Arrived at EDR: 06/22/2021
Date Made Active in Reports: 09/20/2021
Number of Days to Update: 90

Source: EPA Region 4
Telephone: 404-562-8677
Last EDR Contact: 06/13/2022
Next Scheduled EDR Contact: 08/01/2022
Data Release Frequency: Varies

INDIAN LUST R5: Leaking Underground Storage Tanks on Indian Land
Leaking underground storage tanks located on Indian Land in Michigan, Minnesota and Wisconsin.

Date of Government Version: 10/12/2021
Date Data Arrived at EDR: 11/15/2021
Date Made Active in Reports: 02/08/2022
Number of Days to Update: 85

Source: EPA, Region 5
Telephone: 312-886-7439
Last EDR Contact: 06/13/2022
Next Scheduled EDR Contact: 08/01/2022
Data Release Frequency: Varies

LTANKS: Leaking Petroleum Storage Tanks
Includes releases of petroleum from underground storage tanks and aboveground storage tanks.

Date of Government Version: 02/03/2022
Date Data Arrived at EDR: 02/24/2022
Date Made Active in Reports: 05/23/2022
Number of Days to Update: 88

Source: Department of Environmental Quality
Telephone: 804-698-4010
Last EDR Contact: 05/25/2022
Next Scheduled EDR Contact: 09/05/2022
Data Release Frequency: Quarterly

Lists of state and tribal registered storage tanks

FEMA UST: Underground Storage Tank Listing
A listing of all FEMA owned underground storage tanks.

Date of Government Version: 10/14/2021
Date Data Arrived at EDR: 11/05/2021
Date Made Active in Reports: 02/01/2022
Number of Days to Update: 88

Source: FEMA
Telephone: 202-646-5797
Last EDR Contact: 04/04/2022
Next Scheduled EDR Contact: 07/18/2022
Data Release Frequency: Varies

UST: Registered Petroleum Storage Tanks
Registered Underground Storage Tanks. UST's are regulated under Subtitle I of the Resource Conservation and Recovery Act (RCRA) and must be registered with the state department responsible for administering the UST program. Available information varies by state program.

Date of Government Version: 02/02/2022
Date Data Arrived at EDR: 02/24/2022
Date Made Active in Reports: 05/23/2022
Number of Days to Update: 88

Source: Department of Environmental Quality
Telephone: 804-698-4010
Last EDR Contact: 05/25/2022
Next Scheduled EDR Contact: 09/05/2022
Data Release Frequency: Quarterly

AST: Registered Petroleum Storage Tanks
Registered Aboveground Storage Tanks.

Date of Government Version: 02/02/2022
Date Data Arrived at EDR: 02/24/2022
Date Made Active in Reports: 05/23/2022
Number of Days to Update: 88

Source: Department of Environmental Quality
Telephone: 804-698-4010
Last EDR Contact: 05/25/2022
Next Scheduled EDR Contact: 09/05/2022
Data Release Frequency: Quarterly

INDIAN UST R4: Underground Storage Tanks on Indian Land
The Indian Underground Storage Tank (UST) database provides information about underground storage tanks on Indian land in EPA Region 4 (Alabama, Florida, Georgia, Kentucky, Mississippi, North Carolina, South Carolina, Tennessee and Tribal Nations)

Date of Government Version: 05/28/2021
Date Data Arrived at EDR: 06/22/2021
Date Made Active in Reports: 09/20/2021
Number of Days to Update: 90

Source: EPA Region 4
Telephone: 404-562-9424
Last EDR Contact: 06/13/2022
Next Scheduled EDR Contact: 08/01/2022
Data Release Frequency: Varies

INDIAN UST R6: Underground Storage Tanks on Indian Land

The Indian Underground Storage Tank (UST) database provides information about underground storage tanks on Indian land in EPA Region 6 (Louisiana, Arkansas, Oklahoma, New Mexico, Texas and 65 Tribes).

Date of Government Version: 10/12/2021
Date Data Arrived at EDR: 11/15/2021
Date Made Active in Reports: 02/08/2022
Number of Days to Update: 85

Source: EPA Region 6
Telephone: 214-665-7591
Last EDR Contact: 06/13/2022
Next Scheduled EDR Contact: 08/01/2022
Data Release Frequency: Varies

INDIAN UST R5: Underground Storage Tanks on Indian Land

The Indian Underground Storage Tank (UST) database provides information about underground storage tanks on Indian land in EPA Region 5 (Michigan, Minnesota and Wisconsin and Tribal Nations).

Date of Government Version: 04/06/2021
Date Data Arrived at EDR: 06/11/2021
Date Made Active in Reports: 09/07/2021
Number of Days to Update: 88

Source: EPA Region 5
Telephone: 312-886-6136
Last EDR Contact: 06/13/2022
Next Scheduled EDR Contact: 08/01/2022
Data Release Frequency: Varies

INDIAN UST R1: Underground Storage Tanks on Indian Land

The Indian Underground Storage Tank (UST) database provides information about underground storage tanks on Indian land in EPA Region 1 (Connecticut, Maine, Massachusetts, New Hampshire, Rhode Island, Vermont and ten Tribal Nations).

Date of Government Version: 10/14/2021
Date Data Arrived at EDR: 11/15/2021
Date Made Active in Reports: 02/08/2022
Number of Days to Update: 85

Source: EPA, Region 1
Telephone: 617-918-1313
Last EDR Contact: 06/13/2022
Next Scheduled EDR Contact: 08/01/2022
Data Release Frequency: Varies

INDIAN UST R10: Underground Storage Tanks on Indian Land

The Indian Underground Storage Tank (UST) database provides information about underground storage tanks on Indian land in EPA Region 10 (Alaska, Idaho, Oregon, Washington, and Tribal Nations).

Date of Government Version: 10/12/2021
Date Data Arrived at EDR: 11/15/2021
Date Made Active in Reports: 02/08/2022
Number of Days to Update: 85

Source: EPA Region 10
Telephone: 206-553-2857
Last EDR Contact: 06/13/2022
Next Scheduled EDR Contact: 08/01/2022
Data Release Frequency: Varies

INDIAN UST R7: Underground Storage Tanks on Indian Land

The Indian Underground Storage Tank (UST) database provides information about underground storage tanks on Indian land in EPA Region 7 (Iowa, Kansas, Missouri, Nebraska, and 9 Tribal Nations).

Date of Government Version: 10/12/2021
Date Data Arrived at EDR: 11/15/2021
Date Made Active in Reports: 02/08/2022
Number of Days to Update: 85

Source: EPA Region 7
Telephone: 913-551-7003
Last EDR Contact: 06/13/2022
Next Scheduled EDR Contact: 08/01/2022
Data Release Frequency: Varies

INDIAN UST R8: Underground Storage Tanks on Indian Land

The Indian Underground Storage Tank (UST) database provides information about underground storage tanks on Indian land in EPA Region 8 (Colorado, Montana, North Dakota, South Dakota, Utah, Wyoming and 27 Tribal Nations).

Date of Government Version: 10/12/2021
Date Data Arrived at EDR: 11/15/2021
Date Made Active in Reports: 02/08/2022
Number of Days to Update: 85

Source: EPA Region 8
Telephone: 303-312-6137
Last EDR Contact: 06/13/2022
Next Scheduled EDR Contact: 08/01/2022
Data Release Frequency: Varies

INDIAN UST R9: Underground Storage Tanks on Indian Land
The Indian Underground Storage Tank (UST) database provides information about underground storage tanks on Indian land in EPA Region 9 (Arizona, California, Hawaii, Nevada, the Pacific Islands, and Tribal Nations).

Date of Government Version: 10/12/2021
Date Data Arrived at EDR: 11/15/2021
Date Made Active in Reports: 02/08/2022
Number of Days to Update: 85

Source: EPA Region 9
Telephone: 415-972-3368
Last EDR Contact: 06/13/2022
Next Scheduled EDR Contact: 08/01/2022
Data Release Frequency: Varies

State and tribal institutional control / engineering control registries

ENG CONTROLS: Engineering Controls Sites Listing
A listing of sites with Engineering Controls in place. Engineering controls include various forms of caps, building foundations, liners, and treatment methods to create pathway elimination for regulated substances to enter environmental media or effect human health.

Date of Government Version: 12/28/2021
Date Data Arrived at EDR: 01/05/2022
Date Made Active in Reports: 03/21/2022
Number of Days to Update: 75

Source: Department of Environmental Quality
Telephone: 804-698-4228
Last EDR Contact: 04/04/2022
Next Scheduled EDR Contact: 07/18/2022
Data Release Frequency: Quarterly

INST CONTROL: Voluntary Remediation Program Database
Sites included in the Voluntary Remediation Program database that have deed restrictions.

Date of Government Version: 12/28/2021
Date Data Arrived at EDR: 01/05/2022
Date Made Active in Reports: 03/21/2022
Number of Days to Update: 75

Source: Department of Environmental Quality
Telephone: 804-698-4228
Last EDR Contact: 04/04/2022
Next Scheduled EDR Contact: 07/18/2022
Data Release Frequency: Quarterly

Lists of state and tribal voluntary cleanup sites

INDIAN VCP R7: Voluntary Cleanup Priority Lisitng
A listing of voluntary cleanup priority sites located on Indian Land located in Region 7.

Date of Government Version: 03/20/2008
Date Data Arrived at EDR: 04/22/2008
Date Made Active in Reports: 05/19/2008
Number of Days to Update: 27

Source: EPA, Region 7
Telephone: 913-551-7365
Last EDR Contact: 07/08/2021
Next Scheduled EDR Contact: 07/20/2009
Data Release Frequency: Varies

VRP: Voluntary Remediation Program
The Voluntary Cleanup Program encourages owners of elected contaminated sites to take the initiative and conduct voluntary cleanups that meet state environmental standards.

Date of Government Version: 12/28/2021
Date Data Arrived at EDR: 01/05/2022
Date Made Active in Reports: 03/21/2022
Number of Days to Update: 75

Source: Department of Environmental Quality
Telephone: 804-698-4228
Last EDR Contact: 04/04/2022
Next Scheduled EDR Contact: 07/18/2022
Data Release Frequency: Quarterly

INDIAN VCP R1: Voluntary Cleanup Priority Listing
A listing of voluntary cleanup priority sites located on Indian Land located in Region 1.

Date of Government Version: 07/27/2015
Date Data Arrived at EDR: 09/29/2015
Date Made Active in Reports: 02/18/2016
Number of Days to Update: 142

Source: EPA, Region 1
Telephone: 617-918-1102
Last EDR Contact: 06/15/2022
Next Scheduled EDR Contact: 10/03/2022
Data Release Frequency: Varies

Lists of state and tribal brownfield sites

BROWNFIELDS: Brownfields Site Specific Assessments

To qualify for Brownfields Assessment, the site must meet the Federal definition of a Brownfields and should have contaminant issues that need to be addressed and a redevelopment plan supported by the local government and community. Virginia's Department of Environmental Quality performs brownfields assessments under a cooperative agreement with the U.S. Environmental Protection Agency at no cost to communities, property owners or, prospective purchasers. The assessment is an evaluation of environmental impacts caused by previous site uses similar to a Phase II Environmental Assessment.

Date of Government Version: 01/19/2022
Date Data Arrived at EDR: 01/20/2022
Date Made Active in Reports: 04/13/2022
Number of Days to Update: 83

Source: Department of Environmental Quality
Telephone: 804-698-4207
Last EDR Contact: 04/20/2022
Next Scheduled EDR Contact: 08/01/2022
Data Release Frequency: Quarterly

ADDITIONAL ENVIRONMENTAL RECORDS

Local Brownfield lists

US BROWNFIELDS: A Listing of Brownfields Sites

Brownfields are real property, the expansion, redevelopment, or reuse of which may be complicated by the presence or potential presence of a hazardous substance, pollutant, or contaminant. Cleaning up and reinvesting in these properties takes development pressures off of undeveloped, open land, and both improves and protects the environment. Assessment, Cleanup and Redevelopment Exchange System (ACRES) stores information reported by EPA Brownfields grant recipients on brownfields properties assessed or cleaned up with grant funding as well as information on Targeted Brownfields Assessments performed by EPA Regions. A listing of ACRES Brownfield sites is obtained from Cleanups in My Community. Cleanups in My Community provides information on Brownfields properties for which information is reported back to EPA, as well as areas served by Brownfields grant programs.

Date of Government Version: 02/23/2022
Date Data Arrived at EDR: 03/10/2022
Date Made Active in Reports: 03/10/2022
Number of Days to Update: 0

Source: Environmental Protection Agency
Telephone: 202-566-2777
Last EDR Contact: 06/13/2022
Next Scheduled EDR Contact: 09/26/2022
Data Release Frequency: Semi-Annually

Local Lists of Landfill / Solid Waste Disposal Sites

INDIAN ODI: Report on the Status of Open Dumps on Indian Lands

Location of open dumps on Indian land.

Date of Government Version: 12/31/1998
Date Data Arrived at EDR: 12/03/2007
Date Made Active in Reports: 01/24/2008
Number of Days to Update: 52

Source: Environmental Protection Agency
Telephone: 703-308-8245
Last EDR Contact: 04/21/2022
Next Scheduled EDR Contact: 08/08/2022
Data Release Frequency: Varies

ODI: Open Dump Inventory

An open dump is defined as a disposal facility that does not comply with one or more of the Part 257 or Part 258 Subtitle D Criteria.

Date of Government Version: 06/30/1985
Date Data Arrived at EDR: 08/09/2004
Date Made Active in Reports: 09/17/2004
Number of Days to Update: 39

Source: Environmental Protection Agency
Telephone: 800-424-9346
Last EDR Contact: 06/09/2004
Next Scheduled EDR Contact: N/A
Data Release Frequency: No Update Planned

DEBRIS REGION 9: Torres Martinez Reservation Illegal Dump Site Locations

A listing of illegal dump sites location on the Torres Martinez Indian Reservation located in eastern Riverside County and northern Imperial County, California.

Date of Government Version: 01/12/2009
Date Data Arrived at EDR: 05/07/2009
Date Made Active in Reports: 09/21/2009
Number of Days to Update: 137

Source: EPA, Region 9
Telephone: 415-947-4219
Last EDR Contact: 04/14/2022
Next Scheduled EDR Contact: 08/01/2022
Data Release Frequency: No Update Planned

IHS OPEN DUMPS: Open Dumps on Indian Land

A listing of all open dumps located on Indian Land in the United States.

Date of Government Version: 04/01/2014
Date Data Arrived at EDR: 08/06/2014
Date Made Active in Reports: 01/29/2015
Number of Days to Update: 176

Source: Department of Health & Human Serivces, Indian Health Service
Telephone: 301-443-1452
Last EDR Contact: 04/28/2022
Next Scheduled EDR Contact: 08/08/2022
Data Release Frequency: Varies

Local Lists of Hazardous waste / Contaminated Sites

US HIST CDL: National Clandestine Laboratory Register

A listing of clandestine drug lab locations that have been removed from the DEAs National Clandestine Laboratory Register.

Date of Government Version: 02/22/2022
Date Data Arrived at EDR: 02/23/2022
Date Made Active in Reports: 05/10/2022
Number of Days to Update: 76

Source: Drug Enforcement Administration
Telephone: 202-307-1000
Last EDR Contact: 05/24/2022
Next Scheduled EDR Contact: 09/05/2022
Data Release Frequency: No Update Planned

US CDL: Clandestine Drug Labs

A listing of clandestine drug lab locations. The U.S. Department of Justice ("the Department") provides this web site as a public service. It contains addresses of some locations where law enforcement agencies reported they found chemicals or other items that indicated the presence of either clandestine drug laboratories or dumpsites. In most cases, the source of the entries is not the Department, and the Department has not verified the entry and does not guarantee its accuracy. Members of the public must verify the accuracy of all entries by, for example, contacting local law enforcement and local health departments.

Date of Government Version: 02/22/2022
Date Data Arrived at EDR: 02/23/2022
Date Made Active in Reports: 05/10/2022
Number of Days to Update: 76

Source: Drug Enforcement Administration
Telephone: 202-307-1000
Last EDR Contact: 05/24/2022
Next Scheduled EDR Contact: 09/05/2022
Data Release Frequency: Quarterly

PFAS: Per- and Polyfluoroalkyl Substances

PFOS and PFOA stand for perfluorooctane sulfonate and perfluorooctanoic acid, respectively. Both are fluorinated organic chemicals, part of a larger family of compounds referred to as perfluoroalkyl substances (PFASs).

Date of Government Version: 11/19/2021
Date Data Arrived at EDR: 01/06/2022
Date Made Active in Reports: 03/21/2022
Number of Days to Update: 74

Source: Department of Environmental Quality
Telephone: 804-698-4336
Last EDR Contact: 04/04/2022
Next Scheduled EDR Contact: 07/18/2022
Data Release Frequency: Varies

Local Land Records

LIENS 2: CERCLA Lien Information

A Federal CERCLA ('Superfund') lien can exist by operation of law at any site or property at which EPA has spent Superfund monies. These monies are spent to investigate and address releases and threatened releases of contamination. CERCLIS provides information as to the identity of these sites and properties.

Date of Government Version: 04/27/2022
Date Data Arrived at EDR: 05/05/2022
Date Made Active in Reports: 05/31/2022
Number of Days to Update: 26

Source: Environmental Protection Agency
Telephone: 202-564-6023
Last EDR Contact: 06/01/2022
Next Scheduled EDR Contact: 07/11/2022
Data Release Frequency: Semi-Annually

Records of Emergency Release Reports

HMIRS: Hazardous Materials Information Reporting System
Hazardous Materials Incident Report System. HMIRS contains hazardous material spill incidents reported to DOT.

Date of Government Version: 03/21/2022
Date Data Arrived at EDR: 03/21/2022
Date Made Active in Reports: 06/14/2022
Number of Days to Update: 85

Source: U.S. Department of Transportation
Telephone: 202-366-4555
Last EDR Contact: 03/21/2022
Next Scheduled EDR Contact: 07/04/2022
Data Release Frequency: Quarterly

SPILLS BRL: Prep/Spills Database Listing
A listing of spills locations located in the Blue Ridge Regional area, Lynchburg.

Date of Government Version: 09/18/2009
Date Data Arrived at EDR: 09/18/2009
Date Made Active in Reports: 10/06/2009
Number of Days to Update: 18

Source: DEQ, Blue Ridge Regional Office
Telephone: 434-582-6218
Last EDR Contact: 11/28/2011
Next Scheduled EDR Contact: 03/12/2012
Data Release Frequency: Varies

SPILLS VA: PREP Database
The Department of Environmental Quality's POLLUTION RESPONSE PROGRAM, known as PREP, provides for responses to air, water, and waste pollution incidents in order to protect human health and the environment.

Date of Government Version: 08/08/2012
Date Data Arrived at EDR: 08/09/2012
Date Made Active in Reports: 10/05/2012
Number of Days to Update: 57

Source: Department of Environmental Quality, Valley Regional Office
Telephone: 540-574-7800
Last EDR Contact: 05/06/2013
Next Scheduled EDR Contact: 08/19/2013
Data Release Frequency: Quarterly

SPILLS TD: PREP Database
The Department of Environmental Quality's POLLUTION RESPONSE PROGRAM, known as PREP, provides for responses to air, water, and waste pollution incidents in order to protect human health and the environment.

Date of Government Version: 09/17/2009
Date Data Arrived at EDR: 09/23/2009
Date Made Active in Reports: 10/06/2009
Number of Days to Update: 13

Source: Department of Environmental Quality, Tidewater Region
Telephone: trofoia@deq.vir
Last EDR Contact: 09/06/2011
Next Scheduled EDR Contact: 12/19/2011
Data Release Frequency: Quarterly

SPILLS: Prep/Spills Database Listing
The Department of Environmental Quality's POLLUTION RESPONSE PROGRAM, known as PREP, provides for responses to air, water, and waste pollution incidents in order to protect human health and the environment. PREP staff often work to assist local emergency responders, other state agencies, federal agencies, and responsible parties, as may be needed, to manage pollution incidents. Oil spills, fish kills, and hazardous materials spills are examples of incidents that may involve the DEQ's PREP Program.

Date of Government Version: 02/03/2022
Date Data Arrived at EDR: 02/10/2022
Date Made Active in Reports: 05/10/2022
Number of Days to Update: 89

Source: Department of Environmental Quality
Telephone: 804-698-4287
Last EDR Contact: 05/25/2022
Next Scheduled EDR Contact: 09/05/2022
Data Release Frequency: Quarterly

SPILLS SW: Reportable Spills
The Department of Environmental Quality's POLLUTION RESPONSE PROGRAM, known as PREP, provides for responses to air, water, and waste pollution incidents in order to protect human health and the environment.

Date of Government Version: 01/21/2010
Date Data Arrived at EDR: 01/22/2010
Date Made Active in Reports: 02/16/2010
Number of Days to Update: 25

Source: Department of Environmental Quality, Southwest Region
Telephone: 276-676-4839
Last EDR Contact: 07/13/2012
Next Scheduled EDR Contact: 10/29/2012
Data Release Frequency: No Update Planned

SPILLS PD: PREP Database

The Department of Environmental Quality's POLLUTION RESPONSE PROGRAM, known as PREP, provides for responses to air, water, and waste pollution incidents in order to protect human health and the environment.

Date of Government Version: 10/20/2009
Date Data Arrived at EDR: 10/29/2009
Date Made Active in Reports: 12/03/2009
Number of Days to Update: 35

Source: Department of Environmental Quality, Piedmont Region
Telephone: 804-527-5020
Last EDR Contact: 02/06/2012
Next Scheduled EDR Contact: 05/21/2012
Data Release Frequency: Quarterly

SPILLS NO: PREP Database

The Department of Environmental Quality's POLLUTION RESPONSE PROGRAM, known as PREP, provides for responses to air, water, and waste pollution incidents in order to protect human health and the environment.

Date of Government Version: 09/23/2009
Date Data Arrived at EDR: 09/29/2009
Date Made Active in Reports: 10/30/2009
Number of Days to Update: 31

Source: Department of Environmental Quality, Northern Region
Telephone: 703-583-3864
Last EDR Contact: 09/06/2011
Next Scheduled EDR Contact: 12/19/2011
Data Release Frequency: No Update Planned

SPILLS PC: Pollution Complaint Database

Pollution Complaints Database. The pollution reports contained in the PC database include the initial release reporting of Leaking Underground Storage Tanks and all other releases of petroleum to the environment as well as releases to state waters. The database is current through 12/1/93. Since that time, all spill and pollution reporting information has been collected and tracked through the DEQ regional offices.

Date of Government Version: 06/01/1996
Date Data Arrived at EDR: 10/22/1996
Date Made Active in Reports: 11/21/1996
Number of Days to Update: 30

Source: Department of Environmental Quality
Telephone: 804-698-4287
Last EDR Contact: 03/08/2010
Next Scheduled EDR Contact: 06/21/2010
Data Release Frequency: No Update Planned

SPILLS WC: Prep Database

The Department of Environmental Quality's POLLUTION RESPONSE PROGRAM, known as PREP, provides for responses to air, water, and waste pollution incidents in order to protect human health and the environment.

Date of Government Version: 09/21/2009
Date Data Arrived at EDR: 09/29/2009
Date Made Active in Reports: 10/30/2009
Number of Days to Update: 31

Source: Department of Environmental Quality, West Central Region
Telephone: 540-562-6700
Last EDR Contact: 09/06/2011
Next Scheduled EDR Contact: 12/19/2011
Data Release Frequency: No Update Planned

SPILLS 90: SPILLS90 data from FirstSearch

Spills 90 includes those spill and release records available exclusively from FirstSearch databases. Typically, they may include chemical, oil and/or hazardous substance spills recorded after 1990. Duplicate records that are already included in EDR incident and release records are not included in Spills 90.

Date of Government Version: 09/01/2012
Date Data Arrived at EDR: 01/03/2013
Date Made Active in Reports: 02/15/2013
Number of Days to Update: 43

Source: FirstSearch
Telephone: N/A
Last EDR Contact: 01/03/2013
Next Scheduled EDR Contact: N/A
Data Release Frequency: No Update Planned

Other Ascertainable Records

RCRA NonGen / NLR: RCRA - Non Generators / No Longer Regulated

RCRAInfo is EPA's comprehensive information system, providing access to data supporting the Resource Conservation and Recovery Act (RCRA) of 1976 and the Hazardous and Solid Waste Amendments (HSWA) of 1984. The database includes selective information on sites which generate, transport, store, treat and/or dispose of hazardous waste as defined by the Resource Conservation and Recovery Act (RCRA). Non-Generators do not presently generate hazardous waste.

Date of Government Version: 02/28/2022
Date Data Arrived at EDR: 03/02/2022
Date Made Active in Reports: 03/17/2022
Number of Days to Update: 15

Source: Environmental Protection Agency
Telephone: 800-438-2474
Last EDR Contact: 04/06/2022
Next Scheduled EDR Contact: 07/04/2022
Data Release Frequency: Quarterly

FUDS: Formerly Used Defense Sites

The listing includes locations of Formerly Used Defense Sites properties where the US Army Corps of Engineers is actively working or will take necessary cleanup actions.

Date of Government Version: 12/01/2021
Date Data Arrived at EDR: 02/15/2022
Date Made Active in Reports: 05/10/2022
Number of Days to Update: 84

Source: U.S. Army Corps of Engineers
Telephone: 202-528-4285
Last EDR Contact: 05/17/2022
Next Scheduled EDR Contact: 08/29/2022
Data Release Frequency: Varies

DOD: Department of Defense Sites

This data set consists of federally owned or administered lands, administered by the Department of Defense, that have any area equal to or greater than 640 acres of the United States, Puerto Rico, and the U.S. Virgin Islands.

Date of Government Version: 06/07/2021
Date Data Arrived at EDR: 07/13/2021
Date Made Active in Reports: 03/09/2022
Number of Days to Update: 239

Source: USGS
Telephone: 888-275-8747
Last EDR Contact: 04/12/2022
Next Scheduled EDR Contact: 07/25/2022
Data Release Frequency: Varies

FEDLAND: Federal and Indian Lands

Federally and Indian administrated lands of the United States. Lands included are administrated by: Army Corps of Engineers, Bureau of Reclamation, National Wild and Scenic River, National Wildlife Refuge, Public Domain Land, Wilderness, Wilderness Study Area, Wildlife Management Area, Bureau of Indian Affairs, Bureau of Land Management, Department of Justice, Forest Service, Fish and Wildlife Service, National Park Service.

Date of Government Version: 04/02/2018
Date Data Arrived at EDR: 04/11/2018
Date Made Active in Reports: 11/06/2019
Number of Days to Update: 574

Source: U.S. Geological Survey
Telephone: 888-275-8747
Last EDR Contact: 04/05/2022
Next Scheduled EDR Contact: 07/18/2022
Data Release Frequency: N/A

SCRD DRYCLEANERS: State Coalition for Remediation of Drycleaners Listing

The State Coalition for Remediation of Drycleaners was established in 1998, with support from the U.S. EPA Office of Superfund Remediation and Technology Innovation. It is comprised of representatives of states with established drycleaner remediation programs. Currently the member states are Alabama, Connecticut, Florida, Illinois, Kansas, Minnesota, Missouri, North Carolina, Oregon, South Carolina, Tennessee, Texas, and Wisconsin.

Date of Government Version: 01/01/2017
Date Data Arrived at EDR: 02/03/2017
Date Made Active in Reports: 04/07/2017
Number of Days to Update: 63

Source: Environmental Protection Agency
Telephone: 615-532-8599
Last EDR Contact: 05/06/2022
Next Scheduled EDR Contact: 08/22/2022
Data Release Frequency: Varies

US FIN ASSUR: Financial Assurance Information

All owners and operators of facilities that treat, store, or dispose of hazardous waste are required to provide proof that they will have sufficient funds to pay for the clean up, closure, and post-closure care of their facilities.

Date of Government Version: 03/21/2022
Date Data Arrived at EDR: 03/21/2022
Date Made Active in Reports: 06/14/2022
Number of Days to Update: 85

Source: Environmental Protection Agency
Telephone: 202-566-1917
Last EDR Contact: 03/21/2022
Next Scheduled EDR Contact: 07/04/2022
Data Release Frequency: Quarterly

EPA WATCH LIST: EPA WATCH LIST

EPA maintains a "Watch List" to facilitate dialogue between EPA, state and local environmental agencies on enforcement matters relating to facilities with alleged violations identified as either significant or high priority. Being on the Watch List does not mean that the facility has actually violated the law only that an investigation by EPA or a state or local environmental agency has led those organizations to allege that an unproven violation has in fact occurred. Being on the Watch List does not represent a higher level of concern regarding the alleged violations that were detected, but instead indicates cases requiring additional dialogue between EPA, state and local agencies - primarily because of the length of time the alleged violation has gone unaddressed or unresolved.

Date of Government Version: 08/30/2013
Date Data Arrived at EDR: 03/21/2014
Date Made Active in Reports: 06/17/2014
Number of Days to Update: 88

Source: Environmental Protection Agency
Telephone: 617-520-3000
Last EDR Contact: 04/28/2022
Next Scheduled EDR Contact: 08/15/2022
Data Release Frequency: Quarterly

2020 COR ACTION: 2020 Corrective Action Program List

The EPA has set ambitious goals for the RCRA Corrective Action program by creating the 2020 Corrective Action Universe. This RCRA cleanup baseline includes facilities expected to need corrective action. The 2020 universe contains a wide variety of sites. Some properties are heavily contaminated while others were contaminated but have since been cleaned up. Still others have not been fully investigated yet, and may require little or no remediation. Inclusion in the 2020 Universe does not necessarily imply failure on the part of a facility to meet its RCRA obligations.

Date of Government Version: 09/30/2017
Date Data Arrived at EDR: 05/08/2018
Date Made Active in Reports: 07/20/2018
Number of Days to Update: 73

Source: Environmental Protection Agency
Telephone: 703-308-4044
Last EDR Contact: 05/06/2022
Next Scheduled EDR Contact: 08/15/2022
Data Release Frequency: Varies

TSCA: Toxic Substances Control Act

Toxic Substances Control Act. TSCA identifies manufacturers and importers of chemical substances included on the TSCA Chemical Substance Inventory list. It includes data on the production volume of these substances by plant site.

Date of Government Version: 12/31/2016
Date Data Arrived at EDR: 06/17/2020
Date Made Active in Reports: 09/10/2020
Number of Days to Update: 85

Source: EPA
Telephone: 202-260-5521
Last EDR Contact: 06/14/2022
Next Scheduled EDR Contact: 09/26/2022
Data Release Frequency: Every 4 Years

TRIS: Toxic Chemical Release Inventory System

Toxic Release Inventory System. TRIS identifies facilities which release toxic chemicals to the air, water and land in reportable quantities under SARA Title III Section 313.

Date of Government Version: 12/31/2018
Date Data Arrived at EDR: 08/14/2020
Date Made Active in Reports: 11/04/2020
Number of Days to Update: 82

Source: EPA
Telephone: 202-566-0250
Last EDR Contact: 05/20/2022
Next Scheduled EDR Contact: 08/29/2022
Data Release Frequency: Annually

SSTS: Section 7 Tracking Systems

Section 7 of the Federal Insecticide, Fungicide and Rodenticide Act, as amended (92 Stat. 829) requires all registered pesticide-producing establishments to submit a report to the Environmental Protection Agency by March 1st each year. Each establishment must report the types and amounts of pesticides, active ingredients and devices being produced, and those having been produced and sold or distributed in the past year.

Date of Government Version: 01/19/2022
Date Data Arrived at EDR: 01/19/2022
Date Made Active in Reports: 04/11/2022
Number of Days to Update: 82

Source: EPA
Telephone: 202-564-4203
Last EDR Contact: 04/20/2022
Next Scheduled EDR Contact: 08/01/2022
Data Release Frequency: Annually

ROD: Records Of Decision

Record of Decision. ROD documents mandate a permanent remedy at an NPL (Superfund) site containing technical and health information to aid in the cleanup.

Date of Government Version: 04/27/2022
Date Data Arrived at EDR: 05/05/2022
Date Made Active in Reports: 05/31/2022
Number of Days to Update: 26

Source: EPA
Telephone: 703-416-0223
Last EDR Contact: 06/01/2022
Next Scheduled EDR Contact: 09/12/2022
Data Release Frequency: Annually

RMP: Risk Management Plans

When Congress passed the Clean Air Act Amendments of 1990, it required EPA to publish regulations and guidance for chemical accident prevention at facilities using extremely hazardous substances. The Risk Management Program Rule (RMP Rule) was written to implement Section 112(r) of these amendments. The rule, which built upon existing industry codes and standards, requires companies of all sizes that use certain flammable and toxic substances to develop a Risk Management Program, which includes a(n): Hazard assessment that details the potential effects of an accidental release, an accident history of the last five years, and an evaluation of worst-case and alternative accidental releases; Prevention program that includes safety precautions and maintenance, monitoring, and employee training measures; and Emergency response program that spells out emergency health care, employee training measures and procedures for informing the public and response agencies (e.g the fire department) should an accident occur.

Date of Government Version: 04/27/2022
Date Data Arrived at EDR: 05/04/2022
Date Made Active in Reports: 05/10/2022
Number of Days to Update: 6

Source: Environmental Protection Agency
Telephone: 202-564-8600
Last EDR Contact: 04/18/2022
Next Scheduled EDR Contact: 08/01/2022
Data Release Frequency: Varies

RAATS: RCRA Administrative Action Tracking System

RCRA Administration Action Tracking System. RAATS contains records based on enforcement actions issued under RCRA pertaining to major violators and includes administrative and civil actions brought by the EPA. For administration actions after September 30, 1995, data entry in the RAATS database was discontinued. EPA will retain a copy of the database for historical records. It was necessary to terminate RAATS because a decrease in agency resources made it impossible to continue to update the information contained in the database.

Date of Government Version: 04/17/1995
Date Data Arrived at EDR: 07/03/1995
Date Made Active in Reports: 08/07/1995
Number of Days to Update: 35

Source: EPA
Telephone: 202-564-4104
Last EDR Contact: 06/02/2008
Next Scheduled EDR Contact: 09/01/2008
Data Release Frequency: No Update Planned

PRP: Potentially Responsible Parties

A listing of verified Potentially Responsible Parties

Date of Government Version: 01/25/2022
Date Data Arrived at EDR: 02/03/2022
Date Made Active in Reports: 02/25/2022
Number of Days to Update: 22

Source: EPA
Telephone: 202-564-6023
Last EDR Contact: 06/01/2022
Next Scheduled EDR Contact: 08/15/2022
Data Release Frequency: Quarterly

PADS: PCB Activity Database System

PCB Activity Database. PADS Identifies generators, transporters, commercial storers and/or brokers and disposers of PCB's who are required to notify the EPA of such activities.

Date of Government Version: 01/20/2022
Date Data Arrived at EDR: 01/20/2022
Date Made Active in Reports: 03/25/2022
Number of Days to Update: 64

Source: EPA
Telephone: 202-566-0500
Last EDR Contact: 04/08/2022
Next Scheduled EDR Contact: 07/18/2022
Data Release Frequency: Annually

ICIS: Integrated Compliance Information System
The Integrated Compliance Information System (ICIS) supports the information needs of the national enforcement and compliance program as well as the unique needs of the National Pollutant Discharge Elimination System (NPDES) program.

Date of Government Version: 11/18/2016
Date Data Arrived at EDR: 11/23/2016
Date Made Active in Reports: 02/10/2017
Number of Days to Update: 79

Source: Environmental Protection Agency
Telephone: 202-564-2501
Last EDR Contact: 03/31/2022
Next Scheduled EDR Contact: 07/18/2022
Data Release Frequency: Quarterly

FTTS: FIFRA/ TSCA Tracking System - FIFRA (Federal Insecticide, Fungicide, & Rodenticide Act)/TSCA (Toxic Substances Control Act)
FTTS tracks administrative cases and pesticide enforcement actions and compliance activities related to FIFRA, TSCA and EPCRA (Emergency Planning and Community Right-to-Know Act). To maintain currency, EDR contacts the Agency on a quarterly basis.

Date of Government Version: 04/09/2009
Date Data Arrived at EDR: 04/16/2009
Date Made Active in Reports: 05/11/2009
Number of Days to Update: 25

Source: EPA/Office of Prevention, Pesticides and Toxic Substances
Telephone: 202-566-1667
Last EDR Contact: 08/18/2017
Next Scheduled EDR Contact: 12/04/2017
Data Release Frequency: No Update Planned

FTTS INSP: FIFRA/ TSCA Tracking System - FIFRA (Federal Insecticide, Fungicide, & Rodenticide Act)/TSCA (Toxic Substances Control Act)
A listing of FIFRA/TSCA Tracking System (FTTS) inspections and enforcements.

Date of Government Version: 04/09/2009
Date Data Arrived at EDR: 04/16/2009
Date Made Active in Reports: 05/11/2009
Number of Days to Update: 25

Source: EPA
Telephone: 202-566-1667
Last EDR Contact: 08/18/2017
Next Scheduled EDR Contact: 12/04/2017
Data Release Frequency: No Update Planned

MLTS: Material Licensing Tracking System
MLTS is maintained by the Nuclear Regulatory Commission and contains a list of approximately 8,100 sites which possess or use radioactive materials and which are subject to NRC licensing requirements. To maintain currency, EDR contacts the Agency on a quarterly basis.

Date of Government Version: 03/11/2022
Date Data Arrived at EDR: 03/15/2022
Date Made Active in Reports: 06/14/2022
Number of Days to Update: 91

Source: Nuclear Regulatory Commission
Telephone: 301-415-7169
Last EDR Contact: 04/18/2022
Next Scheduled EDR Contact: 08/01/2022
Data Release Frequency: Quarterly

COAL ASH DOE: Steam-Electric Plant Operation Data
A listing of power plants that store ash in surface ponds.

Date of Government Version: 12/31/2020
Date Data Arrived at EDR: 11/30/2021
Date Made Active in Reports: 02/22/2022
Number of Days to Update: 84

Source: Department of Energy
Telephone: 202-586-8719
Last EDR Contact: 06/02/2022
Next Scheduled EDR Contact: 09/12/2022
Data Release Frequency: Varies

COAL ASH EPA: Coal Combustion Residues Surface Impoundments List
A listing of coal combustion residues surface impoundments with high hazard potential ratings.

Date of Government Version: 01/12/2017
Date Data Arrived at EDR: 03/05/2019
Date Made Active in Reports: 11/11/2019
Number of Days to Update: 251

Source: Environmental Protection Agency
Telephone: N/A
Last EDR Contact: 05/25/2022
Next Scheduled EDR Contact: 09/12/2022
Data Release Frequency: Varies

PCB TRANSFORMER: PCB Transformer Registration Database
The database of PCB transformer registrations that includes all PCB registration submittals.

Date of Government Version: 09/13/2019
Date Data Arrived at EDR: 11/06/2019
Date Made Active in Reports: 02/10/2020
Number of Days to Update: 96

Source: Environmental Protection Agency
Telephone: 202-566-0517
Last EDR Contact: 05/06/2022
Next Scheduled EDR Contact: 08/15/2022
Data Release Frequency: Varies

RADINFO: Radiation Information Database
The Radiation Information Database (RADINFO) contains information about facilities that are regulated by U.S. Environmental Protection Agency (EPA) regulations for radiation and radioactivity.

Date of Government Version: 07/01/2019
Date Data Arrived at EDR: 07/01/2019
Date Made Active in Reports: 09/23/2019
Number of Days to Update: 84

Source: Environmental Protection Agency
Telephone: 202-343-9775
Last EDR Contact: 03/28/2022
Next Scheduled EDR Contact: 07/11/2022
Data Release Frequency: Quarterly

HIST FTTS: FIFRA/TSCA Tracking System Administrative Case Listing
A complete administrative case listing from the FIFRA/TSCA Tracking System (FTTS) for all ten EPA regions. The information was obtained from the National Compliance Database (NCDB). NCDB supports the implementation of FIFRA (Federal Insecticide, Fungicide, and Rodenticide Act) and TSCA (Toxic Substances Control Act). Some EPA regions are now closing out records. Because of that, and the fact that some EPA regions are not providing EPA Headquarters with updated records, it was decided to create a HIST FTTS database. It included records that may not be included in the newer FTTS database updates. This database is no longer updated.

Date of Government Version: 10/19/2006
Date Data Arrived at EDR: 03/01/2007
Date Made Active in Reports: 04/10/2007
Number of Days to Update: 40

Source: Environmental Protection Agency
Telephone: 202-564-2501
Last EDR Contact: 12/17/2007
Next Scheduled EDR Contact: 03/17/2008
Data Release Frequency: No Update Planned

HIST FTTS INSP: FIFRA/TSCA Tracking System Inspection & Enforcement Case Listing
A complete inspection and enforcement case listing from the FIFRA/TSCA Tracking System (FTTS) for all ten EPA regions. The information was obtained from the National Compliance Database (NCDB). NCDB supports the implementation of FIFRA (Federal Insecticide, Fungicide, and Rodenticide Act) and TSCA (Toxic Substances Control Act). Some EPA regions are now closing out records. Because of that, and the fact that some EPA regions are not providing EPA Headquarters with updated records, it was decided to create a HIST FTTS database. It included records that may not be included in the newer FTTS database updates. This database is no longer updated.

Date of Government Version: 10/19/2006
Date Data Arrived at EDR: 03/01/2007
Date Made Active in Reports: 04/10/2007
Number of Days to Update: 40

Source: Environmental Protection Agency
Telephone: 202-564-2501
Last EDR Contact: 12/17/2008
Next Scheduled EDR Contact: 03/17/2008
Data Release Frequency: No Update Planned

DOT OPS: Incident and Accident Data
Department of Transporation, Office of Pipeline Safety Incident and Accident data.

Date of Government Version: 01/02/2020
Date Data Arrived at EDR: 01/28/2020
Date Made Active in Reports: 04/17/2020
Number of Days to Update: 80

Source: Department of Transporation, Office of Pipeline Safety
Telephone: 202-366-4595
Last EDR Contact: 04/26/2022
Next Scheduled EDR Contact: 08/08/2022
Data Release Frequency: Quarterly

CONSENT: Superfund (CERCLA) Consent Decrees
Major legal settlements that establish responsibility and standards for cleanup at NPL (Superfund) sites. Released periodically by United States District Courts after settlement by parties to litigation matters.

Date of Government Version: 12/31/2021
Date Data Arrived at EDR: 01/14/2022
Date Made Active in Reports: 03/25/2022
Number of Days to Update: 70

Source: Department of Justice, Consent Decree Library
Telephone: Varies
Last EDR Contact: 04/04/2022
Next Scheduled EDR Contact: 07/18/2022
Data Release Frequency: Varies

BRS: Biennial Reporting System

The Biennial Reporting System is a national system administered by the EPA that collects data on the generation and management of hazardous waste. BRS captures detailed data from two groups: Large Quantity Generators (LQG) and Treatment, Storage, and Disposal Facilities.

Date of Government Version: 12/31/2019
Date Data Arrived at EDR: 03/02/2022
Date Made Active in Reports: 03/25/2022
Number of Days to Update: 23

Source: EPA/NTIS
Telephone: 800-424-9346
Last EDR Contact: 03/02/2022
Next Scheduled EDR Contact: 07/04/2022
Data Release Frequency: Biennially

INDIAN RESERV: Indian Reservations

This map layer portrays Indian administered lands of the United States that have any area equal to or greater than 640 acres.

Date of Government Version: 12/31/2014
Date Data Arrived at EDR: 07/14/2015
Date Made Active in Reports: 01/10/2017
Number of Days to Update: 546

Source: USGS
Telephone: 202-208-3710
Last EDR Contact: 04/05/2022
Next Scheduled EDR Contact: 07/18/2022
Data Release Frequency: Semi-Annually

FUSRAP: Formerly Utilized Sites Remedial Action Program

DOE established the Formerly Utilized Sites Remedial Action Program (FUSRAP) in 1974 to remediate sites where radioactive contamination remained from Manhattan Project and early U.S. Atomic Energy Commission (AEC) operations.

Date of Government Version: 07/26/2021
Date Data Arrived at EDR: 07/27/2021
Date Made Active in Reports: 10/22/2021
Number of Days to Update: 87

Source: Department of Energy
Telephone: 202-586-3559
Last EDR Contact: 04/28/2022
Next Scheduled EDR Contact: 08/15/2022
Data Release Frequency: Varies

UMTRA: Uranium Mill Tailings Sites

Uranium ore was mined by private companies for federal government use in national defense programs. When the mills shut down, large piles of the sand-like material (mill tailings) remain after uranium has been extracted from the ore. Levels of human exposure to radioactive materials from the piles are low; however, in some cases tailings were used as construction materials before the potential health hazards of the tailings were recognized.

Date of Government Version: 08/30/2019
Date Data Arrived at EDR: 11/15/2019
Date Made Active in Reports: 01/28/2020
Number of Days to Update: 74

Source: Department of Energy
Telephone: 505-845-0011
Last EDR Contact: 05/16/2022
Next Scheduled EDR Contact: 08/29/2022
Data Release Frequency: Varies

LEAD SMELTER 1: Lead Smelter Sites

A listing of former lead smelter site locations.

Date of Government Version: 04/27/2022
Date Data Arrived at EDR: 05/05/2022
Date Made Active in Reports: 05/31/2022
Number of Days to Update: 26

Source: Environmental Protection Agency
Telephone: 703-603-8787
Last EDR Contact: 09/01/2022
Next Scheduled EDR Contact: 07/11/2022
Data Release Frequency: Varies

LEAD SMELTER 2: Lead Smelter Sites

A list of several hundred sites in the U.S. where secondary lead smelting was done from 1931and 1964. These sites may pose a threat to public health through ingestion or inhalation of contaminated soil or dust

Date of Government Version: 04/05/2001
Date Data Arrived at EDR: 10/27/2010
Date Made Active in Reports: 12/02/2010
Number of Days to Update: 36

Source: American Journal of Public Health
Telephone: 703-305-6451
Last EDR Contact: 12/02/2009
Next Scheduled EDR Contact: N/A
Data Release Frequency: No Update Planned

US AIRS (AFS): Aerometric Information Retrieval System Facility Subsystem (AFS)

The database is a sub-system of Aerometric Information Retrieval System (AIRS). AFS contains compliance data on air pollution point sources regulated by the U.S. EPA and/or state and local air regulatory agencies. This information comes from source reports by various stationary sources of air pollution, such as electric power plants, steel mills, factories, and universities, and provides information about the air pollutants they produce. Action, air program, air program pollutant, and general level plant data. It is used to track emissions and compliance data from industrial plants.

Date of Government Version: 10/12/2016
Date Data Arrived at EDR: 10/26/2016
Date Made Active in Reports: 02/03/2017
Number of Days to Update: 100

Source: EPA
Telephone: 202-564-2496
Last EDR Contact: 09/26/2017
Next Scheduled EDR Contact: 01/08/2018
Data Release Frequency: Annually

US AIRS MINOR: Air Facility System Data

A listing of minor source facilities.

Date of Government Version: 10/12/2016
Date Data Arrived at EDR: 10/26/2016
Date Made Active in Reports: 02/03/2017
Number of Days to Update: 100

Source: EPA
Telephone: 202-564-2496
Last EDR Contact: 09/26/2017
Next Scheduled EDR Contact: 01/08/2018
Data Release Frequency: Annually

MINES VIOLATIONS: MSHA Violation Assessment Data

Mines violation and assessment information. Department of Labor, Mine Safety & Health Administration.

Date of Government Version: 03/21/2022
Date Data Arrived at EDR: 03/22/2022
Date Made Active in Reports: 03/25/2022
Number of Days to Update: 3

Source: DOL, Mine Safety & Health Admi
Telephone: 202-693-9424
Last EDR Contact: 05/26/2022
Next Scheduled EDR Contact: 09/12/2022
Data Release Frequency: Quarterly

US MINES: Mines Master Index File

Contains all mine identification numbers issued for mines active or opened since 1971. The data also includes violation information.

Date of Government Version: 02/01/2022
Date Data Arrived at EDR: 02/23/2022
Date Made Active in Reports: 05/24/2022
Number of Days to Update: 90

Source: Department of Labor, Mine Safety and Health Administration
Telephone: 303-231-5959
Last EDR Contact: 05/25/2022
Next Scheduled EDR Contact: 09/05/2022
Data Release Frequency: Semi-Annually

US MINES 2: Ferrous and Nonferrous Metal Mines Database Listing

This map layer includes ferrous (ferrous metal mines are facilities that extract ferrous metals, such as iron ore or molybdenum) and nonferrous (Nonferrous metal mines are facilities that extract nonferrous metals, such as gold, silver, copper, zinc, and lead) metal mines in the United States.

Date of Government Version: 05/06/2020
Date Data Arrived at EDR: 05/27/2020
Date Made Active in Reports: 08/13/2020
Number of Days to Update: 78

Source: USGS
Telephone: 703-648-7709
Last EDR Contact: 05/27/2022
Next Scheduled EDR Contact: 09/05/2022
Data Release Frequency: Varies

US MINES 3: Active Mines & Mineral Plants Database Listing

Active Mines and Mineral Processing Plant operations for commodities monitored by the Minerals Information Team of the USGS.

Date of Government Version: 04/14/2011
Date Data Arrived at EDR: 06/08/2011
Date Made Active in Reports: 09/13/2011
Number of Days to Update: 97

Source: USGS
Telephone: 703-648-7709
Last EDR Contact: 05/27/2022
Next Scheduled EDR Contact: 09/05/2022
Data Release Frequency: Varies

ABANDONED MINES: Abandoned Mines

An inventory of land and water impacted by past mining (primarily coal mining) is maintained by OSMRE to provide information needed to implement the Surface Mining Control and Reclamation Act of 1977 (SMCRA). The inventory contains information on the location, type, and extent of AML impacts, as well as, information on the cost associated with the reclamation of those problems. The inventory is based upon field surveys by State, Tribal, and OSMRE program officials. It is dynamic to the extent that it is modified as new problems are identified and existing problems are reclaimed.

Date of Government Version: 03/10/2022
Date Data Arrived at EDR: 03/10/2022
Date Made Active in Reports: 06/14/2022
Number of Days to Update: 96

Source: Department of Interior
Telephone: 202-208-2609
Last EDR Contact: 06/14/2022
Next Scheduled EDR Contact: 09/19/2022
Data Release Frequency: Quarterly

FINDS: Facility Index System/Facility Registry System

Facility Index System. FINDS contains both facility information and 'pointers' to other sources that contain more detail. EDR includes the following FINDS databases in this report: PCS (Permit Compliance System), AIRS (Aerometric Information Retrieval System), DOCKET (Enforcement Docket used to manage and track information on civil judicial enforcement cases for all environmental statutes), FURS (Federal Underground Injection Control), C-DOCKET (Criminal Docket System used to track criminal enforcement actions for all environmental statutes), FFIS (Federal Facilities Information System), STATE (State Environmental Laws and Statutes), and PADS (PCB Activity Data System).

Date of Government Version: 05/13/2022
Date Data Arrived at EDR: 05/18/2022
Date Made Active in Reports: 05/31/2022
Number of Days to Update: 13

Source: EPA
Telephone: (215) 814-5000
Last EDR Contact: 05/18/2022
Next Scheduled EDR Contact: 09/12/2022
Data Release Frequency: Quarterly

DOCKET HWC: Hazardous Waste Compliance Docket Listing

A complete list of the Federal Agency Hazardous Waste Compliance Docket Facilities.

Date of Government Version: 05/06/2021
Date Data Arrived at EDR: 05/21/2021
Date Made Active in Reports: 08/11/2021
Number of Days to Update: 82

Source: Environmental Protection Agency
Telephone: 202-564-0527
Last EDR Contact: 05/19/2022
Next Scheduled EDR Contact: 09/05/2022
Data Release Frequency: Varies

UXO: Unexploded Ordnance Sites

A listing of unexploded ordnance site locations

Date of Government Version: 12/31/2020
Date Data Arrived at EDR: 01/11/2022
Date Made Active in Reports: 02/14/2022
Number of Days to Update: 34

Source: Department of Defense
Telephone: 703-704-1564
Last EDR Contact: 04/12/2022
Next Scheduled EDR Contact: 07/25/2022
Data Release Frequency: Varies

ECHO: Enforcement & Compliance History Information

ECHO provides integrated compliance and enforcement information for about 800,000 regulated facilities nationwide.

Date of Government Version: 01/01/2022
Date Data Arrived at EDR: 01/04/2022
Date Made Active in Reports: 01/10/2022
Number of Days to Update: 6

Source: Environmental Protection Agency
Telephone: 202-564-2280
Last EDR Contact: 04/05/2022
Next Scheduled EDR Contact: 07/18/2022
Data Release Frequency: Quarterly

FUELS PROGRAM: EPA Fuels Program Registered Listing

This listing includes facilities that are registered under the Part 80 (Code of Federal Regulations) EPA Fuels Programs. All companies now are required to submit new and updated registrations.

Date of Government Version: 02/17/2022
Date Data Arrived at EDR: 02/17/2022
Date Made Active in Reports: 05/10/2022
Number of Days to Update: 82

Source: EPA
Telephone: 800-385-6164
Last EDR Contact: 05/17/2022
Next Scheduled EDR Contact: 08/29/2022
Data Release Frequency: Quarterly

AIRS: Permitted Airs Facility List

A listing of permitted Airs facilities.

Date of Government Version: 12/15/2021
Date Data Arrived at EDR: 12/16/2021
Date Made Active in Reports: 03/11/2022
Number of Days to Update: 85

Source: Department of Environmental Quality
Telephone: 804-698-4000
Last EDR Contact: 06/09/2022
Next Scheduled EDR Contact: 09/26/2022
Data Release Frequency: Annually

CEDS: Comprehensive Environmental Data System

Virginia Water Protection Permits, Virginia Pollution Discharge System (point discharge) permits and Virginia Pollution Abatement (no point discharge) permits.

Date of Government Version: 05/31/2022
Date Data Arrived at EDR: 06/01/2022
Date Made Active in Reports: 06/13/2022
Number of Days to Update: 12

Source: Department of Environmental Quality
Telephone: 804-698-4077
Last EDR Contact: 05/26/2022
Next Scheduled EDR Contact: 09/12/2022
Data Release Frequency: Quarterly

COAL ASH: Coal Ash Disposal Sites

A listing of facilities with coal ash impoundments.

Date of Government Version: 12/31/2020
Date Data Arrived at EDR: 05/26/2021
Date Made Active in Reports: 08/18/2021
Number of Days to Update: 84

Source: Department of Environmental Protection
Telephone: 804-698-4285
Last EDR Contact: 05/26/2022
Next Scheduled EDR Contact: 09/12/2022
Data Release Frequency: Varies

DRYCLEANERS: Drycleaner List

A listing of registered drycleaners.

Date of Government Version: 04/11/2022
Date Data Arrived at EDR: 04/12/2022
Date Made Active in Reports: 04/13/2022
Number of Days to Update: 1

Source: Department of Environmental Quality
Telephone: 804-698-4407
Last EDR Contact: 04/04/2022
Next Scheduled EDR Contact: 07/18/2022
Data Release Frequency: Varies

ENFORCEMENT: Enforcement Actions Data

A listing of enforcement actions.

Date of Government Version: 12/28/2021
Date Data Arrived at EDR: 01/06/2022
Date Made Active in Reports: 02/23/2022
Number of Days to Update: 48

Source: Department of Environmental Quality
Telephone: 804-698-4031
Last EDR Contact: 03/28/2022
Next Scheduled EDR Contact: 07/11/2022
Data Release Frequency: Quarterly

GOVERNMENT RECORDS SEARCHED / DATA CURRENCY TRACKING

Financial Assurance 1: Financial Assurance Information Listing

A listing of financial assurance information for underground storage tank facilities. Financial assurance is intended to ensure that resources are available to pay for the cost of closure, post-closure care, and corrective measures if the owner or operator of a regulated facility is unable or unwilling to pay.

Date of Government Version: 10/25/2021
Date Data Arrived at EDR: 10/28/2021
Date Made Active in Reports: 01/19/2022
Number of Days to Update: 83

Source: Department of Environmental Quality
Telephone: 804-698-4205
Last EDR Contact: 04/18/2022
Next Scheduled EDR Contact: 08/08/2022
Data Release Frequency: Varies

Financial Assurance 2: Financial Assurance Information listing

Solid waste financial assurance information.

Date of Government Version: 01/26/2022
Date Data Arrived at EDR: 01/28/2022
Date Made Active in Reports: 01/31/2022
Number of Days to Update: 3

Source: Department of Environmental Quality
Telephone: 804-698-4123
Last EDR Contact: 04/25/2022
Next Scheduled EDR Contact: 08/08/2022
Data Release Frequency: Varies

TIER 2: Tier 2 Information Listing

A listing of facilities which store or manufacture hazardous materials and submit a chemical inventory report.

Date of Government Version: 12/31/2019
Date Data Arrived at EDR: 01/04/2022
Date Made Active in Reports: 03/21/2022
Number of Days to Update: 76

Source: Department of Environmental Quality
Telephone: 804-698-4159
Last EDR Contact: 06/09/2022
Next Scheduled EDR Contact: 09/26/2022
Data Release Frequency: No Update Planned

UIC: Underground Injection Control Wells

A listing of underground injection controls wells.

Date of Government Version: 10/26/2021
Date Data Arrived at EDR: 10/27/2021
Date Made Active in Reports: 01/19/2022
Number of Days to Update: 84

Source: Department of Mines, Minerals and Energy
Telephone: 276-415-9700
Last EDR Contact: 04/20/2022
Next Scheduled EDR Contact: 08/08/2022
Data Release Frequency: Quarterly

PCS INACTIVE: Listing of Inactive PCS Permits

An inactive permit is a facility that has shut down or is no longer discharging.

Date of Government Version: 11/05/2014
Date Data Arrived at EDR: 01/06/2015
Date Made Active in Reports: 05/06/2015
Number of Days to Update: 120

Source: EPA
Telephone: 202-564-2496
Last EDR Contact: 03/31/2022
Next Scheduled EDR Contact: 07/18/2022
Data Release Frequency: Semi-Annually

MINES MRDS: Mineral Resources Data System

Mineral Resources Data System

Date of Government Version: 04/06/2018
Date Data Arrived at EDR: 10/21/2019
Date Made Active in Reports: 10/24/2019
Number of Days to Update: 3

Source: USGS
Telephone: 703-648-6533
Last EDR Contact: 05/27/2022
Next Scheduled EDR Contact: 09/05/2022
Data Release Frequency: Varies

PCS: Permit Compliance System

PCS is a computerized management information system that contains data on National Pollutant Discharge Elimination System (NPDES) permit holding facilities. PCS tracks the permit, compliance, and enforcement status of NPDES facilities.

Date of Government Version: 07/14/2011
Date Data Arrived at EDR: 08/05/2011
Date Made Active in Reports: 09/29/2011
Number of Days to Update: 55

Source: EPA, Office of Water
Telephone: 202-564-2496
Last EDR Contact: 03/31/2022
Next Scheduled EDR Contact: 07/18/2022
Data Release Frequency: Semi-Annually

PCS ENF: Enforcement data
No description is available for this data

Date of Government Version: 12/31/2014
Date Data Arrived at EDR: 02/05/2015
Date Made Active in Reports: 03/06/2015
Number of Days to Update: 29

Source: EPA
Telephone: 202-564-2497
Last EDR Contact: 03/31/2022
Next Scheduled EDR Contact: 07/18/2022
Data Release Frequency: Varies

EDR HIGH RISK HISTORICAL RECORDS

EDR Exclusive Records

EDR MGP: EDR Proprietary Manufactured Gas Plants
The EDR Proprietary Manufactured Gas Plant Database includes records of coal gas plants (manufactured gas plants) compiled by EDR's researchers. Manufactured gas sites were used in the United States from the 1800's to 1950's to produce a gas that could be distributed and used as fuel. These plants used whale oil, rosin, coal, or a mixture of coal, oil, and water that also produced a significant amount of waste. Many of the byproducts of the gas production, such as coal tar (oily waste containing volatile and non-volatile chemicals), sludges, oils and other compounds are potentially hazardous to human health and the environment. The byproduct from this process was frequently disposed of directly at the plant site and can remain or spread slowly, serving as a continuous source of soil and groundwater contamination.

Date of Government Version: N/A
Date Data Arrived at EDR: N/A
Date Made Active in Reports: N/A
Number of Days to Update: N/A

Source: EDR, Inc.
Telephone: N/A
Last EDR Contact: N/A
Next Scheduled EDR Contact: N/A
Data Release Frequency: No Update Planned

EDR Hist Auto: EDR Exclusive Historical Auto Stations
EDR has searched selected national collections of business directories and has collected listings of potential gas station/filling station/service station sites that were available to EDR researchers. EDR's review was limited to those categories of sources that might, in EDR's opinion, include gas station/filling station/service station establishments. The categories reviewed included, but were not limited to gas, gas station, gasoline station, filling station, auto, automobile repair, auto service station, service station, etc. This database falls within a category of information EDR classifies as "High Risk Historical Records", or HRHR. EDR's HRHR effort presents unique and sometimes proprietary data about past sites and operations that typically create environmental concerns, but may not show up in current government records searches.

Date of Government Version: N/A
Date Data Arrived at EDR: N/A
Date Made Active in Reports: N/A
Number of Days to Update: N/A

Source: EDR, Inc.
Telephone: N/A
Last EDR Contact: N/A
Next Scheduled EDR Contact: N/A
Data Release Frequency: Varies

EDR Hist Cleaner: EDR Exclusive Historical Cleaners
EDR has searched selected national collections of business directories and has collected listings of potential dry cleaner sites that were available to EDR researchers. EDR's review was limited to those categories of sources that might, in EDR's opinion, include dry cleaning establishments. The categories reviewed included, but were not limited to dry cleaners, cleaners, laundry, laundromat, cleaning/laundry, wash & dry etc. This database falls within a category of information EDR classifies as "High Risk Historical Records", or HRHR. EDR's HRHR effort presents unique and sometimes proprietary data about past sites and operations that typically create environmental concerns, but may not show up in current government records searches.

Date of Government Version: N/A
Date Data Arrived at EDR: N/A
Date Made Active in Reports: N/A
Number of Days to Update: N/A

Source: EDR, Inc.
Telephone: N/A
Last EDR Contact: N/A
Next Scheduled EDR Contact: N/A
Data Release Frequency: Varies

EDR RECOVERED GOVERNMENT ARCHIVES

Exclusive Recovered Govt. Archives

RGA LF: Recovered Government Archive Solid Waste Facilities List
The EDR Recovered Government Archive Landfill database provides a list of landfills derived from historical databases and includes many records that no longer appear in current government lists. Compiled from Records formerly available from the Department of Environmental Quality in Virgina.

Date of Government Version: N/A
Date Data Arrived at EDR: 07/01/2013
Date Made Active in Reports: 01/20/2014
Number of Days to Update: 203

Source: Department of Environmental Quality
Telephone: N/A
Last EDR Contact: 06/01/2012
Next Scheduled EDR Contact: N/A
Data Release Frequency: Varies

RGA LUST: Recovered Government Archive Leaking Underground Storage Tank
The EDR Recovered Government Archive Leaking Underground Storage Tank database provides a list of LUST incidents derived from historical databases and includes many records that no longer appear in current government lists. Compiled from Records formerly available from the Department of Environmental Quality in Virgina and at the Regional VA Levels.

Date of Government Version: N/A
Date Data Arrived at EDR: 07/01/2013
Date Made Active in Reports: 01/15/2014
Number of Days to Update: 198

Source: Department of Environmental Quality
Telephone: N/A
Last EDR Contact: 06/01/2012
Next Scheduled EDR Contact: N/A
Data Release Frequency: Varies

OTHER DATABASE(S)

Depending on the geographic area covered by this report, the data provided in these specialty databases may or may not be complete. For example, the existence of wetlands information data in a specific report does not mean that all wetlands in the area covered by the report are included. Moreover, the absence of any reported wetlands information does not necessarily mean that wetlands do not exist in the area covered by the report.

Oil/Gas Pipelines
Source: Endeavor Business Media
Petroleum Bundle (Crude Oil, Refined Products, Petrochemicals, Gas Liquids (LPG/NGL), and Specialty Gases (Miscellaneous)) N = Natural Gas Bundle (Natural Gas, Gas Liquids (LPG/NGL), and Specialty Gases (Miscellaneous)). This map includes information copyrighted by Endeavor Business Media. This information is provided on a best effort basis and Endeavor Business Media does not guarantee its accuracy nor warrant its fitness for any particular purpose. Such information has been reprinted with the permission of Endeavor Business Media.

Electric Power Transmission Line Data
Source: Endeavor Business Media
This map includes information copyrighted by Endeavor Business Media. This information is provided on a best effort basis and Endeavor Business Media does not guarantee its accuracy nor warrant its fitness for any particular purpose. Such information has been reprinted with the permission of Endeavor Business Media.

Sensitive Receptors: There are individuals deemed sensitive receptors due to their fragile immune systems and special sensitivity to environmental discharges. These sensitive receptors typically include the elderly, the sick, and children. While the location of all sensitive receptors cannot be determined, EDR indicates those buildings and facilities - schools, daycares, hospitals, medical centers, and nursing homes - where individuals who are sensitive receptors are likely to be located.

AHA Hospitals:
Source: American Hospital Association, Inc.
Telephone: 312-280-5991
The database includes a listing of hospitals based on the American Hospital Association's annual survey of hospitals.

Medical Centers: Provider of Services Listing
Source: Centers for Medicare & Medicaid Services
Telephone: 410-786-3000
A listing of hospitals with Medicare provider number, produced by Centers of Medicare & Medicaid Services, a federal agency within the U.S. Department of Health and Human Services.

Nursing Homes
Source: National Institutes of Health
Telephone: 301-594-6248
Information on Medicare and Medicaid certified nursing homes in the United States.

Public Schools
Source: National Center for Education Statistics
Telephone: 202-502-7300
The National Center for Education Statistics' primary database on elementary and secondary public education in the United States. It is a comprehensive, annual, national statistical database of all public elementary and secondary schools and school districts, which contains data that are comparable across all states.

Private Schools
Source: National Center for Education Statistics
Telephone: 202-502-7300
The National Center for Education Statistics' primary database on private school locations in the United States.

Daycare Centers: Licensed Facilities
Source: Department of Social Services
Telephone: 804-692-1900

Flood Zone Data: This data was obtained from the Federal Emergency Management Agency (FEMA). It depicts 100-year and 500-year flood zones as defined by FEMA. It includes the National Flood Hazard Layer (NFHL) which incorporates Flood Insurance Rate Map (FIRM) data and Q3 data from FEMA in areas not covered by NFHL.
Source: FEMA
Telephone: 877-336-2627
Date of Government Version: 2003, 2015

NWI: National Wetlands Inventory. This data, available in select counties across the country, was obtained by EDR in 2002, 2005 and 2010 from the U.S. Fish and Wildlife Service.

Current USGS 7.5 Minute Topographic Map
Source: U.S. Geological Survey

STREET AND ADDRESS INFORMATION

Â© 2015 TomTom North America, Inc. All rights reserved. This material is proprietary and the subject of copyright protection and other intellectual property rights owned by or licensed to Tele Atlas North America, Inc. The use of this material is subject to the terms of a license agreement. You will be held liable for any unauthorized copying or disclosure of this material.

GEOCHECK ®- PHYSICAL SETTING SOURCE ADDENDUM

TARGET PROPERTY ADDRESS

HARTMAN AVE PUMP STATION
HARTMAN AVE
ONANCOCK, VA 23417

TARGET PROPERTY COORDINATES

Latitude (North):	37.706922 - 37ˆ 42’ 24.92’’
Longitude (West):	75.736337 - 75ˆ 44’ 10.81’’
Universal Tranverse Mercator:	Zone 18
UTM X (Meters):	435093.1
UTM Y (Meters):	4173348.2
Elevation:	17 ft. above sea level

USGS TOPOGRAPHIC MAP

Target Property Map:	13861795 ACCOMAC, VA
Version Date:	2019
West Map:	13861833 PUNGOTEAGUE, VA
Version Date:	2019

EDR’s GeoCheck Physical Setting Source Addendum is provided to assist the environmental professional in forming an opinion about the impact of potential contaminant migration.

Assessment of the impact of contaminant migration generally has two principle investigative components:

1. Groundwater flow direction, and
2. Groundwater flow velocity.

Groundwater flow direction may be impacted by surface topography, hydrology, hydrogeology, characteristics of the soil, and nearby wells. Groundwater flow velocity is generally impacted by the nature of the geologic strata.

GEOCHECK® - PHYSICAL SETTING SOURCE SUMMARY

GROUNDWATER FLOW DIRECTION INFORMATION

Groundwater flow direction for a particular site is best determined by a qualified environmental professional using site-specific well data. If such data is not reasonably ascertainable, it may be necessary to rely on other sources of information, such as surface topographic information, hydrologic information, hydrogeologic data collected on nearby properties, and regional groundwater flow information (from deep aquifers).

TOPOGRAPHIC INFORMATION

Surface topography may be indicative of the direction of surficial groundwater flow. This information can be used to assist the environmental professional in forming an opinion about the impact of nearby contaminated properties or, should contamination exist on the target property, what downgradient sites might be impacted.

TARGET PROPERTY TOPOGRAPHY

General Topographic Gradient: General West

SURROUNDING TOPOGRAPHY: ELEVATION PROFILES

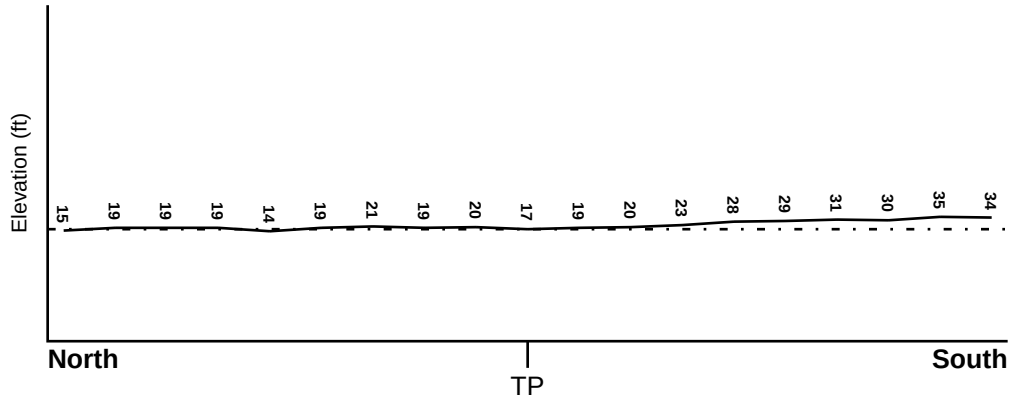

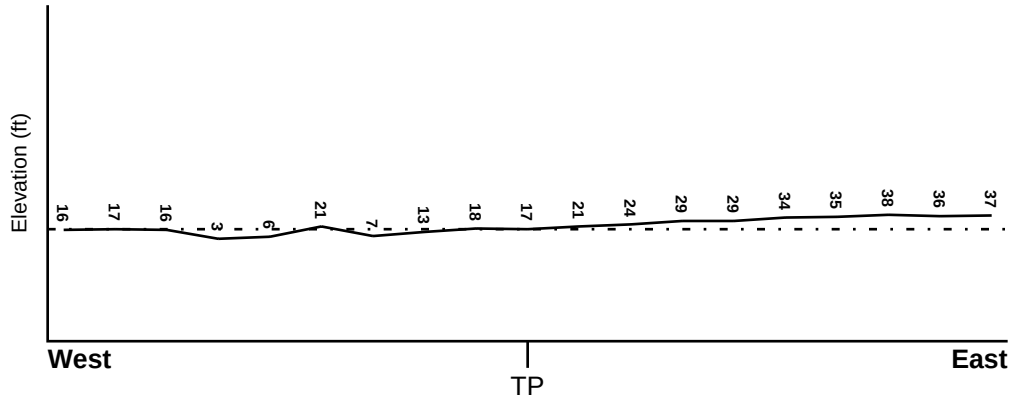

Target Property Elevation: 17 ft.

0 1/2 1 Miles

Source: Topography has been determined from the USGS 7.5' Digital Elevation Model and should be evaluated on a relative (not an absolute) basis. Relative elevation information between sites of close proximity should be field verified.

GEOCHECK® - PHYSICAL SETTING SOURCE SUMMARY

HYDROLOGIC INFORMATION

Surface water can act as a hydrologic barrier to groundwater flow. Such hydrologic information can be used to assist the environmental professional in forming an opinion about the impact of nearby contaminated properties or, should contamination exist on the target property, what downgradient sites might be impacted.

Refer to the Physical Setting Source Map following this summary for hydrologic information (major waterways and bodies of water).

FEMA FLOOD ZONE

Flood Plain Panel at Target Property	FEMA Source Type
51001C0630G	FEMA FIRM Flood data

Additional Panels in search area:	FEMA Source Type
51001C0610G	FEMA FIRM Flood data

NATIONAL WETLAND INVENTORY

NWI Quad at Target Property	NWI Electronic Data Coverage
ACCOMAC	YES - refer to the Overview Map and Detail Map

HYDROGEOLOGIC INFORMATION

Hydrogeologic information obtained by installation of wells on a specific site can often be an indicator of groundwater flow direction in the immediate area. Such hydrogeologic information can be used to assist the environmental professional in forming an opinion about the impact of nearby contaminated properties or, should contamination exist on the target property, what downgradient sites might be impacted.

Site-Specific Hydrogeological Data*:

Search Radius:	1.25 miles
Status:	Not found

AQUIFLOW®

Search Radius: 1.000 Mile.

EDR has developed the AQUIFLOW Information System to provide data on the general direction of groundwater flow at specific points. EDR has reviewed reports submitted by environmental professionals to regulatory authorities at select sites and has extracted the date of the report, groundwater flow direction as determined hydrogeologically, and the depth to water table.

MAP ID	LOCATION FROM TP	GENERAL DIRECTION GROUNDWATER FLOW
Not Reported		

* ©1996 Site−specific hydrogeological data gathered by CERCLIS Alerts, Inc., Bainbridge Island, WA. All rights reserved. All of the information and opinions presented are those of the cited EPA report(s), which were completed under a Comprehensive Environmental Response Compensation and Liability Information System (CERCLIS) investigation.

GEOCHECK® - PHYSICAL SETTING SOURCE SUMMARY

GROUNDWATER FLOW VELOCITY INFORMATION

Groundwater flow velocity information for a particular site is best determined by a qualified environmental professional using site specific geologic and soil strata data. If such data are not reasonably ascertainable, it may be necessary to rely on other sources of information, including geologic age identification, rock stratigraphic unit and soil characteristics data collected on nearby properties and regional soil information. In general, contaminant plumes move more quickly through sandy-gravelly types of soils than silty-clayey types of soils.

GEOLOGIC INFORMATION IN GENERAL AREA OF TARGET PROPERTY

Geologic information can be used by the environmental professional in forming an opinion about the relative speed at which contaminant migration may be occurring.

ROCK STRATIGRAPHIC UNIT

Era:	Cenozoic
System:	Quaternary
Series:	Pleistocene
Code:	Qp *(decoded above as Era, System & Series)*

GEOLOGIC AGE IDENTIFICATION

Category: Stratifed Sequence

Geologic Age and Rock Stratigraphic Unit Source: P.G. Schruben, R.E. Arndt and W.J. Bawiec, Geology of the Conterminous U.S. at 1:2,500,000 Scale - a digital representation of the 1974 P.B. King and H.M. Beikman Map, USGS Digital Data Series DDS - 11 (1994).

SSURGO SOIL MAP - 7025287.2s

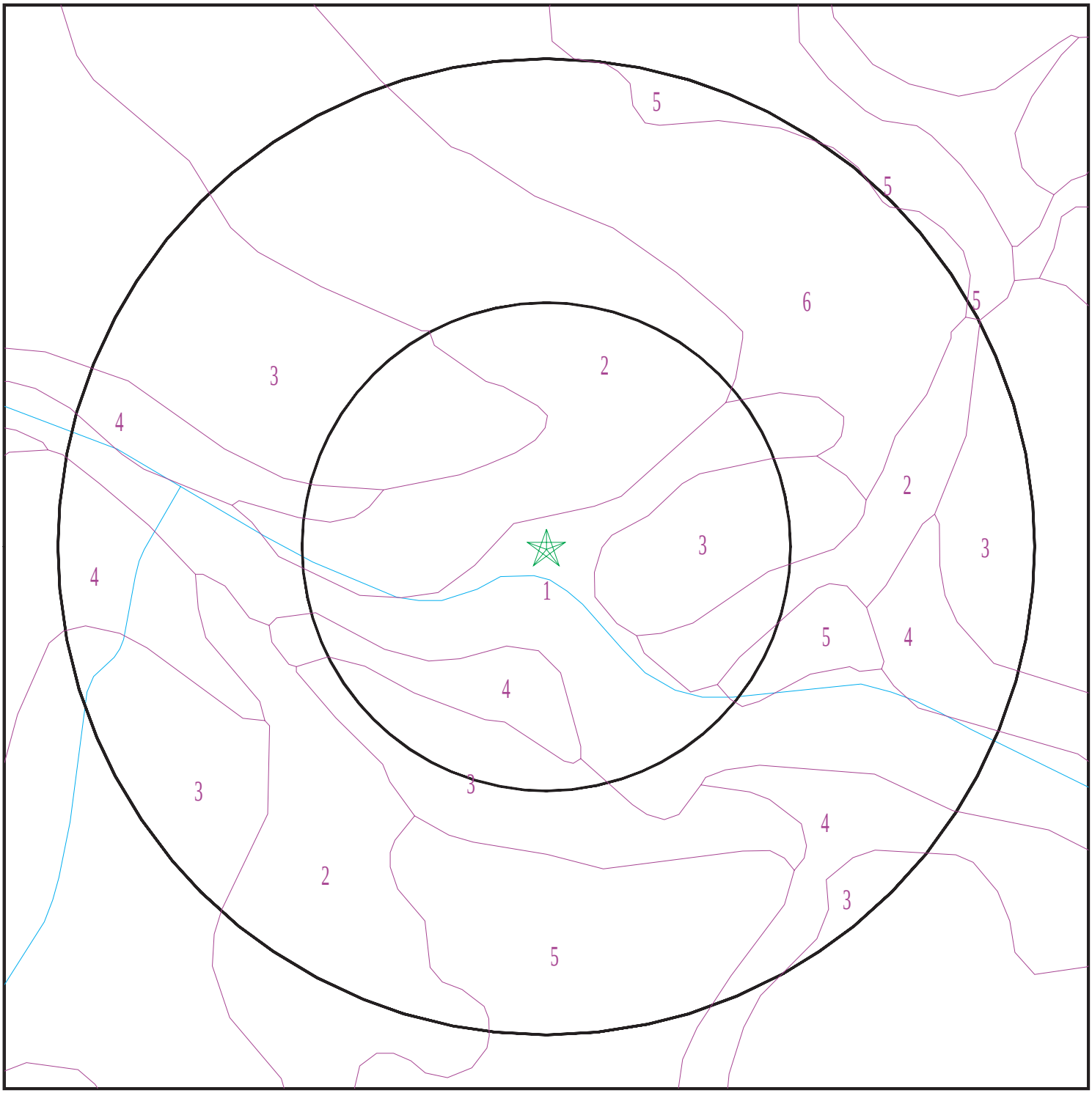

Target Property
SSURGO Soil
Water

0 1/16 1/8 1/4 Miles

N

SITE NAME: Hartman Ave Pump Station ADDRESS: Hartman Ave Onancock VA 23417 LAT/LONG: 37.706922 / 75.736337	CLIENT: AECOM CONTACT: Justin Derato INQUIRY #: 7025287.2s DATE: June 21, 2022 11:14 am

Copyright © 2022 EDR, Inc. © 2015 TomTom Rel. 2015.

GEOCHECK® - PHYSICAL SETTING SOURCE SUMMARY

DOMINANT SOIL COMPOSITION IN GENERAL AREA OF TARGET PROPERTY

The U.S. Department of Agriculture's (USDA) Soil Conservation Service (SCS) leads the National Cooperative Soil Survey (NCSS) and is responsible for collecting, storing, maintaining and distributing soil survey information for privately owned lands in the United States. A soil map in a soil survey is a representation of soil patterns in a landscape. The following information is based on Soil Conservation Service SSURGO data.

Soil Map ID: 1

Soil Component Name: Polawana

Soil Surface Texture: mucky sandy loam

Hydrologic Group: Class A/D - Drained/undrained hydrology class of soils that can be drained and are classified.

Soil Drainage Class: Very poorly drained

Hydric Status: All hydric

Corrosion Potential - Uncoated Steel: High

Depth to Bedrock Min: > 0 inches

Depth to Watertable Min: > 0 inches

Soil Layer Information							
	Boundary			Classification		Saturated hydraulic conductivity micro m/sec	Soil Reaction (pH)
Layer	Upper	Lower	Soil Texture Class	AASHTO Group	Unified Soil		
1	0 inches	22 inches	mucky sandy loam	Silt-Clay Materials (more than 35 pct. passing No. 200), Silty Soils.	COARSE-GRAINED SOILS, Sands, Sands with fines, Silty Sand.	Max: 141 Min: 42	Max: 7.3 Min: 4.5
2	22 inches	85 inches	loamy fine sand	Silt-Clay Materials (more than 35 pct. passing No. 200), Silty Soils.	COARSE-GRAINED SOILS, Sands, Sands with fines, Silty Sand.	Max: 141 Min: 42	Max: 7.3 Min: 4.5

Soil Map ID: 2

Soil Component Name: Munden

Soil Surface Texture: sandy loam

Hydrologic Group: Class B - Moderate infiltration rates. Deep and moderately deep, moderately well and well drained soils with moderately coarse textures.

Soil Drainage Class: Moderately well drained

Hydric Status: Partially hydric

Corrosion Potential - Uncoated Steel: Low

Depth to Bedrock Min: > 0 inches

Depth to Watertable Min: > 61 inches

Soil Layer Information							
	Boundary			Classification		Saturated hydraulic conductivity micro m/sec	Soil Reaction (pH)
Layer	Upper	Lower	Soil Texture Class	AASHTO Group	Unified Soil		
1	0 inches	7 inches	sandy loam	Granular materials (35 pct. or less passing No. 200), Silty, or Clayey Gravel and Sand.	COARSE-GRAINED SOILS, Sands, Sands with fines, Clayey sand. COARSE-GRAINED SOILS, Sands, Sands with fines, Silty Sand.	Max: 141 Min: 14	Max: 6 Min: 4.5
2	7 inches	40 inches	sandy loam	Granular materials (35 pct. or less passing No. 200), Silty, or Clayey Gravel and Sand.	COARSE-GRAINED SOILS, Sands, Sands with fines, Clayey sand. COARSE-GRAINED SOILS, Sands, Sands with fines, Silty Sand.	Max: 141 Min: 14	Max: 6 Min: 4.5
3	40 inches	85 inches	loamy sand	Granular materials (35 pct. or less passing No. 200), Silty, or Clayey Gravel and Sand.	COARSE-GRAINED SOILS, Sands, Sands with fines, Clayey sand. COARSE-GRAINED SOILS, Sands, Sands with fines, Silty Sand.	Max: 141 Min: 14	Max: 6 Min: 4.5

Soil Map ID: 3

Soil Component Name: Bojac

Soil Surface Texture: sandy loam

Hydrologic Group: Class B - Moderate infiltration rates. Deep and moderately deep, moderately well and well drained soils with moderately coarse textures.

Soil Drainage Class: Well drained

GEOCHECK® - PHYSICAL SETTING SOURCE SUMMARY

Hydric Status: Not hydric

Corrosion Potential - Uncoated Steel: Low

Depth to Bedrock Min: > 0 inches

Depth to Watertable Min: > 153 inches

Soil Layer Information							
	Boundary			Classification		Saturated hydraulic conductivity micro m/sec	Soil Reaction (pH)
Layer	Upper	Lower	Soil Texture Class	AASHTO Group	Unified Soil		
1	0 inches	7 inches	sandy loam	Granular materials (35 pct. or less passing No. 200), Silty, or Clayey Gravel and Sand.	COARSE-GRAINED SOILS, Sands, Clean Sands, Poorly graded sand. COARSE-GRAINED SOILS, Sands, Sands with fines, Silty Sand.	Max: 141 Min: 42	Max: 6 Min: 4.5
2	7 inches	40 inches	loam	Granular materials (35 pct. or less passing No. 200), Silty, or Clayey Gravel and Sand.	COARSE-GRAINED SOILS, Sands, Clean Sands, Poorly graded sand. COARSE-GRAINED SOILS, Sands, Sands with fines, Silty Sand.	Max: 141 Min: 42	Max: 6 Min: 4.5
3	40 inches	85 inches	sand	Granular materials (35 pct. or less passing No. 200), Silty, or Clayey Gravel and Sand.	COARSE-GRAINED SOILS, Sands, Clean Sands, Poorly graded sand. COARSE-GRAINED SOILS, Sands, Sands with fines, Silty Sand.	Max: 141 Min: 42	Max: 6 Min: 4.5

Soil Map ID: 4

Soil Component Name: Bojac

Soil Surface Texture: loamy sand

Hydrologic Group: Class B - Moderate infiltration rates. Deep and moderately deep, moderately well and well drained soils with moderately coarse textures.

Soil Drainage Class: Well drained

GEOCHECK® - PHYSICAL SETTING SOURCE SUMMARY

Hydric Status: Not hydric

Corrosion Potential - Uncoated Steel: Low

Depth to Bedrock Min: > 0 inches

Depth to Watertable Min: > 153 inches

Soil Layer Information							
	Boundary			Classification		Saturated hydraulic conductivity micro m/sec	Soil Reaction (pH)
Layer	Upper	Lower	Soil Texture Class	AASHTO Group	Unified Soil		
1	0 inches	7 inches	loamy sand	Granular materials (35 pct. or less passing No. 200), Silty, or Clayey Gravel and Sand.	COARSE-GRAINED SOILS, Sands, Clean Sands, Poorly graded sand. COARSE-GRAINED SOILS, Sands, Sands with fines, Silty Sand.	Max: 141 Min: 42	Max: 6 Min: 4.5
2	7 inches	40 inches	loam	Granular materials (35 pct. or less passing No. 200), Silty, or Clayey Gravel and Sand.	COARSE-GRAINED SOILS, Sands, Clean Sands, Poorly graded sand. COARSE-GRAINED SOILS, Sands, Sands with fines, Silty Sand.	Max: 141 Min: 42	Max: 6 Min: 4.5
3	40 inches	85 inches	sand	Granular materials (35 pct. or less passing No. 200), Silty, or Clayey Gravel and Sand.	COARSE-GRAINED SOILS, Sands, Clean Sands, Poorly graded sand. COARSE-GRAINED SOILS, Sands, Sands with fines, Silty Sand.	Max: 141 Min: 42	Max: 6 Min: 4.5

Soil Map ID: 5

Soil Component Name: Nimmo

Soil Surface Texture: sandy loam

Hydrologic Group: Class D - Very slow infiltration rates. Soils are clayey, have a high water table, or are shallow to an impervious layer.

Soil Drainage Class: Poorly drained

GEOCHECK® - PHYSICAL SETTING SOURCE SUMMARY

Hydric Status: All hydric

Corrosion Potential - Uncoated Steel: Low

Depth to Bedrock Min: > 0 inches

Depth to Watertable Min: > 15 inches

Soil Layer Information							
	Boundary			Classification		Saturated hydraulic conductivity micro m/sec	Soil Reaction (pH)
Layer	Upper	Lower	Soil Texture Class	AASHTO Group	Unified Soil		
1	0 inches	5 inches	sandy loam	Granular materials (35 pct. or less passing No. 200), Silty, or Clayey Gravel and Sand.	COARSE-GRAINED SOILS, Sands, Clean Sands, Poorly graded sand. COARSE-GRAINED SOILS, Sands, Sands with fines, Silty Sand.	Max: 141 Min: 14	Max: 5.5 Min: 3.6
2	5 inches	31 inches	loam	Granular materials (35 pct. or less passing No. 200), Silty, or Clayey Gravel and Sand.	COARSE-GRAINED SOILS, Sands, Clean Sands, Poorly graded sand. COARSE-GRAINED SOILS, Sands, Sands with fines, Silty Sand.	Max: 141 Min: 14	Max: 5.5 Min: 3.6
3	31 inches	85 inches	sand	Granular materials (35 pct. or less passing No. 200), Silty, or Clayey Gravel and Sand.	COARSE-GRAINED SOILS, Sands, Clean Sands, Poorly graded sand. COARSE-GRAINED SOILS, Sands, Sands with fines, Silty Sand.	Max: 141 Min: 14	Max: 5.5 Min: 3.6

Soil Map ID: 6

Soil Component Name: Dragston

Soil Surface Texture: fine sandy loam

Hydrologic Group: Class C - Slow infiltration rates. Soils with layers impeding downward movement of water, or soils with moderately fine or fine textures.

Soil Drainage Class: Somewhat poorly drained

GEOCHECK® - PHYSICAL SETTING SOURCE SUMMARY

Hydric Status: Partially hydric

Corrosion Potential - Uncoated Steel: Low

Depth to Bedrock Min: > 0 inches

Depth to Watertable Min: > 53 inches

Soil Layer Information							
	Boundary			Classification		Saturated hydraulic conductivity micro m/sec	Soil Reaction (pH)
Layer	Upper	Lower	Soil Texture Class	AASHTO Group	Unified Soil		
1	0 inches	5 inches	fine sandy loam	Silt-Clay Materials (more than 35 pct. passing No. 200), Silty Soils.	COARSE-GRAINED SOILS, Sands, Sands with fines, Silty Sand.	Max: 141 Min: 42	Max: 6.5 Min: 4.5
2	5 inches	40 inches	loam	Silt-Clay Materials (more than 35 pct. passing No. 200), Silty Soils.	COARSE-GRAINED SOILS, Sands, Sands with fines, Silty Sand.	Max: 141 Min: 42	Max: 6.5 Min: 4.5
3	40 inches	85 inches	fine sand	Silt-Clay Materials (more than 35 pct. passing No. 200), Silty Soils.	COARSE-GRAINED SOILS, Sands, Sands with fines, Silty Sand.	Max: 141 Min: 42	Max: 6.5 Min: 4.5

LOCAL / REGIONAL WATER AGENCY RECORDS

EDR Local/Regional Water Agency records provide water well information to assist the environmental professional in assessing sources that may impact ground water flow direction, and in forming an opinion about the impact of contaminant migration on nearby drinking water wells.

WELL SEARCH DISTANCE INFORMATION

DATABASE	SEARCH DISTANCE (miles)
Federal USGS	1.000
Federal FRDS PWS	Nearest PWS within 1 mile
State Database	1.000

FEDERAL USGS WELL INFORMATION

MAP ID	WELL ID	LOCATION FROM TP

GEOCHECK® - PHYSICAL SETTING SOURCE SUMMARY

FEDERAL USGS WELL INFORMATION

MAP ID	WELL ID	LOCATION FROM TP
1	USGS40001204166	0 - 1/8 Mile ESE
B5	USGS40001204173	1/4 - 1/2 Mile NW
B6	USGS40001204005	1/4 - 1/2 Mile WNW
B8	USGS40001204172	1/4 - 1/2 Mile WNW
9	USGS40001204170	1/4 - 1/2 Mile ENE
11	USGS40001204176	1/2 - 1 Mile WNW
12	USGS40001204183	1/2 - 1 Mile NW
13	USGS40001204143	1/2 - 1 Mile SW
C14	USGS40001204184	1/2 - 1 Mile NW
C15	USGS40001204185	1/2 - 1 Mile NW

FEDERAL FRDS PUBLIC WATER SUPPLY SYSTEM INFORMATION

MAP ID	WELL ID	LOCATION FROM TP
B7	VA3001620	1/4 - 1/2 Mile NW

Note: PWS System location is not always the same as well location.

STATE DATABASE WELL INFORMATION

MAP ID	WELL ID	LOCATION FROM TP
2	VA6000000000950	0 - 1/8 Mile WNW
A3	VA6000000000952	0 - 1/8 Mile NNW
A4	VA6000000000951	1/8 - 1/4 Mile WNW
10	VA6000000000953	1/2 - 1 Mile ESE

PHYSICAL SETTING SOURCE MAP - 7025287.2s

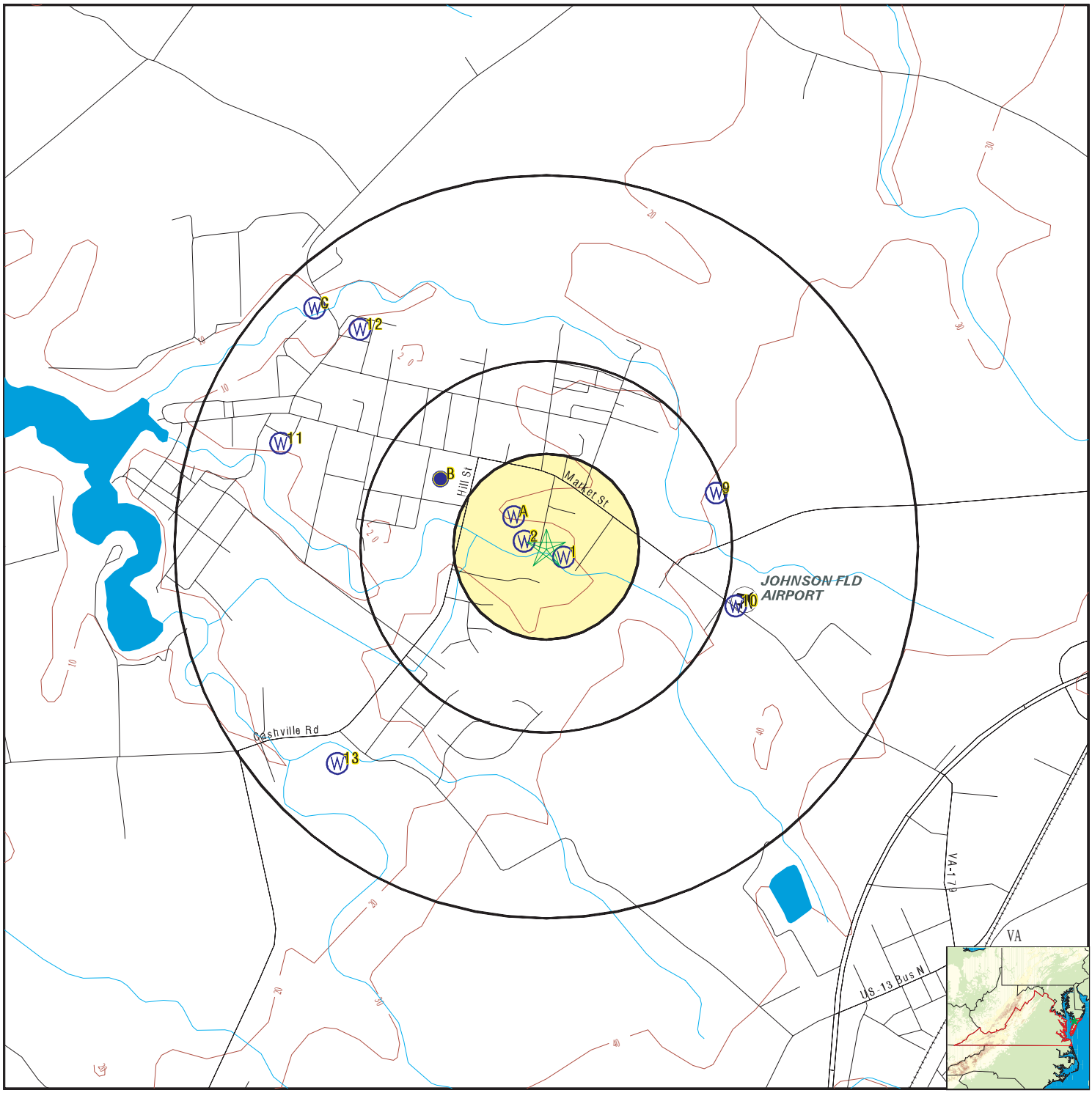

County Boundary
Major Roads
Contour Lines
Airports
Earthquake epicenter, Richter 5 or greater
Water Wells
Public Water Supply Wells
Cluster of Multiple Icons

0 1/4 1/2 1 Miles

Groundwater Flow Direction
GI Indeterminate Groundwater Flow at Location
GV Groundwater Flow Varies at Location
HD Closest Hydrogeological Data
Oil, gas or related wells

N

SITE NAME: Hartman Ave Pump Station	CLIENT: AECOM
ADDRESS: Hartman Ave Onancock VA 23417	CONTACT: Justin Derato INQUIRY #: 7025287.2s
LAT/LONG: 37.706922 / 75.736337	DATE: June 21, 2022 11:14 am

Copyright © 2022 EDR, Inc. © 2015 TomTom Rel. 2015.

GEOCHECK® - PHYSICAL SETTING SOURCE MAP FINDINGS

Map ID Direction Distance Elevation	Database	EDR ID Number
1 **ESE** **0 - 1/8 Mile** **Higher**	**FED USGS**	**USGS40001204166**

Organization ID:	USGS-VA	Organization Name:	USGS Virginia Water Science Center
Monitor Location:	65K 48	Type:	Well
Description:	Not Reported	HUC:	02080109
Drainage Area:	Not Reported	Drainage Area Units:	Not Reported
Contrib Drainage Area:	Not Reported	Contrib Drainage Area Unts:	Not Reported
Aquifer:	Not Reported	Formation Type:	Upper Chesapeake Group
Aquifer Type:	Confined single aquifer	Construction Date:	Not Reported
Well Depth:	160	Well Depth Units:	ft
Well Hole Depth:	160	Well Hole Depth Units:	ft

---

2 **WNW** **0 - 1/8 Mile** **Higher**	**VA WELLS**	**VA6000000000950**

TINWSF:	2681855	PWS ID:	3001620
System Name:	ONANCOCK, TOWN OF	Type:	Well
Facility Name:	WELL NO. 7	Fed Primary Src Class:	Groundwater
PWS Fed Class:	Community	Population Served:	1525
Max Production:	300000 GPD	Avg Daily Production:	185297 GPD

A3 **NNW** **0 - 1/8 Mile** **Higher**	**VA WELLS**	**VA6000000000952**

TINWSF:	2681857	PWS ID:	3001620
System Name:	ONANCOCK, TOWN OF	Type:	Well
Facility Name:	WELL NO. 9	Fed Primary Src Class:	Groundwater
PWS Fed Class:	Community	Population Served:	1525
Max Production:	300000 GPD	Avg Daily Production:	185297 GPD

A4 **WNW** **1/8 - 1/4 Mile** **Higher**	**VA WELLS**	**VA6000000000951**

TINWSF:	2681856	PWS ID:	3001620
System Name:	ONANCOCK, TOWN OF	Type:	Well
Facility Name:	WELL NO. 8	Fed Primary Src Class:	Groundwater
PWS Fed Class:	Community	Population Served:	1525
Max Production:	300000 GPD	Avg Daily Production:	185297 GPD

Map ID Direction Distance Elevation	Database	EDR ID Number
B5 **NW** **1/4 - 1/2 Mile** **Higher**	**FED USGS**	**USGS40001204173**

Organization ID:	USGS-VA	Organization Name:	USGS Virginia Water Science Center
Monitor Location:	65K 35	Type:	Well
Description:	Not Reported	HUC:	Not Reported
Drainage Area:	Not Reported	Drainage Area Units:	Not Reported
Contrib Drainage Area:	Not Reported	Contrib Drainage Area Unts:	Not Reported
Aquifer:	Not Reported	Formation Type:	Not Reported
Aquifer Type:	Not Reported	Construction Date:	Not Reported
Well Depth:	Not Reported	Well Depth Units:	Not Reported
Well Hole Depth:	Not Reported	Well Hole Depth Units:	Not Reported

---

B6 **WNW** **1/4 - 1/2 Mile** **Higher**	**FED USGS**	**USGS40001204005**

Organization ID:	USGS-VA	Organization Name:	USGS Virginia Water Science Center
Monitor Location:	65K 17	Type:	Well
Description:	Not Reported	HUC:	02080109
Drainage Area:	Not Reported	Drainage Area Units:	Not Reported
Contrib Drainage Area:	Not Reported	Contrib Drainage Area Unts:	Not Reported
Aquifer:	Not Reported	Formation Type:	Upper Chesapeake Group
Aquifer Type:	Confined single aquifer	Construction Date:	Not Reported
Well Depth:	188	Well Depth Units:	ft
Well Hole Depth:	282	Well Hole Depth Units:	ft

B7 **NW** **1/4 - 1/2 Mile** **Higher**	**FRDS PWS**	**VA3001620**

Epa region:	03	State:	VA
Pwsid:	VA3001620	Pwsname:	ONANCOCK, TOWN OF
Cityserved:	Not Reported	Stateserved:	VA
Zipserved:	Not Reported	Fipscounty:	51001
Status:	Active	Retpopsrvd:	1525
Pwssvcconn:	720	Psource longname:	Groundwater
Pwstype:	CWS	Owner:	Local_Govt
Contact:	ROBINETT, THOMAS R.	Contactorgname:	ROBINETT, THOMAS R.
Contactphone:	757-787-3363	Contactaddress1:	15 North Street
Contactaddress2:	Not Reported	Contactcity:	ONANCOCK
Contactstate:	VA	Contactzip:	23417
Pwsactivitycode:	A		

Pwsid:	VA3001620	Facid:	33984
Facname:	FLUORIDE	Factype:	Treatment_plant
Facactivitycode:	A	Trtobjective:	other
Trtprocess:	fluoridation	Factypecode:	TP

Pwsid:	VA3001620	Facid:	33985
Facname:	CHLORINATION	Factype:	Treatment_plant
Facactivitycode:	A	Trtobjective:	disinfection

Trtprocess:	hypochlorination, post	Factypecode:	TP
Pwsid:	VA3001620	Facid:	5331
Facname:	JUSTIS ST. CHLORINATION FACILITY		
Factype:	Treatment_plant	Facactivitycode:	I
Trtobjective:	disinfection	Trtprocess:	hypochlorination, post
Factypecode:	TP		
PWS ID:	VA3001620	PWS name:	TOWN OF ONANCOCK
Address:	STEVE THOMAS - PUBLIC WORKS		
Care of:	Not Reported	City:	ONANCOCK
State:	VA	Zip:	23417
Owner:	TOWN OF ONANCOCK	Source code:	Ground water
Population:	1475		
PWS ID:	VA3001620	PWS type:	System Owner/Responsible Party
PWS name:	TOWN OF ONANCOCK	PWS address:	Not Reported
PWS city:	ONANCOCK	PWS state:	VA
PWS zip:	23417	PWS name:	ONANCOCK, TOWN OF
PWS type code:	C	Retail population served:	1525
Contact:	SCOTT, SUSAN DEMARINO	Contact address:	15 NORTH STREET
Contact address:	ONANCOCK	Contact city:	VA
Contact state:	23	Contact zip:	757-787-33
Contact telephone:	Not Reported		
County:	ACCOMACK	Source:	Ground water
Treatment Objective:	DISINFECTION	Process:	HYPOCHLORINATION, POST
Population:	1475		
PWS ID:	VA3001620	Activity status:	Active
Date system activated:	7612	Date system deactivated:	Not Reported
Retail population:	00001475	System name:	TOWN OF ONANCOCK
System address:	Not Reported	System address:	STEVE THOMAS - PUBLIC WORKS
System city:	ONANCOCK	System state:	VA
System zip:	23417		
County FIPS:	001	City served:	ACCOMACK
Population served:	1,001 - 2,500 Persons	Treatment:	Treated
Latitude:	374235	Longitude:	0754430
Latitude:	374235	Longitude:	0754435
Latitude:	374235	Longitude:	0754430
Latitude:	374245	Longitude:	0754505
Latitude:	374245	Longitude:	0754505
State:	VA	Latitude degrees:	37
Latitude minutes:	42	Latitude seconds:	35.0000
Longitude degrees:	75	Longitude minutes:	44
Longitude seconds:	30.0000		
State:	VA	Latitude degrees:	37
Latitude minutes:	42	Latitude seconds:	35.0000
Longitude degrees:	75	Longitude minutes:	44
Longitude seconds:	35.0000		
State:	VA	Latitude degrees:	37
Latitude minutes:	42	Latitude seconds:	45.0000

Longitude degrees:	75	Longitude minutes:	45
Longitude seconds:	5.0000		

Violation id:	3791508	Orig code:	S
State:	VA	Violation Year:	2007
Contamination code:	3100	Contamination Name:	Coliform (TCR)
Violation code:	22	Violation name:	MCL, Monthly (TCR)
Rule code:	110	Rule name:	TCR
Violation measur:	Not Reported	Unit of measure:	Not Reported
State mcl:	Not Reported	Cmp bdt:	11/01/2007
Cmp edt:	11/30/2007		

Violation ID:	3791508	Orig Code:	S
Enforcemnt FY:	2008	Enforcement Action:	12/21/2007
Enforcement Detail:	St Formal NOV issued	Enforcement Category:	Informal

Violation ID:	3791508	Orig Code:	S
Enforcemnt FY:	2008	Enforcement Action:	06/12/2008
Enforcement Detail:	St Compliance achieved	Enforcement Category:	Resolving

Violation ID:	3791508	Orig Code:	S
Enforcemnt FY:	2008	Enforcement Action:	01/08/2008
Enforcement Detail:	St Public Notif received	Enforcement Category:	Informal

Violation ID:	3791508	Orig Code:	S
Enforcemnt FY:	2008	Enforcement Action:	12/21/2007
Enforcement Detail:	St Public Notif requested	Enforcement Category:	Informal

PWS name:	ONANCOCK, TOWN OF	Population served:	1525
PWS type code:	C	Violation ID:	3791508
Contaminant:	COLIFORM (TCR)		
Violation type:	Max Contaminant Level, Monthly (TCR)		
Compliance start date:	11/1/2007 0:00:00	Compliance end date:	11/30/2007 0:00:00
Enforcement date:	1/8/2008 0:00:00	Enforcement action:	State Public Notif Received
Violation measurement:	Not Reported		

PWS name:	ONANCOCK, TOWN OF	Population served:	1525
PWS type code:	C	Violation ID:	3791508
Contaminant:	COLIFORM (TCR)		
Violation type:	Max Contaminant Level, Monthly (TCR)		
Compliance start date:	11/1/2007 0:00:00	Compliance end date:	11/30/2007 0:00:00
Enforcement date:	12/21/2007 0:00:00	Enforcement action:	State Formal NOV Issued
Violation measurement:	Not Reported		

PWS name:	ONANCOCK, TOWN OF	Population served:	1525
PWS type code:	C	Violation ID:	3791508
Contaminant:	COLIFORM (TCR)		
Violation type:	Max Contaminant Level, Monthly (TCR)		
Compliance start date:	11/1/2007 0:00:00	Compliance end date:	11/30/2007 0:00:00
Enforcement date:	12/21/2007 0:00:00	Enforcement action:	State Public Notif Requested
Violation measurement:	Not Reported		

PWS name:	ONANCOCK, TOWN OF	Population served:	1525
PWS type code:	C	Violation ID:	3791508
Contaminant:	COLIFORM (TCR)		
Violation type:	Max Contaminant Level, Monthly (TCR)		
Compliance start date:	11/1/2007 0:00:00	Compliance end date:	11/30/2007 0:00:00
Enforcement date:	6/12/2008 0:00:00	Enforcement action:	State Compliance Achieved
Violation measurement:	Not Reported		

Map ID Direction Distance Elevation	Database	EDR ID Number
B8 **WNW** **1/4 - 1/2 Mile** **Higher**	**FED USGS**	**USGS40001204172**

Organization ID:	USGS-VA	Organization Name:	USGS Virginia Water Science Center
Monitor Location:	65K 9	Type:	Well
Description:	Not Reported	HUC:	02080109
Drainage Area:	Not Reported	Drainage Area Units:	Not Reported
Contrib Drainage Area:	Not Reported	Contrib Drainage Area Unts:	Not Reported
Aquifer:	Not Reported	Formation Type:	Upper Chesapeake Group
Aquifer Type:	Confined single aquifer	Construction Date:	Not Reported
Well Depth:	159	Well Depth Units:	ft
Well Hole Depth:	165	Well Hole Depth Units:	ft

---

9 **ENE** **1/4 - 1/2 Mile** **Higher**	**FED USGS**	**USGS40001204170**

Organization ID:	USGS-VA	Organization Name:	USGS Virginia Water Science Center
Monitor Location:	65K 32	Type:	Well
Description:	Not Reported	HUC:	Not Reported
Drainage Area:	Not Reported	Drainage Area Units:	Not Reported
Contrib Drainage Area:	Not Reported	Contrib Drainage Area Unts:	Not Reported
Aquifer:	Not Reported	Formation Type:	Not Reported
Aquifer Type:	Not Reported	Construction Date:	Not Reported
Well Depth:	52	Well Depth Units:	ft
Well Hole Depth:	52	Well Hole Depth Units:	ft

---

10 **ESE** **1/2 - 1 Mile** **Higher**	**VA WELLS**	**VA6000000000953**

TINWSF:	2664639	PWS ID:	3001625
System Name:	ESRHS CORPORATE OFFICE	Type:	Well
Facility Name:	WELL	Fed Primary Src Class:	Groundwater
PWS Fed Class:	Non-Transient Non-Community		
Population Served:	33	Max Production:	3000 GPD
Avg Daily Production:	470 GPD		

---

11 **WNW** **1/2 - 1 Mile** **Lower**	**FED USGS**	**USGS40001204176**

Organization ID:	USGS-VA	Organization Name:	USGS Virginia Water Science Center
Monitor Location:	65K 49	Type:	Well
Description:	Not Reported	HUC:	02080109
Drainage Area:	Not Reported	Drainage Area Units:	Not Reported
Contrib Drainage Area:	Not Reported	Contrib Drainage Area Unts:	Not Reported
Aquifer:	Not Reported	Formation Type:	Upper Chesapeake Group
Aquifer Type:	Confined single aquifer	Construction Date:	Not Reported

Well Depth:	147	Well Depth Units:	ft
Well Hole Depth:	147	Well Hole Depth Units:	ft

12
NW
1/2 - 1 Mile
Lower

FED USGS **USGS40001204183**

Organization ID:	USGS-VA	Organization Name:	USGS Virginia Water Science Center
Monitor Location:	65K 3	Type:	Well
Description:	Not Reported	HUC:	02080109
Drainage Area:	Not Reported	Drainage Area Units:	Not Reported
Contrib Drainage Area:	Not Reported	Contrib Drainage Area Unts:	Not Reported
Aquifer:	Not Reported	Formation Type:	Not Reported
Aquifer Type:	Not Reported	Construction Date:	Not Reported
Well Depth:	486	Well Depth Units:	ft
Well Hole Depth:	486	Well Hole Depth Units:	ft

13
SW
1/2 - 1 Mile
Lower

FED USGS **USGS40001204143**

Organization ID:	USGS-VA	Organization Name:	USGS Virginia Water Science Center
Monitor Location:	65K 54	Type:	Well
Description:	Not Reported	HUC:	02080109
Drainage Area:	Not Reported	Drainage Area Units:	Not Reported
Contrib Drainage Area:	Not Reported	Contrib Drainage Area Unts:	Not Reported
Aquifer:	Not Reported	Formation Type:	Upper Chesapeake Group
Aquifer Type:	Confined single aquifer	Construction Date:	Not Reported
Well Depth:	160	Well Depth Units:	ft
Well Hole Depth:	160	Well Hole Depth Units:	ft

C14
NW
1/2 - 1 Mile
Lower

FED USGS **USGS40001204184**

Organization ID:	USGS-VA	Organization Name:	USGS Virginia Water Science Center
Monitor Location:	65K 36	Type:	Well
Description:	Not Reported	HUC:	Not Reported
Drainage Area:	Not Reported	Drainage Area Units:	Not Reported
Contrib Drainage Area:	Not Reported	Contrib Drainage Area Unts:	Not Reported
Aquifer:	Not Reported	Formation Type:	Not Reported
Aquifer Type:	Not Reported	Construction Date:	Not Reported
Well Depth:	Not Reported	Well Depth Units:	Not Reported
Well Hole Depth:	Not Reported	Well Hole Depth Units:	Not Reported

Map ID Direction Distance Elevation	Database	EDR ID Number
C15 **NW** **1/2 - 1 Mile** **Lower**	**FED USGS**	**USGS40001204185**

Organization ID:	USGS-VA	Organization Name:	USGS Virginia Water Science Center
Monitor Location:	65K 37	Type:	Well
Description:	Not Reported	HUC:	Not Reported
Drainage Area:	Not Reported	Drainage Area Units:	Not Reported
Contrib Drainage Area:	Not Reported	Contrib Drainage Area Unts:	Not Reported
Aquifer:	Not Reported	Formation Type:	Not Reported
Aquifer Type:	Not Reported	Construction Date:	Not Reported
Well Depth:	183	Well Depth Units:	ft
Well Hole Depth:	183	Well Hole Depth Units:	ft

GEOCHECK® - PHYSICAL SETTING SOURCE MAP FINDINGS
RADON

AREA RADON INFORMATION

EPA Region 3 Statistical Summary Readings for Zip Code: 23417

Number of sites tested: 4.

Maximum Radon Level: 1.1 pCi/L.
Minimum Radon Level: 0.6 pCi/L.

pCi/L <4	pCi/L 4-10	pCi/L 10-20	pCi/L 20-50	pCi/L 50-100	pCi/L >100
4 (100.00%)	0 (0.00%)	0 (0.00%)	0 (0.00%)	0 (0.00%)	0 (0.00%)

Federal EPA Radon Zone for ACCOMACK County: 3

Note: Zone 1 indoor average level > 4 pCi/L.
: Zone 2 indoor average level >= 2 pCi/L and <= 4 pCi/L.
: Zone 3 indoor average level < 2 pCi/L.

PHYSICAL SETTING SOURCE RECORDS SEARCHED

TOPOGRAPHIC INFORMATION

USGS 7.5' Digital Elevation Model (DEM)
Source: United States Geologic Survey
EDR acquired the USGS 7.5' Digital Elevation Model in 2002 and updated it in 2006. The 7.5 minute DEM corresponds to the USGS 1:24,000- and 1:25,000-scale topographic quadrangle maps. The DEM provides elevation data with consistent elevation units and projection.

Current USGS 7.5 Minute Topographic Map
Source: U.S. Geological Survey

HYDROLOGIC INFORMATION

Flood Zone Data: This data was obtained from the Federal Emergency Management Agency (FEMA). It depicts 100-year and 500-year flood zones as defined by FEMA. It includes the National Flood Hazard Layer (NFHL) which incorporates Flood Insurance Rate Map (FIRM) data and Q3 data from FEMA in areas not covered by NFHL.
Source: FEMA
Telephone: 877-336-2627
Date of Government Version: 2003, 2015

NWI: National Wetlands Inventory. This data, available in select counties across the country, was obtained by EDR in 2002, 2005 and 2010 from the U.S. Fish and Wildlife Service.

HYDROGEOLOGIC INFORMATION

AQUIFLOW[R] Information System
Source: EDR proprietary database of groundwater flow information
EDR has developed the AQUIFLOW Information System (AIS) to provide data on the general direction of groundwater flow at specific points. EDR has reviewed reports submitted to regulatory authorities at select sites and has extracted the date of the report, hydrogeologically determined groundwater flow direction and depth to water table information.

GEOLOGIC INFORMATION

Geologic Age and Rock Stratigraphic Unit
Source: P.G. Schruben, R.E. Arndt and W.J. Bawiec, Geology of the Conterminous U.S. at 1:2,500,000 Scale - A digital representation of the 1974 P.B. King and H.M. Beikman Map, USGS Digital Data Series DDS - 11 (1994).

STATSGO: State Soil Geographic Database
Source: Department of Agriculture, Natural Resources Conservation Service (NRCS)
The U.S. Department of Agriculture's (USDA) Natural Resources Conservation Service (NRCS) leads the national Conservation Soil Survey (NCSS) and is responsible for collecting, storing, maintaining and distributing soil survey information for privately owned lands in the United States. A soil map in a soil survey is a representation of soil patterns in a landscape. Soil maps for STATSGO are compiled by generalizing more detailed (SSURGO) soil survey maps.

SSURGO: Soil Survey Geographic Database
Source: Department of Agriculture, Natural Resources Conservation Service (NRCS)
Telephone: 800-672-5559
SSURGO is the most detailed level of mapping done by the Natural Resources Conservation Service, mapping scales generally range from 1:12,000 to 1:63,360. Field mapping methods using national standards are used to construct the soil maps in the Soil Survey Geographic (SSURGO) database. SSURGO digitizing duplicates the original soil survey maps. This level of mapping is designed for use by landowners, townships and county natural resource planning and management.

PHYSICAL SETTING SOURCE RECORDS SEARCHED

LOCAL / REGIONAL WATER AGENCY RECORDS

FEDERAL WATER WELLS

PWS: Public Water Systems
Source: EPA/Office of Drinking Water
Telephone: 202-564-3750
Public Water System data from the Federal Reporting Data System. A PWS is any water system which provides water to at least 25 people for at least 60 days annually. PWSs provide water from wells, rivers and other sources.

PWS ENF: Public Water Systems Violation and Enforcement Data
Source: EPA/Office of Drinking Water
Telephone: 202-564-3750
Violation and Enforcement data for Public Water Systems from the Safe Drinking Water Information System (SDWIS) after August 1995. Prior to August 1995, the data came from the Federal Reporting Data System (FRDS).

USGS Water Wells: USGS National Water Inventory System (NWIS)
This database contains descriptive information on sites where the USGS collects or has collected data on surface water and/or groundwater. The groundwater data includes information on wells, springs, and other sources of groundwater.

STATE RECORDS

Virginia Public Water Supplies
Source: Department of Health, Office of Water Programs
Telephone: 804-786-1756

OTHER STATE DATABASE INFORMATION

Virginia Oil and Gas Wells
Source: Department of Mines, Minerals and Energy
Telephone: 804-692-3200
A listing of oil and gas well locations.

RADON

Area Radon Information
Source: USGS
Telephone: 703-356-4020
The National Radon Database has been developed by the U.S. Environmental Protection Agency (USEPA) and is a compilation of the EPA/State Residential Radon Survey and the National Residential Radon Survey. The study covers the years 1986 - 1992. Where necessary data has been supplemented by information collected at private sources such as universities and research institutions.

EPA Radon Zones
Source: EPA
Telephone: 703-356-4020
Sections 307 & 309 of IRAA directed EPA to list and identify areas of U.S. with the potential for elevated indoor radon levels.

EPA Region 3 Statistical Summary Readings
Source: Region 3 EPA
Telephone: 215-814-2082
Radon readings for Delaware, D.C., Maryland, Pennsylvania, Virginia and West Virginia.

OTHER

Airport Landing Facilities: Private and public use landing facilities
Source: Federal Aviation Administration, 800-457-6656

Epicenters: World earthquake epicenters, Richter 5 or greater
Source: Department of Commerce, National Oceanic and Atmospheric Administration

Earthquake Fault Lines: The fault lines displayed on EDR's Topographic map are digitized quaternary faultlines, prepared in 1975 by the United State Geological Survey

PHYSICAL SETTING SOURCE RECORDS SEARCHED

STREET AND ADDRESS INFORMATION

Â© 2015 TomTom North America, Inc. All rights reserved. This material is proprietary and the subject of copyright protection and other intellectual property rights owned by or licensed to Tele Atlas North America, Inc. The use of this material is subject to the terms of a license agreement. You will be held liable for any unauthorized copying or disclosure of this material.

Appendix B
Regulatory Agency Files

Poudel, Agrima

From: FOIA, TRO <trofoias@deq.virginia.gov>
Sent: Tuesday, June 21, 2022 9:38 AM
To: Derato, Justin
Subject: [EXTERNAL] FOIA #22-1147 Request for additional information
Attachments: FOIA #22-1147.pdf

Good morning,

We are unable to perform a records search based on the information provided. We have records based on addresses, facility ID, incident ID, and permit number; we cannot perform a records search using parcels, tax ID, etc.

Please let me know if you have additional information to provide in order for DEQ to perform a records search.

Thank you

If you have questions or concerns regarding TRO FOIA requests/responses, please email trofoias@deq.virginia.gov.
---------- Forwarded message ---------
From: **DEQ Website** <DEQCommunications@deq.virginia.gov>
Date: Tue, Jun 21, 2022 at 8:53 AM
Subject: *NEW SUBMISSION* Freedom of Information Act Request
To: trofoias@deq.virginia.gov <trofoias@deq.virginia.gov>

Freedom of Information Act Request

Submission #:	1755707
IP Address:	165.1.200.173
Submission Date:	06/21/2022
Survey Time:	22 minutes, 46 seconds

You have a new online form submission. To download a copy in PDF format, please click here.
Note: a download will promptly begin but may take up to a few minutes to complete pending the overall submission size.

Thank you,
Virginia DEQ

This is an automated message generated by Granicus. Please do not reply directly to this email.

--

Did you know the information you are looking for may already be online? We have compiled a list of the most frequently requested FOIA items. Please take a moment to review our online resources.

Request submitted by:

* **Name**
Justin Derato

* **Date**
06/21/2022

* I am a Virginia resident
No

* **Email**
justin.derato@aecom.com

Phone Number
(301) 616-0158

Information Requested

Please provide past history and current usage of property. Any information is helpful *(Example: private residence, undeveloped land, current operating business, former business, industrial property, etc)*.

* **Please be as specific as possible in describing the information you are requesting.**
As part of the due diligence effort, I am requesting, under the FOIA, information from your records regarding environmental compliance issues, citations, and/or violations that have been assessed against the listed facility. We are interested in compliance issues, environmental notices and violations, water quality degradation, chemical or petroleum spills, leaking underground storage tanks or transformers, dumping of any kind, or other issues that may have impacted the environment or property.

Read-Only Content

Facility

Facility Name (if known)
SKIPPED

Former Name/Owner (if known)
Hampton Roads Sanitation District

Full Address
9524 T-681
Franktown Virginia 23354

Additional Information
Site is unaddressed as Parcel #: 21A1-A-46A

* What date range is this requested for?
Last 5 years

* Add another facility?
Yes

Facility 2

Facility 2 Name (if known)
Sewer Pump Station

Former Facility 2 Name/Owner (if known)

EASTERN SHORE COALITION AGAINST DOME

Full Address 2
Hartman Ave
Onancock Virginia 23417

Additional Facility 2 Information
Site Parcel Number 85A3-A-6. Site is comprised of a sanitary sewer pump station on the wooded portion of the parcel.

Add an additional facility?
Yes

Facility 3

Facility 3 Name (if known)
Vacant Lot

Former Facility 3 Name/Owner (if known)
Town of Exmore

Full Address 3
Carolyn Ave
Exmore Virginia 23350

Additional Facility 3 Information
Site Parcel Numbers 10A2-3-9 and 10A2-3-10. Site is comprised of a vacant lot owned by the Town of Exmore.

Where do I send my request?

Please submit your request to the regional office that oversees the facility. Statewide requests should be sent to **Central Office**.

- Select **Blue Ridge Regional Office** if the facility is within the following counties or cities:
  - *Counties:* Alleghany, Amherst, Appomattox, Bedford, Botetourt, Campbell, Charlotte, Craig, Floyd, Franklin, Giles, Halifax, Henry, Montgomery, Patrick, Pittsylvania, Pulaski, and Roanoke
  - *Cities:* Bedford, Clifton Forge, Danville, Covington, Lynchburg, Martinsville, Radford, Roanoke and Salem

- Select **Northern Regional Office** if the facility is within the following counties or cities:
  - *Counties:* Arlington, Caroline, Culpeper, Fairfax, Fauquier, King George, Loudoun, Louisa, Madison, Orange, Prince William, Rappahannock, Spotsylvania, and Stafford
  - *Cities:* Alexandria, Fairfax, Falls Church, Fredericksburg, Manassas and Manassas Park

- Select **Piedmont Regional Office** if the facility is within the following counties or cities:
  - *Counties:* Amelia, Brunswick, Buckingham, Charles City, Chesterfield, Cumberland, Dinwiddie, Essex, Gloucester, Goochland, Greensville, Hanover, Henrico, King and Queen, King William, Lancaster, Lunenburg, Mathews, Mecklenburg, Middlesex, New Kent, Northumberland, Nottoway, Powhatan, Prince Edward, Prince George, Richmond, Surry, Sussex, and Westmoreland
  - *Cities:* Colonial Heights, Emporia, Hopewell, Petersburg, and Richmond

- Select **Southwest Regional Office** if the facility is within the following counties or cities:
  - *Counties:* Bland, Buchanan, Carroll, Dickenson, Grayson, Lee, Russell, Scott, Smyth, Tazewell, Washington, Wise, and Wythe
  - *Cities:* Bristol, Galax and Norton

- Select **Tidewater Regional Office** if the facility is within the following counties or cities:
  - *Counties:* Accomack, Isle of Wight, James City, Northampton, Southampton and York
  - *Cities:* Chesapeake, Franklin, Hampton, Newport News, Norfolk, Poquoson, Portsmouth, Suffolk, Virginia Beach, and Williamsburg

- Select **Valley Regional Office** if the facility is within the following counties or cities:
  - *Counties:* Albemarle, Augusta, Bath, Clarke, Fluvanna, Frederick, Greene, Highland, Nelson, Page, Rockbridge, Rockingham, Shenandoah, and Warren
  - *Cities:* Buena Vista, Charlottesville, Harrisonburg, Lexington, Staunton, Waynesboro, and Winchester

For Commonwealth-wide records, please select **Central Office**.

* **Regional Office**
Tidewater Regional Office

Poudel, Agrima

From: Accomack County FOIA Requests <FOIA@co.accomack.va.us>
Sent: Friday, June 24, 2022 12:41 PM
To: Derato, Justin; Accomack County FOIA Requests
Subject: [EXTERNAL] RE: Accomack Records Request

Good afternoon.

We have no record of any compliance issues, environmental notices and violations, water quality degradation, chemical or petroleum spills, leaking underground storage tanks and/or transformers, dumping of any kind, or other issues that may have impacted the environment on the subject property, on Hartman Avenue.

I will note that the County does not handle Zoning for the Town of Onancock, which the site is located within the incorporated limits of, so I would recommend that you also check with the Town if you have not already done so.

Jessica Taylor Hargis
Executive Assistant
Accomack County Administrator's Office
23296 Courthouse Avenue – Room 203 | P.O. Box 388 | Accomac, VA 23301
Office: (757) 787-5700 | Email: jessicahargis@co.accomack.va.us
AccoMap | County Ordinances | BoardDocs

From: Derato, Justin <Justin.Derato@aecom.com>
Sent: Tuesday, June 21, 2022 9:24 AM
To: Accomack County FOIA Requests <FOIA@co.accomack.va.us>
Subject: Accomack Records Request

As part of the due diligence effort, I am requesting, under the Freedom of Information Act (FOIA), information from your records regarding environmental compliance issues, citations, and/or violations that have been assessed against the listed facility and adjacent properties. I am particularly interested in compliance issues, environmental notices and violations, water quality degradation, chemical or petroleum spills, leaking underground storage tanks and/or transformers, dumping of any kind, or other issues that may have impacted the environment on the subject property.

Subject Property 1: Hartman Avenue, Onancock, VA 23417 (Parcel Number: 85A3-A-6) – Eastern Shore Coalition Against Dome, Pump Station/vacant lot

Site is comprised of an old sewer pump station and a wooded vacant lot on the southern portion of the subject parcel.

Thank you,
Justin

Justin Derato

Environmental Scientist
Subsurface Investigation and Due Diligence
M +1-301-616-0158
justin.derato@aecom.com

Click here to connect with me on LinkedIn

AECOM

12420 Milestone Center Drive, Suite 150
Germantown, MD 20876, USA
T +1-301-250-2934
aecom.com

Delivering a better world
LinkedIn | Twitter | Facebook | Instagram

Poudel, Agrima

From: Matt Spuck <matt.spuck@onancock.com>
Sent: Friday, July 8, 2022 8:47 AM
To: Poudel, Agrima
Subject: [EXTERNAL] RE: FOIA Request

This pumping station has been in place for over 15 years. There have never been any environmental issues, fines, or leaks. Pumping stations to not use chemicals, and therefore no spills are possible.

The system is being rebuilt to allow wider community access to the wastewater treatment facility. When construction is complete, the pump station will be decommissioned and properly disposed.

Matt Spuck
Town Manager

t: 757-787-3363
e: matt.spuck@onancock.com | w: www.onancock.com
a: 15 North Street, Onancock, 23417

From: Poudel, Agrima <Agrima.Poudel@aecom.com>
Sent: Thursday, July 7, 2022 3:30 PM
To: Matt Spuck <matt.spuck@onancock.com>
Subject: FOIA Request

As part of the due diligence effort, I am requesting, under the Freedom of Information Act (FOIA), information from your records regarding environmental compliance issues, citations, and/or violations that have been assessed against the listed facility and adjacent properties. I am particularly interested in compliance issues, environmental notices and violations, water quality degradation, chemical or petroleum spills, leaking underground storage tanks and/or transformers, dumping of any kind, or other issues that may have impacted the environment on the subject property.

Subject Property 1: Hartman Avenue, Onancock, VA 23417 (Parcel Number: 85A3-A-6) – Eastern Shore Coalition Against Dome, Pump Station/vacant lot

Site is comprised of an old sewer pump station and a wooded vacant lot on the southern portion of the subject parcel.

Thank you,
Justin

Agrima Poudel
She/Her

Environmental Scientist II, EHS + AIR
M +1 571-296-9547
agrima.poudel@aecom.com

Click here to connect with me on LinkedIn

AECOM
aecom.com

Delivering a better world
LinkedIn | Twitter | Facebook | Instagram

Appendix C
Historical Research Documents

Hartman Ave Pump Station

Hartman Ave

Onancock, VA 23417

Inquiry Number: 7025287.8

June 22, 2022

The EDR Aerial Photo Decade Package

6 Armstrong Road, 4th floor
Shelton, CT 06484
Toll Free: 800.352.0050
www.edrnet.com

EDR Aerial Photo Decade Package

06/22/22

Site Name:

Hartman Ave Pump Station
Hartman Ave
Onancock, VA 23417
EDR Inquiry # 7025287.8

Client Name:

AECOM
12420 Milestone Center Drive
Germantown, MD 20876-0000
Contact: Justin Derato

Environmental Data Resources, Inc. (EDR) Aerial Photo Decade Package is a screening tool designed to assist environmental professionals in evaluating potential liability on a target property resulting from past activities. EDR's professional researchers provide digitally reproduced historical aerial photographs, and when available, provide one photo per decade.

Search Results:

Year	***Scale***	***Details***	***Source***
2016	1"=500'	Flight Year: 2016	USDA/NAIP
2012	1"=500'	Flight Year: 2012	USDA/NAIP
2009	1"=500'	Flight Year: 2009	USDA/NAIP
2006	1"=500'	Flight Year: 2006	USDA/NAIP
2000	1"=500'	Flight Date: March 24, 2000	USGS
1995	1"=500'	Flight Date: October 21, 1995	USGS
1994	1"=500'	Acquisition Date: March 20, 1994	USGS/DOQQ
1990	1"=500'	Flight Date: March 23, 1990	USGS
1973	1"=500'	Flight Date: April 01, 1973	USGS
1959	1"=500'	Flight Date: December 10, 1959	USGS

When delivered electronically by EDR, the aerial photo images included with this report are for ONE TIME USE ONLY. Further reproduction of these aerial photo images is prohibited without permission from EDR. For more information contact your EDR Account Executive.

Disclaimer - Copyright and Trademark Notice

This Report contains certain information obtained from a variety of public and other sources reasonably available to Environmental Data Resources, Inc. It cannot be concluded from this Report that coverage information for the target and surrounding properties does not exist from other sources. NO WARRANTY EXPRESSED OR IMPLIED, IS MADE WHATSOEVER IN CONNECTION WITH THIS REPORT. ENVIRONMENTAL DATA RESOURCES, INC. SPECIFICALLY DISCLAIMS THE MAKING OF ANY SUCH WARRANTIES, INCLUDING WITHOUT LIMITATION, MERCHANTABILITY OR FITNESS FOR A PARTICULAR USE OR PURPOSE. ALL RISK IS ASSUMED BY THE USER. IN NO EVENT SHALL ENVIRONMENTAL DATA RESOURCES, INC. BE LIABLE TO ANYONE, WHETHER ARISING OUT OF ERRORS OR OMISSIONS, NEGLIGENCE, ACCIDENT OR ANY OTHER CAUSE, FOR ANY LOSS OF DAMAGE, INCLUDING, WITHOUT LIMITATION, SPECIAL, INCIDENTAL, CONSEQUENTIAL, OR EXEMPLARY DAMAGES. ANY LIABILITY ON THE PART OF ENVIRONMENTAL DATA RESOURCES, INC. IS STRICTLY LIMITED TO A REFUND OF THE AMOUNT PAID FOR THIS REPORT. Purchaser accepts this Report "AS IS". Any analyses, estimates, ratings, environmental risk levels or risk codes provided in this Report are provided for illustrative purposes only, and are not intended to provide, nor should they be interpreted as providing any facts regarding, or prediction or forecast of, any environmental risk for any property. Only a Phase I Environmental Site Assessment performed by an environmental professional can provide information regarding the environmental risk for any property. Additionally, the information provided in this Report is not to be construed as legal advice.

Copyright 2022 by Environmental Data Resources, Inc. All rights reserved. Reproduction in any media or format, in whole or in part, of any report or map of Environmental Data Resources, Inc., or its affiliates, is prohibited without prior written permission.

EDR and its logos (including Sanborn and Sanborn Map) are trademarks of Environmental Data Resources, Inc. or its affiliates. All other trademarks used herein are the property of their respective owners.

INQUIRY #: 7025287.8
YEAR: 2016
= 500'
N
EDR

INQUIRY #: 7025287.8
YEAR: 2012
= 500'
N
EDR

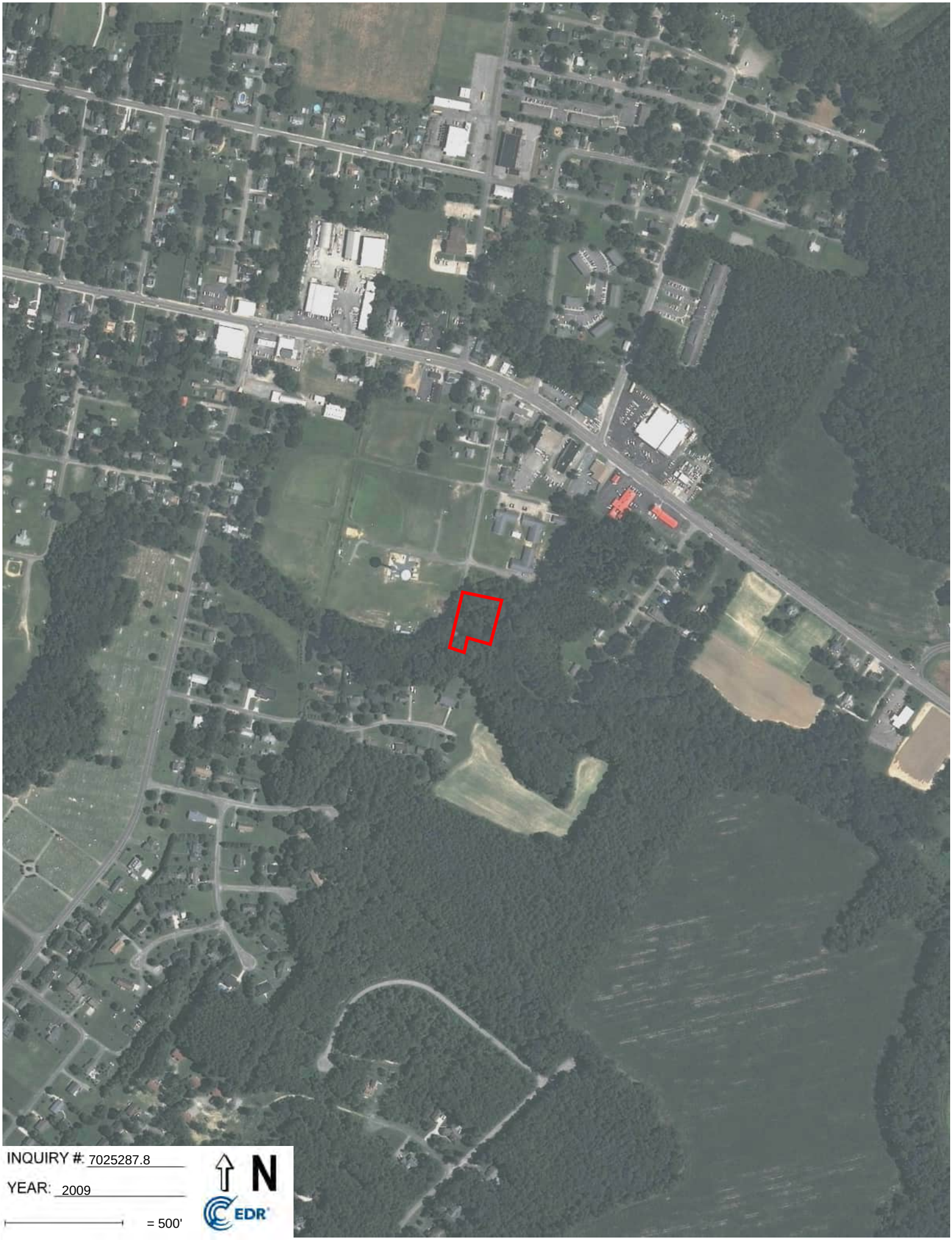
INQUIRY #: 7025287.8
YEAR: 2009
= 500'
N
EDR

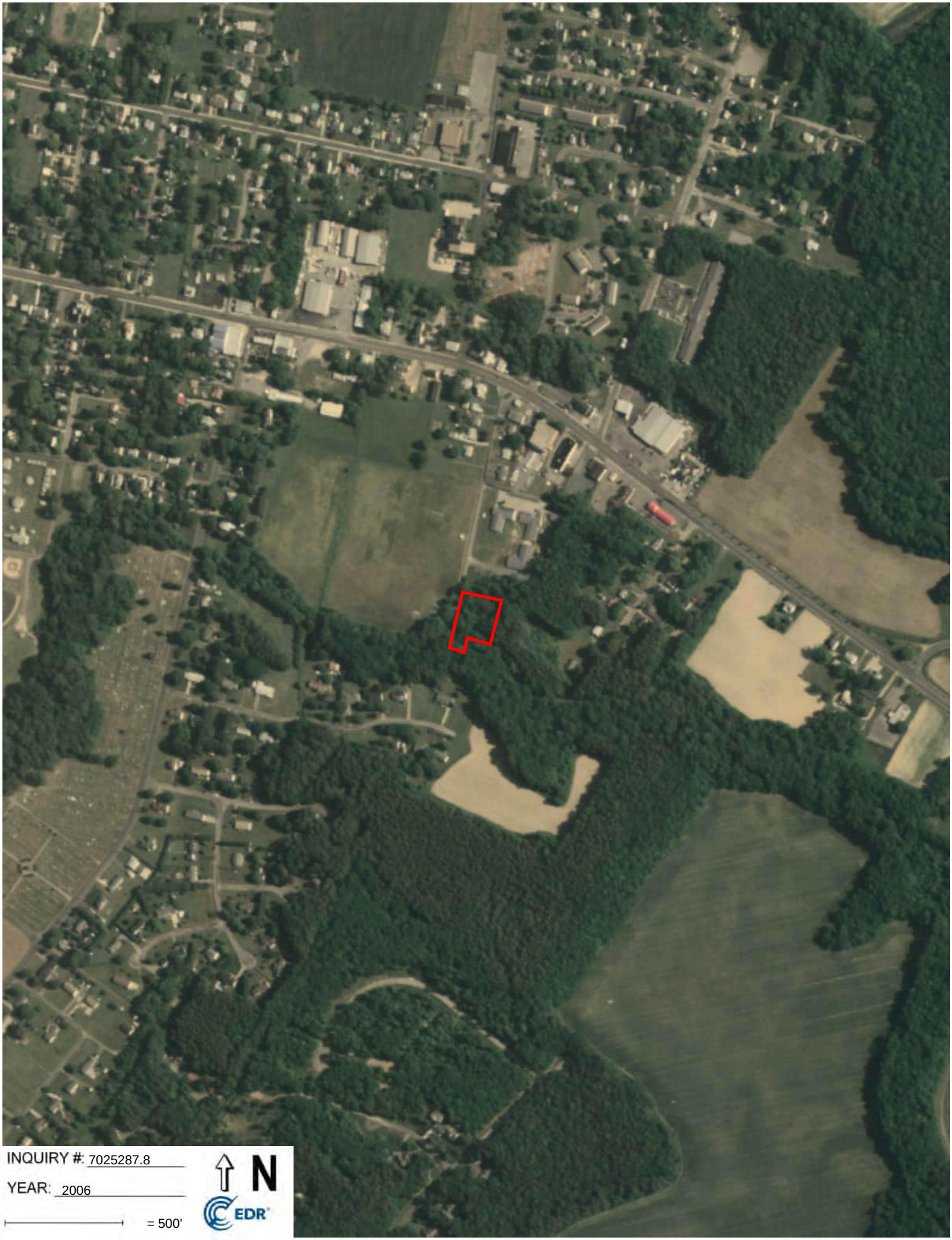
INQUIRY #: 7025287.8
YEAR: 2006
= 500'
N
EDR

INQUIRY #: 7025287.8
YEAR: 2000
= 500'
N
EDR
Subject boundary not shown because it exceeds image extent or image is not georeferenced.

INQUIRY #: 7025287.8

YEAR: 1995

= 500'

N

EDR

Subject boundary not shown because it exceeds image extent or image is not georeferenced.

INQUIRY #: 7025287.8
YEAR: 1994
= 500'
N
EDR

INQUIRY #: 7025287.8

YEAR: 1990

= 500'

N

EDR

Subject boundary not shown because it exceeds image extent or image is not georeferenced.

INQUIRY #: 7025287.8
YEAR: 1973
= 500'
N
EDR

INQUIRY #: 7025287.8
YEAR: 1959
= 500'
N
EDR

Hartman Ave Pump Station

Hartman Ave

Onancock, VA 23417

Inquiry Number: 7025287.4

June 21, 2022

EDR Historical Topo Map Report

with QuadMatch™

6 Armstrong Road, 4th floor
Shelton, CT 06484
Toll Free: 800.352.0050
www.edrnet.com

EDR Historical Topo Map Report

06/21/22

Site Name:	Client Name:
Hartman Ave Pump Station	AECOM
Hartman Ave	12420 Milestone Center Drive
Onancock, VA 23417	Germantown, MD 20876-0000
EDR Inquiry # 7025287.4	Contact: Justin Derato

EDR Topographic Map Library has been searched by EDR and maps covering the target property location as provided by AECOM were identified for the years listed below. EDR's Historical Topo Map Report is designed to assist professionals in evaluating potential liability on a target property resulting from past activities. EDRs Historical Topo Map Report includes a search of a collection of public and private color historical topographic maps, dating back to the late 1800s.

Search Results:		*Coordinates:*	
P.O.#	NA	**Latitude:**	37.706922 37° 42' 25" North
Project:	Hartman Ave Pump Station-HR	**Longitude:**	-75.736337 -75° 44' 11" West
		UTM Zone:	Zone 18 North
		UTM X Meters:	435094.69
		UTM Y Meters:	4173553.31
		Elevation:	15.50' above sea level

Maps Provided:

2019	1931
2016	
2013	
1979	
1978	
1968	
1957	
1935	

Disclaimer - Copyright and Trademark Notice

This Report contains certain information obtained from a variety of public and other sources reasonably available to Environmental Data Resources, Inc. It cannot be concluded from this Report that coverage information for the target and surrounding properties does not exist from other sources. NO WARRANTY EXPRESSED OR IMPLIED, IS MADE WHATSOEVER IN CONNECTION WITH THIS REPORT. ENVIRONMENTAL DATA RESOURCES, INC. SPECIFICALLY DISCLAIMS THE MAKING OF ANY SUCH WARRANTIES, INCLUDING WITHOUT LIMITATION, MERCHANTABILITY OR FITNESS FOR A PARTICULAR USE OR PURPOSE. ALL RISK IS ASSUMED BY THE USER. IN NO EVENT SHALL ENVIRONMENTAL DATA RESOURCES, INC. BE LIABLE TO ANYONE, WHETHER ARISING OUT OF ERRORS OR OMISSIONS, NEGLIGENCE, ACCIDENT OR ANY OTHER CAUSE, FOR ANY LOSS OF DAMAGE, INCLUDING, WITHOUT LIMITATION, SPECIAL, INCIDENTAL, CONSEQUENTIAL, OR EXEMPLARY DAMAGES. ANY LIABILITY ON THE PART OF ENVIRONMENTAL DATA RESOURCES, INC. IS STRICTLY LIMITED TO A REFUND OF THE AMOUNT PAID FOR THIS REPORT. Purchaser accepts this Report "AS IS". Any analyses, estimates, ratings, environmental risk levels or risk codes provided in this Report are provided for illustrative purposes only, and are not intended to provide, nor should they be interpreted as providing any facts regarding, or prediction or forecast of, any environmental risk for any property. Only a Phase I Environmental Site Assessment performed by an environmental professional can provide information regarding the environmental risk for any property. Additionally, the information provided in this Report is not to be construed as legal advice.

Copyright 2022 by Environmental Data Resources, Inc. All rights reserved. Reproduction in any media or format, in whole or in part, of any report or map of Environmental Data Resources, Inc., or its affiliates, is prohibited without prior written permission.

EDR and its logos (including Sanborn and Sanborn Map) are trademarks of Environmental Data Resources, Inc. or its affiliates. All other trademarks used herein are the property of their respective owners.

Topo Sheet Key

This EDR Topo Map Report is based upon the following USGS topographic map sheets.

2019 Source Sheets

Accomac
2019
7.5-minute, 24000

Pungoteague
2019
7.5-minute, 24000

2016 Source Sheets

Accomac
2016
7.5-minute, 24000

Pungoteague
2016
7.5-minute, 24000

2013 Source Sheets

Accomac
2013
7.5-minute, 24000

Pungoteague
2013
7.5-minute, 24000

1979 Source Sheets

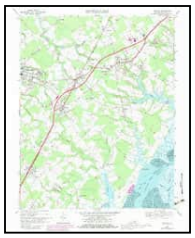

Accomac
1979
7.5-minute, 24000
Aerial Photo Revised 1977

Topo Sheet Key

This EDR Topo Map Report is based upon the following USGS topographic map sheets.

1978 Source Sheets

Accomac
1978
7.5-minute, 24000
Aerial Photo Revised 1978

1968 Source Sheets

Pungoteague
1968
7.5-minute, 24000
Aerial Photo Revised 1967

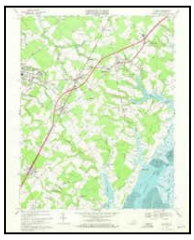

Accomac
1968
7.5-minute, 24000
Aerial Photo Revised 1967

1957 Source Sheets

Accomac
1957
7.5-minute, 24000
Aerial Photo Revised 1955

1935 Source Sheets

Accomac
1935
15-minute, 62500

Topo Sheet Key

This EDR Topo Map Report is based upon the following USGS topographic map sheets.

1931 Source Sheets

Accomac
1931
15-minute, 48000

Historical Topo Map

2019

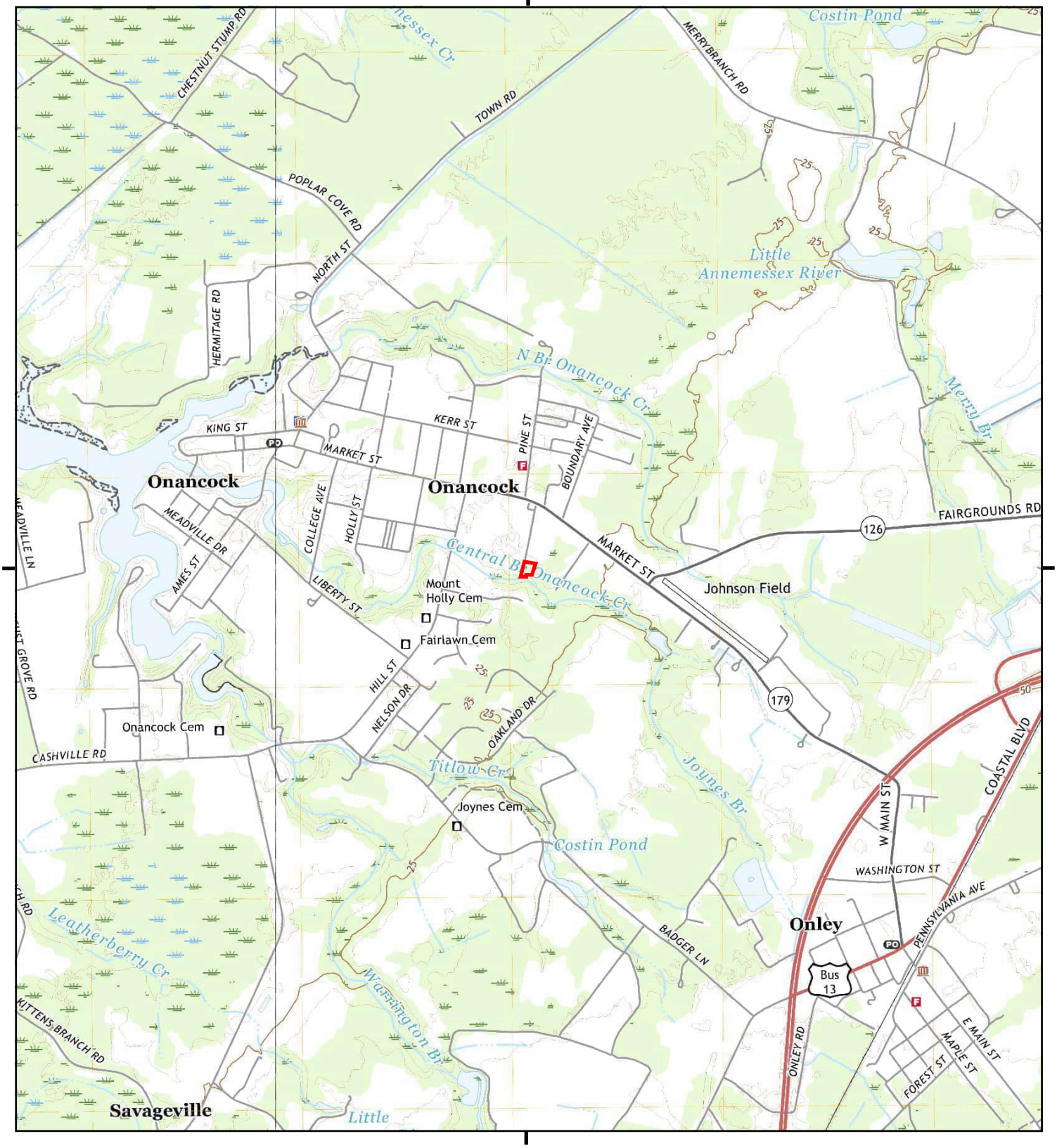

This report includes information from the following map sheet(s).

0 Miles 0.25 0.5 1 1.5

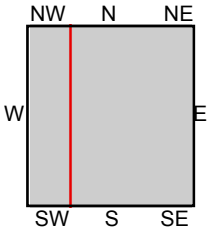

TP, Accomac, 2019, 7.5-minute
W, Pungoteague, 2019, 7.5-minute

SITE NAME: Hartman Ave Pump Station
ADDRESS: Hartman Ave
Onancock, VA 23417
CLIENT: AECOM

N

Historical Topo Map

2016

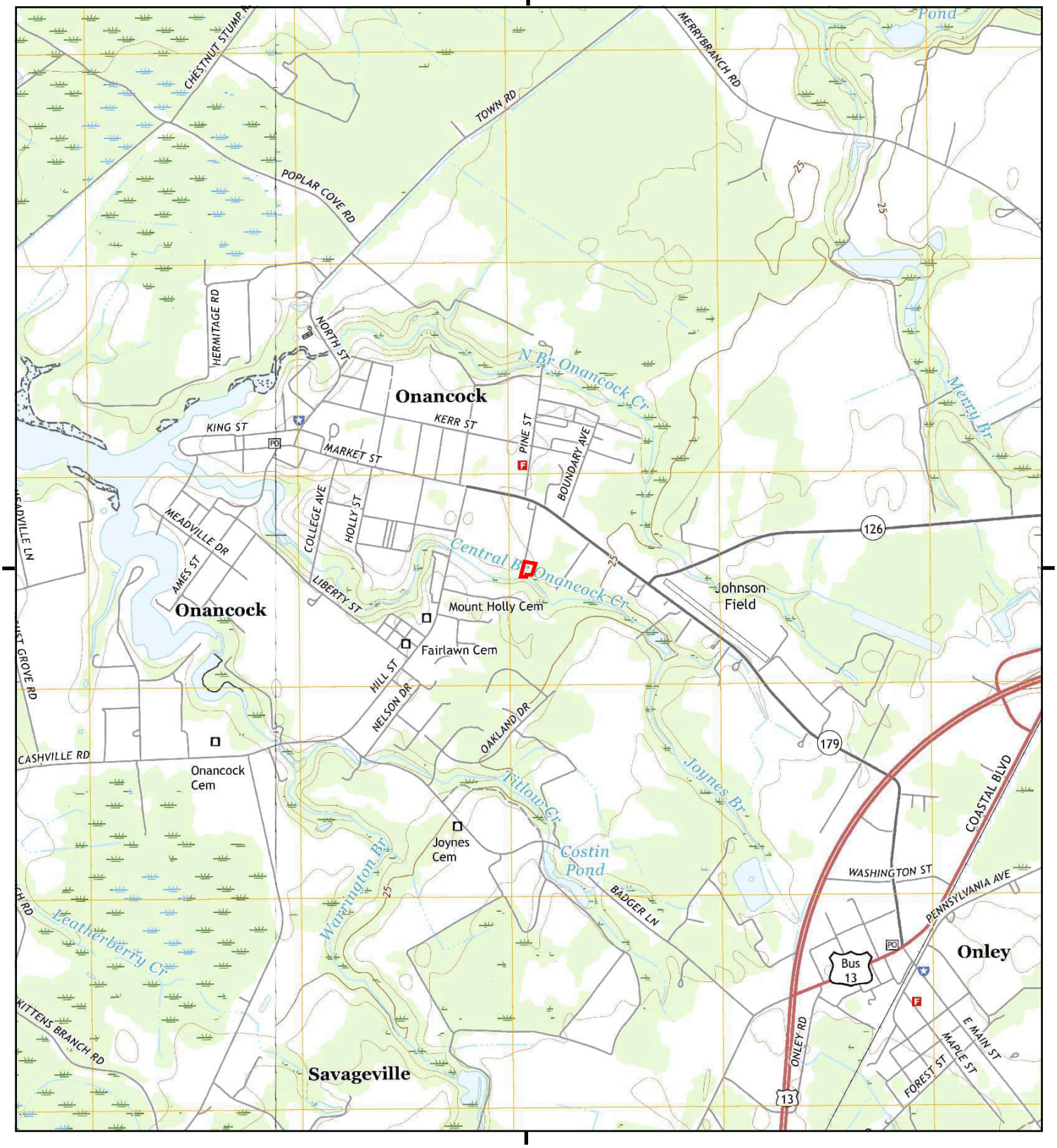

This report includes information from the following map sheet(s).

0 Miles 0.25 0.5 1 1.5

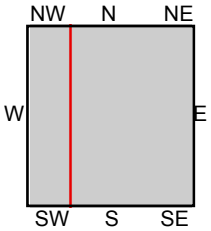

TP, Accomac, 2016, 7.5-minute
W, Pungoteague, 2016, 7.5-minute

SITE NAME: Hartman Ave Pump Station
ADDRESS: Hartman Ave
Onancock, VA 23417
CLIENT: AECOM

N

Historical Topo Map

2013

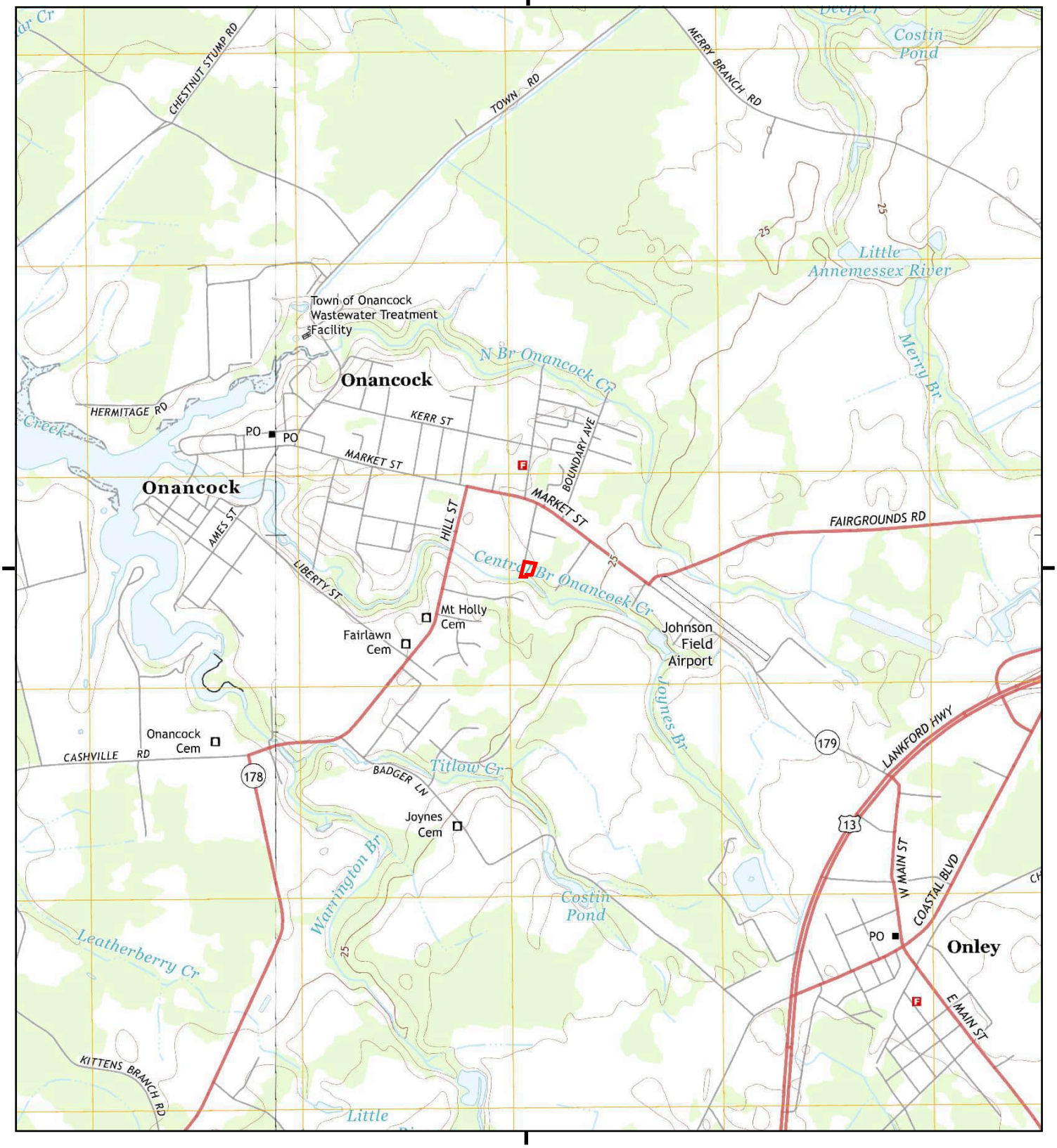

This report includes information from the following map sheet(s).

0 Miles 0.25 0.5 1 1.5

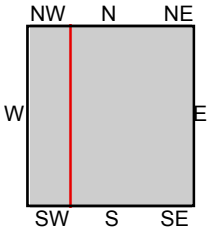

TP, Accomac, 2013, 7.5-minute
W, Pungoteague, 2013, 7.5-minute

SITE NAME: Hartman Ave Pump Station
ADDRESS: Hartman Ave
Onancock, VA 23417
CLIENT: AECOM

N

Historical Topo Map

1979

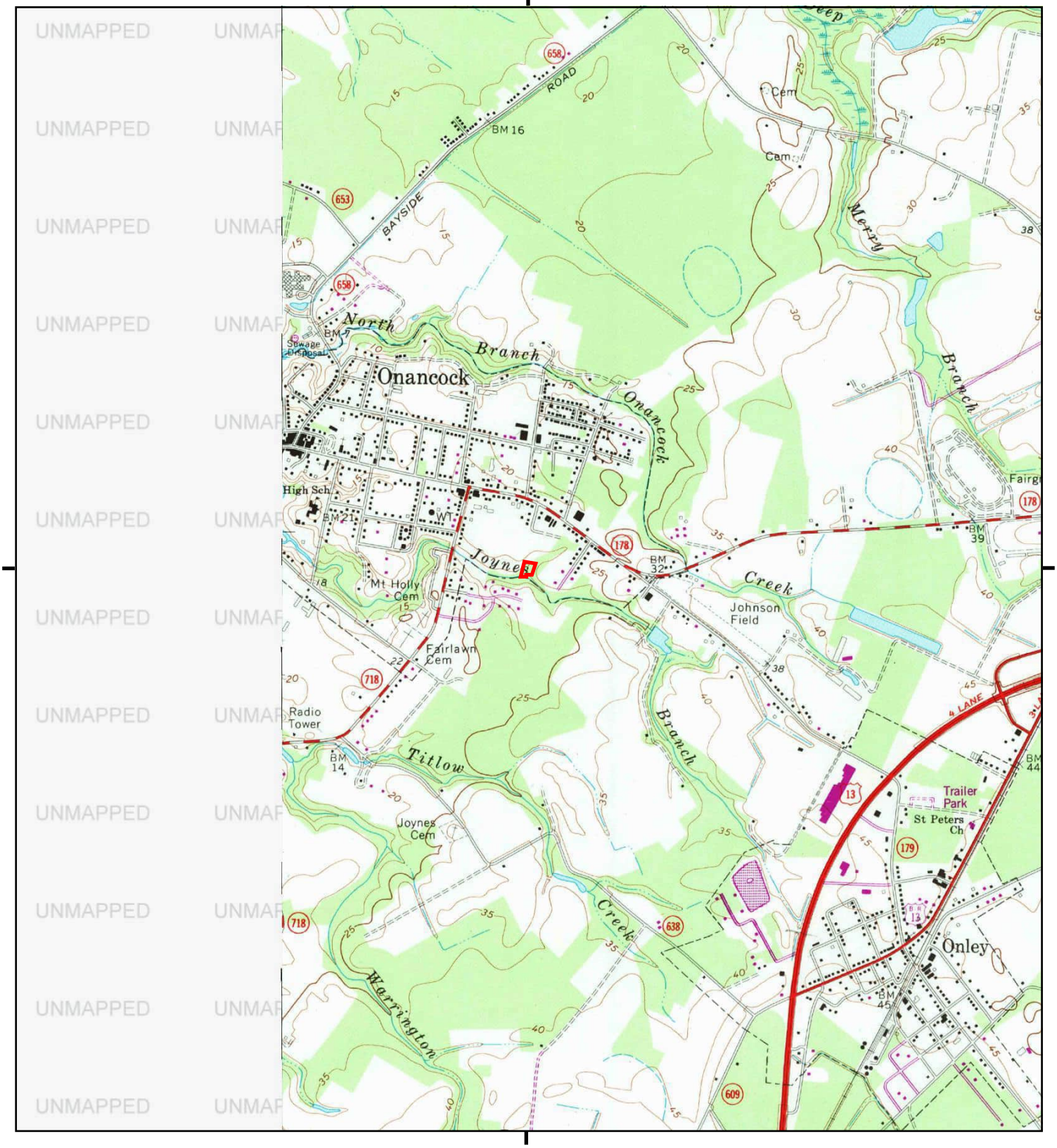

This report includes information from the following map sheet(s).

0 Miles 0.25 0.5 1 1.5

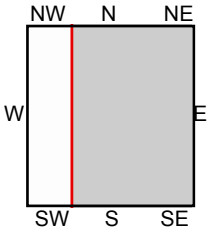

TP, Accomac, 1979, 7.5-minute

SITE NAME: Hartman Ave Pump Station
ADDRESS: Hartman Ave
Onancock, VA 23417
CLIENT: AECOM

N

Historical Topo Map

1978

This report includes information from the following map sheet(s).

0 Miles 0.25 0.5 1 1.5

NW N NE
W E
SW S SE

TP, Accomac, 1978, 7.5-minute

SITE NAME: Hartman Ave Pump Station
ADDRESS: Hartman Ave
Onancock, VA 23417
CLIENT: AECOM

N

Historical Topo Map

1968

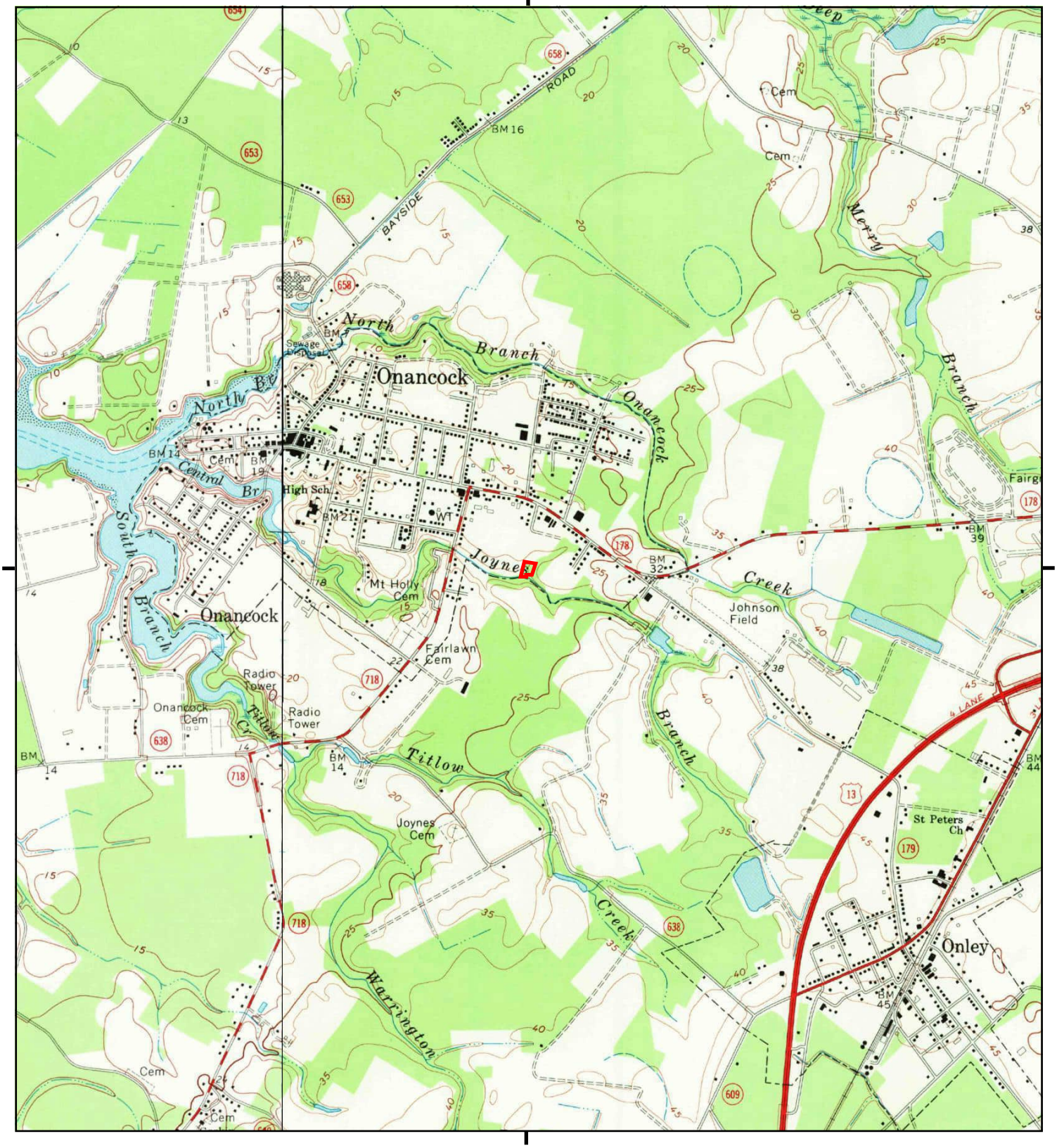

This report includes information from the following map sheet(s).

0 Miles 0.25 0.5 1 1.5

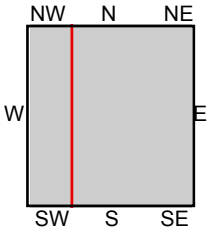

TP, Accomac, 1968, 7.5-minute
W, Pungoteague, 1968, 7.5-minute

SITE NAME: Hartman Ave Pump Station
ADDRESS: Hartman Ave
Onancock, VA 23417
CLIENT: AECOM

N

Historical Topo Map

1957

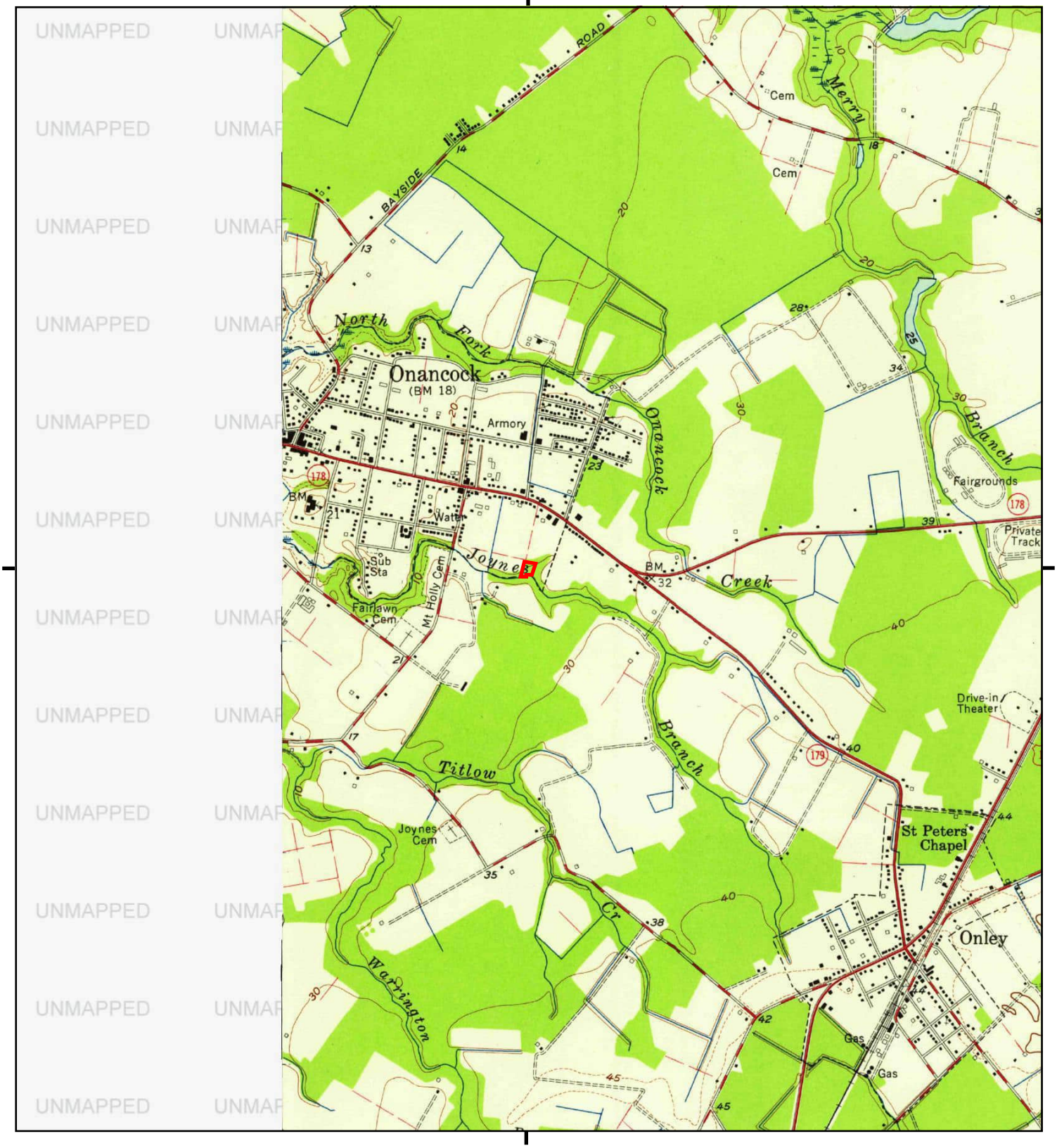

This report includes information from the following map sheet(s).

0 Miles 0.25 0.5 1 1.5

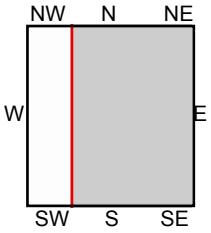

TP, Accomac, 1957, 7.5-minute

SITE NAME: Hartman Ave Pump Station
ADDRESS: Hartman Ave
Onancock, VA 23417
CLIENT: AECOM

N

Historical Topo Map

1935

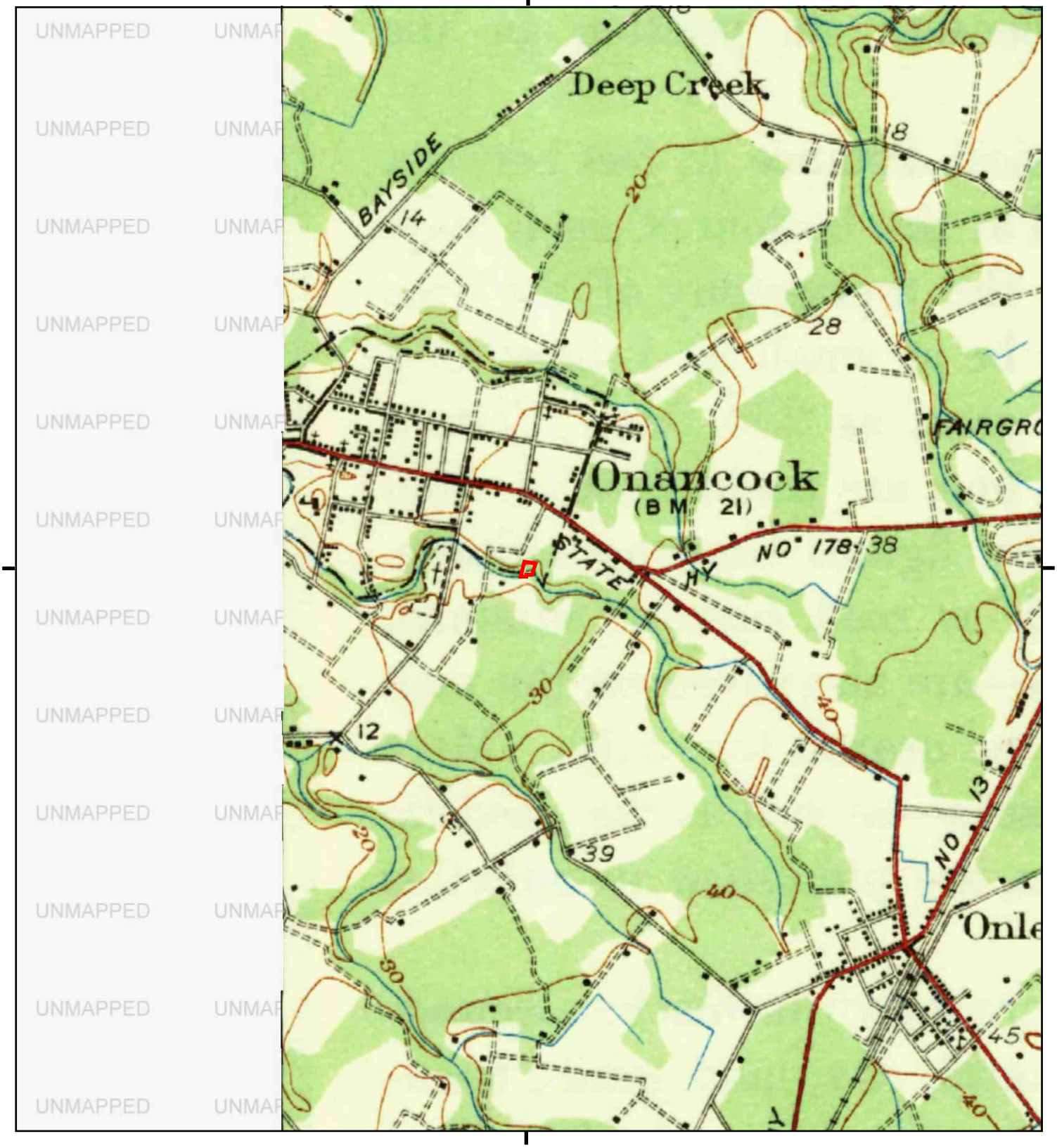

This report includes information from the following map sheet(s).

0 Miles 0.25 0.5 1 1.5

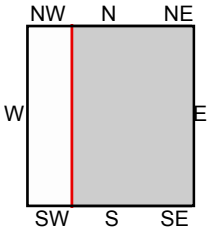

TP, Accomac, 1935, 15-minute

SITE NAME: Hartman Ave Pump Station
ADDRESS: Hartman Ave
Onancock, VA 23417
CLIENT: AECOM

N

Historical Topo Map

1931

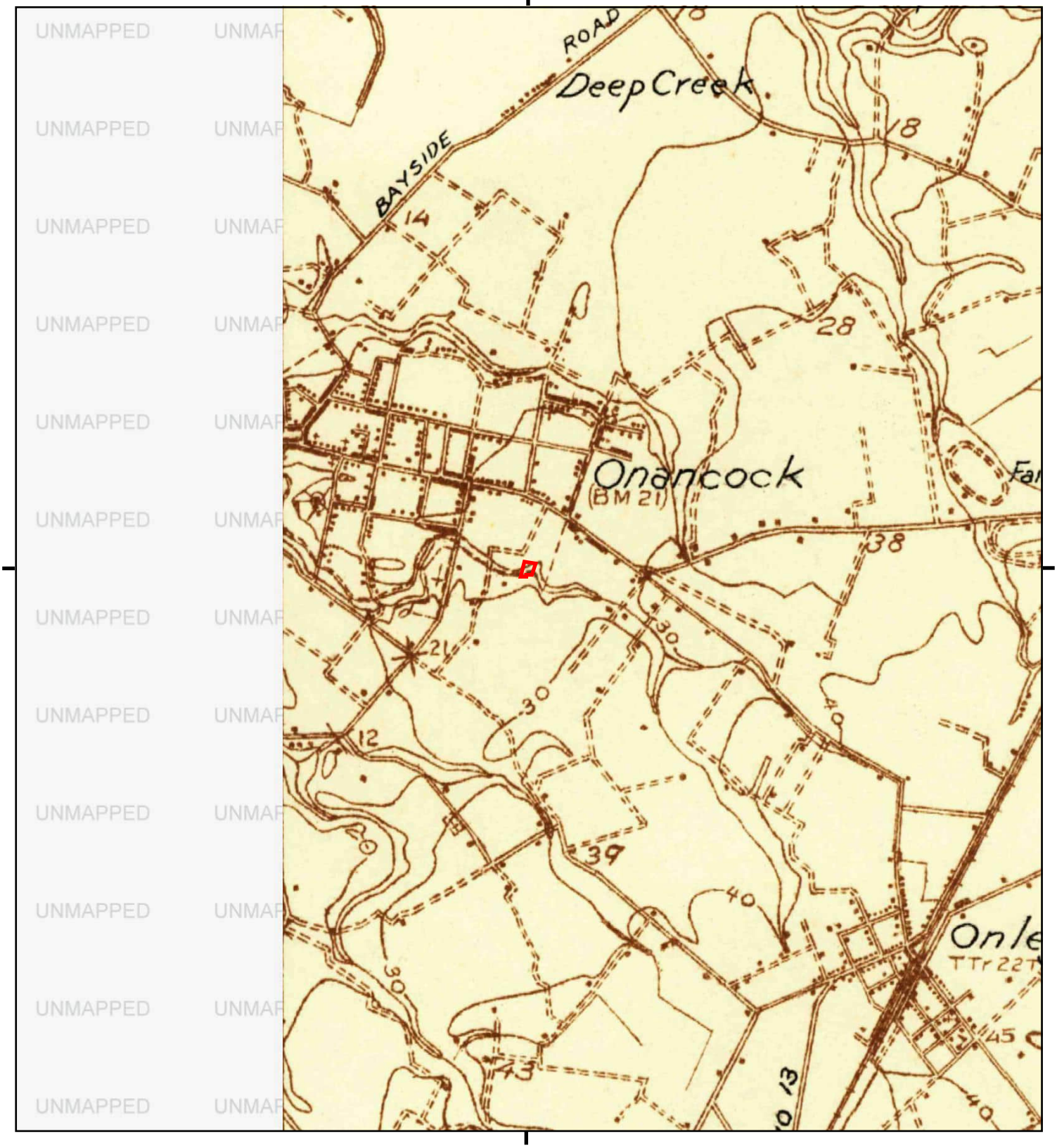

This report includes information from the following map sheet(s).

0 Miles 0.25 0.5 1 1.5

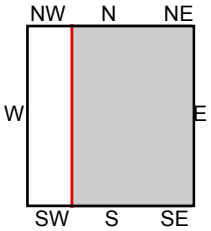

TP, Accomac, 1931, 15-minute

SITE NAME: Hartman Ave Pump Station
ADDRESS: Hartman Ave
Onancock, VA 23417
CLIENT: AECOM

N

Hartman Ave Pump Station
Hartman Ave
Onancock, VA 23417

Inquiry Number: 7025287.5
June 23, 2022

The EDR-City Directory Image Report

Environmental Data Resources Inc

6 Armstrong Road
Shelton, CT 06484
800.352.0050
www.edrnet.com

TABLE OF CONTENTS

SECTION

Executive Summary

Findings

City Directory Images

Thank you for your business.
Please contact EDR at 1-800-352-0050
with any questions or comments.

Disclaimer - Copyright and Trademark Notice

This Report contains certain information obtained from a variety of public and other sources reasonably available to Environmental Data Resources, Inc. It cannot be concluded from this Report that coverage information for the target and surrounding properties does not exist from other sources. **NO WARRANTY EXPRESSED OR IMPLIED, IS MADE WHATSOEVER IN CONNECTION WITH THIS REPORT. ENVIRONMENTAL DATA RESOURCES, INC. SPECIFICALLY DISCLAIMS THE MAKING OF ANY SUCH WARRANTIES, INCLUDING WITHOUT LIMITATION, MERCHANTABILITY OR FITNESS FOR A PARTICULAR USE OR PURPOSE. ALL RISK IS ASSUMED BY THE USER. IN NO EVENT SHALL ENVIRONMENTAL DATA RESOURCES, INC. BE LIABLE TO ANYONE, WHETHER ARISING OUT OF ERRORS OR OMISSIONS, NEGLIGENCE, ACCIDENT OR ANY OTHER CAUSE, FOR ANY LOSS OR DAMAGE, INCLUDING, WITHOUT LIMITATION, SPECIAL, INCIDENTAL, CONSEQUENTIAL, OR EXEMPLARY DAMAGES. ANY LIABILITY ON THE PART OF ENVIRONMENTAL DATA RESOURCES, INC. IS STRICTLY LIMITED TO A REFUND OF THE AMOUNT PAID FOR THIS REPORT.** Purchaser accepts this Report "AS IS". Any analyses, estimates, ratings, environmental risk levels or risk codes provided in this Report are provided for illustrative purposes only, and are not intended to provide, nor should they be interpreted as providing any facts regarding, or prediction orforecast of, any environmental risk for any property. Only a Phase I Environmental Site Assessment performed by an environmental professional can provide information regarding the environmental risk for any property. Additionally, the information provided in this Report is not to be construed as legal advice.

Copyright 2020 by Environmental Data Resources, Inc. All rights reserved. Reproduction in any media or format, in whole or in part, of any report or map of Environmental Data Resources, Inc. or its affiliates is prohibited without prior written permission.

EDR and its logos (including Sanborn and Sanborn Map) are trademarks of Environmental Data Resources, Inc. or its affiliates. All other trademarks used herein are the property of their respective owners.

EXECUTIVE SUMMARY

DESCRIPTION

Environmental Data Resources, Inc.'s (EDR) City Directory Report is a screening tool designed to assist environmental professionals in evaluating potential liability on a target property resulting from past activities. EDR's City Directory Report includes a search of available city directory data at 5 year intervals.

RECORD SOURCES

EDR's Digital Archive combines historical directory listings from sources such as Cole Information and Dun & Bradstreet. These standard sources of property information complement and enhance each other to provide a more comprehensive report.

EDR is licensed to reproduce certain City Directory works by the copyright holders of those works. The purchaser of this EDR City Directory Report may include it in report(s) delivered to a customer. Reproduction of City Directories without permission of the publisher or licensed vendor may be a violation of copyright.

Data by infoUSA®

Copyright©2008
All Rights Reserved

RESEARCH SUMMARY

The following research sources were consulted in the preparation of this report. A check mark indicates where information was identified in the source and provided in this report.

Year	Target Street	Cross Street	Source
2017	☑	☐	EDR Digital Archive
2014	☑	☐	EDR Digital Archive
2010	☑	☐	EDR Digital Archive
2005	☑	☐	EDR Digital Archive
2000	☑	☐	EDR Digital Archive
1995	☑	☐	EDR Digital Archive
1992	☑	☐	EDR Digital Archive

FINDINGS

TARGET PROPERTY STREET

Hartman Ave
Onancock, VA 23417

Year	*CD Image*	*Source*

HARTMAN AVE

2017	pg A1	EDR Digital Archive
2014	pg A2	EDR Digital Archive
2010	pg A3	EDR Digital Archive
2005	pg A4	EDR Digital Archive
2000	pg A5	EDR Digital Archive
1995	pg A6	EDR Digital Archive
1992	pg A7	EDR Digital Archive

FINDINGS

CROSS STREETS

No Cross Streets Identified

City Directory Images

Target Street	Cross Street	Source
✓	-	EDR Digital Archive

HARTMAN AVE 2017

5	EASTERN SHORE COMMUNITY SERVICES BOA
6	WILLIAMS, KATHRYN A
12	GF HORNE ASSISTED LIVING COMMUNITY

Target Street	Cross Street	Source
✓	-	EDR Digital Archive

HARTMAN AVE 2014

2	HARTMAN, JERRY F
4	OCCUPANT UNKNOWN,
5	DAZEVEDO, HELEN
	EASTERN SHORE COMMUNITY SERVICES BOA
	HARTMAN HOUSE
6	WILLIAMS, KATHRYN A
12	GF HORNE ASSISTED LIVING COMMUNITY

Target Street	Cross Street	Source
✓	-	EDR Digital Archive

HARTMAN AVE 2010

2	HARTMAN, JERRY F
3	EASTERN SHSORE COMMUNITY SVC
4	TRADER, BILLY J
5	DAZEVEDO, HELEN
	EASTERN SHORE COMMUNITY SVC
6	WILLIAMS, KATHRYN C
12	G F HORNE ASSISTED LIVING COMM

Target Street	Cross Street	Source
✓	-	EDR Digital Archive

HARTMAN AVE 2005

2	HARTMAN, JERRY F
4	TRADER, BILLY
5	EASTERN SHORE COMMUNITY SERVICES BOA
	HARTMAN AND CARDINAL
	KILMON, PAT W
6	WILLIAMS, KATHRYN C
12	COMMUNITY LIVING HOMES
	CONQUEST, KATHERINE
	GF HORNE ASSISTED LIVING COMMUNITY
	MASON, DICKIE
	TROWER, CATHERINE

Target Street	Cross Street	Source
✓	-	EDR Digital Archive

HARTMAN AVE 2000

3	CARDINAL HOUSE
	EASTERN SHOR COMMUNITY SERVICES BD CARD HOUSE
5	EASTERN SHOR COMMUNITY SERVICES BD HARTMAN HOUSE
	EASTERN SHORE COMMUNITY SERVICES BOARD
	HARTMAN HOUSE
6	WILLIAMS, KATHRYN C
12	COMMUNITY LIVING HOMES

Target Street	Cross Street	Source
✓	-	EDR Digital Archive

HARTMAN AVE 1995

5	HICKMAN, EFFIE
	KILMON, PAT W
12	COMMUNITY LIVING HOMES INC

Target Street	Cross Street	Source
✓	-	EDR Digital Archive

HARTMAN AVE 1992

5	KILMON, PAT W RUSSELL, V E SMITH, RENNIE S

Hartman Ave Pump Station

Hartman Ave

Onancock, VA 23417

Inquiry Number: 7025287.3

June 21, 2022

Certified Sanborn® Map Report

6 Armstrong Road, 4th floor
Shelton, CT 06484
Toll Free: 800.352.0050
www.edrnet.com

Certified Sanborn® Map Report

06/21/22

Site Name:	Client Name:
Hartman Ave Pump Station	AECOM
Hartman Ave	12420 Milestone Center Drive
Onancock, VA 23417	Germantown, MD 20876-0000
EDR Inquiry # 7025287.3	Contact: Justin Derato

The Sanborn Library has been searched by EDR and maps covering the target property location as provided by AECOM were identified for the years listed below. The Sanborn Library is the largest, most complete collection of fire insurance maps. The collection includes maps from Sanborn, Bromley, Perris & Browne, Hopkins, Barlow, and others. Only Environmental Data Resources Inc. (EDR) is authorized to grant rights for commercial reproduction of maps by the Sanborn Library LLC, the copyright holder for the collection. Results can be authenticated by visiting www.edrnet.com/sanborn.

The Sanborn Library is continually enhanced with newly identified map archives. This report accesses all maps in the collection as of the day this report was generated.

Certified Sanborn Results:

Certification # E697-48A6-9D2D

PO # NA

Project Hartman Ave Pump Station-HRSD

UNMAPPED PROPERTY

This report certifies that the complete holdings of the Sanborn Library, LLC collection have been searched based on client supplied target property information, and fire insurance maps covering the target property were not found.

Sanborn® Library search results

Certification #: E697-48A6-9D2D

The Sanborn Library includes more than 1.2 million fire insurance maps from Sanborn, Bromley, Perris & Browne, Hopkins, Barlow and others which track historical property usage in approximately 12,000 American cities and towns. Collections searched:

- ✔ Library of Congress
- ✔ University Publications of America
- ✔ EDR Private Collection

The Sanborn Library LLC Since 1866™

Limited Permission To Make Copies

AECOM (the client) is permitted to make up to FIVE photocopies of this Sanborn Map transmittal and each fire insurance map accompanying this report solely for the limited use of its customer. No one other than the client is authorized to make copies. Upon request made directly to an EDR Account Executive, the client may be permitted to make a limited number of additional photocopies. This permission is conditioned upon compliance by the client, its customer and their agents with EDR's copyright policy; a copy of which is available upon request.

Disclaimer - Copyright and Trademark Notice

This Report contains certain information obtained from a variety of public and other sources reasonably available to Environmental Data Resources, Inc. It cannot be concluded from this Report that coverage information for the target and surrounding properties does not exist from other sources. NO WARRANTY EXPRESSED OR IMPLIED, IS MADE WHATSOEVER IN CONNECTION WITH THIS REPORT. ENVIRONMENTAL DATA RESOURCES, INC. SPECIFICALLY DISCLAIMS THE MAKING OF ANY SUCH WARRANTIES, INCLUDING WITHOUT LIMITATION, MERCHANTABILITY OR FITNESS FOR A PARTICULAR USE OR PURPOSE. ALL RISK IS ASSUMED BY THE USER. IN NO EVENT SHALL ENVIRONMENTAL DATA RESOURCES, INC. BE LIABLE TO ANYONE, WHETHER ARISING OUT OF ERRORS OR OMISSIONS, NEGLIGENCE, ACCIDENT OR ANY OTHER CAUSE, FOR ANY LOSS OF DAMAGE, INCLUDING, WITHOUT LIMITATION, SPECIAL, INCIDENTAL, CONSEQUENTIAL, OR EXEMPLARY DAMAGES. ANY LIABILITY ON THE PART OF ENVIRONMENTAL DATA RESOURCES, INC. IS STRICTLY LIMITED TO A REFUND OF THE AMOUNT PAID FOR THIS REPORT. Purchaser accepts this Report "AS IS". Any analyses, estimates, ratings, environmental risk levels or risk codes provided in this Report are provided for illustrative purposes only, and are not intended to provide, nor should they be interpreted as providing any facts regarding, or prediction or forecast of, any environmental risk for any property. Only a Phase I Environmental Site Assessment performed by an environmental professional can provide information regarding the environmental risk for any property. Additionally, the information provided in this Report is not to be construed as legal advice.

Copyright 2022 by Environmental Data Resources, Inc. All rights reserved. Reproduction in any media or format, in whole or in part, of any report or map of Environmental Data Resources, Inc., or its affiliates, is prohibited without prior written permission.

EDR and its logos (including Sanborn and Sanborn Map) are trademarks of Environmental Data Resources, Inc. or its affiliates. All other trademarks used herein are the property of their respective owners.

Appendix D

Site Photographs

AECOM

PHOTOGRAPHIC LOG

Client Name:	Site Location:	Project No.
Hampton Roads Sanitation District, Inc.	Hartman Avenue, Onancock, Virginia 23417	60669159

Photo No.	Date:
1	6/23/22

Direction Photo Taken:

East

Description:

Hartman Avenue pump station.

Photo No.	Date:
2	6/23/22

Direction Photo Taken:

East

Description:

Hartman Avenue pump station sign.

AECOM

PHOTOGRAPHIC LOG

Client Name:	Site Location:	Project No.
Hampton Roads Sanitation District, Inc.	Hartman Avenue, Onancock, Virginia 23417	60669159

Photo No.	Date:
3	6/23/22

Direction Photo Taken:

East

Description:

View of the Hartman Avenue pump station.

Photo No.	Date:
4	6/23/22

Direction Photo Taken:

North

Description:

Emergency generator and diesel belly tank (aboveground storage tank).

AECOM

PHOTOGRAPHIC LOG

Client Name:	Site Location:	Project No.
Hampton Roads Sanitation District, Inc.	Hartman Avenue, Onancock, Virginia 23417	60669159

Photo No.	Date:
5	6/23/22

Direction Photo Taken:

South

Description:

Hartman Avenue pump station facing south. View of two pad-mounted transformers.

Photo No.	Date:
6	6/23/22

Direction Photo Taken:

South

Description:

Hartman Avenue pump station with spoil piles on east adjacent property.

AECOM

PHOTOGRAPHIC LOG

Client Name:	Site Location:	Project No.
Hampton Roads Sanitation District, Inc.	Hartman Avenue, Onancock, Virginia 23417	60669159

Photo No.	Date:
7	6/23/22

Direction Photo Taken:

South

Description:

Hartman avenue pump station with adjacent spoils and pad mounted transformer.

Photo No.	Date:
8	6/23/22

Direction Photo Taken:

N/A

Description:

Sewer conduit stockpile adjacent to the east of the subject property.

AECOM

PHOTOGRAPHIC LOG

Client Name:	Site Location:	Project No.
Hampton Roads Sanitation District, Inc.	Hartman Avenue, Onancock, Virginia 23417	60669159

Photo No.	Date:
9	6/23/22

Direction Photo Taken:

N/A

Description:

Closer view of spoils adjacent to the east of the Hartman Avenue pump station.

Photo No.	Date:
10	6/23/22

Direction Photo Taken:

Southwest

Description:

View of the Hartman Avenue pump station.

AECOM

PHOTOGRAPHIC LOG

Client Name:	Site Location:	Project No.
Hampton Roads Sanitation District, Inc.	Hartman Avenue, Onancock, Virginia 23417	60669159

Photo No.	Date:	
11	6/23/22	

Direction Photo Taken:

Southwest

Description:

Hartman Avenue pump station emergency generator and electrical/control boxes.

Photo No.	Date:	
12	6/23/22	

Direction Photo Taken:

N/A

Description:

Emergency Generator belly tank and rust staining on the concrete pad.

AECOM

PHOTOGRAPHIC LOG

Client Name:	Site Location:	Project No.
Hampton Roads Sanitation District, Inc.	Hartman Avenue, Onancock, Virginia 23417	60669159

Photo No.	Date:
13	6/23/22

Direction Photo Taken:

West

Description:

West adjacent baseball fields, water supply wells, and water tower.

Photo No.	Date:
14	6/23/22

Direction Photo Taken:

South

Description:

Gravel access road to the subject property.

AECOM

PHOTOGRAPHIC LOG

Client Name:	Site Location:	Project No.
Hampton Roads Sanitation District, Inc.	Hartman Avenue, Onancock, Virginia 23417	60669159

Photo No.	Date:
15	6/23/22

Direction Photo Taken:

N/A

Description:

Vacant north adjacent property.

Photo No.	Date:
16	6/23/22

Direction Photo Taken:

N/A

Description:

Vacant north adjacent buildings.

AECOM

PHOTOGRAPHIC LOG

Client Name:	Site Location:	Project No.
Hampton Roads Sanitation District, Inc.	Hartman Avenue, Onancock, Virginia 23417	60669159

Photo No.	Date:
17	6/23/22

Direction Photo Taken:

N/A

Description:

South adjacent property.

Photo No.	Date:
18	6/23/22

Direction Photo Taken:

N/A

Description:

South limit of disturbance (LOD) markings adjacent to pumping station fence.

AECOM

PHOTOGRAPHIC LOG

Client Name:	Site Location:	Project No.
Hampton Roads Sanitation District, Inc.	Hartman Avenue, Onancock, Virginia 23417	60669159

Photo No.	Date:
19	6/23/22

Direction Photo Taken:

N/A

Description:

West adjacent water tower.

Photo No.	Date:
20	6/23/22

Direction Photo Taken:

N/A

Description:

Water supply well on west adjacent property.

AECOM

PHOTOGRAPHIC LOG

Client Name:	Site Location:	Project No.
Hampton Roads Sanitation District, Inc.	Hartman Avenue, Onancock, Virginia 23417	60669159

Photo No.	Date:
21	6/23/22

Direction Photo Taken:

N/A

Description:

West adjacent property containing a water supply well and city of Onancock water tower.

Photo No.	Date:
22	6/23/22

Direction Photo Taken:

N/A

Description:

Adjacent property water supply well identification tag.

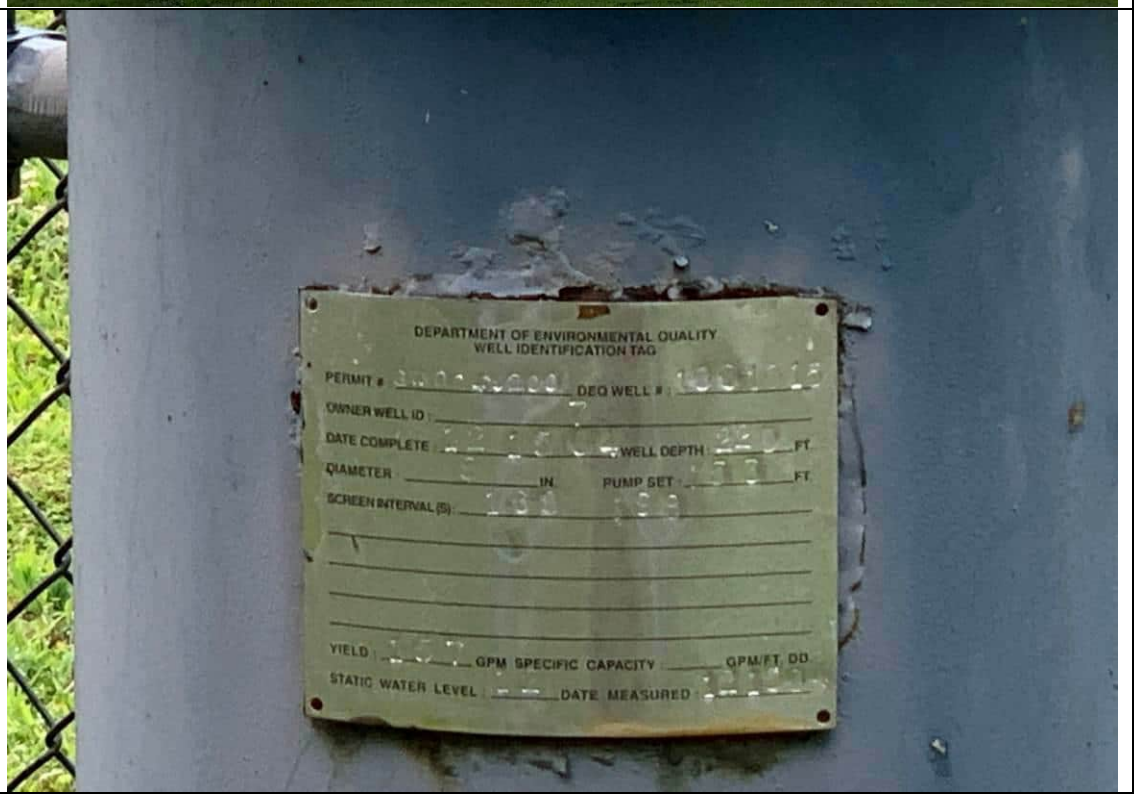

AECOM

PHOTOGRAPHIC LOG

Client Name:	Site Location:	Project No.
Hampton Roads Sanitation District, Inc.	Hartman Avenue, Onancock, Virginia 23417	60669159

Photo No.	Date:
23	6/23/22

Direction Photo Taken:

N/A

Description:

Northwest adjacent properties.

Photo No.	Date:
24	6/23/22

Direction Photo Taken:

North

Description:

Gravel access road.

AECOM

PHOTOGRAPHIC LOG

Client Name:	Site Location:	Project No.
Hampton Roads Sanitation District, Inc.	Hartman Avenue, Onancock, Virginia 23417	60669159

Photo No.	Date:
25	6/23/22

Direction Photo Taken:

North

Description:

Gravel access road.

Appendix E
Qualifications of Environmental Professional

Nicholas R. Patterson, CPESC

Senior Environmental Scientist, EHS/Air Southeast

Areas of Expertise

Environmental Regulatory Compliance Management

Environmental Planning and Permitting

Environmental Due Diligence/Site Assessment

Environmental Construction Management/Inspection

Erosion and Sediment Control

Education

B.S., Environmental Science, Juniata College, 2002

Years of Experience

With AECOM	17
With Other Firms	3

Training and Certifications

Certified Professional in Erosion and Sediment Control

AECOM Certified Project Manager

40-hour & Annual 8-hour Refresher Training for Hazardous Waste Site Operations and Emergency Response (HAZWOPER)

10-Hour OSHA Safety Training for Roadway Construction Workers

Summary

Mr. Patterson is a Senior Environmental Professional and Project Manager with over 19 years of experience in environmental consulting serving clients in the federal, municipal and private sectors. Mr. Patterson's experience includes multi-media environmental regulatory compliance and permitting (NPDES, RCRA, EPCRA, SPCC, etc.), environmental due diligence (environmental assessments and investigations), pollution prevention planning, and environmental construction management. Mr. Patterson meets the qualifications of an ASTM Standard E 1527-13 Environmental Professional, is a Certified Professional in Erosion and Sediment Control through a national organization, and has over 5 years of project management and team leadership experience.

Experience

Astrazeneca PLP, Environmental Compliance Services, Maryland, Project Manager, 2020 - preset. Project manager for wastewater compliance monitoring program at two separate Astrazeneca facilities located in Maryland. Wastewater program includes monthly and quarterly composite sampling of wastewater using an automated sampler, data evaluation, and preparation of Discharge Monitoring reports (DMRs).

Project Manager for a Legionella sampling program at AstraZeneca's Frederick Manufacturing Center. Legionella program involves the annual collection of bulk water and swab samples from approximately 60 distal locations following Center for Disease Control Legionella sampling protocols, data evaluation, reporting, and coordination between AECOM Certified Industrial Hygienists and Astrazeneca project managers.

PECO Energy Company, Annual EPCRA Reporting, Philadelphia, Pennsylvania, Environmental Scientist, 2022. Completed the EPCRA SARA 312 reporting for approximately 90 PECO sites that exceed the chemical storage reporting thresholds. Reporting activities included completing organizing chemical storage data for each site, preparing reporting documentation through Pennsylvania's online portal, drafting cover letters, obtaining checks, and preparing certified mailings.

Shell and Jiffy Lube International (JLI), Environmental Due Diligence, Nationwide, Project Manager/Environmental Professional. 2019 - present. Project Manager (and Environmental Professional per ASTM standards) for nationwide site assessments for Shell and JLI in support of property purchases and lease transactions for Shell and JLI sites. Site assessments performed in accordance with ASTM and AAI standards. Responsibilities include managing the contract, review of scopes of work and cost proposals, execution of work orders, leadership and mentoring of staff, quality control/senior review of reports, preparation of reports, and

coordination with USPS project managers, staff from multiple AECOM offices, and subcontractors.

US Army Corps of Engineers, Phase I Environmental Assessment, 56.5-Acre Parcel at WSMR, Project Manager and Environmental Professional. 2022. Project Manager (and Environmental Professional per ASTM standards) for Phase I ESA performed for a 56.5-acre parcel of land at White Sands Missile Range (WSMR) in New Mexico. The ESA was performed in support of a property transaction and was performed in accordance with ASTM and AAI standards

Confidential Client, Environmental Due Diligence, Maryland/Virginia, Environmental Due Diligence Lead, 2021: AECOM provided full site due diligence services in the mid-Atlantic region for a confidential information technology client to support development of two large data centers in the region. As the Environmental due diligence manager, Mr. Patterson was responsible for the successful completion of environmental due diligence programs following ASTM Standard E 1527-13 and the EPA's standards for All Appropriate Inquiries (AAI). Project tasks included the coordination and review of Phase I ESAs to identify recognized environmental conditions (RECs) and the development and execution Phase II subsurface investigation programs to further characterize or delineate the extent of environmental impacts. Subsurface investigations have included soil sampling by conventional auger drilling, direct push technology, and hand auguring techniques, groundwater sampling using temporary and permanently installed monitoring wells, and geophysical investigations. Mr. Patterson serves as the ASTM Standard E 1527-13 Environmental Professional.

DC Water and Sewer Authority, Long Term CSO Control Project, Washington, DC, Environmental Scientist, 2011 – present: AECOM is providing environmental support for the planning, design, and construction of the District of Columbia Water and Sewer Authority (DC Water) DC Clean Rivers Project for the control of combined sewer overflows (CSOs) to the Anacostia and Potomac Rivers. Project tasks include completion of subsurface environmental investigation to pre-characterize environmental conditions prior to construction commencement, Phase I environmental due diligence services, and environmental compliance monitoring during construction. Specific tasks include soil, groundwater, surface water, wastewater, and air, investigations and reviews of existing environmental data to evaluate the potential presence of hazardous or toxic constituents which may be encountered during construction, construction site and contractor work plan environmental audits focusing on erosion and sediment control, SPCC, SWPPP (water and wastewater) , hazardous material storage, and waste management compliance as well as impacts to sensitive natural resources. Additionally, Mr. Patterson coordinates with District agencies to acquire required project permits; reviews contractor work plans to ensure compliance with Federal and District environmental regulations and standards and conducts environmental compliance inspections of active construction to confirm compliance with contract documents as well as Federal and District environmental regulations.

Multiple Clients, Phase I Environmental Site Assessments (ESAs), Nationwide, Project Manager/Environmental Professional, 2011 – present. Project Manager (and Environmental Professional per ASTM standards) and technical specialist for multiple ASTM/AAI compliant Phase I ESAs for various residential, commercial, and industrial sites for confidential clients. Tasks included site visits, regulatory agency reviews,

preparation of Phase I ESA reports, and quality control/senior review of reports, as required ASTM E 1527-13.

United Iron and Metal, Phase II Environmental Assessment, Baltimore, Maryland, Project Manager, 2019. Project Manager and Environmental Scientist for subsurface investigations at two sites to evaluate the subsurface conditions at select locations based on the findings of a previous Phase II investigation. Project tasks included project planning, subsurface soil and groundwater sampling, data evaluation, and reporting.

US Government Services Administration, Phase I and II Environmental Site Assessments, CDC NIOSH Site, Senior Environmental Specialist. 2018. Senior Environmental Specialist for Phase I and II ESAs intended to document the environmental condition of a parcel of real property in support of a potential property transaction involving the GSA/CDC.

District Department of Transportation (DDOT), South Capitol Street Bridge Project, Washington, DC, Environmental Scientist, 2019: Mr. Patterson supported the AECOM Transportation Business Line by preparing compliance management plans for use during construction activities. Mr. Patterson oversaw the development of a Fugitive Dust Plan and a Rodent Control Plan to be implemented during construction.

United States Postal Service (USPS), Environmental Compliance Reviews (ECR), Team Leader/Environmental Compliance Specialist/, Nationwide, 2013-Present: Compliance Specialist and Team Leader for multi-media compliance audits at USPS mail processing and distribution centers, vehicle maintenance facilities, and USPS training facilities throughout the United States. Duties include identification of potentially applicable federal, state, and local regulations and laws; assessment of compliance with all applicable requirements; communication of noncompliance issues orally and in writing; and use of ListBuilder and the USPS Environmental Tool Kit. Also identify practices and situations that could potentially lead to future noncompliance along with opportunities for pollution prevention. Also reviewed and updated SWPPPs, SPCC Plans, UST OMM Plans, and air permits.

Norfolk Southern Railroad, Environmental Audit Program, Nationwide, Environmental Scientist / Audit Team Member, 2019-2020: Member of the environmental auditing team for the Norfolk Southern Environmental Auditing program. The auditing program included review of facility operations and conditions with respect to the expectations of corporate and governmental environmental standards and good environmental management practices. The audits focused on solid and hazardous waste management, spill prevention control and countermeasures (SPCC), storm water, wastewater, PCBs, and community right-to-know and hazmat transport. Audit findings were communicated both orally and through written gap assessments.

Church & Dwight, Environmental Audit Program, Environmental Scientist/Lead Auditor, Richmond, Virginia & York, Pennsylvania, 2017 - 2022: Mr. Patterson served as the lead auditor for internal environmental compliance audits of Church & Dwight manufacturing facilities in Richmond, VA and York, PA. The auditing program included review of facility operations and conditions with respect to the expectations of corporate and governmental environmental standards and good environmental management practices. The audits focused on waste management, storm water, wastewater, and air emissions following STP auditing protocols.

Audit findings were communicated both orally and through written reporting protocols.

Howard County Bureau of Environmental Services (BES), Environmental Compliance Assessments (ECAs) and Environmental Training, Maryland, Environmental Scientist, Maryland, 2017-2019: Conducted ECAs at County facilities, including highway and fleet shops, recreation and parks shops, and police and fire stations, and prepared reports with findings and corrective actions. The ECAs focused on waste management, spill prevention control and countermeasures (SPCC), storm water, wastewater, and storage tank management. Based on the ECA findings, prepared and provided environmental compliance training for County staff. The purpose of the training sessions was to meet the regulatory training requirements for SWPPPs, SPCC regulations and to provide general environmental compliance information.

Washington Metropolitan Area Transit Authority (WMATA), Environmental Permitting and Compliance, Washington, DC, Environmental Scientist, 2011 – 2019: Technical resource for multiple projects related to broad range of environmental planning and compliance services. Provided environmental permitting and compliance services for multiple WMATA operations and facilities including bus and railcar maintenance facilities, dewatering and groundwater treatment operations, printing operations, and other operations. Tasks have included preparation of various environmental plans (i.e., SWPPPs, SPCC Plans, HWMPs, etc.), regulatory reviews and summary updates, preparing stormwater and wastewater permit applications, permit compliance audits, conducting annual stormwater site compliance evaluations, preparing annual compliance reports, and conducting non-stormwater discharge assessments.

MD State Highway Administration (SHA), Intercounty Connector Project-ICC Corridor Partners (URS joint venture), Rockville MD, Lead Environmental Compliance Inspector, 2008 - 2011: The ICC is an 18-mile limited access highway constructed in an environmentally sensitive area in central Maryland north of Washington D.C. Responsible for environmental compliance oversight and management of the first $480M construction contract. Responsibilities included working with both the client and the contractor in reviewing, assessing and modifying site-specific environmental controls throughout the project corridor and ensuring project compliance with environmental permits containing hundreds of special condition commitments and quality controls. Mr. Patterson observed and identified environmental controls deficiencies in site specific erosion and sediment controls, water treatment and discharge, petroleum storage and hazardous material compliance and worked with the contractor to resolve and initiate corrective actions. Mr. Patterson also served as the Erosion and Sediment Control Quality Assurance Inspector for several mitigation contracts through MD SHA's extensive QA program.

MD State Highway Administration/ VA Department of Transportation, Woodrow Wilson Bridge Project, Potomac Crossing Consultants (URS joint venture), Oxon Hill MD, Environmental Specialist, 2006 - 2008: The WWB project included the construction of two twin bridges crossing the Potomac River, the reconstruction of four major interchanges in Maryland and Virginia and a $50M environmental mitigation package. Mr. Patterson was an Environmental Specialist for the $2.5B mega-project. Responsibilities included environmental oversight and compliance inspection of construction activities to confirm environmental permit and

regulatory compliance. Compliance audits focused on site specific erosion and sediment control, dewatering techniques and discharge, petroleum storage and hazardous material compliance. He coordinated contractor activities and environmental permitting with several local and state agencies. Mr. Patterson supported additional construction monitoring programs including air, noise, wildlife and water quality sampling and also supported the mitigation (wetland creation, stream restoration, fish passage) monitoring program.

Howard County Bureau of Environmental Services (BES), Stormwater Monitoring, Maryland, Environmental Scientist. August 2014–September - Present. Task manager for stormwater monitoring at nine maintenance and operations facilities in Howard County, Maryland, including a water reclamation plant, a landfill, highway maintenance shops, and fleet facilities. Conducted quarterly visual stormwater monitoring and collected benchmark monitoring samples in accordance with NPDES stormwater discharge permit requirements. Tasks included coordinating teams of stormwater samplers to deploy to the nine sites during qualifying rain events, collecting stormwater from each outfall and documenting parameters such as color, clarity, oil sheen, odor, and floating or suspended solids, completing the associated documentation, coordinating with the lab for benchmark sampling, and preparing quarterly stormwater monitoring reports.

American Red Cross (ARC), Environmental Due Diligence, Nationwide, Program Manager/Project Manager/Environmental Professional. 2007 - present. Program Manager/Project Manager (and Environmental Professional per ASTM standards) for nationwide site assessments for the ARC in support of property donations and purchases, site development, and building renovations. Site assessments performed in accordance with ASTM and AAI standards and typically include property condition/environmental assessment, mold surveys, asbestos, lead, and radon sampling. Responsibilities include managing the contract, review of scopes of work and cost proposals, execution of work orders, leadership and mentoring of staff, quality control/senior review of reports, preparation of reports, and coordination with USPS project managers, staff from multiple AECOM offices, and subcontractors.

National Railroad Passenger Corporation (AMTRAK), Environmental Compliance Services, Nationwide, Environmental Scientist/ Project Manager, 2014-Present: AECOM is providing environmental support services to Amtrak facilities throughout the United States. Project tasks include Phase I and Phase II Environmental Due Diligence, Hazardous Materials (HazMat) Surveys, stormwater management planning (SWPPP) and material storage planning (SPCC). Mr. Patterson was the technical lead for all Phase I/II due diligence projects, SWPPP and SPCC plans preparation and coordinated field tasks and preparations of HazMat Removal Work Plans in support of Amtrak's ADA Stations Program, Passenger Information Display System (PIDS) Program and the State of Good Repair (SOGR) Program for Amtrak facilities located throughout Amtrak's Northeast Corridor. Mr. Patterson is the client point of contact for Amtrak's Mid-Atlantic and Southeastern Regions. Mr. Patterson's responsibilities as project manager included coordinating with local licensed and certified AECOM staff to complete the site HazMat survey, overseeing development of the project deliverables, and ensuring the project remained on task and within budget.

AECOM prepared site specific SWPPP and SPCC Plans for Amtrak repair and maintenance facilities, passenger stations and electrical substations. A nationwide SPCC template was developed to ensure consistency of plans between Amtrak facilities. Mr. Patterson ensured the projects remained on-task and on-budget, completed the site reviews, drafted the revised SPCC and SWPPP Plans and managed the deliverable through technical and QC review.

American University, Illicit Discharge Investigation, Washington, DC, Environmental Scientist/Task Manager, 2017-2018: Task manager for an illicit discharge investigation of the American University MS4 system. The objective of the investigation was to identify the presence of dry weather flow from seven MS4 outfalls and locate the source of discharges observed. Field investigation techniques employed included simple visual tracking, review of building and system construction drawings, dye testing, and field chemical testing. Prepared a summary report of the illicit discharge investigation that included the activities, findings, and conclusions of the investigation.

Marine Corp Base Quantico Illicit Discharge Investigation, Quantico, VA, Environmental Scientist, 2017: Completed an illicit discharge survey of approximately 225 outfalls at Marine Corp Base Quantico. Observed dry weather flows were tracked upstream and field screening of flow rate, temperature, turbidity, pH, chlorine, clarity, and fluoride was conducted.

Medimmune, LLC- Frederick Manufacturing Center, SPCC Compliance Update, Frederick, Maryland, Environmental Scientist, 2016

AECOM provided environmental support services to Medimmune LLC.'s Frederick Manufacturing Center. Project tasks include reviewing and updating a site specific SPCC Plan and completing an SPCC audit to confirm compliance with Federal and State regulations. Mr. Patterson ensured the project remained on-task and on-budget, completed the site review and audit, drafted the revised SPCC Plan and managed the deliverable through technical and QC review. Additional tasks include a completion of an environmental survey of the Former BP Solar Manufacturing Plant to identify the presence of residual solar panel production contaminants in settled dust.

W.R. GRACE, SPCC Compliance Updates, Baltimore, MD, Environmental Scientist, 2014-2016: AECOM provided environmental services for W.R. Grace's Baltimore facility. Project tasks include annual evaluation of current site operations and activities and updating the facilities SWPPP and SPCC Plans. AECOM evaluated current site conditions provided recommendation of corrective actions and BMPs. Mr. Patterson ensured the project remained on-task and on-budget, completed the site review and audit, drafted the revised SPCC and SWPPP Plans and managed the deliverable through technical and QC review.

Xerox Corporation, Environmental Compliance Services, Multiple Facilities Nationwide, Task Manager/Environmental Scientist. 2012 - 2015. Provided oversight and prepared environmental compliance reviews, health & safety audits, and SPCC plans for computer data centers. Tasks included reviewing state and federal regulations and preparing audit protocols for EHS audits; evaluating existing facility documentation for environmental compliance; conducting facility site inspections; preparing SPCC Plans; and recommending corrective actions and BMPs. Key compliance issues involved EPRCA/RCRA requirements for the facilities' uninterruptible power supplies, and air emissions and oil storage

compliance for emergency generators. An SPCC template was also developed to assure consistency of plans among corporate facilities.

Warrenton Training Center, Groundwater Monitoring Program, Warrenton, Virginia, Environmental Scientist, 2005-2009: Mr. Patterson completed quarterly groundwater sampling events at the Warrenton Training Center utilizing low-flow sampling techniques. Mr. Patterson also coordinated with off-site homeowners to conduct monthly groundwater sampling events of residential wells.

Reliance Treated Wood, Phase II Subsurface Investigation, Federalsburg, Maryland, Environmental Scientist, 2006: As the Field manager for Phase II groundwater and soil investigations Mr. Patterson managed the installation of several shallow pre-packed environmental sampling wells. Additionally, Mr. Patterson completed low flow groundwater sampling program including surface water samples and completed soil a sampling program with a subcontractor utilizing a geoprobe.

Rotorex Corporation, Phase II Investigation, Walkersville, Maryland, Environmental Scientist, 2006: As an Environmental Scientist for the Phase II site investigation, Mr. Patterson completed a low flow groundwater investigation, managed a direct-push soil sampling program, and conducted an indoor air sampling program.

General Electric, Brownfield Site Assessment and Voluntary Cleanup Program, Baltimore MD, Environmental Scientist, 2005-2006: This project involved a Post-Remediation Phase II Site Assessment and follow-up investigations both on- and off-site to evaluate and manage in-place contaminants. Field activities included contaminant delineation using a Membrane Interface Probe (MIP), soil sampling using direct-push sampling techniques and low-flow groundwater sampling.

State Highway Administration, District 2 Environmental Manager (SHA In-house consultant), Baltimore MD, 2003-2004: As the Environmental Manager for MD SHA District 2, Mr. Patterson completed NEPA documentation and coordinated NEPA compliance for minor roadway and bridge preservation projects, some requiring Programmatic 4(f) Evaluations. Mr. Patterson coordinated project impacts to state and local jurisdictions to obtain required project permits.

MD State Highway Administration, I-95/Contee Road Transportation Improvement Study, Laurel, MD, Environmental Scientist, 2003-2005: Mr. Patterson served as an Environmental Scientist/Task manager for the I-95/Contee road Transportation Improvement Study. The project involved using GPS and GIS to map field identified natural resources, completing the Secondary and Cumulative Effects Analysis (SCEA) for inclusion into the Environmental Assessment (EA), and determining specific impacts to natural resources. Mr. Patterson coordinated these impacts with federal and state regulatory agencies.

Maryland Transportation Authority, Wetland Delineation at BWI Airport, Hanover MD, Environmental Scientist, 2004: Environmental Scientist/Task Manager for the delineation of wetlands on a 100-acre parcel adjacent to the BWI Airport near Baltimore Maryland.in support of a major runway expansion. Mr. Patterson organized and participated in field activities to identify and delineate all wetlands, Waters of the US, and rare, threatened or endangered species within a 100 acre parcel adjacent to the BWI airport. Tasks included completing the mapping of the field identified

resources using GPS and GIS software and completing the Wetland Delineation Report.

Chronology

April 2003 - August 2005: A.D. Marble & Company, Owings Mills, MD

August 2005 - November 2014: URS Corporation, Germantown, MD

November 2014 - Present: AECOM Technical Services, Inc., Germantown, MD

LOCATION MAP - PARCEL 004

619 E. PINNER ST, SUFFOLK, VA

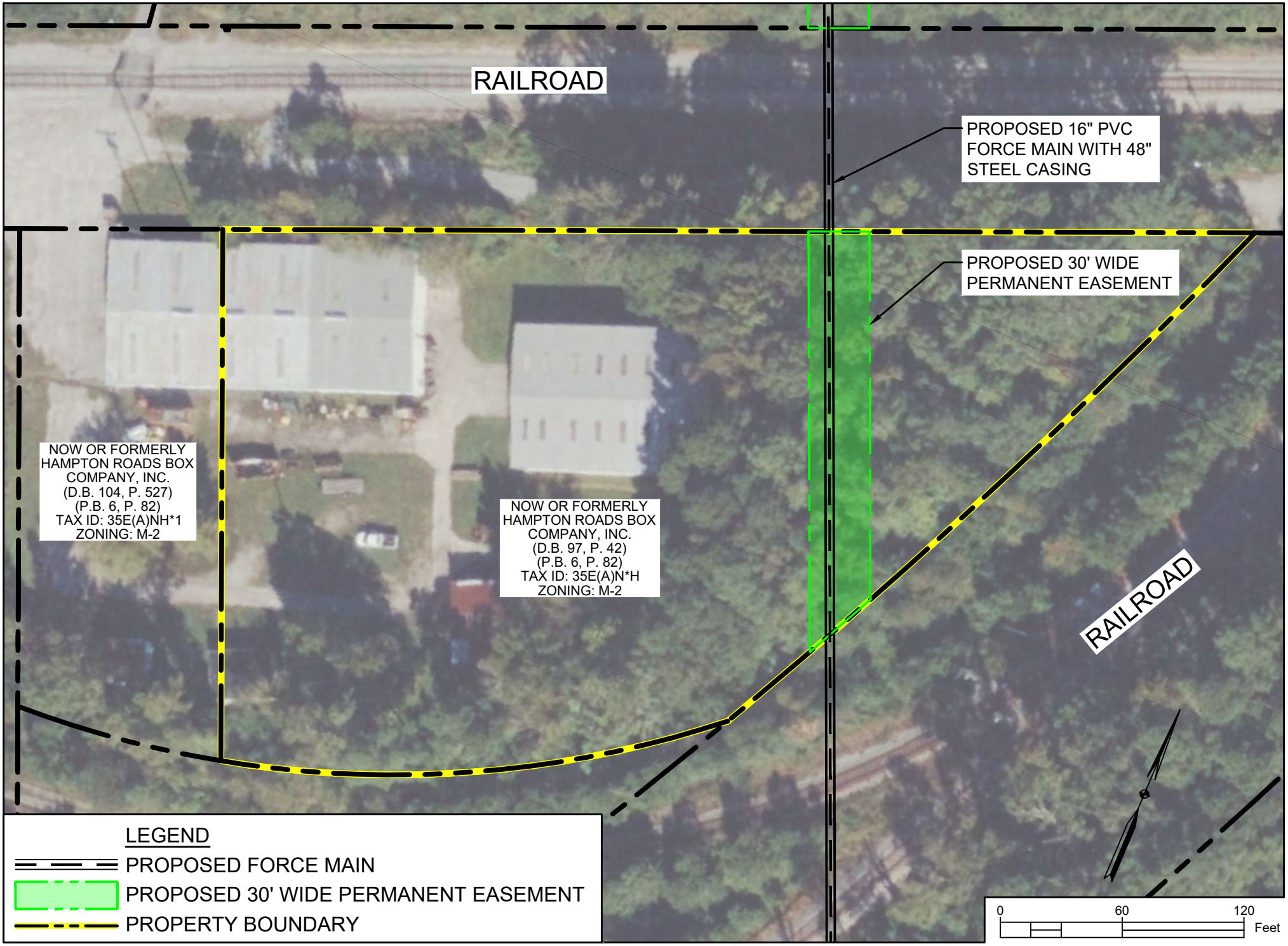

Section 10 - Flood Elevation Requirements

A. Introduction - Localities in Hampton Roads have adopted flood elevation freeboard design criteria that exceed FEMA flood elevations. The required freeboard affects finished floor elevation in these localities, including those on HRSD projects. To comply with the Locality requirements and to consider Sea Level Rise, this standard will cover the process to determine the climate change protection level for HRSD projects.

B. Definitions
- Freeboard - the calculated difference between the finished floor elevation and the FEMA Base Flood Elevation for the 100-year storm
- BFE - Base Flood Elevation
- EWL (100yr) - Extreme Water Level for the 100-year storm event

Flood Zone definitions can be found on the FEMA website, https://www.fema.gov under "Flood Zones"

C. Locality Code Requirements
The freeboard and finished floor elevation requirements should be verified with the locality in question for each project when initiated. Localized drainage conditions should also be considered for each project when setting the elevation for new buildings or structures.

The following example is for freeboard construction requirement in the City of Hampton at the HRSD Bridge St. PS Location. Note that it may not represent the current construction standards for the example Locality.

Hampton Freeboard, Zone AE: FEMA Base Flood + 3'

D. Asset Protection Requirements
Any new structure shall be constructed in a resilient manner with the ability to add mitigation measures at an appropriate future date. For facilities that need a maximum protection level of 4-feet above the finished floor, building walls can be constructed from reinforced CMU. For structures that require protection levels beyond the 4-feet, building walls should be constructed from reinforced concrete.

E. All new facilities shall build the first floor in accordance with the Locality Freeboard requirements. Additional construction measures shall be in accordance with Section D. of this standard. Please contact Engineering Planning and Analysis Division for additional information on the flood elevations by sending in a request to the **ModelingRequest@hrsd.com** email with a project description and location map.

End of Section

Section 11 - Public Communication Program

PLEASE NOTE: The Public Information Specialist does not utilize Unifier. If PR-related information is required to be entered into Unifier, please also email the information to the Public Information Specialist. When using any HRSD letterhead documents, ***ensure you have the most up-to-date Commission letterhead****. If mailing any documents, use the main office's address on envelopes.*

HRSD's Public Communication Program is intended to develop public awareness of planned projects and define the roles of project partners in engaging the community. This program includes standards; however, parts of this program may not be implemented if the HRSD Communication Department's staff determines a project will have minor public impact.

The following forms/formats shall be used in the administration of the project. The Project Manager (PM) and FIRM will provide a detailed project briefing to HRSD's Director of Communications and HRSD's Public Information Specialist and, utilizing the aide of the Public Communication Program Checklist, will determine the extent of the program's implementation and customize the forms/formats for each project. The FIRM may be requested to assist with additional documentation or public outreach needs deemed appropriate for a project or locality.

- Attachment A: Public Participation Program Checklist. Please complete the first section in grey prior to meeting with the Public Information Specialist.

1. **Engage with Locality Staff** - HRSD representatives (staff and/or FIRM) shall meet with representatives of the locality in which a project will occur to discuss the project and the method of delivery. The PM shall ensure appropriate information is forwarded to and received from a single point of contact throughout the project's life. This individual will be known as our locality partner (LP) or their designee. The FIRM shall attend these meetings throughout the design and/or construction phases.

2. **Alert Public Officials** – HRSD's PM or their designee will be responsible for ensuring project information is provided to our assigned LP. The FIRM may be requested to provide additional information and or respond by phone or in person for this effort throughout the design and construction phases.

3. **Identify Project Stakeholders** – The FIRM shall identify and compile a list of all parties or entities that may be affected by construction activities located along the project route requiring outreach/coordination during the project. This list shall include but is not limited to: civic leagues, residents, businesses, schools, school bus routes, churches, trash collection, road detours/closures, and mass transportation routes. The list shall contain the following: contact information, full address (physical and mailing, if different), phone, impact, and operating hours. This initial list shall be provided to the Public Information Specialist during the first design submittal (e.g. 30% design) for review and comment. The FIRM shall then log this list into HRSD's Unifier Enterprise Project Management System - Stakeholders List located under Reports.

   - Attachment B: Stakeholder List - Template

4. **Participate in Public Open House/Community Meetings** – In a cooperative effort, HRSD will

assist each locality in fulfilling their public participation guidelines. If an informational public meeting is required by a locality, HRSD will request the locality to establish a date and time and secure a location for the meeting. Utilizing the advertisement submission schedule, ensure the specific advertisement deadlines outlined in the submission schedule will be met allowing time for public response. HRSD's Public Information Specialist or the Director of Communications, in the Specialist's absence, will advertise a Willingness to Hold an Informational Public Meeting (Open House) for a project when a locality requests it. If an additional notification is to be mailed, at the request of the locality, the expectation will be that the locality will print and mail the project notice provided by HRSD to the addresses identified by the locality and in the locality's records (as resident and property owner, if different). HRSD's staff and the FIRM will attend and present the project information in an Open House format. If needed, HRSD representatives (staff and/or FIRM) will also meet with civic leagues or business associations at their request to discuss the project.

- Attachment C: Willingness to Hold
- Attachment D: Informational Open House Advertisement sample
- Attachment E: Open House Notice to the Public – Template*
- Attachment F: Open House Requirements
- Attachment G: Open House Sign-In Sheet
- Attachment H: Open House Comment Card
- Attachment I: Advertisement Submission Schedule
- Project Display Board – see Public Information Specialist for sample boards

5. **Virtual Presentation for Open House** – The virtual presentation will be used in addition to an in-person Open House to allow the public to view the information and provide feedback if they cannot attend the in-person Open House. Please refer to Open House Requirements (Attachment F) for virtual presentation requirements.

   - Attachment J: Virtual Presentation Example

6. **Establish a Project Website** – HRSD will establish a page on its website for each project of specific public interest or impact. The FIRM shall be responsible for compiling the information needed using the HRSD provided templates. The information provided shall include an overview, schedule, the project team, contact information, a list of roads affected and separately, a list of project-specific frequently asked questions and a project map. HRSD's Public Information Specialist and PM will review the information before it is uploaded to the website. The FIRM shall submit these documents to the Public Information Specialist, the month prior to, and no later than the month of, the project being taken to the HRSD Commission for approval.

   - Attachment K: New Project Webpage – Template
   - Attachment L: New Project FAQs – Template
   - Attachment M: New Project Map - Template
   - Attachment N: Alternate Neighborhood Overview Map - Template

7. **Website Updates –** Updates to the project webpage are expected at the end of each month once staging/construction has begun. In the last week or two of each month (depending on holidays), expect an email from the Public Information Specialist. An email will be sent to each Project Manager that has projects that are currently on the website, along with the project schedule and most recent update that the PM can edit/update. The PM can then reply to the email with the

updates to those projects for that month to include any updated project maps.

8. **Stakeholder Updates** – The website is now equipped with a button allowing stakeholders to sign up to receive notifications when a project webpage is updated. Once the project page is added to the website, the FIRM shall send an email to the stakeholders notifying them of how to sign up to receive project update notifications. This activity should occur within two business days of being notified by HRSD staff that the project has been placed on the website. The FIRM shall log these email notifications using HRSD's Unifier Enterprise Project Management System – PR Notifications located under Reports.

   - Attachment O: Stakeholders Notification Update

9. **Distribute Project Introductory Notice to Neighbors** – HRSD's Public Information Specialist, PM, and FIRM will work collectively to draft project notices to be distributed to businesses and residences affected by a project. The FIRM is responsible for the distribution of the HRSD Communication Department's approved notice by the FIRM's staff a month prior to staging or any construction activities. Work shall not be permitted to begin until these notifications have been distributed a minimum of thirty (30) calendar days in advance. The FIRM shall log this distribution into HRSD's Unifier Enterprise Project Management System - PR Notifications located under Reports.

   - Attachment P: Project Introductory Notice to Neighbors – Template*

10. **Post Project Signs (If Applicable)** – When working on City assets and when required by the locality, standard signs shall be placed at strategic locations in a neighborhood to notify the public that an HRSD project is underway and provide contact information. The Public Information Specialist will approve the sign display order, and the contractor shall place the order, pick up, pay for, and install the signage at the site(s) as defined by the Public Information Specialist or the locality prior to the start of construction.

    - Attachment Q: Project Sign-Sample
    - Attachment R: HRSD Standard Signage-Sample
    - Attachment S: HRSD Sign & Base Specifications

11. **Construction Update Notices** – notices are developed by the FIRM, utilizing HRSD's approved templates, and provided to the Communications Department for review fourteen days prior to any work commencing in the affected area. The FIRM shall ensure the distribution of notices to all affected residences and businesses, by the contractor, seven days prior to any work occurring in the affected work area. Work shall not be permitted to begin until these notices have been distributed, confirmed by HRSD, and the FIRM has logged the notice into HRSD's Unifier Enterprise Project Management System – PR Notifications located under Reports. Coordination of this effort will take place with the Public Information Specialist and requires HRSD Communication Department approval and, if requested, an additional five (5) business days to prepare notices.

    - Attachment T: Construction Update Notices – Template

12. **Additional Notices** – Notices advising affected properties of disruptive activities shall be distributed seven (7) days before the work begins by the FIRM. Additional notice may be required 24 hours prior, the morning of work, and once completed as directed by HRSD. The

FIRM shall be responsible for drafting the notices, utilizing HRSD's approved templates, and providing to the Communications Department for review fourteen days prior to the work beginning.

The contractor will be responsible for distribution of the notices to the public. The FIRM shall ensure work will not begin until these notices have been distributed, confirmed by HRSD, and logged into HRSD's Unifier Enterprise Project Management System – PR Notifications located under Reports. Coordination of this effort shall take place with the Public Information Specialist.

- Attachment U: CCTV Inspection Notice *
- Attachment V: CCTV Notice with Cleaning and Inspection *
- Attachment W: Smoke Testing Notice
- Attachment X: Smoke Testing Notice-Door Card Hanger
- Attachment Y: Survey Notice *
- Attachment Z: Survey Notices – Mailing and Tracking Log
- Attachment AA: Lateral Work Notice *
- Attachment BB: Reminder Notice to Neighbors-Day Before Work: cleaning, inspection, lateral, etc.
- Attachment CC: Completed Work Notice to Neighbors-Work Adjacent to Home: cleaning, inspection, lateral, etc.
- Attachment DD: Geotechnical Borings Notice-Example *
- Attachment EE: Unplanned Power Interruption Notice
- Attachment FF: Unplanned Water/Sewer Service Interruption Notice
- Attachment GG: Project Closeout Notice

13. **Post Variable Message Boards (VMB)** – VMB's shall be utilized in areas with high traffic counts, main thoroughfares, and cut-throughs or when deemed necessary to reach a larger audience. The VMBs shall be set up one-to-two weeks in advance of any work and located in a manner to advise affected traffic in all directions. In most cases, an accepted three-screen message would detail: [1] the type of work to begin (road work, utility work, overnight work, milling and paving), [2] the expected date range of the work, and [3] additional information if identified (flaggers, lane shift, lane closed). The use of, timing, and messaging of VMBs will be coordinated with the Public Information Specialist and PM.

14. **Traffic Advisories/Media Releases** – HRSD's Director of Communications or the Public Information Specialist, in the Director's absence, will draft media releases and traffic advisories when needed. These will be coordinated with and forwarded to the locality's media contact or designee for their internal distribution and use. Traffic advisories need to be distributed 24 hours ahead of any detours occurring. Please ensure the Public Information Specialist has the date range of the detour as well as the approved traffic control map to aid in the creation of the traffic advisory. Allow up to a week of time for creation and review of the advisory prior to distribution. If the planned detours are delayed, the PM or FIRM must inform the Communications Department of any date changes ahead of the advisory distribution.

    - Attachment HH: Media Release – Traffic Advisory Example

15. **Response to Public and Media Inquiries** – All media inquiries received shall be directed to contact HRSD's Director of Communications or Public Information Specialist, in the Director's absence. The FIRM shall address any public inquiry with courtesy and then forward to the Public Information Specialist for additional assistance, if needed. HRSD and the FIRM will strive for

same-day response during business hours and to reply no later than the next business day to after-hours inquiries. The FIRM will be requested to provide information and/or respond to the inquiring party and to track and log these inquires using HRSD's Unifier Enterprise Project Management System – Citizen Inquiry Log located under Reports. The FIRM shall verify that all inquiries or concerns have been resolved, recorded, and marked as closed in Unifier Enterprise Project Management System before closing out the project. Media guidance will be provided to the project team by the Director of Communications at the beginning of each project or as requested from the project team. HRSD wallet size media/project inquiry cards will be provided for field staff to carry and provide to the media or any public inquiry beyond their expertise or, are uncomfortable responding to.

- Attachment II: Media Card Example (Media/ Project Inquiries)

16. **Social Media Mini Updates** may be requested throughout a project during sensitive and highly visible work or once reaching large milestones or completion. Coordinate with the Public Information Specialist and HRSD's PM for the need for these updates. When requested by HRSD, these updates shall consist of several photos of the relevant work at the job site, corresponding captions, and a brief (100 words or less), non-technical, simplified explanation of the activity taking place within the photos. This is a non-technical update intended for the general public to keep them informed of the project and shall be worded so the activity can easily be understood by the public.

P.O. BOX 5911, VIRGINIA BEACH, VIRGINIA 23471-0911 · (757) 460-7000 · FAX (757) 363-7917
www.hrsd.com

Public Participation Program - Project Manager Checklist

Project Name: _____

Project Manager: _____

Design Engineer: _____

Submitted to Engineering: Name: _____ Date: _____

email Phone:

Use of Checklist: This document is intended as an aide or "a trigger" to assist the project team to prepare and fulfill HRSD's Public Participation Program. It is not intended to replace any portion of the full Standards Section

Project Brief:

× not needed
√ required

Engage Locality Staff

Complete these items prior to meeting with HRSD Public Information Specialist			Completed
		Obtain guidance from your Locality Partner for the following:	
		Identify localities single contact person and their contact information	
		Determine if Project Signs are required	
		Determine if City Council/ Board of Supervisor Briefing is required (in person or written briefing)	
		Determine if an Open House is required - ask for City assistance with location and mailing list	
		Determine if VMBs (Variable Message Boards) will be required	
		Determine if there are Civic Leagues, residents, or businesses we should be aware of/ address early	
		Determine City's additional PR requirements for this project (copy of notices, mailing lists)	

Notes:

Identify Project Stakeholders

			Completed
		Stakeholder List - prepare and submit to Real Estate Manager and PM	
		Plan for Stakeholder Engagement	

Notes:

Coordination with Project Team

			Completed
		Set meeting, if needed, to review expectations during project	

Notes:

Public Open House/Community Meetings

			Completed
		Willingness to Hold	
		Public Meeting Advertisement	
		Open House Notice to the Public (mailed or door hung - does locality require copies)	
		Public Meeting Prep/ Review	
		Determine/ Identify if a meeting with large stakeholders are necessary	
		Determine/ Identify other one-on-one meetings necessary	
		Schedule meetings with large stakeholders	
		Schedule other/additional Community or Business Leagues	

Notes:

Project Notices & Updates

			Completed
		30 day Project Introduction Notice to all affected by the project	
		7 day Construction Notice	
		Additional Specialty Notices	
		Survey Notices	
		CCTV Notice	
		CCTV inspection and cleaning	
		Reminder Notices	
		Project Closeout Notice	
		Stakeholder Email with project page and subscription info	

Notes:

Project Website

			Completed
		Website Required -Review timeline	
		Initial Project Upload Documents received by HRSD / uploaded to website	
		Review Monthly Update Process with Public Information Specialist	

Notes:

Media Guidance / Prep (high profile projects)

			Completed
		Does the HRSD Project Manager request this service	
		Review HRSD's accepted procedures with consultant, inspector, contractor	

Notes:

Project Closeout Checklist

			Completed
		Project Signs have been picked up and returned to HRSD - Public Information Specialist	
		Customer Inquiry Log has been finalized and closed out in Unifier	
		Project Closeout Notices have been sent to residents and businesses	
		Project Website has been updated to reflect a completed project and the approved HRSD thank you notice before marking the project as closed	

Notes:

P.O. BOX 5911, VIRGINIA BEACH, VIRGINIA 23471-0911 · (757) 460-7000 · FAX (757) 363-7917
www.hrsd.com

STAKEHOLDER LIST

Project Name:
Project Manager:
Design Engineer:
Submitted to Engineering: Name: Date:
email Phone:

Note:

NEIGHBORHOODS (TO INCLUDE CIVIC LEAGUES)

Stakeholder	Address	City	State	Zip Code	Contact Name	Contact Number	Best Contact Hours	Affect to Stakeholder
Diamond Springs/Garden Wood Park Neighborhood	5652 Haden Road	Virginia Beach	Virginia	23455	Sue Cipriani	(757) 589-0467	N/A	Access Disrupted and/or Detoured
Driftwood Apartments	1634 Diamond Springs Rd	Virginia Beach	Virginia	23455	Dorothy Roberts	(757) 460-0519	9 AM - 5PM	Access Disrupted and/or Detoured
Crescent Square	1333 Diamond Springs Rd	Virginia Beach	Virginia	23455	Unknown	(757) 578-1776	Unknown	Within Construction/ Traffic Control Limits

GOVERNMENT / JURISDICTIONAL ENTITIES

Stakeholder	Address	City	Virginia	Zip Code	Contact Name	Contact Number	Operating Hours	Affect to Stakeholder
Joint Expeditionary Base Little Creek - Fort Story	2600 Tarawa Ct #100	Norfolk	Virginia	23518	Scott Mohr	757-462-8425	24 Hours	Traffic
City of Virginia Beach	2405 Courthouse Drive, Bldg. 2, 2nd Floor	Virginia Beach	Virginia	23456	Erica Roberts	(757) 385-8652	24 Hours	Pump and Haul Operations/Traffic

BUSINESSES

Stakeholder	Address	City		Zip Code	Contact Name	Contact Number	Operating Hours	Affect to Stakeholder
Mobile One Courier	1619 Diamond Springs Rd Suite C	Virginia Beach	Virginia	23455	Unknown	(757) 622-9500	24 Hours	Adjacent to Abandonment Activities
Care-A-Lot Pet Supply	1924 Diamond Springs Rd	Virginia Beach	Virginia	23455	Denise Clarke	(757) 457-9431	8AM - 9PM	Access Disrupted and/or Detoured
7-Eleven	1900 Diamond Springs Rd	Virginia Beach	Virginia	23455	Unknown	(757) 460-4751	24 Hours	Access Disrupted and/or Detoured
Red Carpet Inn	1808 Diamond Springs Rd	Virginia Beach	Virginia	23455	Jay Patel	(757) 460-3471	24 Hours	Access Disrupted and/or Detoured
NGK-Locke Polymer Insulators	1609 Diamond Springs Rd	Virginia Beach	Virginia	23455	Dennis Morgan	(757) 460-3649	Unknown	Access Disrupted and/or Detoured
Diamond Springs Citgo	1560 Diamond Springs Rd	Virginia Beach	Virginia	23455	Unknown	(757) 464-0596	6AM - 12AM	Access Disrupted and/or Detoured
Fire Services Inc	5652 Bayside Rd	Virginia Beach	Virginia	23455	Ed Anderson	(757) 464-9488	8AM - 4:30PM	Access Disrupted and/or Detoured
Complete Automotive Inc	1493 Diamond Springs Rd Suite 100	Virginia Beach	Virginia	23455	Richard Kelly Jr	(757) 460-2277	7:30AM - 6PM	Access Disrupted and/or Detoured
Public Storage	1409 Diamond Springs Rd	Virginia Beach	Virginia	23455	Unknown	(757) 544-9404	9:30AM - 6PM	Adjacent to Construction/ Traffic Control Limits
Dominion Interior Supply	5721 Bayside Rd	Virginia Beach	Virginia	23455	Ross W Kent	(757)-363-2858	7AM - 5PM	Access Disrupted and/or Detoured
Filtrex USA	5721 Bayside Rd # B	Virginia Beach	Virginia	23455	Pracash Talreja	(757) 318-7800	Unknown	Access Disrupted and/or Detoured
CrossFit Rife	5741 Bayside Road Suite #101	Virginia Beach	Virginia	23455	Unknown	(757) 390-3373	6AM - 7PM	Access Disrupted and/or Detoured
Arai Americas	5878 Bayside Rd	Virginia Beach	Virginia	23455	Marge Crittendon	(757) 363-8101	8AM - 5PM	Access Disrupted and/or Detoured
Aetna Insulated Wire	1537 Air Rail Avenue	Virginia Beach	Virginia	23455	Unknown	N/A	Business Closed	Access Disrupted and/or Detoured
Dynaric Equipment Division	5740 Bayside Rd	Virginia Beach	Virginia	23455	Unknown	(757) 363-0671	Unknown	Access Disrupted and/or Detoured
Sunbelt Supply	5733 Bayside Rd # 107	Virginia Beach	Virginia	23455	Julie Scaff	(757) 318-9108	Unknown	Access Disrupted and/or Detoured
Daltile Tile and Stone Showroom	5770 Thurston Ave Ste 102	Virginia Beach	Virginia	23455	Unknown	(757) 460-2900	7AM - 5AM	Access Disrupted and/or Detoured
Rexel	1457 Miller Store Rd #101	Virginia Beach	Virginia	23455	Unknown	(757) 855-3031	7AM - 5PM	Access Disrupted and/or Detoured
Magnuson Hotel	5708 Northampton Blvd	Virginia Beach	Virginia	23455	Nataliya Greaud	(757) 460-2205	24 Hours	Within Construction/ Traffic Control Limits
North American Bulk Transport	1321 Diamond Springs Rd	Virginia Beach	Virginia	23455	Unknown	(757) 460-7923	24 Hours	Within Construction/ Traffic Control Limits

Meineke Car Care Center	1321 Diamond Springs Rd	Virginia Beach	Virginia	23455	Unknown	757) 687-0566	7:30AM - 6PM	Within Construction/ Traffic Control Limits
Geese Logistics	1345 Diamond Springs Rd #101	Virginia Beach	Virginia	23455	Henry E Giese Iii	(757) 491-8400	8AM - 5:30PM	Within Construction/ Traffic Control Limits
Forward Air	1345 Diamond Springs Rd	Virginia Beach	Virginia	23455	Bill Frank	(757) 857-9783	Unknown	Adjacent to Construction/ Traffic Control Limits
AIN Plastics	1347 Diamond Springs Rd Suite 101	Virginia Beach	Virginia	23455	Unknown	(757) 363-3691	Unknown	Adjacent to Construction/ Traffic Control Limits
Breakthru Beverage Virginia	1347 Diamond Springs Rd Ste 200	Virginia Beach	Virginia	23455	Unknown	(757) 424-6300	Unknown	Adjacent to Construction/ Traffic Control Limits
Glass Baron Inc	1601 Diamond Springs Rd	Virginia Beach	Virginia	23455	Ivan Morris	(757) 464-1131	8AM - 5PM	Access Disrupted and/or Detoured

SCHOOLS

Stakeholder	Address	City		Zip Code	Contact Name	Contact Number	Operating Hours	Affect to Stakeholder
Bayside Elementary School	5649 Bayside Rd	Virginia Beach	Virginia	23455	Catherine Brumm	757-648-2080	7:30 AM - 4 PM	Access Disrupted and/or Detoured

CHURCHES

Stakeholder	Address	City		Zip Code	Contact Name	Contact Number	Operating Hours	Affect to Stakeholder
Chalice Christian Church	5612 Haden Rd	Virginia Beach	Virginia	23455	Rev. Gregory Ott	(757) 464-5650	Includes Evening and Weekend Hours	Access Disrupted and/or Detoured
Church of Christ Southside	5652 Haden Rd	Virginia Beach	Virginia	23455	Unknown	(757) 464-4574	Includes Evening and Weekend Hours	Access Disrupted and/or Detoured
Diamond Springs Baptist Church	5644 Bayside Road	Virginia Beach	Virginia	23455	Kelly Darnell	(757) 460-0761	Includes Evening and Weekend Hours	Access Disrupted and/or Detoured

SCHOOL BUS, TRASH COLLECTION, AND MASS TRANSPORTATION ROUTES

*No HRT bus routes down Diamond Springs Road

*School bus and trash collection not likely to be impacted due to work hour restrictions of night and weekend

Courthouse Pressure Reducing Station Project

Willingness to Hold a Public Open House

Project Overview: HRSD, your regional wastewater treatment utility, is planning to install a Pressure Reducing Station (PRS) at 2532 Nimmo Parkway. The facility, which will be across from the City of Virginia Beach Building Maintenance Facility (Building No. 9 in the City Municipal Center), will be designed to coordinate with the area's architecture and screened from the view of Courthouse Marketplace by existing vegetation. Construction will have minimal impact on traffic, and our contractor will be required to maintain a clean worksite.

Need, Design and Schedule: The project is needed to maintain appropriate pressures in the sanitary sewer pipeline during wet weather and dry weather conditions and to ensure that the system has the capacity required to convey future wastewater flows. The plans call for the installation of pipe, valves and pumps along with a small structure to house electrical equipment and various appurtenances to function as a PRS. Attractive fencing and new landscaping will enhance the appearance. We expect to advertise for bids in August and award the contract in September 2013. Construction is expected to take nine months.

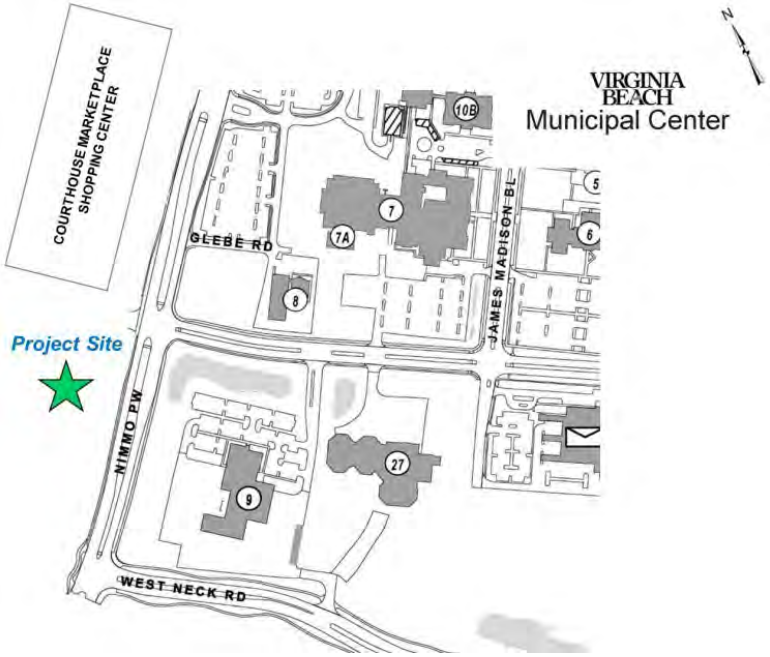

If you have concerns or comments about the project, want to review the plans, or desire for us to hold an informational public open house, please call the HRSD Public Informational Specialist at (phone number for corresponding PIS) or send an email to projects@hrsd.com

You also may visit www.hrsd.com/construction-status for additional information and project updates.

HRSD

Ensuring future generations inherit clean waterways

Downtown Norfolk Sanitary Sewer Pipeline Replacement Project

INVITATION TO AN INFORMATIONAL OPEN HOUSE

HRSD invites you to attend an Open House to learn about the project to install approximately 6,000 linear feet of sanitary sewer pipe and valves in downtown Norfolk. This effort to replace a pipeline constructed in the 1940s is required to minimize the risk of pipe failures. Construction will take place along Plume Street, Atlantic Street, Main Street, Market Street, Waterside Drive, City Hall Avenue, and Saint Paul's Boulevard. Construction typically will be limited to sections of 300 linear feet, and comprehensive traffic control plans will be implemented to minimize inconvenience.

COME TO THE OPEN HOUSE AND:

- Meet representatives of HRSD and our engineering consultant
- See the proposed design for the project
- Ask questions

DATE: Wednesday, February 14, 2023
TIME: Come at your convenience anytime between 5 p.m. and 7 p.m.
PLACE: Slover Library Community Engagement Room 650
235 E. Plume Street• Norfolk, VA 23510

If you have questions about the Open House or comments about the project, please call the Public Information Specialist at {phone number for corresponding Public Information Specialist} or send an email to projects@hrsd.com. You also may visit www.hrsd.com/construction-status to learn more about the project and for updates after construction begins.

August 24, 2021

Dear Neighbors:

In coordination with York County, HRSD, your regional wastewater treatment utility, invites you to attend an Open House to learn about the Tabb Pressure Reducing Station & Offline Storage Facility. HRSD is undertaking a project to construct the Tabb Pressure Reducing Pump Station & Offline Storage Facility, which will include constructing two 2.5-million-gallon offline storage tanks and a pressure reducing pump station. The new facility will be located on HRSD property located at 900 Yorktown Road in Yorktown and is designed to relieve pressures to the sewer system during wet weather events and provide flow balancing for HRSD's James River and York River Treatment Plants. The facility will improve system operations, increase flow capacity, and provide reliable sanitary sewer infrastructure for your community and the region. Additionally, these system improvements are mandated by the EPA to reduce sanitary sewer overflows.

Representatives of HRSD will be available during the Open House to explain the project and respond to questions. *Frequently Asked Questions* on the back of this page provide more information about the project.

Project Open House
Date: Thursday, September 9, 2021
Time: Come at your convenience
between 5:00 p.m. – 7:00 p.m.
Place: Tabb High School Lobby
4431 Bethel Road
Yorktown, VA 23693

Come to the Open House at your convenience and:

- Discuss the project with the project team
- See the project site possibilities and what the facility may look like
- Ask questions

If you cannot attend the Open House, a pre-recorded video is available to view that includes slides, pictures, and narration with explanations from the project manager. You can view the video and submit questions at the following link: www.

Anticipated Project Schedule

Design Completion: Summer 2022

Construction: Fall 2022 - Spring 2024

If you are unable to attend this open house and would like to obtain more information, please contact:

Lisa Bolen, HRSD Public Information Specialist
Phone: 757.460.7000
Email: projects@hrsd.com

Commissioners: Stephen C. Rodriguez, Chair • Frederick N. Elofson, CPA, Vice-Chair • Vishnu K. Lakdawala, PhD
Michael E. Glenn • Willie Levenston, Jr. • Elizabeth A. Taraski, PhD • Nancy J. Stern • Ann W. Templeman
www.hrsd.com

Frequently Asked Questions

What is the Tabb Pressure Reducing Station and Offline Storage Facility Project?

A. The Tabb Pressure Reducing Station and Offline Storage Facility will construct two 2.5-million-gallon offline storage tanks and a pressure reducing pump station. The facility is designed to relieve pressures to the sanitary sewer system during wet weather events and provide flow balancing for HRSD's James River and York River Treatment Plants. The flow balancing is necessary to support the process needs of the Sustainable Water Initiative for Tomorrow (SWIFT) facility. For more information about SWIFT, please visit swiftva.com.

Why is a storage tank needed in this area, and what exactly is a storage tank?

A. During wet weather events, the above-ground storage tanks will temporarily hold the wastewater and rain/groundwater to relieve pressures to the sewer system. HRSD needs storage tanks in this area of York County to meet regulatory requirements. This location within HRSD's sewer system offers significant benefits to York County and the region due to its universal (unmatched) connectivity within the HRSD pipe network. There is no other location within the HRSD system that allows for such a facility to manage system-wide flows from one singular location.

Will this prevent street flooding during hurricanes or other high rain events?

A. No. While the offline storage facility is being designed and built to handle increased flow during routine wet weather events, its primary role is not intended to collect or treat stormwater. The tanks are not sized to prevent all sanitary sewer overflows (SSOs) when named storm events (tropical depressions, tropical storms, hurricanes, etc.) or lengthy nor'easters occur. HRSD's sanitary sewer treatment system operates separately from York County's stormwater collection and treatment system.

How safe is this? What safeguards does HRSD put in place to ensure safety?

A. The proposed facility is very safe, with over 10,000 similar tanks constructed over the last 70 years. The tanks will be monitored and controlled remotely to observe levels within it and to make sure that they are functioning as designed. HRSD will perform routine internal inspections of the tanks to verify their condition, and maintenance will be scheduled based upon these inspections.

Will this storage tanks create odor issues for the surrounding community? What will do you plan to do to minimize or eliminate odor?

A. The storage tanks will not create odor issues. HRSD will install an odor collection and abatement system to treat the air in the tanks. Similar technologies have been proven effective with other HRSD pump stations, wastewater treatment plants, and other odor related facilities.

Will the construction disrupt traffic in the area or create excessive noise?

A. HRSD, the design team, and the selected contractor will be coordinating closely with York County to minimize impacts on traffic and pedestrians in areas near construction. County noise ordinances will be followed by identifying and dampening excessive noise-generating activities as well as vibration from equipment during construction activities.

What are the general working hours for the project?

A. Work will typically take place Monday through Friday during daylight hours (8 a.m. - 5 p.m.). However, there may be times when extended hours, work at night, or weekend work may be necessary.

Will there be any interruptions to my water or sewer service?

A. Your water service should not be affected by this project.

Will material and equipment be stored on-site?

A. Equipment and materials for this project will be stored on the project site within HRSD property boundaries and should not require any additional offsite storage.

Where will construction workers park?

A. Construction workers will park on the project site within HRSD property boundaries. Construction personnel will not be allowed to park their personal vehicles on the public streets.

What is the cost of the project?

A. The estimated cost for the project is approximately $22 million and is financed by the wastewater treatment fees paid by HRSD customers.

How can I receive regular project updates?

A. Regular project updates are posted on the HRSD website at www.hrsd.com/construction-status. You may also sign up at www.hrsd.com/subscriptions to receive an email notification whenever the website has an update about the project.

Requirements for:
Informational Open House or Community Meeting for HRSD projects.

Coordination needed:

- Facility and time of event – work with the locality partner
- Tables / chairs
- Invite / inform the assigned locality partner or relevant department contact(s)
    - HRSD Project Manager will give the name and title of each to the Public Information Specialist
- Who will / should attend
    - HRSD –
    - Consultant –
    - Locality Partner -
- Business cards – each individual shall bring their own

Consultant Team shall provide:

- Project boards & meeting announcement (number and type TBD, portrait or landscape, overall project and segments as needed) – as determined in the prep meeting
- Easels (quantity to match the number of boards and a spare)
- 1-2 set(s) of full size 100% Plans
- Traffic Plans, full size set (if applicable)
- Printed Project Flyers or handouts – as provided by HRSD
- Name Badges for all project team attendees - displaying Name, Position / Title (Design Engineer / Inspector) for this project and company logo centered at the top as shown:

- Animation and laptop to run animation from (if applicable)
- All graphics and video(s) provided to HRSD for handouts and website upload prior to event

HRSD shall provide:

- Sign-in sheet
- Comment Sheets
- Pens
- Give Away Items
- Website Project Page
- Directional Signage
- Project type Fact Sheets (CIPP, BYPASS, Trenchless) as needed

Additional project specific items needed prior to Open House:

- **Open House notice:** Once the location, date, and time are known, a notice needs to be created and distributed (See Attachment E in Section 11 of the standards).
    - **Addresses**: Along with the notice, addresses will be needed for the stakeholders and nearby residents that a notice can be mailed to. We can also share this notice with the City/County so they can share it. Time will be needed to get these printed, labeled, and mailed so keep that in mind for timing. 10-14 days prior to the open house is a good timeframe to get them mailed out.

- **Script for Virtual Presentation and PowerPoint**: For the virtual presentation that will be available on the project page, creating a script of the voiceover for the power point presentation is easier for editing. Once the script/PowerPoint has been reviewed and approved, the voiceover can be added to the Power Point presentation.
    - **Virtual Presentation**: Once the PIS has the voiceover PP presentation, it will be sent to IT to add it to the project webpage to make the virtual presentation. Those who cannot attend in-person can view the presentation either as slides or as a video and can submit comments and questions through the webpage.
        - An example of how the virtual presentation looks on the project page (the video is on the last slide) is here: https://www.hrsd.com/SouthNorfolk_VirtualOpenHouse#

        - Good information to include is why the project is necessary, what type of work is involved, the project/construction schedule, how the residents/town may be impacted, where they can go for more information, and who to contact with questions.
            - An example of just PowerPoints for the virtual presentation (different from above) is here: https://www.hrsd.com/sites/default/files/assets/Documents/pdfs/Engineering/Standards2022/11-10J_VirtualPresentationPowerPoint-Example2022.pdf

HRSD
Ensuring future generations inherit clean waterways

PROJECT:_____

LOCATION/DATE:_____

Name	Affiliation	City/County where you live	Contact Info

Ensuring future generations inherit clean waterways

Project Name

COMMENT CARD

NAME_____

ADDRESS_____

CITY_____ STATE_____ ZIP CODE_____

EMAIL ADDRESS_____ DATE_____

HOW DID YOU HEAR ABOUT THIS OPEN HOUSE? (Please Circle)

Mailer Locality

NextDoor Other_____

ARE YOU AN HRSD CUSTOMER? (Please Circle) Yes / No

COMMENTS:

_____

_____

_____

_____

_____

_____

_____

_____

_____

_____

_____

_____

_____

Comments and suggestions can also be sent to projects@hrsd.com

Advertisement Submission Schedule

1. Build this schedule starting backwards from your desired/ proposed meeting date using one of the two options below.
2. **Option 1**: running a *Willingness to Hold a Public Meeting*, build into the schedule enough time to: process advertisement, the 7 calendar day response time allotted to the public to call in requesting the meeting and an additional advertisement for the Public Meeting.
   Notes: if the Willingness to Hold generates 10 or more inquiries that cannot be satisfied by one-on-one meetings, HRSD will hold a Public Meeting. If no inquiries are received or the inquiries are satisfied by the one-on-one meeting, no Public Meeting is required. This option (number 1) can add over a month into the process.
3. **Option 2**: directly advertising a Public Meeting, build in enough time to meet the advertising/communications deadlines.
4. Send both Word and PDF files to the media outlet advertising.
5. Use logo w/o tag line. Use the advertisement sample provided within the attachments portion of this document.
6. Holiday Deadlines differ—need to verify deadline prior to placing ad
7. Need to verify deadlines for ads that run on any day other than listed below.
8. All project related advertisements shall be charged to the CIP associated with the project. 200-XXXXX-30-97100-GN0001-Finance

Locality	Newspaper	Run Day	Ad deadline	Due to HRSD Communications Staff (review & submission)	Newspaper contact
Metro	**Virginian Pilot**	**Sunday**	**Noon the business day prior to run date (Friday by noon)**	**1 week prior to ad deadline**	Mrs. Rawles Magee rawles.magee@pilotonline.com legals@pilotonline.com 757.222.5346 Communications Account Leila Rice - Director: **AA46585** Public Information Specialist: **AA466587**
Metro neighborhood publications	Portsmouth Currents & Suffolk Sun	Sunday Only	Wednesdays, at 3pm	**1 week prior to ad deadline**	
	Chesapeake Clipper	Publishes Fridays & Sundays	Friday Deadline: Mondays at 3pm Sunday Deadline: Wednesdays at 3pm		
	Virginia Beach Beacon	Publishes Thursdays & Sundays	Thursday deadline: the Friday before, at 3pm Sunday Deadline: Tuesdays at 3pm		
Metro	**Daily Press**	**Sunday**	**Noon the business day prior to run date** (Friday by noon)	**1 week prior to ad deadline**	Hope Askew (haskew@dailypress.com) Communications Account Leila Rice - Director: **CU00613641** Public Information Specialist: **CU00613650**
King William	Richmond Times Dispatch	Sunday	3 business days	**1 week prior to ad deadline**	Bock, Pamela S. PBock@timesdispatch.com 804.649.6716 Communications Account All HRSD: **3589014**
Mathews	Gloucester-Mathews Gazette -Journal	Wednesday	Noon Monday	**1 week prior to ad deadline**	Tina Nelson tnelson@gazettejournal.net 804-693-3101 Communications Account Leila Rice - Director: **102220** Public Information Specialist: **102602**
Surry	Smithfield Times	Wednesday	Noon Monday	**1 week prior to ad deadline**	Wendy Kantsios wendyk@smithfieldtimes.com 757.357.3288 (o) 757.618.3478 (c – text friendly) Communications Account All HRSD: **#XXXXXXXXX**
Urbanna	Southside Sentinel	Thursday	10 am Tuesday	**1 week prior to ad deadline**	Wendy Burch wburch@ssentinel.com 804.758.2328 Communications Account Leila Rice - Director: **2857** Public Information Specialist: **2858**
West Point	Tidewater Review	Wednesday	Friday	**1 week prior to ad deadline**	O'Brien, Brittany bobrien@tidewaterreview.com 804-843-2282 (opt. 2) Communications Account Leila Rice - Director: **CU00613641**

					Public Information Specialist: **CU00613650** *Account #s are same as Daily Press*

Cleaning wastewater every day for a better Bay.

15th and 16th Streets Sewer Replacement Project

(CIP BH015600)

Virtual Public Information Presentation

Project Team

- Hampton Roads Sanitation District (HRSD) – Owner
- WRA - Design Engineer, Construction Inspections
- Tidewater Utility Construction, Inc - Construction Contractor

HRSD

Cleaning wastewater every day for a better Bay.

Mission

We protect public health and the waters of Hampton Roads by treating wastewater effectively.

Why are we doing this project?

- Replaces an existing pipeline of the same size that has experienced failures due to age, corrosion, and poor condition
- The new pipeline will help reduce future failures thus providing protection for the neighborhood and environment
- Part of an overall effort to enhance quality of life in an area of aging infrastructure

What is involved?

- Construction of a new 36-inch pipeline as part of the collection system, which conveys wastewater to an HRSD Treatment Plant.
- Excavation within the roadway to install the new pipeline.
- Restoration and re-paving of the roadway upon completion.

How will I be impacted during construction?

- We strive to minimize neighborhood impacts. However, we anticipate there may be:
  - Periodic lane closures.
  - Minor interruptions in utility services – will be limited to 1-2 hours and notification will be provided ahead of time for individual residences and businesses.
  - Typical construction noise such as engines, backup alarms, material deliver, diesel generators and air compressors
- Access to residences and a minimum of one access to businesses will be maintained.
- Mail, trash, and emergency services will be maintained.
- Most construction will be during daylight hours, however there may be a need for extended hours and rare nighttime construction for bypass connections to be made

Project Schedule

- Construction Activities – Fall 2020 through Spring 2022
- Individual notices and doorhangers will be provided to residences and businesses when crews are in the area during construction.

HRSD

Cleaning wastewater every day for a better Bay.

Let’s take a look at the pipeline route!

15th and 16th Streets Sewer Replacement

HRSD

The mission of HRSD is to protect public health and the waters of Hampton Roads by treating wastewater effectively.

15th and 16th Streets Sewer Replacement

HRSD

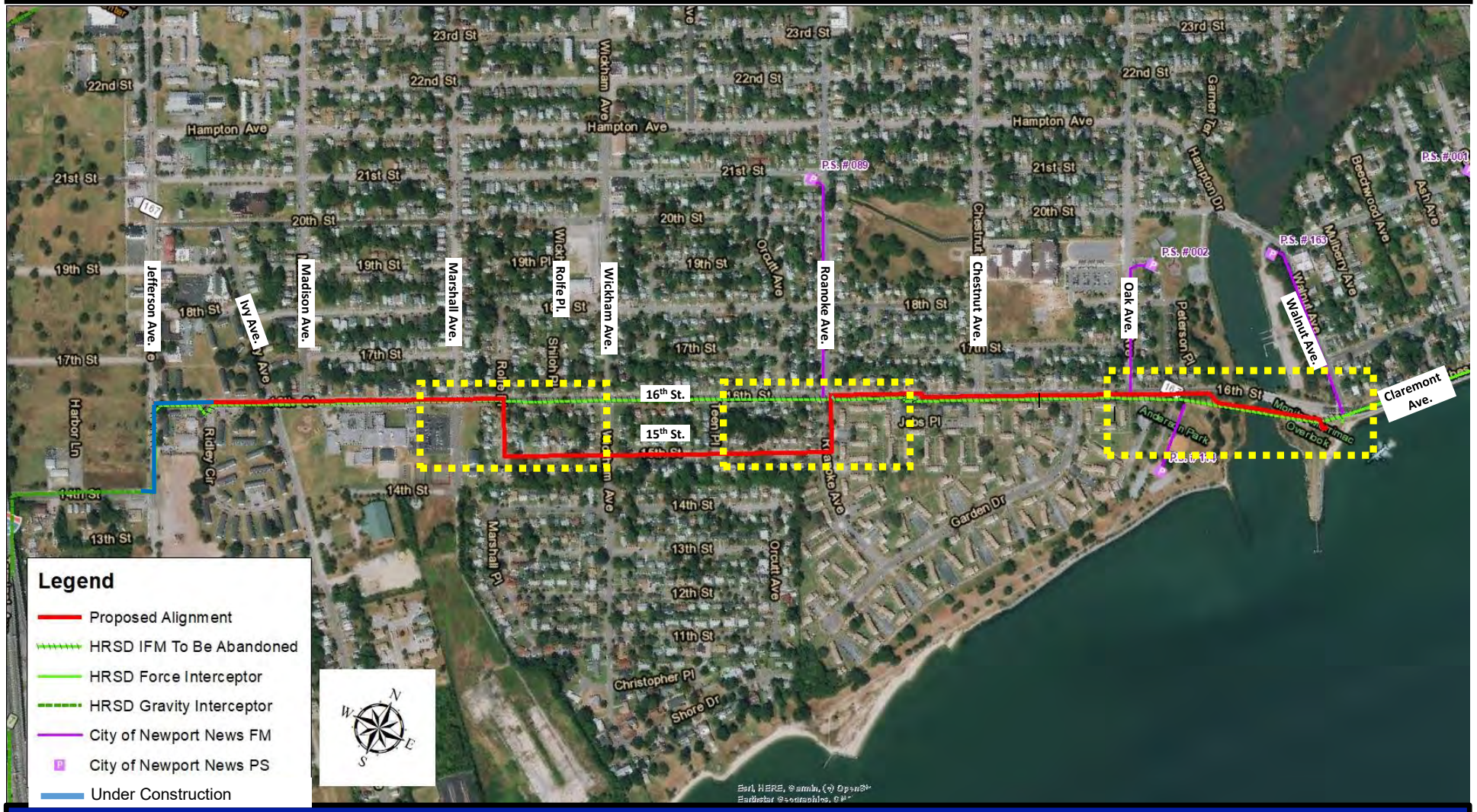

The mission of HRSD is to protect public health and the waters of Hampton Roads by treating wastewater effectively.

Salters Creek Crossing – Anderson Park Section

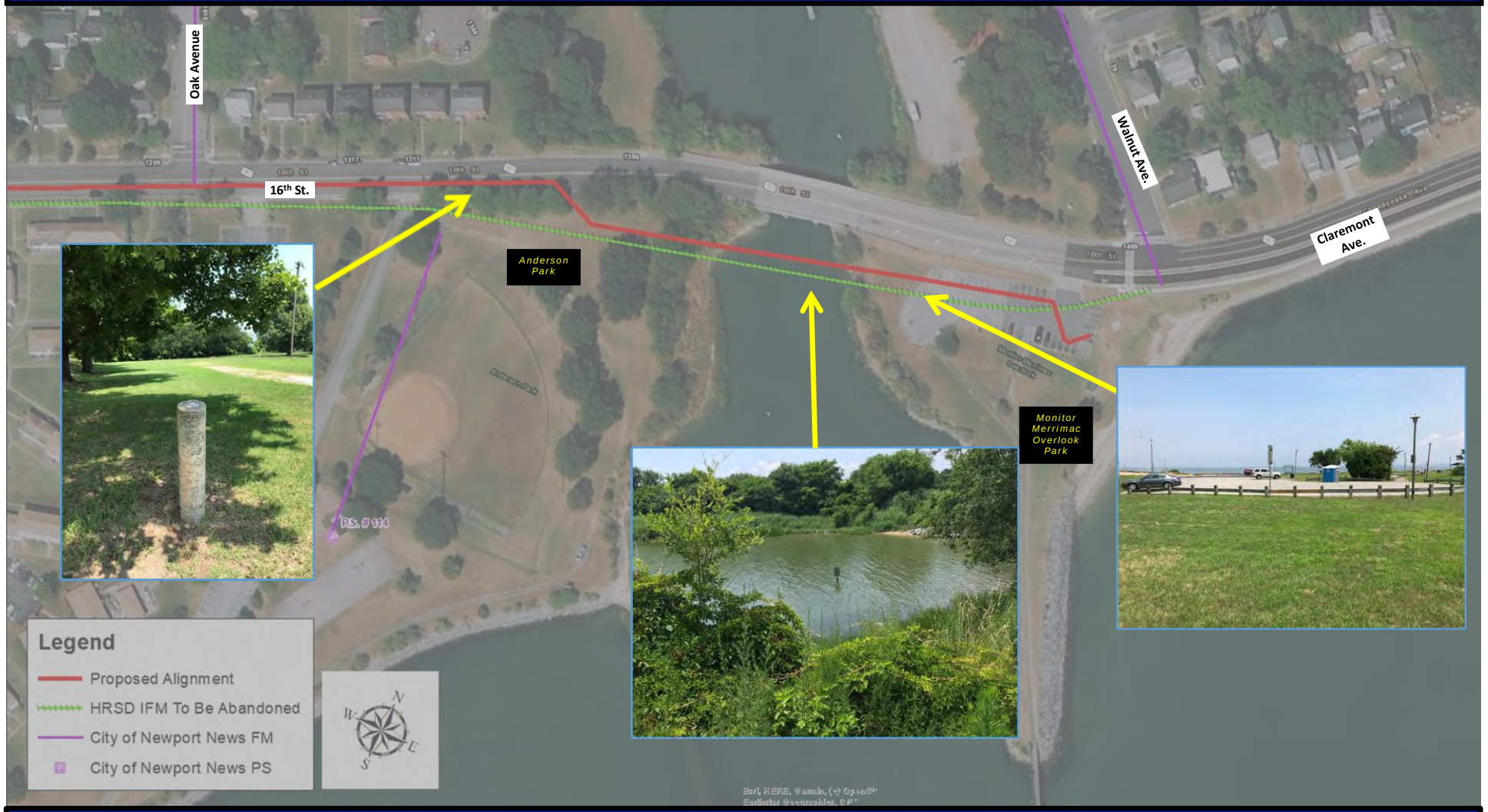

The mission of HRSD is to protect public health and the waters of Hampton Roads by treating wastewater effectively.

Transition from 16TH Street to 15TH Street Via Roanoke Avenue

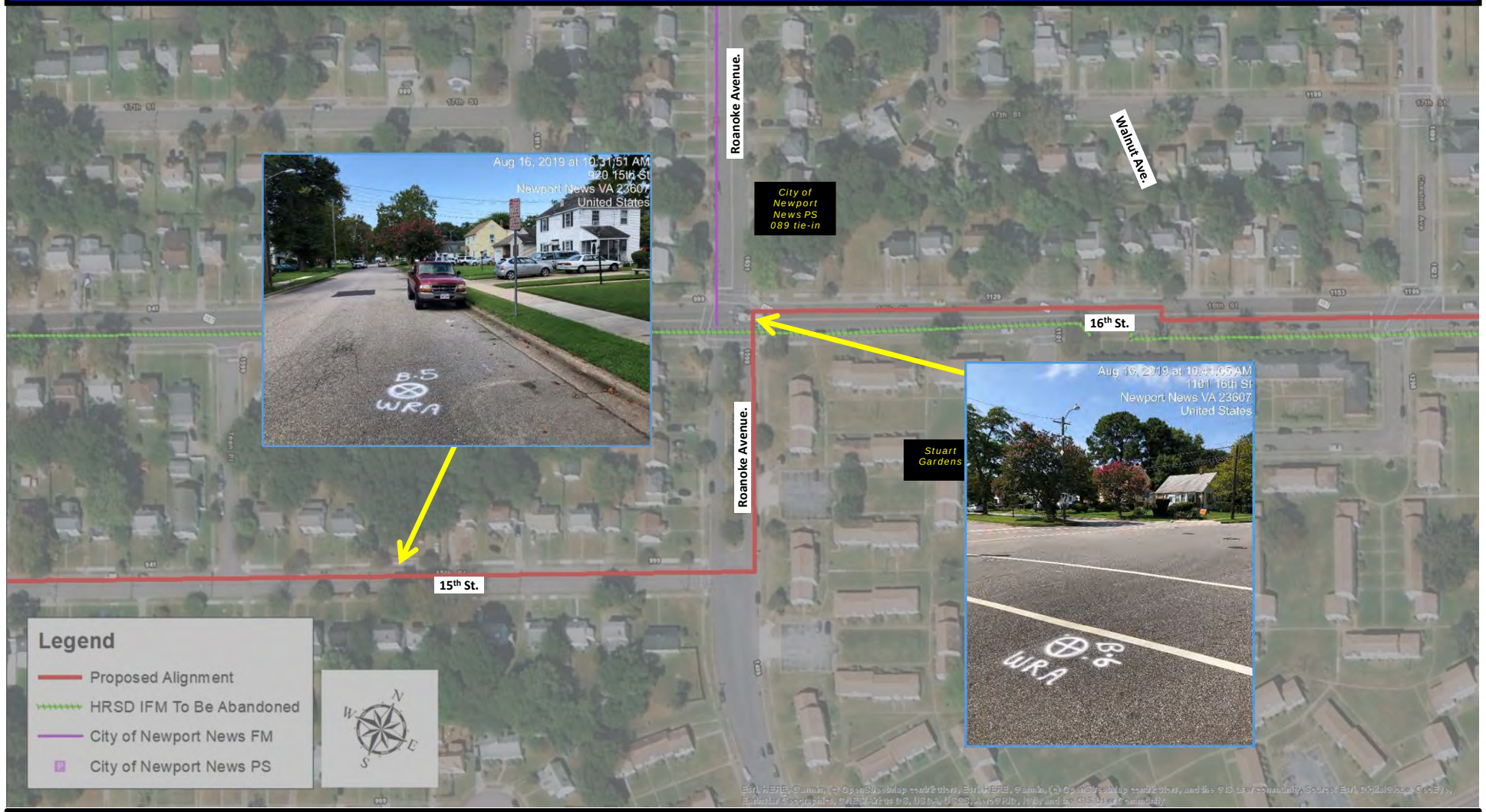

The mission of HRSD is to protect public health and the waters of Hampton Roads by treating wastewater effectively.

Transition from 15TH Street to 16TH Street via Rolfe Place & Achievable Dream Academy

HRSD

The mission of HRSD is to protect public health and the waters of Hampton Roads by treating wastewater effectively.

WE LOOK FORWARD TO A SUCCESSFUL PROJECT!

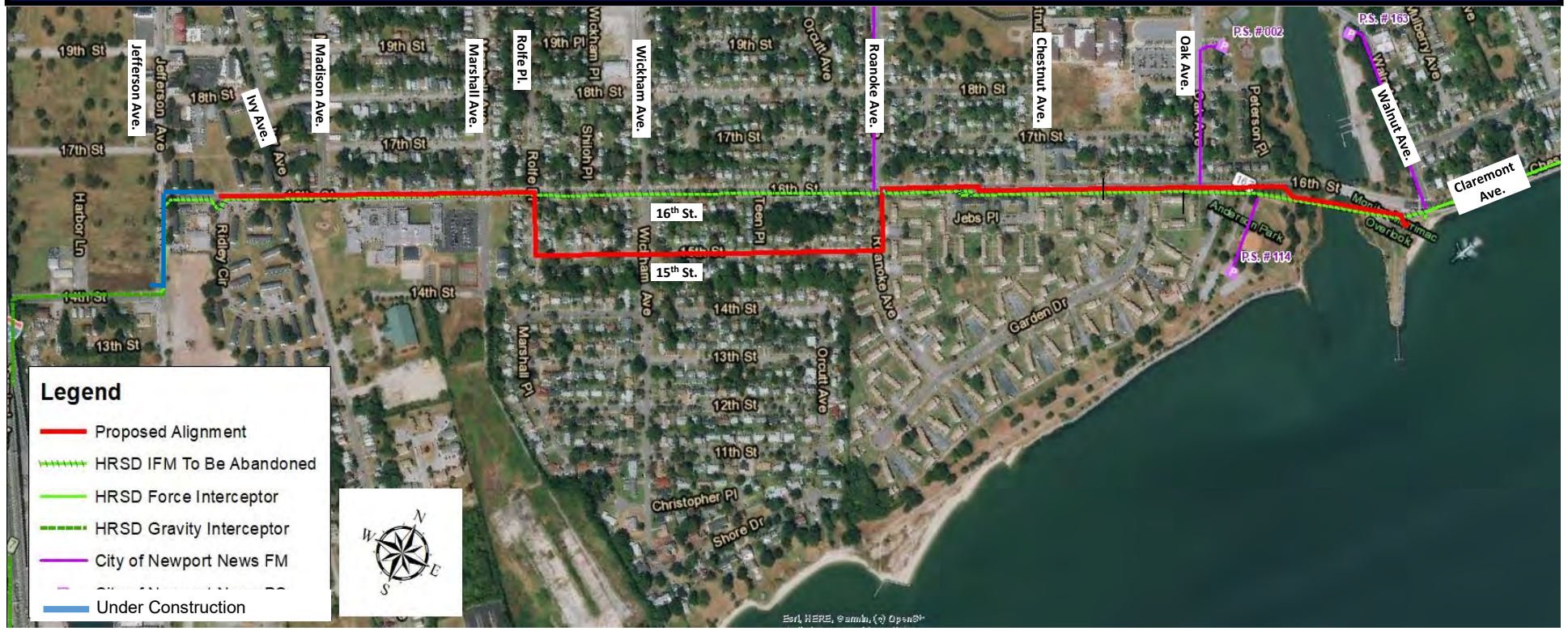

Where can I go for more information?

- Project Website:

  www.hrsd.com/15th-and-16th-streets-sewer-replacement

- Sign Up to Receive Notification of Website Updates:

  www.hrsd.com/subscriptions

- HRSD Public Information Specialist:

  Lisa Bolen
  lbolen@hrsd.com
  (757) 460-7000

- HRSD Project Manager:

  Phil Hughes
  Projects@hrsd.com

New Project Upload – July 18, 2017

CONSTRUCTION STATUS – VIRGINIA BEACH

Approved by HRSD Communications Staff _____

Project
"Providence Road Pressure Reducing Station" {Public Name}
Providence Road Interim Pressure Reducing Station {Full CIP Name & Number}

Overview
HRSD is undertaking a project to replace piping and valves at its existing Providence Road Pressure Reducing Station. This effort will also reduce the risk of sanitary sewer overflows during heavy rain events such as Nor'easters or hurricanes. {Provide a general overview and reason for the project}

Update
10/3/2013 Bids were received
10/22/2013 Contract awarded to (?)
XXXX Notice to proceed awarded
***Current Project Related Construction Areas*:** Construction has not started at this time

See the **Project Map** attachment for areas that will be involved in construction. {This line is standard to all projects-do not edit}

Roads Affected
The work will be confined to HRSD property; however, construction traffic will be entering and exiting the site on Old Providence Road between Avalon Avenue and Maralon Drive. Comprehensive traffic control plans will be implemented to minimize inconvenience. {List all roads and intersections that will be involved}

Key Dates

Staging:	Actual Month to stage	XXXX
Construction:	By seasons	Fall 2013 – Spring 2015
Restoration:		Immediately following construction when seasonably appropriate

Project Cost
$2,500,000 {TOTAL Project Costs Design & Construction. Collected from CIP unless an updated figure is known}

HRSD Contacts

Public Information Specialist:	Lisa Bolen	757.460.7000 (Office)
City of XXX Contact:	Name	local Office and Cell numbers
Onsite Inspector: (immediate/emergent concern)	Name	local Office and Cell numbers
HRSD Project Manager:	Name	

Media Inquiries:

Director of Communications:	Leila Rice	757.460.7056 (Office) 757.642.1321 (Cell)

Project Partners

Engineering Consultant Firm:	XXX Engineering, Inc., City, State	
Engineering Consultant Project Lead:	XXX	757.XXX.XXXX (Office) internal use only 757.XXX.XXXX (Cell) internal use only
Contractor:	XXX, City, State	757.XXX.XXXX (Office) internal use only
Contractor Field Project Manager:	Name	757.XXX.XXXX (Cell) internal use only

Additional Information
Email projects@hrsd.com

Frequently Asked Questions

HRSD

Public Project Name

Why is this project necessary?
A. This project is a necessary part of a larger, federally-mandated program to reduce sewage overflows during rainstorms. This project will provide updated infrastructure that will help ensure HRSD's ability to protect public health and the environment for decades to come.

How is the location of the pipe route/project site decided?
A. We look at several routes/sites to determine what meets HRSD's needs of availability, price, location of the site to the existing pump station, property agreement terms, ease of access to the property for construction and future maintenance.

Will the project affect the flow of traffic in the neighborhood?
A. Disruptions to traffic will be minimized, and in most cases, a single lane of traffic will be maintained. No planned detours are anticipated but flagging will be used to help direct traffic as needed. Although the majority of the project work will be located within the public and private right-of ways, much of the construction will be "trenchless," meaning the contractor will not need to dig up the street to fix the pipes. However, certain sections of sewer are in very poor condition and must be replaced by digging.

Will access to properties along the route be maintained during construction?
A. The contractor will ensure that access to residences and at least one entrance to businesses will be maintained throughout construction. Trash and mail services will not be affected. If necessary, the contractor will move trash containers from within a work zone to an area accessible for pickup and will be responsible for returning them to each residence.

What are the general working hours for the project?
A. Work will typically take place Monday through Friday during daylight hours (8 a.m. - 5 p.m.). However, there may be times when extended hours, work at night, or weekend work may be necessary.

Will there be any interruptions to my water or sewer service?
A. Your sewer service will be temporarily interrupted if work is to be performed on the sewer lateral pipe that serves your property. The contractor will notify you before your lateral is to be rehabilitated so you can plan appropriately. Sewer service typically will be restored within several hours. Your water service should not be affected by this project.

Will construction affect the existing pavement?
A. Where sewer and lateral pipes are dug up, asphalt, curb, gutters, driveway aprons, and grass will be removed and then restored upon completion of the project.

What sort of noise should I expect during construction?
A. The typical construction noises such as equipment engines, back-up alarms, materials being delivered, diesel generators, air compressors, sawing, and associated activities should be anticipated.

Will material and equipment be stored on-site?
A. The contractor has negotiated with a private property owner for a storage area in the project vicinity and this site will be used for most of the equipment and supplies. The contractor will keep some supplies within the active work zone, in the public right-of way.

Where will construction workers park?
A. Construction workers will not be allowed to park their personal vehicles on the public streets. However, work trucks will be allowed to park within the active work zone.

What is the cost of the project?
A. The estimated cost for the project is $3 million and is financed by the wastewater treatment fees paid by HRSD customers.

How can I receive regular project updates?
A. Regular project updates are posted on the HRSD website at www.hrsd.com/construction-status. You may also sign up at www.hrsd.com/subscriptions to receive an email notification whenever the website has an update about the project.

Project Map
Public Project Name Here

HRSD

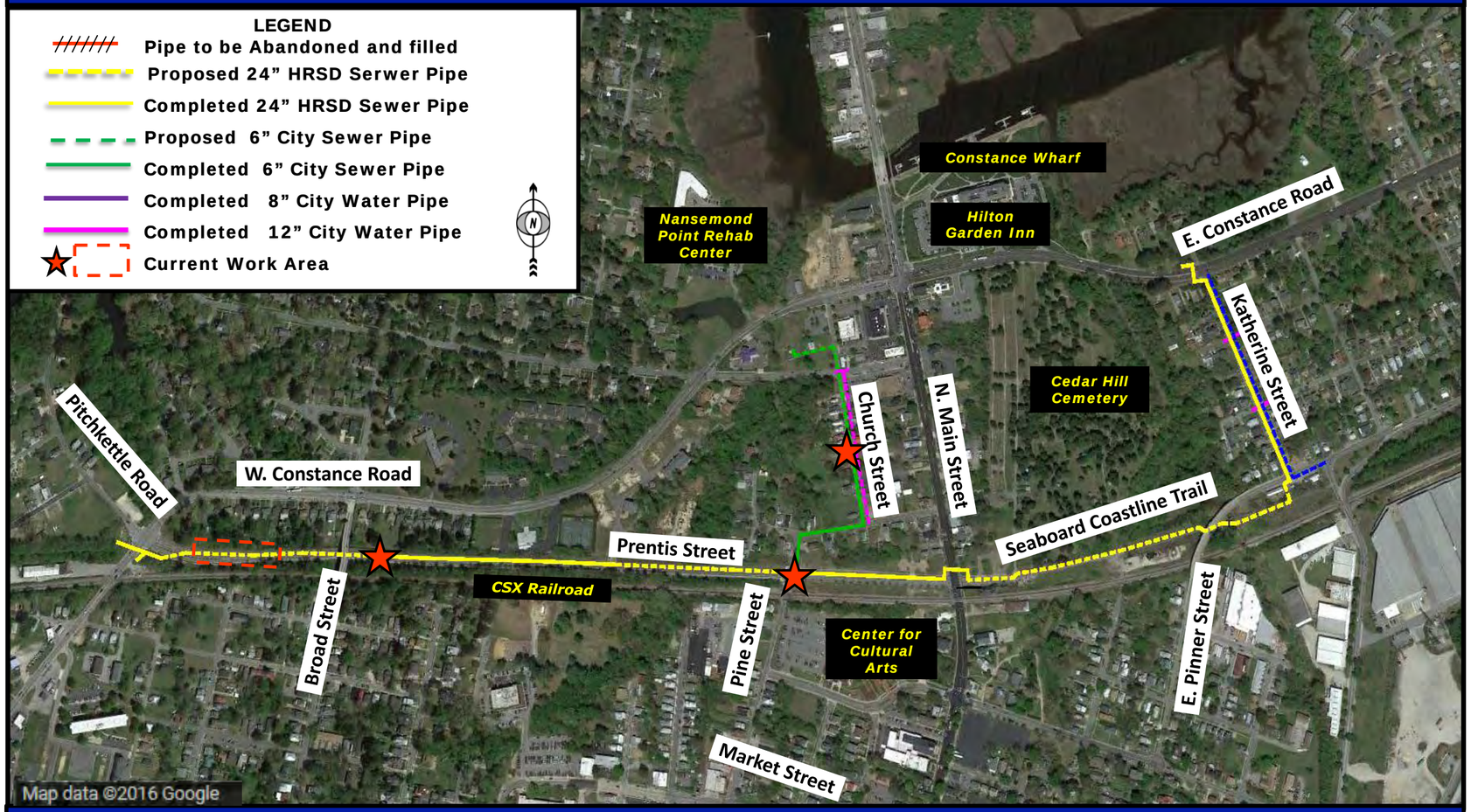

The vision of HRSD is that future generations will inherit clean waterways and be able to keep them clean.

- Please keep to the same format as provided, same font and sizing, same legend and directional.
- This item MUST be returned in a fully editable version, including the map background used and all line markings.
- Do not embed the map, street labels or pipeline markings.
- Whenever possible use a Google map (Earth View) image
  - Map Content must include source attribution within the maps area.
  - You can find the attribution in the line(s) shown on the bottom of the Content in the products along with copyright notices, such as "Map data ©2015 Google". Note that the exact text of the attribution changes based on geography and content type. The attribution text must be legible to the average viewer or reader.
- Turn off street labels in Google and create your own (using the template/format provided) for the most prevalent streets and building.
- Preferred color selections
  - All colors should be those that standout against the background

PROJECT MAP

Sewer Rehabilitation Project: Weblin Place

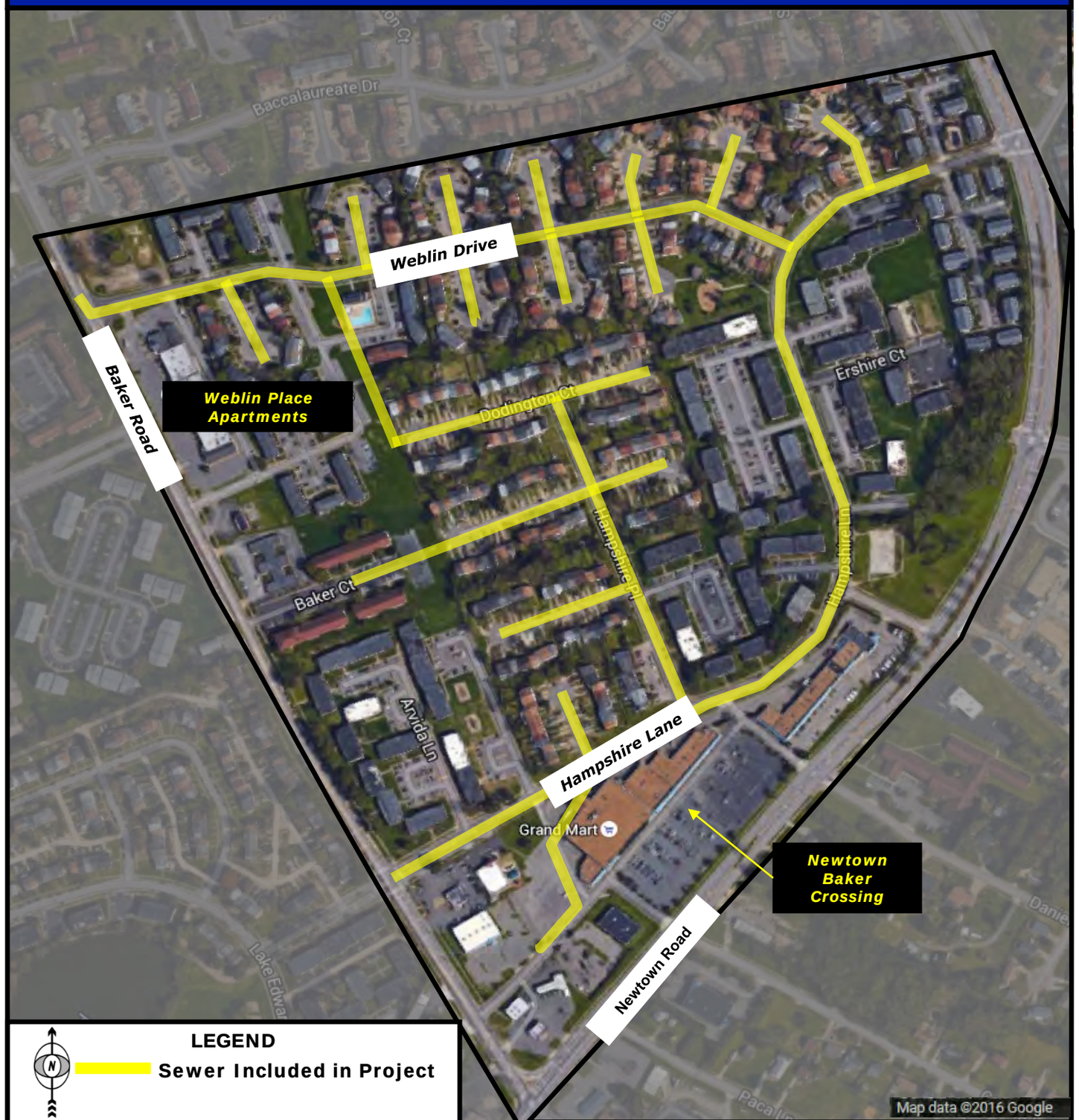

The vision of HRSD is that future generations will inherit clean waterways and be able to keep them clean.

- Please keep to the same format as provided, same font and sizing, same legend and directional.
- This item MUST be returned in a fully editable version, including the map background used and all line markings.
- Do not embed the map, street labels or pipeline markings.
- Whenever possible use a Google map (Earth View) image
  - Map Content must include source attribution within the maps area.
  - You can find the attribution in the line(s) shown on the bottom of the Content in the products along with copyright notices, such as “Map data ©2015 Google”. Note that the exact text of the attribution changes based on geography and content type. The attribution text must be legible to the average viewer or reader.
- Turn off street labels in Google and create your own (using the template/format provided) for the most prevalent streets and building.
- Preferred color selections
  - All colors should be those that standout against the background

To all Stakeholders:

Construction of the HRSD Downtown Norfolk Pipeline Replacement project has begun/is ongoing.

Please use this link www.hrsd.com/subscriptions to be directed to the HRSD Subscriptions web page. From there, you can fill out the form to receive email notifications about the project when there is an update on the website. You can choose to be notified about a specific HRSD project, or you can choose to be notified about any HRSD project by selecting one or more localities.

Specific project areas scheduled for work will be notified via field distributed project flyers within one week of the actual work.

Should you have any questions or concerns, please feel free to reply to this email with your contact information and a project representative will contact you.

Thank you.

(Project Team Member,
email signature line, and contact info)

---

*Ensure that this email is going out as a Bcc to all parties
**Ensure that you have included all recent inquiring parties in and are maintaining the project's-email distribution group (city partners, meetings, and citizen correspondence).

Notice to Neighbors
Month Year

Public Project Name

HRSD, your regional wastewater treatment utility, in coordination with the City of Newport News, is planning a project in your neighborhood to replace the existing HRSD and City sanitary sewer pipelines and public sewer service connections that are nearing the end of their useful life. This replacement project will also improve the system's performance and ensure continued, reliable sewer service in the future. The answers to some *Frequently Asked Questions (FAQs)* are provided on the back of this notice.

Project Overview

The project is located in the neighborhood surrounding Huxley Place from the Carnegie Drive intersection to the northern end of Huxley Place near City Center Boulevard and at certain locations along Alpine Street and Warwick Boulevard. This project includes pipelines, manholes, as well as some public water service and sewer service lateral pipes. Theses pipes will be repaired or replaced within the city right-of-way. The owner of any private sewer service pipe that is found in need of repair, will be contacted. The contractor will maintain a clean job site and minimize traffic disruption.

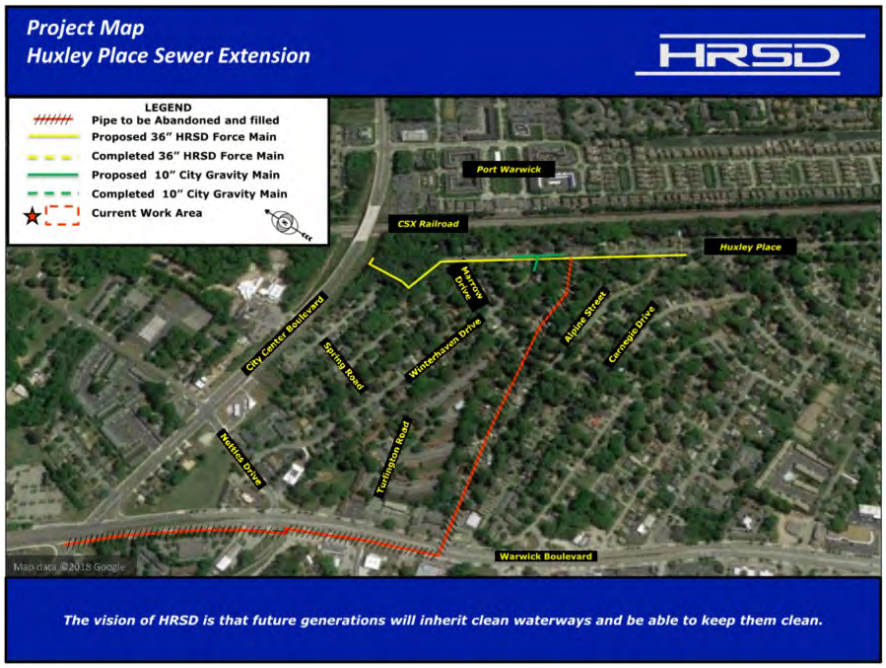

Project Schedule

Staging: **September 2019**

Construction:
Phase 1: (work within the public right-of-way along Huxley Place)
Fall 2019 – Fall 2020

Phase 2: (work within the public right-of-way along Alpine Street and Warwick Boulevard)
Fall 2020

Restoration:
Immediately following construction when seasonably appropriate

You also may visit www.hrsd.com/construction-status for additional information and project updates

If you have any questions, concerns, or comments about the project, please feel free to contact Lisa Bolen, HRSD Public Information Specialist, at 757.460.7000 or LBolen@hrsd.com.

Thank you for your support of this effort to help achieve HRSD's vision: ***Future generations will inherit clean waterways and be able to keep them clean.***

PO Box 5911, Virginia Beach, VA 23471-0911 • 757.460.7000

Commissioners: Stephen C. Rodriguez, Chair • Frederick N. Elofson, CPA, Vice-Chair • Vishnu K. Lakdawala, PhD
Michael E. Glenn • Willie Levenston, Jr. • Elizabeth A. Taraski, PhD • Nancy J. Stern • Ann W. Templeman
www.hrsd.com

Frequently Asked Questions

Public Project Name

Why is this project necessary?

A. This project is a necessary to increase the reliability of the sewage collection system by replacing aging infrastructure and eliminating unvented high points in the existing sewer line.

Will the project affect the flow of traffic in the neighborhood?

A. Comprehensive traffic control plans will be implemented to minimize disruptions to the flow of traffic. There will be planned detours during some phases of construction. Signage will be placed prior to these detours.

Will access to properties along the route be maintained during construction?

A. The contractor will ensure that access to residences, and at least one entrance to businesses, will be maintained throughout construction. Trash and mail services will not be affected. If necessary, the contractor will move trash containers from within a work zone to an area accessible for pickup and will be responsible for returning them to each residence.

What are the general working hours for the project?

A. Work will typically take place Monday through Friday during daylight hours (8 a.m. - 4 p.m.). However, there may be times when extended hours, work at night, or weekend work may be necessary.

Will there be any interruptions to my water or sewer service?

A. Your sewer service will be temporarily interrupted if work is to be performed on the sewer lateral pipe that serves your property. The contractor will notify you before your lateral is to be replaced so you can plan appropriately. Sewer service typically will be restored within several hours. Your water service should not be affected by this project.

Will construction affect the existing pavement?

A. Where sewer and lateral pipes are dug up, asphalt, curb, gutters, driveway aprons, and grass will be removed and then restored upon completion of the project.

What sort of noise should I expect during construction?

A. The typical construction noises such as equipment engines, back-up alarms, materials being delivered, diesel generators, air compressors, sawing, etc. should be anticipated.

Will material and equipment be stored on-site?

A. It is anticipated that the contractor will negotiate with a private property owner for a storage area in the project vicinity, and this site will be used for most of the equipment and supplies. The contractor will keep some supplies within the active work zone, in the public right-of way.

Where will construction workers park?

A. Construction workers will not be allowed to park their personal vehicles on the public streets. However, work trucks will be allowed to park within the active work zone.

What is the cost of the project?

A. The estimated cost for the project is approximately $5 million and is financed by the wastewater treatment fees paid by HRSD ratepayers.

How can I receive regular project updates?

A. Regular project updates are posted on the HRSD website at www.hrsd.com/construction-status. You may also sign up at www.hrsd.com/subscriptions to receive an email notification whenever the website has an update about the project.

Ghent Area Sanitary Sewer Pipeline Replacement

Your investment in protecting your health and area waterways

Design Engineer:
O'Brien & Gere
(757) 431-2966

Construction Contractor:
T.A. Sheets Mechanical
(757) 627-3000

For Information:
www.HRSD.com
(757) 460-7000

Construction work ahead,
ensuring future generations inherit clean waterways and can keep them clean

Information: www.hrsd.com/construction-status

Projects@hrsd.com | (757) 460-7000

HRSD Project Site - Sign Specifications

Sign layout will be provided by HRSD.

GRAPHICS:
The lettering and graphics will be a full sheet, digitally printed white vinyl decal using Orajet 3651 Intermediate Gloss Vinyl (or equivalent rated for 5 years exterior use) with over laminate for UV protection and scratch resistance, applied to the painted substrate. The printed colors are to match Pantone 3005 (blue) and 354 (green). The sign is single faced. Font: Universe Bold Extended 63 (UniverseLTStd-Bold).

Pantone 3005 (blue) RGB 0/ 132 / 201, Pantone 354 (green) RBG 0 / 183 / 96

Sign Types/Project Type:

WetWeather/Locality Neighborhood Program Signs
Sign substrate to be 24” x 48” with curved corners and either of the materials below.

CIP or General Project Signs
Sign substrate to be 32” x 64” with curved corners and either of the materials below.

One half inch thick, medium density overlay (sign type plywood), good one side with white gloss enamel on the face, one coat of white latex primer on the reverse.

OR

6 mm thick Aluminum Composite Material composed of solid thermoplastic core of low density polyethylene, bonded between two sheets of .008" aluminum. The painted surface of the aluminum sheet is coated with a white polyester coating.

INSTALLATION:
Each sign shall be installed using two (2) U.S. Barricades (equivalent or better) temporary traffic sign stands (Model TD8400, manufactured by Three D Traffic Works) consisting of a 18"x 27"x 4.5", 37 lb. rubber, Universal Sign Stand Base & Insert, a 1¾" x 1¾" x 72", 16-Gauge galvanized steel upright post and safety D-clip lock pins (ensuring a breakaway feature is utilized).

Two 5ft upright posts shall be secured to the backside of the sign using two 5/16” x 3” galvanized hex-head bolts with washers, set on the centerline of the sign, 16” on center, 4” from top and bottom of sign.

"URB 1827" tm

Universal Rubber Base System

Model #: TD8400

Weighted Base for Uprights

Ideal for Temporary In-Street Signage.

Collars convert standard rubber base into an Upright Holder
(see reverse side for possibilies)

- Made in the USA. Made from 100% Post-Consumer Recycled Rubber.
- Two large molded-in handles for easy placement & retrieval.
- The large rubber footprint (18"x27") is skid resistant & stable even in windy conditions, while still offering a narrow profile on the roadway.

We got the works!!

Three D TrafficWORKS

Innovative Traffic Safety Products

Made in USA

430 North Varney Street, Burbank, CA. 91502
T: 877 843 9757 F: 818 841 5096
Email: sales@trafficwks.com Web Site: www.trafficwks.com

California Environmental Protection Agency
Integrated Waste Management Board

Zero Waste - You make it happen!

Stack Height: 4.50”
includes Collar.

Collar is made from 100% Recycled Content Black Hi-Impact Plastic.

Weight: 37 lbs. without Collar.
39 lbs with Collar & Fasteners.
Made from 100% Post-Consumer Recycled Rubber derived from passenger car tires!

1.750” X 72” Black Plastic Upright is available and comes pre-drilled, ready for use. Part # 845100.

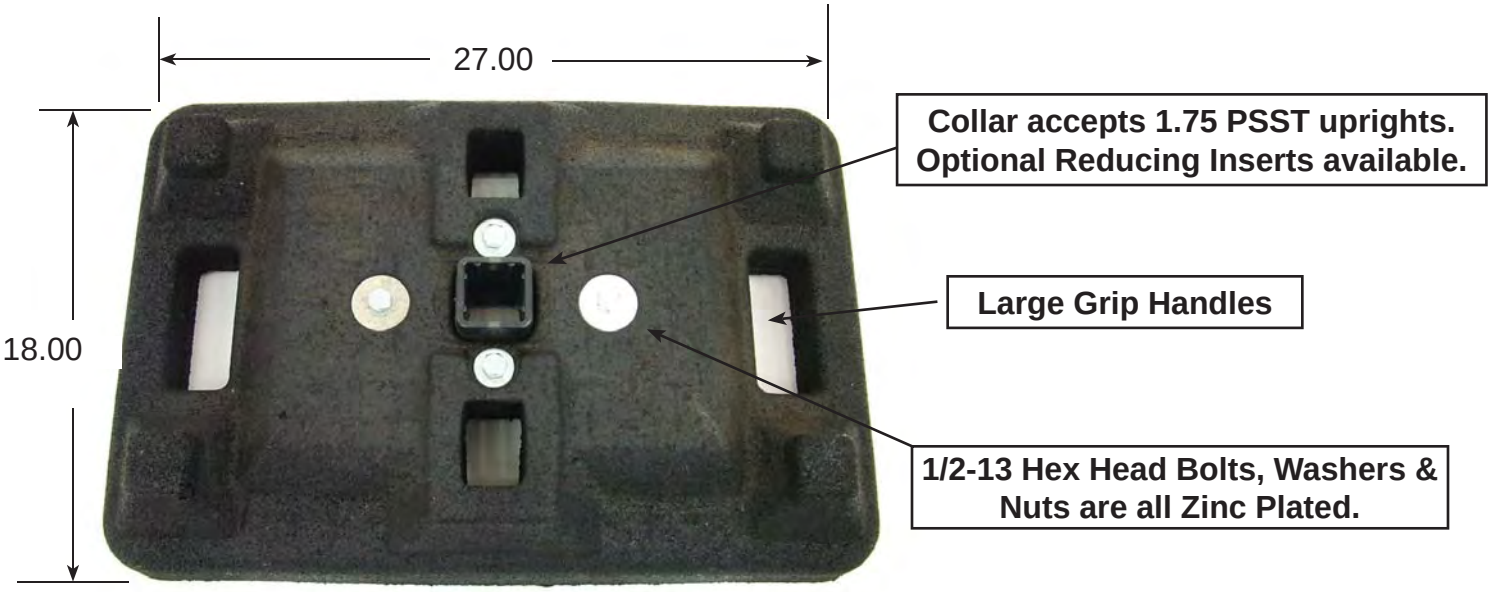

Overall height is 4.50”, including Collar for PSST Inserts.

Three D Traffic Works 430 N. Varney St. Burbank,CA 91502 T:877.843.9757 F:818.841.5096 www.trafficwks.com

CONSTRUCTION NOTICE
UPDATE (#)
City
Month Year

Public Project Name

--Utility Work to Begin--

HRSD, your regional wastewater treatment utility, will begin work to install a sanitary sewer pipeline at the intersection of Orcutt Avenue and Mercury Boulevard. This work should take place primarily between the hours of **8 a.m. to 6 p.m**., **Monday – Friday**.

Construction Update:

- **Beginning as early as (anticipated work begin date), pipe installation work will begin in the vicinity of your home/business.**
- **This work will take place during daytime and predominately in the intersection.**
- **Be aware, traffic patterns will shift and will include partial street closures. Traffic control measures and detours will be in place.**
- This work should not affect your water or sewer services.
- This portion of the work is anticipated to be completed in 3-4 weeks. Due to the nature of construction, work is weather and situation dependent and dates are subject to change.

While our project team works diligently to minimize impacts, you may notice increased noise, traffic, crews, and heavy equipment (with back-up safety alarms) associated with construction. Please take care when traveling around the construction area and for your safety, do not enter the site.

Please visit the project's webpage for more information and updates:
www.hrsd.com/construction-status

Thank you for your support of this effort to help achieve HRSD's vision**:**
Future generations will inherit clean waterways and be able to keep them clean.

Should you have any questions or comments, you may contact:

HRSD Public Information Specialist:
Lisa Bolen
(757) 460-7000
lbolen@hrsd.com

HRSD Project Manager:
Name
Projects@hrsd.com

Onsite Inspector (Emergent Concerns):
Name
(xxx) Cell Phone

Dear Neighbor:

This letter is to introduce the bearer as an individual authorized to perform work on behalf of HRSD, your regional wastewater treatment utility.

We have retained the firm of XXX, Inc. to perform closed-circuit television (CCTV) inspections of the public and private sewer laterals and other tasks to help us locate needed repairs in your neighborhood. Some of their work may require access to pipelines and other facilities that lie within public rights-of-way and adjacent to your property. These activities typically do not affect your sewer service.

If you have concerns about the presence or performance of any worker while accomplishing these duties on our behalf, please do not hesitate to contact me at (757) 460-7000.

We appreciate your understanding and assistance as we work to improve our system and fulfill HRSD's vision: *Future generations will inherit clean waterways and be able to keep them clean.*

Sincerely,

Lisa Bolen
HRSD Public Information Specialist

PO Box 5911, Virginia Beach, VA 23471-0911 • 757.460.7000

Commissioners: Stephen C. Rodriguez, Chair • Frederick N. Elofson, CPA, Vice-Chair • Vishnu K. Lakdawala, PhD
Michael E. Glenn • Willie Levenston, Jr. • Elizabeth A. Taraski, PhD • Nancy J. Stern • Ann W. Templeman
www.hrsd.com

Notice to Neighbors

August 2022

HRSD is undertaking an important project to clean and inspect the sanitary sewer pipelines and laterals that serve your neighborhood. This maintenance activity will help eliminate blockages that could lead to sewage overflows and also allow us to insert a small TV camera into the pipeline to determine if it is in need of replacement. Once these inspections have been completed, any necessary repairs will begin immediately. However, this work is weather and situation dependent.

HRSD has retained the firm XXX to perform this work for us. **Beginning the week of September 7**, you can expect to see their trucks and employees in your area, **Monday - Friday during the hours of 8:00 a.m. until 5:00 p.m.** Some of their work may require access to pipelines that lie within the public right-of-way, or adjacent to, or at the cleanout located on your property. They will be cleaning the pipes by forcing water through them. There are some things you can do to help with the effort:

1. **Please loosen the lid on your sewer clean out.** The crew will come onto your property to do this if the clean out has been installed beyond the public right-of-way.
2. **Please flush all your toilets and run water down the sinks and tubs** that you have not used in the last few days.
3. **Please leave all the toilet lids DOWN** while the crew is working near your home.

There have been occasions when a toilet has overflowed while cleaning was underway. If this happens while you are at home, please notify the XXX foreman overseeing the job. They will ask to enter your home with a colleague to inspect the bathroom and arrange for any cleaning that might be necessary.

You also can report any issues stemming from the work underway in your neighborhood by calling XXX at 757-XXX-XXXX from 8:00 a.m. to 5:00 p.m. After hours you may call 757-XXX-XXXX.

HRSD expects our contractors to work in a safe and effective manner, and to be courteous in their interactions with the public. If you have any concerns about the work being accomplished in your area or the level of customer service provided, please call the HRSD Public Information Specialist at 757-460-7000.

We appreciate your understanding and assistance as we work to improve your sanitary sewer system so we can better protect public health and area waterways.

Sincerely,

Lisa Bolen
HRSD Public Information Specialist

PO Box 5911, Virginia Beach, VA 23471-0911 • 757.460.7000

Commissioners: Stephen C. Rodriguez, Chair • Frederick N. Elofson, CPA, Vice-Chair • Vishnu K. Lakdawala, PhD
Michael E. Glenn • Willie Levenston, Jr. • Elizabeth A. Taraski, PhD • Nancy J. Stern • Ann W. Templeman
www.hrsd.com

SMOKE TESTING NOTICE
Month Year

Sanitary Sewer Testing to Begin

--City of Virginia Beach--

Smoke testing of the sanitary sewer system will take place within the XXXX neighborhood in the City of Virginia Beach from late October through December.

Testing along your street is planned between these dates:

_____

(This schedule is situation and weather dependent)

This non-invasive test of the system does not require private property access and will usually take place Monday through Friday from 7 a.m. to 5 p.m., unless in a school zone.

Please read the back of this notice for some tips and answers to some Frequently Asked Questions about what to expect during the Smoke Testing.

Frequently Asked Questions

Smoke Testing

Q: Do I need to be at home during smoke testing?
A: No.

Q: What is the purpose of and how will the smoke testing be accomplished?
A: Smoke testing is used to find possible leaks in the sanitary sewer system. During this test, non-toxic, artificially created smoke (like a fog machine at a concert) is blown into access points (manholes) in the pipe. This smoke will escape through defects in the pipe, such as holes or cracks, or through illicit connections, such as roof leaders, and be visible above ground. Plumes coming from plumbing vents and manhole rims are normal. The plumes may be marked with flags, and defects will be noted. The plumes or markers may also be photographed. The fire department will be notified of smoke testing plans.

Q: What do I need to do to prepare for smoke testing?
A: When you receive notice that smoke testing will take place, you should check to see that all drain traps under sinks, toilets, washing facilities, and floor drains have water in them. To fill them, simply run each faucet for 30 – 60 seconds, flush toilets, or fill the drains with about 3 cups of water.

Q: What should I do if I have pets in the house and will not be home during smoke testing?
A: The smoke is not harmful to pets. It would be a good idea to leave several windows partially open for ventilation, should any smoke enter the building. If you have proper plumbing connections and all of the drain traps have water in them, there should not be any problems.

Q: Is the smoke harmful to humans or furnishings?
A: No. It may make you cough, but it is not harmful to your health and will not harm clothing, drapes, or furniture.

Q: What should I do if smoke gets into the house and how long will it take to dissipate?
A: If smoke enters your home during testing, please notify the contractor immediately, open windows to allow ventilation, and note the location of the smoke. Smoke inside your home can help identify bad plumbing connections or a cracked seal around a toilet. Smoke alarms may also sound. The smoke will clear within a few moments. The amount of time required will depend upon how much smoke enters the building and how much ventilation you can provide.

Q: Who will conduct these tests?
A: HRSD has retained Brown and Caldwell to manage the testing. Brown and Caldwell plans to use the services of Hydrostructures to conduct the investigative tests.

Q: Can smoke stop up the sanitary sewer?
A: No. The smoke is made up of a vaporous substance.

Q: What happens if HRSD finds a bad sewer connection or lack of traps in my home?
A: An engineer will review the investigation information and make a recommendation, which will be reviewed by HRSD staff and shared with you.

If you have other questions or concerns about smoke testing, you may call 757.460.7000 or send an email to Projects@hrsd.com.

NOTICE OF SMOKE TESTING

Smoke testing of the sanitary sewer system will take place within your neighborhood from _____ through _____; your street will be tested between _____.

This non-invasive test of the whole system does not require private property access and will usually take place Monday through Friday from 7am to 5pm.

This notice provides answers to some questions you may have about what to expect on the day of testing.

Smoke Testing FAQS

Q: What is the purpose of and how will the smoke testing be accomplished?
A: Smoke testing is used to find possible leaks in the sanitary sewer system. During this test, non-toxic, artificially created smoke (like a fog machine at a concert) is blown into access points (manholes) in the pipe. This smoke will escape through defects in the pipe, such as holes or cracks, or through illicit connections, such as roof leaders, and be visible above ground. Smoke coming from plumbing vents and manhole rims is normal. The plumes may be marked with flags, and defects will be noted. The plumes or markers may also be photographed. The fire department will be notified of smoke testing plans.

Q: Do I need to be at home during smoke testing?
A: No.

(Continue reading for homeowner tips and Frequently Asked Questions about Smoke Testing)

Q: What do I need to do to prepare for smoke testing?
When you receive notice that smoke testing will take place, you should check to see that all drain traps under sinks, toilets, washing facilities, and floor drains have water in them. To fill them, simply run each faucet for 30 – 60 seconds, flush toilets, or fill the drains with about 3 cups of water.

Q: What should I do if I have pets in the house and will not be home during smoke testing?
A: The smoke is not harmful to pets. It would be a good idea to leave several windows partially open for ventilation, should any smoke enter the building. If you have proper plumbing connections and all of the drain traps have water in them, there should not be any problems.

Q: Is the smoke harmful to humans or furnishings?
A: No. It may make you cough, but it is not harmful to your health and will not harm clothing, drapes, or furniture.

Q: What should I do if smoke gets into the house and how long will it take to dissipate?
A: If smoke enters your home during testing, please notify the contractor immediately, open windows to allow ventilation, and note the location of the smoke. Smoke inside your home can help identify bad plumbing connections or a cracked seal around a toilet. Smoke alarms may also sound. The smoke will clear within a few moments. The amount of time required will depend upon how much smoke enters the building and how much ventilation you can provide.

Q: Who will conduct these tests?
A: HRSD has retained Brown and Caldwell to manage the testing. Brown and Caldwell plans to use the services of Terra Contracting, Hydrostructures and Video Pipe Services to conduct the investigative tests.

Q: Can smoke stop up the sanitary sewer?
A: No. The smoke is made up of a vaporous substance.

Q: What happens if HRSD finds a bad sewer connection or lack of traps in my home?
A: An engineer will review the investigation information and make a recommendation, which will be reviewed by HRSD staff and shared with you.

Q: Whom do I contact if I have other questions or concerns about smoke testing?
A: You may call 757.460-7000 or send an email to Projects@hrsd.com.

A MESSAGE TO OUR NEIGHBORS
October 21, 2022

Dear Neighbor:

This letter is to introduce the bearer as an individual authorized to perform work on behalf of HRSD, your regional wastewater treatment utility.

We have retained the firm of XXX, Inc. to perform land surveys and other tasks to help us plan for a new pipeline in your neighborhood. Some of this work may require access to pipelines and other facilities residing within public easements, rights-of-way, or adjacent to your property.

If you have concerns about the presence or performance of any worker while accomplishing these duties on our behalf, you may contact me at 757-460-7000. If you wish to be present during this survey or desire to discuss this effort further, please contact the Project Manager at (757) XXX-XXXX or XXXXXX@hrsd.com.

We appreciate your understanding and assistance as we work to improve our system and fulfill HRSD's vision: *Future generations will inherit clean waterways and be able to keep them clean.*

Sincerely,

Lisa Bolen
HRSD Public Information Specialist

Commissioners: Stephen C. Rodriguez, Chair • Frederick N. Elofson, CPA, Vice-Chair • Vishnu K. Lakdawala, PhD
Michael E. Glenn • Willie Levenston, Jr. • Elizabeth A. Taraski, PhD • Nancy J. Stern • Ann W. Templeman
www.hrsd.com

P.O. BOX 5911, VIRGINIA BEACH, VIRGINIA 23471-0911 · (757) 460-7000 · FAX (757) 363-7917
www.hrsd.com

SURVEY NOTICES - Mailing and Tracking Log

Project Name:
Project Manager:
Design Engineer:

Submitted to Engineering: Name: Public Information Specialist Date:
email Phone: xxx-xxxx

Note:

Location/Map #	PARCELID	OWNER FIRST NAME	OWNER LAST NAME	PHYSICAL ADDRESS	CITY	STATE	ZIP5	POSTAL ADDRESS (mail to both)	tracking # 7010 1670 0002 2297 6XXX	Return Receipt Received	Crossing Property	Adjacent to Property
	27A-1-48	DAVIN and BEVERLY	BABB	968 BEECHLAND ROAD	ELBERON	VA	23846	ROLFE HWY	6677	Y	Y	

YELLOW Col. - info to be used in letters
Crossing Property Receives ROE Letter
Adjacent to Receive Standard Survey Letter or Surveyor carries letter in hand

Notice to Neighbors

DATE: _____

HRSD, your regional wastewater treatment utility, continues work to replace a sanitary sewer pipeline located along XX Street Name XX. HRSD has retained the firm of XX Contractor Company XX to perform this work for us.

XX Contractor Company XX will be replacing sanitary sewer laterals adjacent to your property that service your home. This work will involve excavation in the grassed area behind the curb near the cleanout for your home. **There will be a temporary interruption to your sewer services, and we ask that you refrain from heavy water usage** (such as washing clothes or using the dishwasher) **during this time (7:30 a.m. to 6 p.m.)**. This work should not affect your water service. We will attempt to notify anyone at home, by a door knock from one of our inspectors, prior to the work beginning and when the work has been completed.

Cleanouts will be marked with an orange or yellow cone the night before work is to be done. **Please leave enough room for** XX Contractor Company XX **to access the cleanout in the yard or driveway** (for instance, please park your vehicle at least 20-feet away from the marked cleanout).

THIS WORK IS TENTATIVELY SCHEDULED TO BE PERFORMED ON: _____

You can report any issues stemming from the work underway in your neighborhood by calling XX On Site Inspector XX at xxx-xxx-xxxx.

HRSD expects our contractors to work in a safe and effective manner and to be courteous in their interactions with the public. If you have any concerns about the work being accomplished in your area or in the level of customer service provided, please contact HRSD's Public Information Specialist at 757-460-7000 or Projects@hrsd.com.

We appreciate your understanding and assistance as we work to improve your sanitary sewer system so we can better protect public health and area waterways.

Commissioners: Stephen C. Rodriguez, Chair • Frederick N. Elofson, CPA, Vice-Chair • Vishnu K. Lakdawala, PhD
Michael E. Glenn • Willie Levenston, Jr. • Elizabeth A. Taraski, PhD • Nancy J. Stern • Ann W. Templeman
www.hrsd.com

WORK NOTICE
UPDATE (#)
Month Year

Sewer Rehabilitation Project: Newmarket Plaza Area

-REMINDER NOTICE-

The contractor for HRSD, your regional wastewater treatment utility, will **begin** the cleaning and inspection portion of work adjacent to your home **tomorrow**. They will be cleaning the pipes by forcing water through them.

There are some things you can do to help with the effort:

1. **Please flush all your toilets and run water down the sinks and tubs** that you have not used in the last few days.

2. **Please leave all the toilet lids DOWN** while the crew is working near your home.

You will receive a notice when this work is completed.

HRSD would like to thank all the residents for their continued understanding and patience during this important rehabilitation project fulfilling

HRSD's vision**:** ***Future generations will inherit clean waterways and are able to keep them clean.***

Should you have any questions or comments, you may contact:

HRSD Public Information Specialist:
Lisa Bolen
(757) 460-7000
lbolen@hrsd.com

HRSD's on-site Inspector:
Name
(757) XXX-XXXX
Email

WORK NOTICE
UPDATE (#)
Month Year

Public Project Name

-WORK COMPLETED-

HRSD's contractor has completed the cleaning and inspection portion of work occurring adjacent to your home.

If any additional work is required, you will be notified.

HRSD would like to thank all the residents for their continued understanding and patience during this important rehabilitation project fulfilling

HRSD's vision**:** ***Future generations will inherit clean waterways and are able to keep them clean.***

Should you have any questions or comments, you may contact:

HRSD Public Information Specialist:
Lisa Bolen
(757) 460-7000
lbolen@hrsd.com

HRSD's Onsite Inspector:
Name
(757) XXX-XXXX
Email

February 14, 2023

900 Portsmouth Blvd, LLC
555 Main Street, 14th Floor
Norfolk, VA 23510

RE: Upcoming Work in Your Neighborhood
Suffolk Pump Station Replacements

Dear 900 Portsmouth Blvd, LLC:

HRSD, your regional wastewater treatment utility, is planning a project in your neighborhood to replace the existing HRSD Pump Station, located at 1136 Saunders Drive in Suffolk, and the associated sanitary sewer pipelines that have reached the end of their useful life. Replacement of these assets will include 2 new pump stations and new sanitary sewer pipelines. This replacement project requires collecting geotechnical (soil) samples to get subsurface soil information. HRSD has retained the firm GET Solutions, Inc. to perform this work for us.

There is a need to access your property at 900 Portsmouth Boulevard to collect these soil samples by auguring small holes (6-inches in diameter) to record soil characteristics and water table elevation. These small holes will be immediately restored to like or better conditions the same day. This work should take no more than one day to complete and has been **scheduled to be performed between October 15th and November 5th, 2020.** During that time, employees from GET Solutions, Inc. will be onsite to perform this work and will have a copy of this letter in their possession at all times during these field activities.

If you have concerns about the presence or performance of any worker while accomplishing these duties on our behalf, or if you wish to discuss this effort further or to be present during this work you may contact xxPM namexx, HRSD's Project Manager at (xxx) xxx-xxx or xxxx@hrsd.com.

HRSD, a political subdivision of the Commonwealth of Virginia, was created by public referendum in 1940. Our Enabling Act (Chapter 742 of the Code of Virginia, 2012) provides us the ability to enter property pursuant to §10(j): *"The Commission is hereby authorized and empowered to enter on any lands, water or premises located within or without the District to make surveys, borings, soundings or examinations for the purposes of this act."*

We appreciate your understanding and assistance as we work to improve our sewer system and fulfill HRSD's vision: *Future generations will inherit clean waterways and be able to keep them clean.*

Sincerely,

Lisa Bolen

HRSD Public Information Specialist
757.460.7000

***please note that access to property also requires a right of entry notice from HRSD Real Estate Manager

Commissioners: Stephen C. Rodriguez, Chair • Frederick N. Elofson, CPA, Vice-Chair • Vishnu K. Lakdawala, PhD
Michael E. Glenn • Willie Levenston, Jr. • Elizabeth A. Taraski, PhD • Nancy J. Stern • Ann W. Templeman
www.hrsd.com

Unplanned Power Outage Notice

Public Project Name

-UNPLANNED POWER OUTAGE-

The contractor for HRSD, your regional wastewater treatment utility, has experienced a downed power line.

Dominion Power has been notified of the issue and is onsite to repair the issue.

To find out estimated repair times, please call 866-366-4357 or check the outage map at www.dominionenergy.com/virginia/report-outage-or-emergency

HRSD would like to apologize for any inconvenience this may have caused and thank all the residents for their continued understanding and patience during this important sewer extension project fulfilling

HRSD's vision**:** ***Future generations will inherit clean waterways and are able to keep them clean.***

Unplanned Service Interruption Notice

Public Project Name

-UNPLANNED WATER SERVICE INTERRUPTION-

The contractor for HRSD, your regional wastewater treatment utility, is experiencing an unplanned occurrence that has caused a temporary water service interruption.

Newport News Waterworks (757-926-1000) has been notified of the issue and will be working to repair the issue.

HRSD would like to apologize for any inconvenience this may have caused and thank all the residents for their continued understanding and patience during this important sewer extension project fulfilling

HRSD's vision**:** ***Future generations will inherit clean waterways and are able to keep them clean.***

Should you have any questions or comments, you may contact:

HRSD Public
Information Specialist:
Lisa Bolen
(757) 460-7000
projects@hrsd.com

Onsite Inspector
(Immediate Concerns):
Name
Number

CONSTRUCTION NOTICE
City
Month Year

Public Project Name

-Project Completion Notification-

The contractor for HRSD, your regional wastewater treatment utility, has successfully completed pipeline construction work related to the sewer pipeline replacement projects in your area. Final landscape restorations will take place in the fall when the weather is more conducive to successful plantings.

As the newly installed pipeline is now in service, HRSD will fill the old pipeline with cementitious like material and will safely leave it in place to minimize additional disruptions. The contractor may need to access a few locations along existing easements to perform this work and will coordinate with those homeowners. This work should begin this week and is anticipated to be completed within two weeks.

HRSD maintains a one-year warranty period with the contractor to review items that may need to be addressed after final restoration**.** If you have any areas of concern, please let us know so these items may be addressed through this process.

HRSD would like to thank you for your understanding and patience during this important effort to help achieve HRSD's vision:

Future generations will inherit clean waterways and are able to keep them clean.

Should you have any questions or comments, you may contact:

HRSD Public Information Specialist:
Lisa Bolen
(757) 460-7000
lbolen@hrsd.com

Media Contact:
Leila Rice, APR – 757.460.7056
Director of Communications
lrice@hrsd.com

Traffic Advisory

For Immediate Release
November 1, 2022

TEMPORARY ROAD CLOSURE FOR THRU TRAFFIC ON BAINBRIDGE AVENUE BETWEEN W. COUNTY STREET AND CAMERON STREET FOR UTILITY WORK

HAMPTON – Motorists are advised that HRSD crews will be installing sewer pipelines on Bainbridge Avenue between West County Street and Cameron Street as part of the Phoebus Area Sanitary Sewer Extension Project. During this work, motorists can follow a signed detour using West County Street, Libby Street, and Cameron Street as indicated on the map below. The detour for thru traffic is scheduled to begin as early as November 2 and is expected to remain in place for approximately 6-8 weeks.

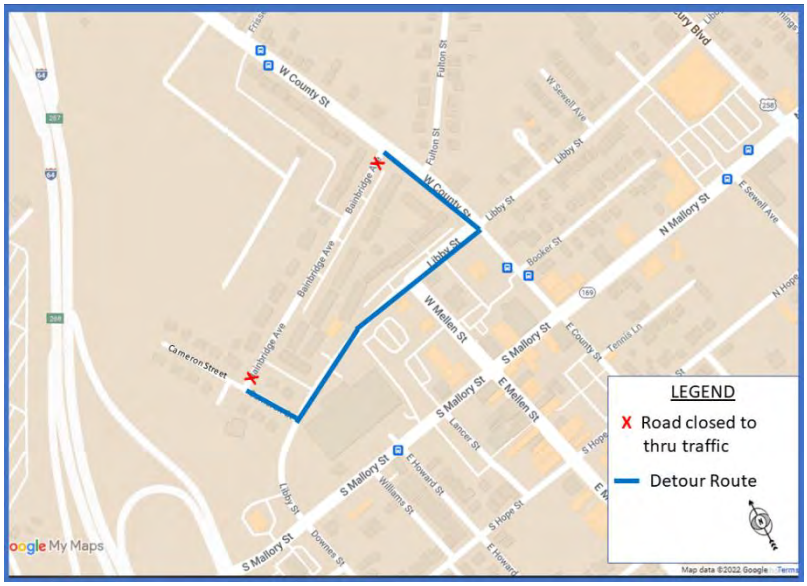

This work is weather dependent and subject to change or require additional time. Please visit the Newsroom on HRSD.com for updates and schedule changes.

HRSD's mission is to protect public health and the waters of Hampton Roads by treating wastewater effectively. A political subdivision of the Commonwealth of Virginia, HRSD was created by public referendum in 1940 and currently serves 20 cities and counties in southeast Virginia, an area with a population of 1.9 million.

###

Media Inquiries

HRSD

Leila Rice, APR
Director of Communications

Phone: 757.460.7056
Mobile: 757.642.1321
Email: lrice@hrsd.com
Website: www.hrsd.com

Project Inquiries

HRSD

Lisa Bolen
Public Information Specialist

Phone: 757.460.7000
Mobile: 757.449.2982
Email: lbolen@hrsd.com
Website: www.hrsd.com

Section 12 – Preconstruction Assessment and Damage Mitigation Procedures

A. Introduction - In past years, HRSD received complaints from private property owners, the public and locality staff regarding the condition of roads, sidewalks, drainage ditches, private property, damage to buildings, etc. within and along pipeline construction corridors and in close proximity to pumping station construction projects. For many of these construction projects, the captured preconstruction photography and/or video coverage were inadequate to resolve claims or complaints. This section provides evaluation processes and expectations for varying levels of preconstruction surveys and active construction impact monitoring during construction related to the potential of construction noise, vibration, ground settlement, building damage, water ponding, and restoration complaints. Numerous publications have been authored on the matter of construction related noise and vibration and on impacts to individuals and structures. Included in this section are excerpts from some of these publications to assist FIRM in determining the appropriate level of preconstruction survey / assessment and active construction impacts monitoring to be performed for a planned construction project for the purpose of protecting all parties. Also included in this document are template forms and documentation that are to be used by FIRM for encounters with property owners and businesses in the determined impact zone from a HRSD construction project. FIRM must obtain a waiver, in writing, from the responsible Chief of Design and Construction as well as HRSD's Real Estate Manager for any variances from the required use of this or any parts of this section of the standards.

B. Organization and outline of this Section – This section is divided into Stages that correspond with evaluations and decision points related to the various identified types of possible construction related impacts for typical HRSD projects. Figure B-1 is a decision flow chart that is included to assist in navigating this section. Every project to go through a Stage 1 discovery and review resulting in a project team discussion to determine the process forward. FIRM shall provide a detailed summary report and file it in the project's folder utilizing HRSD's UNIFIER Software. Workshops shall be facilitated by the FIRM related to Preconstruction Assessment and Damage Mitigation during the design phase of each project. The timing of these workshops is described in the following section.

For a more detailed understanding of each stage and its requirements, see the corresponding and following sections beginning with item "C" of this section of the Standards.

Following HRSD review and acceptance of 50% design development plans and prior to the 90% design development stage, the FIRM will conduct a workshop to discuss the Stage 1 (Construction Impact Research and Evaluation) report and any recommendations for further actions in the preconstruction or construction phases that are detailed in the Stage 2 and Stage 3. Attendees at this workshop will include the HRSD Project Manager, Real Estate Manager, and other key stakeholders within HRSD.

1. Stage 1 – Construction Impact Research and Evaluation
   a. Research and Investigations
      i. Soil conditions
      ii. Previous projects in the area and issues

iii. What types of sensitive structures may exist in the area (schools, churches, historical buildings, or monuments)

b. Likely Construction Means and Methods Determinations
c. Potential of Construction Related Impacts
    i. Noise Generation and Impacts
    ii. Vibrations Impacts
    iii. Dewatering Impacts on Ground and Structures Settlement (remember to consider pools and other subsurface structures)
    iv. Construction Impacts on Existing Topography, Hydrology, and Construction Travel Routes
    v. Dust, Odor, and Other Emissions beyond Construction Zone
    vi. Locality Limitations, Requirements or Ordinances (for the items above)
d. Determination of the construction zone of influence for each potential construction related impacts both perceived and actual (Provide written report clearly detailing impact distances from project site and visual diagram detailing the same).
    i. Sample – Vibration Generation and Impacts (diagram and impact table)
    ii. Sample – Noise Generation and Impacts (diagram and impact table)
    iii. Sample – Noise and Vibration Impacts (combined map)
    iv. Sample – Dewatering Impacts

Following HRSD review and acceptance of 90% design development plans and prior to the 100% design development stage, the FIRM will conduct a workshop to discuss Stage 2 (Risk Mitigation Analysis and Bid Document Development for Contractor Actions) and Stage 3 (Specific Pre-Construction Field Surveys and Construction Activity Monitoring Programs) if recommended actions are to be incorporated into the Bid Documents for the Contractor to perform, recommended actions are to be performed and/or coordinated by the FIRM during the construction phase, and any other recommended actions to be undertaken by HRSD or a third party to monitor and/or mitigate potential construction related damages to adjacent properties. Attendees at this workshop will include the HRSD Project Manager, Real Estate Manager, and other key stakeholders within HRSD.

2. Stage 2 – Risk Mitigation Analysis and Bid Document Development for Contractor Actions
    a. Noise Impacts, Restrictions, and Abatement
    b. Vibration Impacts, Abatement, and Monitoring
    c. Groundwater Dewatering Requirements
    d. Pre-Construction Surveys and Assessments within Construction Corridors and Impact Areas
    e. Fugitive Emissions Controls and Restrictions

3. Stage 3 – Specific Pre-Construction Field Surveys and Construction Activity Monitoring Programs
    a. Responsibilities of the FIRM
    b. Responsibilities of the Contractor
    c. Identification of Other Party Responsibilities

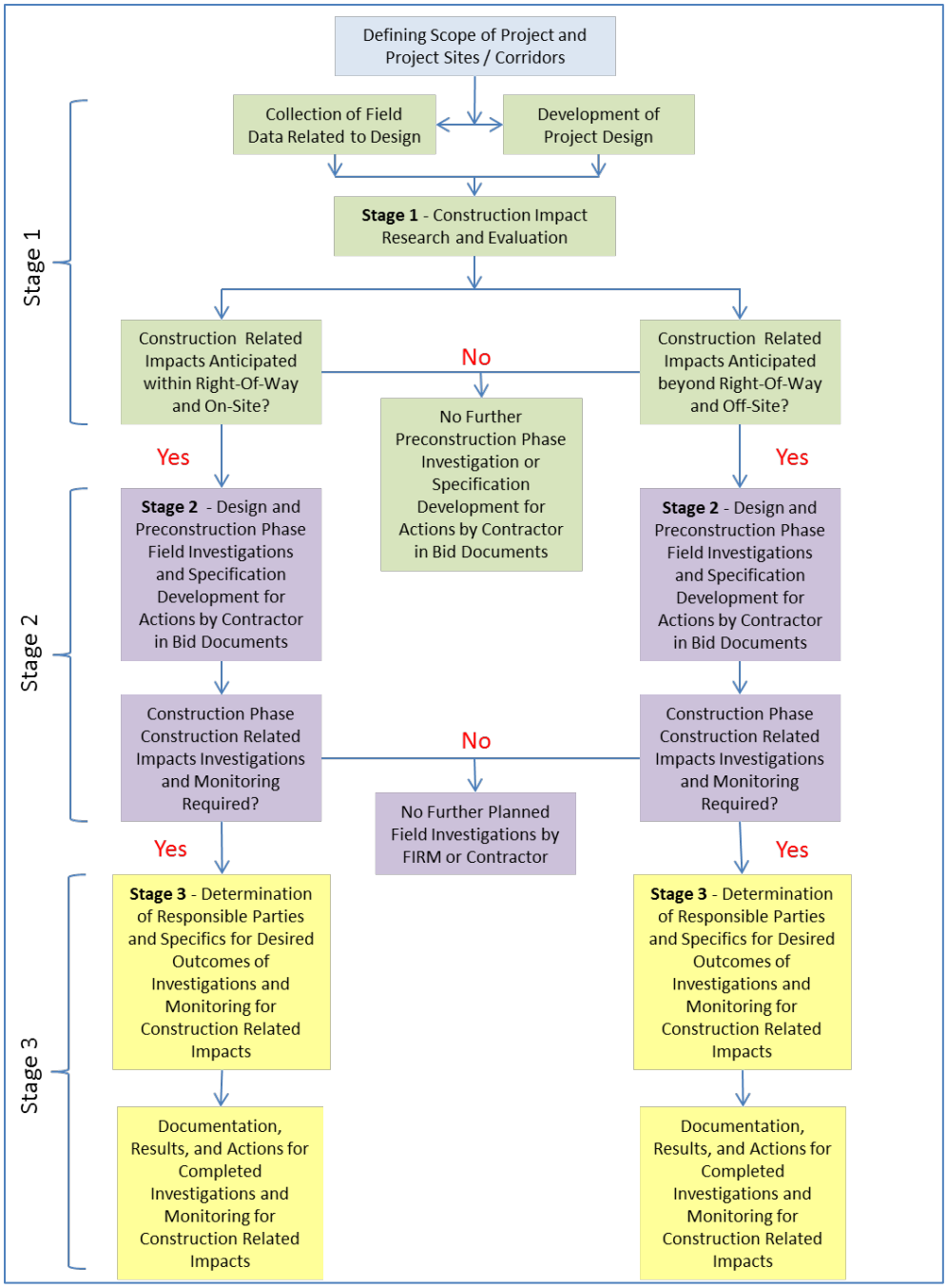

Figure B-1: Flow Chart for Preconstruction Assessment Decisions and Actions

C. Stage 1 – Construction Impact Research and Evaluation

1. The FIRM shall perform the following research and investigations during the Design phase of a project at a minimum to provide needed information for determination of possible construction related impacts to surrounding areas:
   a. Determination of the zone of influence throughout the entire project impact area.
   b. Presence of historically significant buildings, structures, and/or sites.

c. Determination of the types of buildings (residential, business, religious, education, etc.).
d. Determination of age, materials of construction, presence of basements for buildings.
e. Distance from closest point of construction to each building, structure and/or site.
f. Soil types and strata from soil borings (at recommended locations).
g. Groundwater levels and seasonal variations within the construction site or corridor.
h. Topography and hydrology and known or likely stormwater drainage issues.
i. Dust, odor, and other emissions.

2. The FIRM shall determine the following during the Design phase of a project to provide information for possible construction related impacts to surrounding areas:
   a. Ranges of depth of construction (bottom of pipe trench, pump station wet well, vault, etc.)
   b. Anticipated heavy construction equipment for specific areas (noise and vibration impacts).
   c. Construction methods and materials for trench or excavation pit stabilization and foundation support (driven temporary or permanent sheet piling, auger foundation piles, driven foundation piles).
   d. Dewatering methods and likely impacts on ground or structure settling because of dewatering in the cone of depression zone.
   e. Pavement type and thickness where construction equipment will travel upon, or equipment /materials staged upon.
   f. Determination of day verses night construction noise requirements.
   g. Determination of prevailing winds in areas of construction and fugitive emissions from the construction zone.

3. The FIRM shall evaluate the potential of construction related impacts to adjacent properties and structures based upon collected information as mentioned in the preceding paragraphs of this Section. Referenced publications and excerpts from noted publications are included in this Section to assist the FIRM in determining the potential of construction related impacts and a course of action for preconstruction assessments that suite the risks. This referenced information and these procedures are not all inclusive, and therefore the FIRM shall apply their own experience and evaluations to supplement the information in this Section to minimize risks related to construction impacts. At the conclusion of this process, the FIRM shall produce a single detailed report of the findings and FIRM's determination of construction related impacts and submit to the HRSD Project Manager (PM) and Real Estate Manager (REM).

   a. **Noise Generation and Impacts**. Noise influences from construction activities may vary depending on the duration, equipment used, sound frequencies, environmental conditions, among other factors that need to be evaluated and possibly abated depending upon the anticipated impact of noise.

      The following tables and information from the *Federal Transit Administration Office of Planning and Environment Transit Noise and Vibration Impact Assessment May 2006* publication should be reviewed by the FIRM to assess noise influences and

action plans.

12.1.1 Quantitative Noise Assessment Methods

A quantitative construction noise assessment is performed by comparing the predicted noise levels with impact criteria appropriate for the construction stage. The approach requires an appropriate descriptor, a standardized prediction method and a set of recognized criteria for assessing the impact.

The *descriptor* used for construction noise is the L_{eq}. This unit is appropriate for the following reasons:

- It can be used to describe the noise level from operation of each piece of equipment separately and is easy to combine to represent the noise level from all equipment operating during a given period.
- It can be used to describe the noise level during an entire phase.
- It can be used to describe the average noise over all phases of the construction.

The recommended *method* for predicting construction noise impact for major transit projects requires:

- An emission model to determine the noise generated by the equipment at a reference distance.
- A propagation model that shows how the noise level will vary with distance.
- A way of summing the noise of each piece of equipment at locations of

noise sensitivity. The first two components of the method are related by the

following equation:

$$L_{eq}(equip) = E.L. + 10 \log(U.F.) - 20 \log(D/50) - 10G \log(D/50)$$

where: L_{eq} *(equip)* is the L_{eq} at a receiver resulting from the operation of a single piece of equipment over a specified time period

E.L. is the noise emission level of the particular piece of equipment at the reference distance of 50 feet, taken from Table 12-1

G is a constant that accounts for topography and ground effects, taken from Figure 6-5 (Chapter 6)

D is the distance from the receiver to the piece of equipment, and

U.F. is a usage factor that accounts for the fraction of time that the equipment is in use over the specified time period.

The combination of noise from several pieces of equipment operating during the same time period is obtained from decibel addition of the Leq of each single piece of equipment found from the above equation.

General Assessment

The approach can be as detailed as necessary to characterize the construction noise by specifying the various quantities in the equation. For projects in an early assessment stage when the equipment roster and schedule are undefined, only a rough estimate of construction noise levels is practical.

The following assumptions are adequate for a general assessment of each phase of construction:

- Full power operation for a time period of one hour is assumed because most construction equipment operates continuously for periods of one hour or more at some point in the construction period. Therefore, U.F. = 1, and 10 log(U.F.) = 0.

- Free-field conditions are assumed and ground effects are ignored. Consequently, G = 0.

- Emission level at 50 feet, E.L., is taken from Table 12-1.

- All pieces of equipment are assumed to operate at the center of the project, or centerline, in the case of a guideway or highway construction project.

- The predictions include only the two noisiest pieces of equipment expected to be used in each construction phase.

Detailed Assessment

A more detailed approach can be used if warranted, such as when a large number of noise-sensitive sites are adjacent to a construction project or where contractors are faced with stringent local ordinances or heightened public concerns expressed in early outreach efforts. Additional details include:

- Duration. Long-term construction project noise impact is based on a 30-day average L_{dn}, the times of day of construction activity (nighttime noise is penalized by 10 dB in residential areas), and the percentage of time the equipment is to be used during a period of time which will affect U.F. For example, an 8-hour L_{eq} is determined by making U.F. the percentage of time each individual piece of equipment operates under full power in that period. Similarly, the 30-day average L_{dn} is determined from the U.F. expressed by the percentage of time the equipment is used during the daytime hours (7 a.m. to 10 p.m.) and nighttime (10 p.m. to 7 a.m.), separately over a 30-day period. However, to account for increased sensitivity to nighttime noise, the nighttime percentage is multiplied by 10 before performing the computation.

- Site Characteristics. Taking into account the site topography, natural and man-made barriers and ground effects will involve the factor G. Use Figure 6-5 (Chapter 6) to calculate G.

- Noise Sources. Measuring or certifying the emission level of each piece of equipment will refine E.L.

- Site Layout. Determining the location of each piece of equipment while it is working will specify the distance factor *D* more accurately.

- Combined Sources. Including all pieces of equipment in the computation of the 8-hour L_{eq} and the 30- day average L_{dn} will determine the total noise levels using Table 6-11 (Chapter 6).

12.1.2 Noise from Typical Construction Equipment and Operations

The noise levels generated by construction equipment will vary greatly depending on factors such as the type of equipment, the specific model, the operation being performed, and the condition of the equipment. The equivalent sound level (L_{eq}) of the construction activity also depends on the fraction of time that the equipment is operated over the time period of construction. The dominant source of noise from most construction equipment is the engine, usually a diesel, often without sufficient muffling. In a few cases, such as impact pile-driving or pavement-breaking, noise generated by the process dominates.

For considerations of noise assessment, construction equipment can be considered to operate in two modes, stationary and mobile. Stationary equipment operates in one location for one or more days at a time, with either a fixed power operation (pumps, generators, compressors) or a variable noise operation (pile drivers, pavement breakers). Mobile equipment moves around the construction site with power applied in cyclic fashion (bulldozers, loaders), or to and from the site (trucks). The movement around the site is handled in the construction noise prediction procedure discussed earlier in this chapter. Variation in power imposes additional complexity in characterizing the noise source level from a piece of equipment. This is handled by describing the noise at a reference distance from the equipment operating at full power and adjusting it based on the duty cycle of the activity to determine the L_{eq} of the operation. Standardized procedures for measuring the exterior noise levels for the certification of mobile and stationary construction equipment have been developed by the Society of Automotive Engineers. [1,2] Typical noise levels from representative pieces of equipment are listed in Table 12-1. These source levels can be used in FHWA's Windows-based screening tool, "Roadway Construction Noise Model" (RCNM), for the prediction of construction noise.[3]

Construction activities are characterized by variations in the power expended by equipment, with resulting variation in noise levels with time. Variation in the power is expressed in terms of the previously mentioned "usage factor" of the equipment, which is the percentage of time during the workday that the equipment is operating

at full power. Time-varying noise levels are converted to a single number (L_{eq}) for each piece of equipment during the operation. Besides having daily variations in activities, major construction projects are accomplished in several different phases. Each phase has a specific equipment mix depending on the work to be accomplished during that phase.

As a result of the equipment mix, each phase has its own noise characteristics; some have higher continuous noise levels than others, some have high impact noise levels. The purpose of the quantitative assessment is to determine not only the levels, but also the duration of the noise. The L_{eq} of each phase is determined by combining the L_{eq} contributions from each piece of equipment used in that phase. The impact and the consequent noise mitigation approaches depend on the criteria to be used in assessing impact, as discussed in the next section.

Table 12-1. Construction Equipment Noise Emission Levels

Equipment	Typical Noise Level (dBA) 50 ft from Source
Air Compressor	81
Backhoe	80
Ballast Equalizer	82
Ballast Tamper	83
Compactor	82
Concrete Mixer	85
Concrete Pump	82
Concrete Vibrator	76
Crane, Derrick	88
Crane, Mobile	83
Dozer	85
Generator	81
Grader	85
Impact Wrench	85
Jack Hammer	88
Loader	85
Paver	89
Pile-driver (Impact)	101
Pile-driver (Sonic)	96
Saw	76
Pneumatic Tool	85
Pump	76
Rail Saw	90
Rock Drill	98
Roller	74
Saw	76
Scarifier	83

Table 12-1. Construction Equipment Noise Emission Levels	
Equipment	**Typical Noise Level (dBA) 50 ft from Source**
Scraper	89
Shovel	82
Spike Driver	77
Tie Cutter	84
Tie Handler	80
Tie Inserter	85
Truck	88
Table based on an EPA Report,[4] measured data from railroad construction equipment taken during the Northeast Corridor Improvement Project, and other measured data.	

12.1.3 Construction Noise Criteria

No standardized criteria have been developed for assessing construction noise impact. Consequently, criteria must be developed on a project-specific basis unless local ordinances can be found to apply. Generally, local noise ordinances are not very useful in evaluating construction noise. They usually relate to nuisance and hours of allowed activity and sometimes specify limits in terms of maximum levels, but are generally not practical for assessing the impact of a construction project. Project construction noise criteria should take into account the existing noise environment, the absolute noise levels during construction activities, the duration of the construction, and the adjacent land use. While it is not the purpose of this manual to specify standardized criteria for construction noise impact, the following guidelines can be considered reasonable criteria for assessment. If these criteria are exceeded, there may be adverse community reaction.

General Assessment

Estimate the combined noise level in one hour from the two noisiest pieces of equipment, assuming they both operate at the same time. Then identify locations where the level exceeds the following:

Land Use	One-hour L_{eq} (dBA)	
	Day	Night
Residential	90	80
Commercial	100	100
Industrial	100	100

Detailed Assessment

Where a more refined analysis is needed, predict the noise level in terms of 8-hour L_{eq} and 30-day averaged Ldn and compare to criteria in the following table:

Land Use	8-hour L_{eq} (dBA)		L_{dn} (dBA)
	Day	Night	30-day Average
Residential	80	70	75[a]
Commercial	85	85	80[b]
Industrial	90	90	85[b]

[a] In urban areas with very high ambient noise levels (L_{dn} > 65 dB), L_{dn} from construction operations should not exceed existing ambient + 10 dB.

[b] Twenty-four-hour L_{eq}, not L_{dn}.

The following diagram provides a visual relationship between common indoor and outdoor sound generators and their accompanying decibel levels. This type of graphic can be used to compare expected construction related noise levels to more commonly experienced sounds.

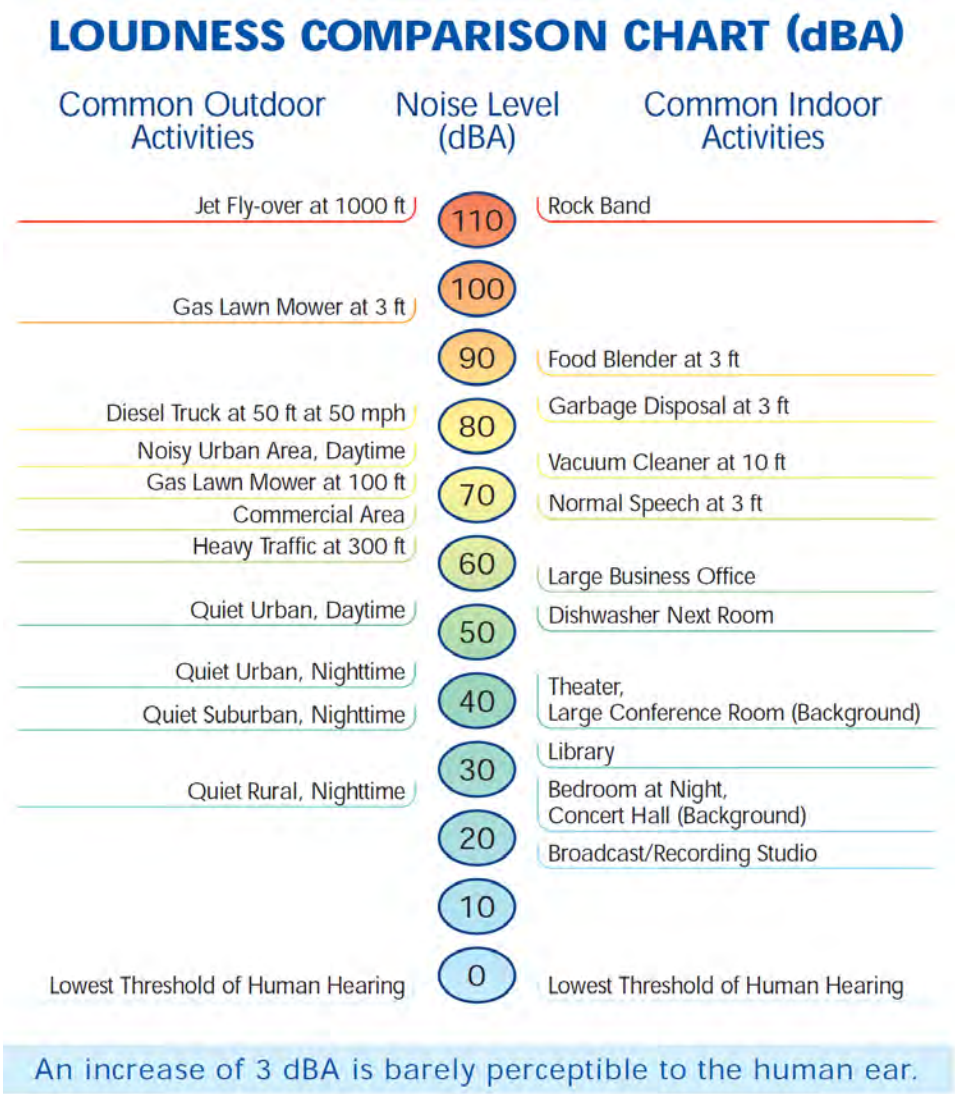

Figure C-1: Decibel Levels for Common Sound Sources

b. **Vibration Impacts**. Ground vibration impacts from construction activities may vary depending on the duration, equipment used, soil types, groundwater level, vibration frequencies, construction methods among other factors that need to be evaluated and monitored depending on the anticipated impact of vibration.

The following tables and information from the *Federal Transit Administration Office of Planning and Environment Transit Noise and Vibration Impact Assessment May 2006* publication should be reviewed by the FIRM to assess vibration impacts, create action plans, and identify the zone of influence specific to each project.

12.2 CONSTRUCTION VIBRATION ASSESSMENT

Construction activity can result in varying degrees of ground vibration, depending on the equipment and methods employed. Operation of construction equipment causes ground vibrations that spread through the ground and diminish in strength with distance. Buildings founded on the soil in the vicinity of the construction site respond to these vibrations, with varying results ranging from no perceptible effects at the lowest levels, low rumbling sounds and perceptible vibrations at moderate levels, and slight damage at the highest levels. As expressed previously in this chapter with respect to construction noise, the type of assessment – qualitative or quantitative – and the level of construction vibration analysis will be determined by factors related to the scale of the project and the sensitivity of the surrounding land use. A quantitative analysis should be conducted in cases where construction vibration may result in prolonged annoyance or building damage.

Ground vibrations from construction activities do not often reach the levels that can damage structures, but they can achieve the audible and feelable ranges in buildings very close to the site. A possible exception is the case of fragile buildings, many of them old, where special care must be taken to avoid damage. The construction vibration criteria include special consideration for such buildings. The construction activities that typically generate the most severe vibrations are blasting and impact pile driving.

In cases where prolonged annoyance or damage from construction vibrations are not expected, a qualitative assessment is appropriate. Such an assessment should include a description of the duration and the type of equipment to be used during the construction, with an explanation of how the ground- borne vibration will be maintained at an acceptable level. For example, if the equipment is of the type that generates little or no ground vibration – air compressors, light trucks, hydraulic loaders, etc. – a simple explanation is sufficient and no quantitative analysis is necessary.

12.2.1 Quantitative Construction Vibration Assessment Methods

Construction vibration should be assessed quantitatively in cases where there is significant potential for impact from construction activities. Such activities include blasting, pile-driving, vibratory compaction, demolition, and drilling or excavation in close proximity to sensitive structures. The recommended procedure for estimating vibration impact from construction activities is as follows:

Damage Assessment

- Select the equipment and associated vibration source levels at a reference distance of 25 feet from Table 12-2.
- Make the propagation adjustment according to the following formula (this formula is based on point sources with normal propagation conditions):

$$PPV_{equip} = PPV_{ref} \times (25/D)^{1.5}$$

where: PPV (equip) is the peak particle velocity in in/sec of the equipment adjusted for distance

PPV (ref) is the reference vibration level in in/sec at 25 feet from Table 12-2.

D is the distance from the equipment to the receiver.

- Apply the vibration damage criteria from Table 12-3.

Annoyance Assessment

- If desired for consideration of annoyance or interference with vibration-sensitive activities, estimate the vibration level Lv at any distance D from the following equation and apply the vibration impact criteria for General Assessment in Chapter 8 for vibration-sensitive sites:

$$L_v(D) = L_v(25\text{ ft}) - 30\log(D/25)$$

12.2.2 Vibration Source Levels from Construction Equipment

Ground-borne vibration related to human annoyance is generally related to root mean square (rms) velocity levels expressed in VdB. However, a major concern with regard to construction vibration is building damage. Consequently, construction vibration is generally assessed in terms of peak particle velocity (PPV), as defined in Chapter 7.1.2. The relationship of PPV to rms velocity is expressed in terms of the "crest factor," defined as the ratio of the PPV amplitude to the rms amplitude. Peak particle velocity is typically a factor of 1.7 to 6 times greater than rms vibration velocity.

Various types of construction equipment have been measured under a wide variety of construction activities with an average of source levels reported in terms of velocity as shown in Table 12-2. In this table, a crest factor of 4 (representing a PPV-rms difference of 12 VdB) has been used to calculate the approximate rms vibration velocity levels from the PPV values. Although the table gives one level for each piece of equipment, it should be noted that there is a considerable variation in reported ground vibration levels from construction activities. The data provide a reasonable estimate for a wide range of soil conditions.

Table 12-2. Vibration Source Levels for Construction Equipment (From measured data.[7,8,9,10])			
Equipment		**PPV at 25 ft (in/sec)**	**Approximate L_v† at 25 ft**
Pile Driver (impact)	upper range	1.518	112
	Typical	0.644	104
Pile Driver (sonic)	upper range	0.734	105
	Typical	0.170	93
Clam shovel drop (slurry wall)		0.202	94
Hydromill (slurry wall)	in soil	0.008	66
	in rock	0.017	75
Vibratory Roller		0.210	94
Hoe Ram		0.089	87
Large bulldozer		0.089	87
Caisson drilling		0.089	87
Loaded trucks		0.076	86
Jackhammer		0.035	79
Small bulldozer		0.003	58

† RMS velocity in decibels (VdB) re 1 micro-inch/second

The following diagram provides a relationship between vibration sources and likely impacts from the vibrations they generate.

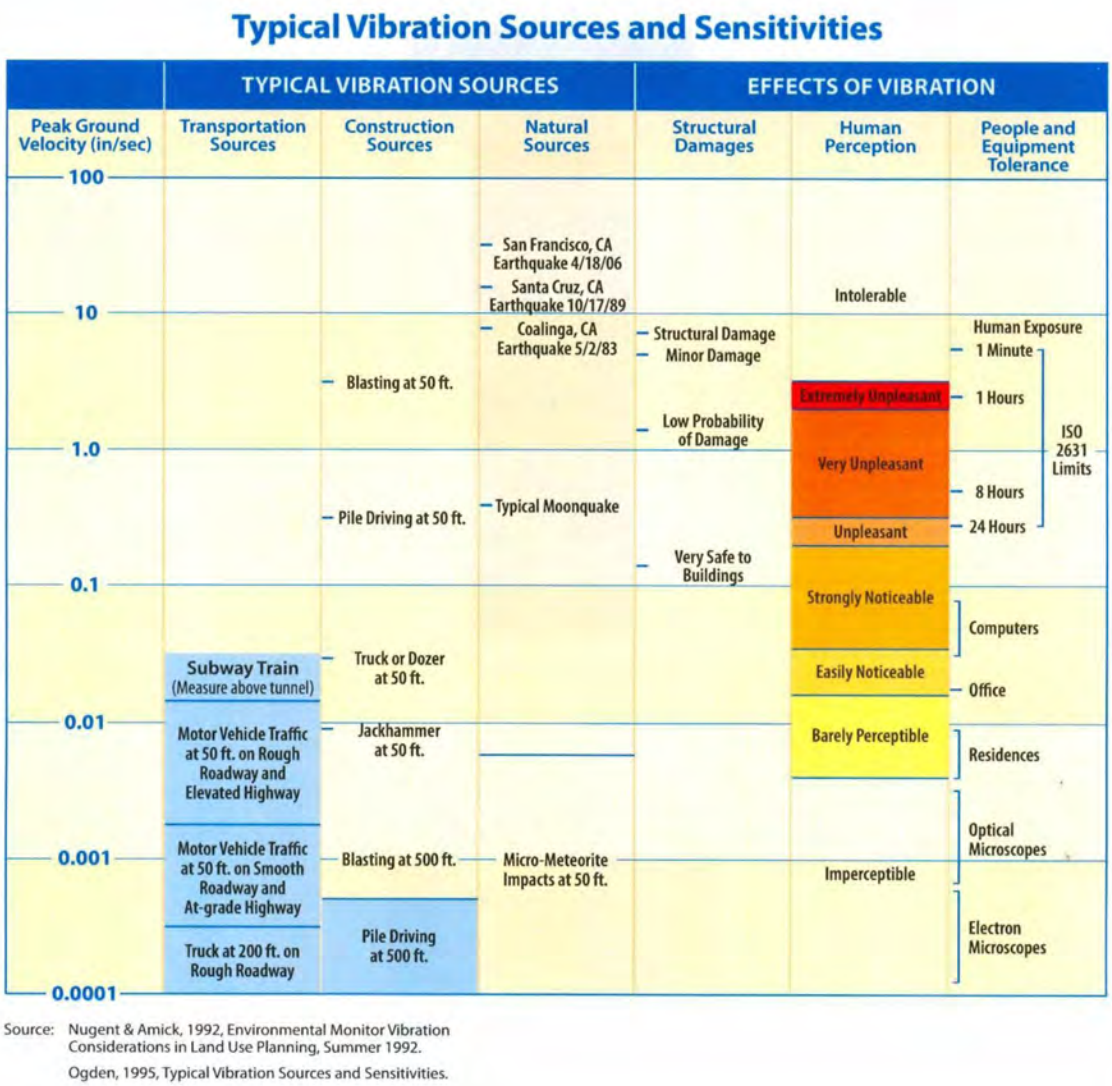

Figure C-2: Typical Vibration Sources and Sensitivities

c. **Dewatering Impacts on Ground and Structures Settlement**. Dewatering of deep construction trenches and excavation pits is a common practice for HRSD construction projects. The cone of depression for ground water removal with well point dewatering systems needs to be evaluated for possible settling impacts on ground movement, paved surfaces, buried utilities, buildings, and other structures near the construction zone. Common occurrences with groundwater dewatering are compaction of soils as water is removed resulting in soil movement and removal of fine soil particles along with the groundwater resulting in voids in the soil. The FIRM is to evaluate settlement abatement methods and materials, create action plans and

identify the zone of influence specific to each project.

This following figure shows the results of groundwater modeling for a calculated withdrawal rate.

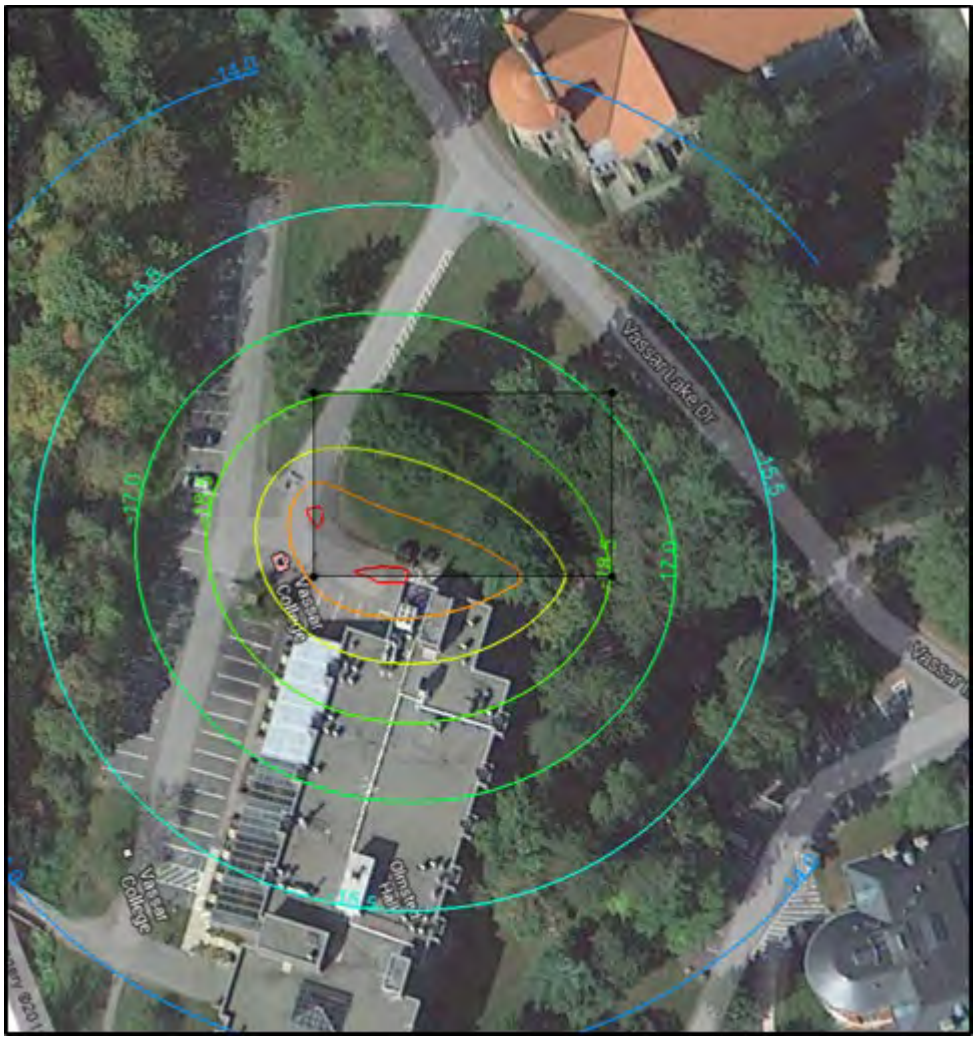

Figure C-3: Example of Impact Zone and Groundwater Elevations during Withdrawal

d. **Construction Impacts on Existing Topography, Hard Surfaces, Hydrology, and Construction Travel Routes.** The FIRM to document existing conditions and evaluate likely impacts on stormwater drainage, unpaved surfaces, paved surface, concrete driveways / sidewalks, vegetation / plantings from construction equipment and material storage within the construction zones. Consideration to be given to preventative and protective measures as practical to be incorporated into the construction Bid Documents. The FIRM to consider how the Contractor(s) will deliver materials to the construction area and storage sites and movement of construction equipment across paved and unpaved surfaces. The FIRM shall create

action plans and identify the zone of influence specific to each project.

e. **Dust, Odor, and Other Emissions beyond Construction Zone.** Construction projects have the potential to generate numerous type and quantities of fugitive emissions. Some examples of emission generating activities include site clearing; excavation and earthwork; stockpiles and storage mounds; demolition activities; spray painting; power washing; operating equipment exhausts, and site vehicular entrances and exits. The FIRM is to consider the types of construction equipment and activities within the construction zone and the potential of fugitive emissions from these sources and nuisance of these emissions. Determination of prevailing wind direction and proximity of buildings and/or sensitive receptors are to be made by the FIRM as part of this evaluation. Upon completion of these evaluations, if nuisance emissions are considered likely beyond the construction zone, then further investigations and abatement efforts are warranted. The FIRM shall create action plans and identify the zone of influence specific to each project.

D. Stage 2 – Risk Mitigation Analysis and Bid Document Development for Contractor Actions.

1. Based upon the risk assessment of noise impacts emanating beyond the limits of the construction zone, the FIRM needs to take appropriate steps to mitigate these potential impacts. The following information from the *Federal Transit Administration Office of Planning and Environment Transit Noise and Vibration Impact Assessment May 2006* publication should be reviewed by the FIRM to mitigate noise influences and other action plans as recommended.

12.1.4 Mitigation of Construction Noise

After using the above approaches to locate potential impacts from construction noise, the next step is to identify appropriate control measures. Three categories of noise control approaches, with examples, are given below:

1. *Design considerations and project layout:*

   - Construct noise barriers, such as temporary walls or piles of excavated material, between noisy activities and noise-sensitive receivers.
   - Re-route truck traffic away from residential streets, if possible. Select streets with fewest homes if no alternatives are available.
   - Site equipment on the construction lot as far away from noise-sensitive sites as possible.
   - Construct walled enclosures around especially noisy activities or clusters of noisy equipment. For example, shields can be used around pavement breakers and loaded vinyl curtains can be draped under elevated structures.

2. *Sequence of operations:*

- Combine noisy operations to occur in the same time period. The total noise level produced will not be significantly greater than the level produced if the operations were performed separately.
- Avoid nighttime activities. Sensitivity to noise increases during the nighttime hours in residential neighborhoods.

3. *Alternative construction methods:*

- Avoid use of an impact pile driver where possible in noise-sensitive areas. Drilled piles or the use of a sonic or vibratory pile driver are quieter alternatives where the geological conditions permit their use.
- Use specially-quieted equipment, such as quieted and enclosed air compressors and properly- working mufflers on all engines.
- Select quieter demolition methods, where possible. For example, sawing bridge decks into sections that can be loaded onto trucks results in lower cumulative noise levels than impact demolition by pavement breakers.

If possible, the environmental impact assessment should include descriptions of how each impacted location will be treated with one or more mitigation measures. However, with a large, complex project, the information available during the preliminary engineering phase may not allow final decisions to be made on all specific mitigation measures. In such cases, it is appropriate to describe and commit to a mitigation plan that will be developed during final design. The objective of the plan should be to minimize construction noise using all reasonable (i.e., cost vs. benefit) and feasible (i.e., physically achievable) means available. Components of the plan may include some or all of the following provisions which would be specified in construction contracts:

- *Equipment noise emission limits*. These are absolute noise limits applied to generic classes of equipment at a reference distance (typically 50 feet). The limits should be set no higher than what is reasonably achievable for well-maintained equipment with effective mufflers. Lower limits that require source noise control may be appropriate for certain equipment when needed to minimize community noise impact, if reasonable and feasible. Provisions could also be included to require equipment noise certification testing prior to use on site.
- *Lot-line construction noise limits*. These are noise limits that apply at the lot line of specific noise- sensitive properties. The limits are typically specified in terms of both noise exposure (usually Leq over a 20-30 minute period) and maximum noise level. They should be based on local noise ordinances, if applicable, as well as pre-construction baseline noise levels; limits that are 3-5 decibels above the baseline are often used.
- *Operational and/or equipment restrictions*. It may be necessary to prohibit or restrict certain construction equipment and activities near residential areas during nighttime

hours. This is particularly true for activities that generate tonal, impulsive or repetitive sounds, such as back-up alarms, hoe ram demolition and pile driving.

- *Noise abatement requirements*. In some cases specifications may be provided for particular noise control treatments, based on the results of the design analysis and/or prior commitments made to the public by civic authorities. An example would be the requirement for a temporary noise barrier to shield a particular community area from noisy construction activities.

- *Noise monitoring plan requirements*. Plans can be developed for pre-project noise monitoring to establish baseline noise levels at sensitive locations, as well as for periodic equipment and lot-line noise monitoring during the construction period. The plan should outline the measurement and reporting methods that will be used to demonstrate compliance with the project noise limits.
- *Noise control plan requirements*. For major construction projects, specifications have required the preparation and submission of noise control plans on a periodic basis (e.g., every six months). These plans should predict the construction noise at noise-sensitive receptor locations based on the proposed construction equipment and methods. If the analysis predicts that the specified noise limits will be exceeded, the plan should specify the mitigation measures that will be applied and should demonstrate the expected noise reductions these measures will achieve. The objective of this proactive approach is to minimize the likelihood of community noise complaints by ensuring that any necessary mitigation measures are included in the construction plans.
- *Compliance enforcement program*. If construction noise is a significant issue in the community, it is important that a program be put in place to monitor contractor compliance with the noise control specifications and mitigation plan. It is best that this function be performed by a construction management team on behalf of the public agency.
- *Public information and complaint response procedures*. To maintain positive community relations, the public should be kept informed about the construction plans and efforts to minimize noise, and procedures should be established for prompt response and corrective action with regard to noise complaints during construction.

Most of these provisions are appropriate for very large projects where construction activity will continue for many months, if not years. References 4 and 5 contain details on dealing with construction noise on major transportation projects.[5,6]

2. Based upon the risk assessment of vibration impacts emanating beyond the limits of the construction zone, the FIRM needs to take appropriate steps to mitigate these potential impacts. The following information from the *Federal Transit Administration Office of Planning and Environment Transit Noise and Vibration Impact Assessment May 2006* publication should be reviewed by the FIRM to mitigate vibration influences and other action plans as recommended. The FIRM is to collaborate with HRSD to identify and determine the level of preconstruction surveys of properties, buildings, and structures

with the potential to be impacted by construction vibrations.

12.2.3 Construction Vibration Mitigation

After using the above methods to locate potential human impacts or building damage from construction vibrations, the next step is to identify control measures. Similar to the approach for construction noise, mitigation of construction vibration requires consideration of equipment location and processes, as follows:

1. *Design considerations and project layout:*
   - Route heavily-loaded trucks away from residential streets, if possible. Select streets with fewest homes if no alternatives are available.
   - Operate earth-moving equipment on the construction lot as far away from vibration-sensitive sites as possible.
2. *Sequence of operations:*
   - Phase demolition, earth-moving and ground-impacting operations so as not to occur in the same time period. Unlike noise, the total vibration level produced could be significantly less when each vibration source operates separately.
   - Avoid nighttime activities. People are more aware of vibration in their homes during the nighttime hours.
3. *Alternative construction methods:*
   - Avoid impact pile driving where possible in vibration-sensitive areas. Drilled piles or the use of a sonic or vibratory pile driver causes lower vibration levels where the geological conditions permit their use (however, see cautionary note below).
   - Select demolition methods not involving impact, where possible. For example, sawing bridge decks into sections that can be loaded onto trucks results in lower vibration levels than impact demolition by pavement breakers, and milling generates lower vibration levels than excavation using clam shell or chisel drops.
   - Avoid vibratory rollers and packers near sensitive areas.

Pile-driving is one of the greatest sources of vibration associated with equipment used during construction of a project. The source levels in Table 12-2 indicate that sonic pile drivers may provide substantial reduction of vibration levels. However, there are some additional vibration effects of sonic pile drivers that may limit their use in sensitive locations. A sonic pile driver operates by continuously shaking the pile at a fixed frequency, literally vibrating it into the ground. Vibratory pile drivers operate on the same principle, but at a different frequency. However, continuous operation at a fixed frequency may be more noticeable to nearby residents, even at lower vibration levels. Furthermore, the steady-state excitation of the ground may induce a growth in the resonant response of building components. Resonant response may be unacceptable in cases of fragile buildings or

vibration-sensitive manufacturing processes. Impact pile drivers, on the other hand, produce a high vibration level for a short time (0.2 seconds) with sufficient time between impacts to allow any resonant response to decay.

As with construction noise, in many cases the information available during the preliminary engineering phase will not be sufficient to define specific construction vibration mitigation measures. In such cases, it is appropriate to describe and commit to a mitigation plan that will be developed and implemented during the final design and construction phases of the project. The objective of the plan should be to minimize construction vibration damage using all reasonable and feasible means available. The plan should provide a procedure for establishing threshold and limiting vibration values for potentially affected structures based on an assessment of each structure's ability to withstand the loads and displacements due to construction vibrations. The plan should also include the development of a vibration monitoring plan during final design and the implementation of a compliance monitoring program during construction.

3. Based upon the risk assessment of dewatering impacts emanating beyond the limits of the construction zone, the FIRM to take appropriate steps to mitigate these potential impacts. The FIRM to collaborate with HRSD to identify and determine the level of preconstruction surveys of properties, buildings, and structures with the potential to be impacted by construction dewatering.

4. Based upon the risk assessment of construction impacts to existing drainage, loss of trees / vegetation, damage to locality and/or private roads, the FIRM to take appropriate steps to mitigate these potential impacts and incorporate appropriate requirements for the Contractor within the Bid Documents. The FIRM to collaborate with HRSD to identify and determine the level of preconstruction surveys within and outside of the construction zone.

5. Based upon the risk assessment of dust, odor and other fugitive emissions emanating beyond the limits of the construction zone, the FIRM to take appropriate steps to mitigate these potential impacts and incorporate appropriate requirements for the Contractor within the Bid Documents.

E. Stage 3 – Specific Pre-Construction Field Surveys and Construction Activity Monitoring Programs

1. General Discussion – The following paragraphs detail communication, documentation, responsible parties, and action plans for site specific pre-construction condition assessments for public and private property and facilities, and construction activity monitoring in areas where a level of damage or nuisance is possible. These efforts are intended to follow best practices for protecting all parties from damage and nuisance related claims and occurrences. HRSD has developed templates and examples of various forms and recording logs that are included in this publication of *HRSD Design and*

Construction Standards.

2. The FIRM shall perform the following services during the Pre-Construction Phase for all pipelines, pump stations, storage tanks, and similar projects. This effort is divided into two parts with the first part held in coordination with the Contractor and the second part conducted independently from the Contractor.

   a. Part 1 - Conduct a pre-construction condition assessment, with the Contractor's staff in attendance, after award of the construction contract and prior to any work beginning, to document the existing conditions of areas to be impacted by the work and adjacent areas which could be potentially impacted by the work. The purpose of this assessment is to provide a baseline condition on all properties documenting existing conditions prior to any construction services taking place. This effort should document the existing conditions of but not limited to: right of ways, utilities, storm drains and inlets, manholes, fire hydrants, telephone, power and light poles, medians, signage, pavement, curb and gutter, sidewalks, drainage, driveways and aprons, mailboxes, landscaping, adjacent structures, residences, commercial and industrial property and other areas to be used by the Contractor along the project alignment or in close proximity to the construction activities, within the zone of influence and any structure identified to be of significant importance (such as historical registry). Document the exterior and interior (if possible) of residences, commercial and industrial properties after obtaining the signed approval of the owner or owner's authorized agent for the property. Documentation should include detailed and identifiable video of all areas and structures within the areas identified above. Digital images of both areas in which existing deficiencies are observed and areas in fair condition shall be documented. The documentation shall also provide detailed comments to describe the location / area documented (i.e. 1st floor, living room, right wall) and any observations (i.e. step crack 4mm width and 36-inch length). Review of past surveys will be coordinated with HRSD's REM for format information upon request (a small sample is included in the attachment portion of this section. Review the limits of the proposed pre-construction survey with HRSD's PM and REM prior to beginning these assessments. The FIRM shall coordinate the assessments with all parties ensuring they are completed 30 days prior to the Contractor entering the site. The FIRM shall provide a copy of this documentation to HRSD's PM and REM within one week of completing the field assessments for review and approval. Once approved, the FIRM will forward a copy to the Contractor for their use.

   b. Part 2 – Conduct a post rain event field reconnaissance as soon after the event as practically feasible. At a minimum, take photographs at each roadway intersection, all driveways, and a minimum of two pictures at the front of each property. Photograph all standing water areas within the construction limits. Digital photographs are to be labeled with the time and date taken. Photographs are also to be referenced to the construction plans to highlight the location and angle taken. Furnish digital images to the HRSD PM for review and approval. Capture video recordings along the construction limits including roadway intersections, all driveways and each property. Recorded audio on the video tracks shall call out highlighted observances either by

property number of construction stationing. Furnish a DVD to the HRSD PM for review and approval.

3. The following are specific procedures associated with pre-construction condition assessment of private property buildings and facilities if warranted based upon the risk assessment.
   a. The FIRM to incorporate into the Contract Documents the requirements and specifics of the pre-construction existing conditions assessment program for designated structures and locations.
   b. Maintain the HRSD Approved Pre-Construction Conditions Assessment Communications and Contact Tracking Log, using HRSD's template to include each verified property owner and address contacted, method of contact, and number of contact attempts with dates to gain access permission. Three (3) certified return receipt attempts for each property are the minimum standard.
   c. Use HRSD's Approved Assessment of Pre-Existing Conditions Request Letters to gain permission to enter the property for this assessment.
      i. Letter to Business - Template
         i. To include Right to Access Property Form - Template
      ii. Letter to Private Property (residential) – Template
         i. To include Right to Access Property Form - Template
   d. Use HRSD's Right to Access Property form, have this document signed by the property owner or verifiable authorized agent, and provide a copy to property owner for their records prior to entering private property.
   e. Provide video, still photographs and describe the particulars of each noted crack or defect. Included in the description should be the length and width of each crack.
      i. Photographs and videos should be taken with a high pixel camera with "Exchange Image File Format" (EXIF) the date stamp should be present on all files.
      ii. A ruler or other measurement device should be included in the photograph and video next to the observed crack or defect.
      iii. Log the conditions using the HRSD approved Pre-Existing Condition Assessment – Report On-Site Form and gaining a signature from the property owner after completion.
   f. Document via a sketch of each room of the building interior and/or exterior where a crack or defect is observed.
   g. FIRM shall prepare an overall summary report of each property visited and provide to HRSD's REM for review. This process shall be completed and reviewed prior to the contractor entering the work site.
      *Note – all documentation sent out to the public shall be approved by HRSD Communications Department prior to distribution or use. Coordinate this effort with both the Public Information Specialist and the REM.

4. The following are specific procedures associated with a vibration monitoring program if warranted based upon risk assessment.

a. The FIRM to incorporate into the Contract Documents the technical requirements and specifics of a vibration monitoring program at designated locations.
b. Specify peak particle velocity (PPV) thresholds for the individual structures to be monitored.
c. Specify the calibration requirements for vibration monitors.
d. Specify experience and qualification requirements for technician and firm performing the vibration monitoring program.
e. Evaluate the use vibration monitors in tandem, placed a designated distance apart, for properties to be monitored.
f. Verify vibration monitors are properly installed at the correct locations.
g. Evaluate and specify amount of memory needed for each vibration monitor to capture data in the monitoring log for the date ranges required.
h. Specify locations throughout the project extents for a vibration monitoring program.
i. Based upon observations of cracks in buildings where pre-construction surveys were performed, evaluate, and recommend a monitoring program for changes to these benchmark cracks during the construction period.
j. Produce a document intended for educational use with the public, detailing the zone of influence, distance attenuation of ground vibrations and how it was determined, the levels of vibration (maximum peak velocity) recorded during the project and examples of what those levels equate to for the public. This document could be used throughout the life of the project when discussing claims and concerns with property owners.

5. The following example of "Special Provision Language for Vibration Control and Monitoring" was found through Internet search (no accompanying Ownership reference available) and included in this section to provide insight for establishing various responsibilities and accountabilities for a construction related vibration program. The FIRM is to collaborate with HRSD to establish a vibration control and monitoring program specific to the construction project need.

Sample Program

Special Provision Language for Vibration Control and Monitoring

Vibration producing activities (such as blasting, pile driving, vibratory compaction, pavement breaking or operation of heavy construction equipment) are common in construction projects. Four levels of vibration control can be provided on a project, depending on things such as structure susceptibility to damage, proximity to vibration producing activities, local concerns, or district policy. The "levels" are defined as follows:

Level 1 - No specific mention in contract of possible problems or controls. This is most common for minor or small quantities of pavement breaking or pile driving, when they are not in proximity to occupied structures or sensitive receptors.

Level 2 - Alert contractor to possible problems by brief description in the special provisions.

Vibration levels and monitoring are at the discretion of the contractor, and the contractor is responsible for all damage caused by his activities.

Level 3 - Detail concerns and require the contractor to do a prescribed condition survey and to employ a qualified vibration specialist to establish a safe vibration level and monitor the vibrations. As an alternative, a vibration level may be set by the Owner. It may also be appropriate to use experienced based vibration criteria. The contractor is still responsible for any problems.

Level 4 - Owner takes lead role and has consultant(s) do a damage susceptibility study to establish vibration control limits, and a preconstruction condition survey for each structure. The Owner also takes responsibility for vibration monitoring during construction to ensure compliance with vibration control limits. At this level, the Owner assumes some responsibility for damage to structures if the established vibration limits are not exceeded by the contractor. The degree of responsibility depends on the vibration specification - most vibration specifications are aimed at avoiding structural damage, leaving the contractor responsible for any cosmetic damage (e.g. plaster cracks, broken windows, etc.) and keeping residents/occupants informed and "happy".

Examples of Level 2 through Level 4 specifications are given below. Each of these was produced for a specific project and need to be personalized or fine-tuned for other projects. There may be levels between those shown, but care must be taken to keep the specifications consistent, for example, it would be inconsistent to expect the contractor to take total responsibility for vibrations and then put a vibration specification in the contract.

Level 2

S- CONSTRUCTION VIBRATIONS

Vibration producing activities (such as blasting, pile driving, vibratory compaction, pavement breaking or operation of heavy construction equipment) may be required for construction of this project. The Contractor is advised that structures are located close to the proposed work and that construction activities shall be conducted so as to preclude damage to these structures and undue annoyance to occupants. The Contractor shall be responsible for all damage caused by his activities.

Level 3

S- CONSTRUCTION CONTROLS AND MONITORING

Vibration producing activities (such as blasting, pile driving, vibratory compaction, pavement breaking, or operation of heavy construction equipment may be required for construction of this project. The Contractor is advised that structures are located close to the proposed work and that construction activities shall be conducted to preclude damage to same. The Contractor shall be responsible for any damage caused by his activities.

At least 30 days prior to start of such work, the Contractor shall provide a_____plan (blasting, pile driving, etc.) plan to the Engineer, which shall include, but not be limited to the

following: proposed construction method(s), vibration monitoring plans (including the format for reporting the vibration readings), anticipated vibration levels at the closest building(s), condition survey format, and public relations activities. A copy of all reports shall be provided to the Engineer.

S- .1 Condition Survey

A preconstruction building Condition Survey shall be conducted by the Contractor on the___ building(s), prior to the commencement of any vibration producing activity. (In lieu of naming the buildings, a radius of ___ ft from the vibration producing activity can be used – this distance can be adjusted based on the type of activity and the sensitivity of the receptors.)

The survey will include documentation of interior sub-grade and above grade accessible walls, ceilings, floors, roof, and visible exterior as viewed from the grade level. It will detail (by engineering sketches, video tape, photographs, and/or notes) any existing structural, cosmetic, plumbing, or electrical damage. The survey will be conducted by a Professional Engineer, registered in the State of Virginia.

A report shall be issued that will summarize the pre-construction condition of the building(s) and will identify areas of concern, including potential personnel hazards (falling debris) and structural elements that may require support or repair.

Crack displacement monitoring gages will be installed as appropriate across any significant existing cracks to help verify any additional building distress if it should develop. The appropriate location, number, and type of gages will be established by the Contractor and/or the Project Engineer. The gages will be read prior to vibration producing activities, as well as during these activities. Data shall be obtained on a weekly basis for as long as vibration-producing activities are being conducted. A report shall be submitted which summarizes the data. The Engineer shall be alerted if any significant movement is detected by the monitoring gages.

S- .2 Vibration Controls
(Sound level limits should also be included for blasting projects)

The Contractor shall employ a qualified vibration specialist to establish a safe vibration level for the building(s). This specialist shall also supervise the Contractors vibration-monitoring program. During all vibration producing activities, the Contractor shall monitor vibration levels at ____ building(s) and shall not exceed the safe level established to preclude damage to this structure(s).

The vibration monitoring equipment shall be capable of continuously recording the peak particle velocity and providing a permanent record of the entire vibration event. Copies of all vibration records and associated construction activity (blasting, pile driving, pavement breaking, etc.) data shall be provided to the Engineer in a format approved by the Engineer.

S- .3 Public Relations

The Contractor shall maintain a complaint log and make this available to the Engineer on request. Occupants/owners of adjacent buildings shall be notified by the Contractor at least 2 weeks prior to commencement of any vibration producing activity that might affect the

structure or inhabitants.

Level 4

S- VIBRATION MONITORING AND CONTROL

The following provisions do not relieve the Contractor of any responsibility for damage caused by his operations, nor do they relieve the Contractor from compliance with all applicable federal, state, county, and city codes relative to the use and storage of explosives. If a conflict occurs between this specification and other codes, it shall be resolved by the Engineer.

S- .1 Susceptibility Study

A detailed document titled_____, has been prepared for Owner by (Name of consulting firm), and a copy of this report is available for inspection at _____ (address & contact). This report includes an evaluation of buildings and structures in proximity to the project and an evaluation of their susceptibility to construction vibration damage. The vibration criteria for this project is based on this study.

S- .2 Condition Survey

A condition survey will be (or has been) performed for buildings in proximity to the project. This survey will document the existing exterior and interior conditions of these buildings.

The survey will include documentation of interior sub-grade and above grade accessible walls, ceilings, floors, roof, and visible exterior as viewed from the grade level. It will detail (by engineering sketches, video tape, photographs, and/or notes) the existing structural, cosmetic, plumbing, and electrical damage, but will not necessarily be limited to areas in buildings showing existing damage.

Crack displacement monitoring gages will be installed as appropriate across any significant existing cracks to help verify any additional building distress, should it develop. The gages will be read prior to commencement of vibration producing activities, as well as during these activities. Results of this monitoring will be made available to the Contractor.

S- .3 Ground Vibration Controls

The following vibration control limits are applicable for all construction work, including but not limited to blasting, pile driving, compaction, ripping, and hauling activities.

The Contractor is advised that the ground vibration control limits defined herein may restrict his construction practices, and that he should consider these limitations in preparing his bid.

If the Contractor exceeds 80% of the ground vibration limit as given below, for any construction activity, he shall cease that activity and submit a report. The report shall give the construction parameter data and include a proposal for corrective action necessary to ensure that the specified limit is not exceeded for future activities. This report shall be submitted to the Engineer, and his permission must be obtained prior to the continuation, or beginning of any future vibration producing construction activities.

If the Contractor exceeds the ground vibration limit for any construction activity, the Engineer will

direct that all activities related to those causing the vibration to be stopped. The Contractor shall submit to the Engineer a report giving the construction parameter data and include the proposed corrective action for future construction events. To proceed with any further vibration producing activities, written permission must be obtained from the Engineer.

A. Definitions

The following definitions shall apply to the vibration controls:

Peak particle displacement - the peak particle displacement is the maximum movement induced by the vibration. The displacement amplitudes are in units of mils (0.001 inch) zero to peak amplitude.

Peak particle velocity - The peak particle velocity is the maximum rate of change with respect to time of the particle displacement. The velocity amplitudes are in units of inches per second (ips), zero to peak amplitude.

Frequency - The frequency of the vibration is the number of oscillations which occur in one second. The frequency units are given in Hertz (Hz) where one Hz equals one cycle per second.

B. Ground vibration control limit
(Sound level limits should also be included for blasting projects)

The ground vibration controls are applicable to external locations adjacent to affected buildings or structures. The maximum single component peak particle velocity resulting from construction activity shall not exceed__.

S- .4 Instrumentation

The Contractor shall furnish, maintain, and operate three vibration monitors (amplitude and frequency sensitive) during any vibration producing activities that could, in the judgment of the Engineer, produce measurable ground vibrations. If the Contractor chooses to have concurrent vibration producing activities at more than one location on the construction site, he shall notify the Engineer in writing at least two weeks prior to the commencement of such activities. The Engineer may require additional vibration monitoring instruments at each location depending on site parameters.

No vibration producing activities may be started until the appropriate instrumentation is provided by the Contractor and approved by the Engineer.

All vibration instruments shall be powered with rechargeable batteries, and the Contractor shall supply extension geophone and microphone cables so that the instruments can be placed within structures if outside temperatures drop below 32 degrees Fahrenheit.

All vibration instruments shall be supplied with current calibration documents and shall be recalibrated on approximately a six-month use interval. At a minimum, instrument specific calibration curves of peak particle velocity input to peak particle velocity output shall be provided over the specified frequency ranges at both 0.5 and 1.0 ips for each instrument.

The Contractor shall be responsible for instrument maintenance. If the Contractor does not maintain a sufficient number of instruments to monitor the buildings/structures adjacent to the vibration producing activity, the Engineer may direct that all vibration activities cease until a sufficient number are working. Recording tape shall be supplied by the Contractor and at least a two-week supply maintained.

The Contractor shall designate an individual in his organization or under contract to him, who will be responsible for instrument coordination. The Contractor will be responsible for placing the instruments at measuring locations designated by the Engineer and reading and recording the pertinent vibration event data. The Contractor will report the data to the Engineer at the completion of each vibration event.

The amplitude/frequency vibration monitor shall be an Instantel Blastemate II, or equivalent. This instrument shall be capable of measuring, recording and producing a hard copy of the frequency and peak particle velocity in three mutually perpendicular axes. ("Vector sum" instruments are not acceptable). This instrument shall be capable of measuring Linear Scale (dB-L) sound levels.

S- .5 Public Relations

The Contractor is required to have both letter and personal contact with residents and owners or operators of the buildings that are adjacent to the construction area or near enough to it for ground vibrations from construction operations to affect the personal property, displays or merchandise of these buildings. This contact will be made prior to the beginning of any vibration producing activity. The Contractor will furnish a list of those contacted to the Engineer.

As described elsewhere in these provisions, the ground vibration resulting from construction work will be monitored by the Contractor. The Contractor will measure the magnitude of each vibration event with at least two vibration instruments, generally located adjacent to the closest or most critical structures.

S- .6 Record Keeping

The Contractor shall maintain a log of all vibration-producing activities at which ground vibrations were measured. The log shall include the maximum peak particle velocity and its associated frequency, type and location of the vibration producing event, location of the geophones and closest distance from the vibration-producing event to the geophone(s). When vibration-producing activities are in progress, the Contractor shall submit daily reports to the Engineer which include all the vibration log data from that day. These reports shall be submitted at the end of each day, and no further vibration producing activity will be allowed until such reports are received by the Engineer.

The Contractor shall be responsible for removing all vibration records produced by the vibration instruments and attaching them to the corresponding Blast Log for submittal to the Engineer as part of the daily report.

The Contractor shall maintain a complaint log of all vibration related complaints, contacts, and actions, and shall furnish copies to the Engineer on request.

Researched Publications

- *Federal Transit Administration Office of Planning and Environment Transit Noise and Vibration Impact Assessment May 2006*

- *New Hampshire DOT Research Record Ground Vibrations Emanating from Construction Equipment*

- *Construction Vibration and Historic Buildings*, prepared for Bureau of Environment Division of Transportation Infrastructure Development, prepared by CTC & Associates LLC, WisDOT RD&T Program (July 8, 2003)

- *Construction Vibration Damage Guide (CVDG) Professional Edition*, John M. Zeigler

Attachments

1. Attachment A: Sample – Vibration Generation and Impacts (diagram and impact table) / Noise and Vibration Impacts (combined map)
2. Attachment B: Sample – Noise Generation and Impacts (diagram and impact table)
3. Attachment C: Sample – Dewatering Impacts
4. Attachment D: Pre-Construction Conditions Assessment Communications and Contact Tracking Log
5. Attachment E: Assessment of Pre-Existing Conditions - Right to Access Property Form
6. Attachment F: Letter to Property Owner Template for Pre-Existing Conditions Assessment
7. Attachment G: Pre-Existing Condition Assessment – Reporting Form – Template
8. Attachment H: Sample – Precondition Assessment and Damage Mitigation Report
9. Attachment I: Sample – Precondition Assessment Field Survey Report (excerpts)

End of Section

Attachment 12-A

CONSTRUCTION ZONE OF INFLUENCE
PHASE I - NEW FORCE MAIN CONSTRUCTION

PHASE I ZONE OF INFLUENCE NOTES:

1. PHASE I CONSTRUCTION ACTIVITY INCLUDES INSTALLATION OF NEW 36" FORCE MAIN ALONG HUXLEY PLACE AND REPLACEMENT OF GRAVITY SANITARY SEWER ALONG HUXLEY PLACE AND WINTERHAVEN DRIVE.
2. PHASE I CONSTRUCTION IMPACTS RESIDENTIAL BUILDINGS CONSTRUCTED IN THE 1960'S AND 1970'S. THERE ARE NO HISTORICALLY SIGNIFICANT BUILDINGS, STRUCTURES, OR SITES LOCATED IN THE PHASE I ZONE OF INFLUENCE.
3. SCHNABEL ENGINEERING PROVIDED GEOTECHNICAL ENGINEERING REPORT: HUXLEY PLACE FORCE MAIN EXTENSION DATED JULY 16, 2018. THIS REPORT CLASSIFIED THE SOILS FROM THE BORINGS ALONG HUXLEY PLACE AS SC, SM, SP, SP-SM, AND SC-SM. THE SOIL BORINGS INDICATE THAT ASPHALT THICKNESS RANGES FROM 3 INCHES TO 4 INCHES AND CRUSHED STONE BASE RANGES FROM 10 INCHES TO 11.5 INCHES
4. ANTICIPATED CONSTRUCTION DURATION OF 10 MONTHS IN PHASE I ZONE OF INFLUENCE. CONSTRUCTION WILL OCCUR DURING DAYLIGHT HOURS WITH THE EXCEPTION OF NIGHT TIME WORK REQUIRED DURING SHUTDOWNS.
6. CONSTRUCTION ACTIVITIES PRODUCING THE HIGHEST NOISE EMISSIONS INCLUDE: INSTALLING SHEET PILES AND TRENCH BOXES FOR SHORING, DUMP TRUCK GATES, CUTTING DUCTILE IRON PIPE, AND SAWCUTTING ROAD. THESE ACTIVITIES WILL OCCUR ALONG THE ENTIRE NEW FORCE MAIN ALIGNMENT.
7. CONSTRUCTION ACTIVITIES PRODUCING THE HIGHEST VIBRATION INCLUDE: INSTALLING SHEET PILES AND TRENCH BOXES FOR SHORING, VIBRATORY COMPACTION EQUIPMENT, MOVING TRUCKS AND HEAVY CONSTRUCTION EQUIPMENT.
8. NOISE ZONE OF INFLUENCE RADIUS BASED ON CONSTRUCTION EQUIPMENT EMITTING 90 DBA 50 FEET AWAY FROM EQUIPMENT. THE NOISE ANNOYANCE THRESHOLD WAS ASSUMED TO BE 64 DBA BASED ON INFORMATION PROVIDED FROM THE FEDERAL TRANSIT ADMINISTRATION OFFICE OF PLANNING AND ENVIRONMENTAL TRANSIT NOISE AND VIBRATION IMPACT ASSESSMENT MAY 2006 IN SECTION 11 OF THE HRSD DESIGN AND CONSTRUCTION STANDARDS. AT 1000 FT DISTANCE FROM EQUIPMENT THE NOISE EMISSION IS APPROXIMATELY 64 DBA. THE NOISE ZONE OF INFLUENCE HAS A RADIUS OF 1000 FT SHOWN IN THE FIGURE. IN AREAS WHERE THE NOISE ZONE OF INFLUENCE DOES NOT EXTEND 1000 FT BEYOND THE CONSTRUCTION AREA IT WAS ASSUMED THAT THE HOMES, VEGETATION, OR SOUND BARRIER WOULD BUFFER THE CONSTRUCTION NOISE. CALCULATIONS OF NOISE LEVELS AT DISTANCES AWAY FROM THE NOISE PRODUCING ACTIVITY WERE CALCULATED USING THE FOLLOWING FORMULA FROM THE FTA'S ASSESMENT:

   L_{EQ}(EQUIP)=E.L. + 10 LOG (U.F.) - 20 LOG (D/50) - 10 G LOG (D/50)

   WHERE:

   - L_{EQ} (EQUIP) IS THE L_{EQ} AT A RECEIVER RESULTING FROM THE OPERATION OF A SINGLE PIECE OF EQUIPMENT OVER A SPECIFIED TIME PERIOD
   - E.L. IS THE NOISE EMISSION LEVEL OF THE PARTICULAR PIECE OF EQUIPMENT AT THE REFERENCE DISTANCE OF 50 FT.
   - G IS A CONSTANT THAT ACCOUNTS FOR TOPOGRAPHY AND GROUND EFFECTS
   - D IS THE DISTANCE FROM THE RECEIVER TO THE PIECE OF EQUIPMENT, AND
   - U.F. IS A USAGE FACTOR THAT ACCOUNTS FOR THE FRACTION OF TIME THAT THE EQUIPMENT IS IN USE OVER THE SPECIFIED TIME PERIOD.
9. VIBRATION ZONE OF INFLUENCE RADIUS BASED ON CONSTRUCTION EQUIPMENT WITH PPV OF 0.21 IN/SEC AT 25 FT DISTANCE FROM EQUIPMENT. THE VIBRATION THRESHOLD OF 0.10 IN/SEC WAS ASSUMED BASED ON FIGURE C-2 FROM SECTION 11 OF THE HRSD DESIGN AND CONSTRUCTION STANDARDS. CALCULATIONS OF PEAK PARTICLE VELOCITY AT DISTANCES AWAY FROM EQUIPMENT WERE CALCULATED USING THE FOLLOWING FORMULA FROM THE FTA'S ASSESMENT:

   $PPV_{EQUIP}=PPV_{REF}X(25/D)^{1.5}$

   WHERE:

   - PPV (EQUIP) IS THE PEAK PARTICLE VELOCITY IN IN/SEC OF THE EQUIPMENT ADJUSTED FOR DISTANCE.
   - PPV (REF) IS THE REFERENCE VIBRATION IN IN/SEC AT 25 FEET FROM EQUIPMENT
   - D IS THE DISTANCE FROM THE EQUIPMENT TO THE RECIEVER

TABLE 1: CONSTRUCTION NOISE EMISSION

Distance From Equipment	dBA
25	96.0
50	90.0
75	86.5
100	84.0
200	78.0
300	74.4
400	71.9
500	70.0
600	68.4
700	67.1
800	65.9
900	64.9
1000	64.0

*BASED ON DATA FROM THE FEDERAL TRANSIT ADMINISTRATION OFFICE OF PLANNING AND ENVIRONMENTAL TRANSIT NOISE AND VIBRATION IMPACT ASSESSMENT MAY 2016, TABLE SHOWS DBA FOR CONSTRUCTION EQUIPMENT WITH TYPICAL NOISE LEVEL OF 90 DBA 50 FT FROM EQUIPMENT.

TABLE 2: CONSTRUCTION EQUIPMENT VIBRATION

PPV (in/sec)	Distance From Equipment (ft)
0.210	25
0.160	30
0.127	35
0.104	40

*BASED ON DATA FROM THE FEDERAL TRANSIT ADMINISTRATION OFFICE OF PLANNING AND ENVIRONMENTAL TRANSIT NOISE AND VIBRATION IMPACT ASSESSMENT MAY 2016, TABLE SHOWS PPV FOR CONSTRUCTION EQUIPMENT WITH TYPICAL VIBRATION LEVEL OF 0.21 IN/SEC 25 FT FROM EQUIPMENT.

NOT FOR CONSTRUCTION

1" = 300'

www.rkk.com | 757-926-4588 RK&K
Engineers | Construction Managers | Planners | Scientists

HRSD
Cleaning wastewater every day for a better Bay

NO.	DATE	BY	REVISION

PHASE I ZONE OF INFLUENCE

HAMPTON ROADS SANITATION DISTRICT
HUXLEY PLACE TO MIDDLE GROUND BOULEVARD INTERCEPTOR FORCE MAIN EXTENSION

DESIGNED BY:	DSW	DATE:	DECEMBER 2018
DRAWN BY:	DSW	FILE NO.:	815191
CHECKED BY:	MVG	DRAWING NO.:	
SCALE:	AS NOTED	SHEET NO.:	of

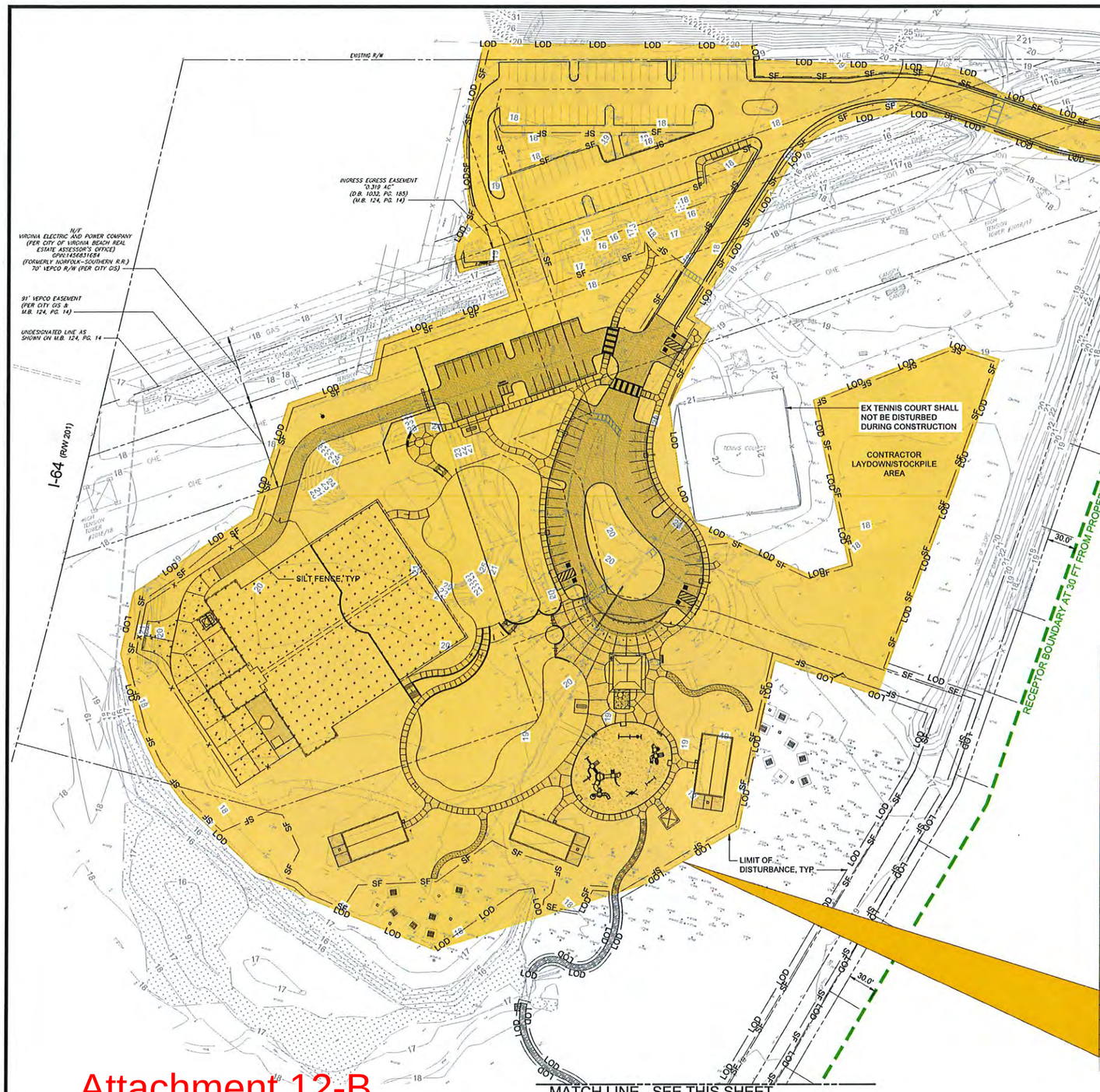

NOISE MONITORING NOTES:

1. CONTRACTOR SHALL MONITOR AND DOCUMENT BASELINE NOISE LEVELS AT THREE (3) OR MORE LOCATIONS NEAR THE IDENTIFIED RECEPTOR BOUNDARY DURING NON-WORKING PERIODS.
2. CONTRACTOR SHALL MONITOR AND DOCUMENT NOISE LEVELS AT THE SAME RECEPTOR LOCATIONS DURING THE PEAK ACTIVITY PERIOD.
3. CONTRACTOR SHALL USE A TYPE 2 / CLASS 2 SOUND LEVEL METER THAT MEETS OR EXCEEDS IEC 61672.

MATCH LINE - SEE THIS SHEET

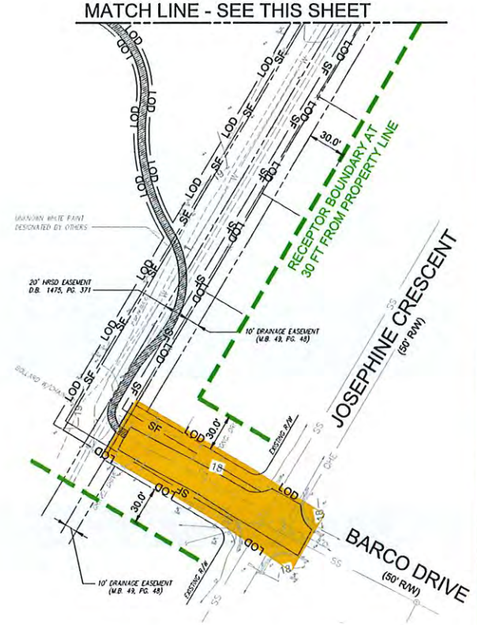

NOISE GENERATION AND IMPACTS

PHASE	ACTIVITY	DAY	NIGHT	EQUIPMENT	QUANTITY	ACOUSTICAL USE FACTOR (%) *	WORK DESCRIPTION	RECEPTOR *	DISTANCE TO RECEPTOR (ft)	COMBINED CALCULATED (dBA) * Lmax	COMBINED CALCULATED (dBA) * L10	LIMITS (dBA) (Day) * Lmax	LIMITS (dBA) (Day) * L10	SHIELDING (dBa) *	COMBINED CALCULATED EXCEEDANCE (dBA) * Day	COMBINED CALCULATED EXCEEDANCE (dBA) * Night	NOTES / ACTIONS
0	Construction Entrance	Yes	No	Dump Truck	5	40%	Delivery and removal of materials.	Residential homes	30	77.9	76.9	85	75	3	1.9	N/A	Exceedance is minimal. Receptor is the residential property that fronts Providence Road, therefore anticipated Daytime Baseline is likely to be at or exceeding the calculated noise level.
1	Excavation	Yes	No	Excavator	2	40%	Waterline installation along eastern property boundary	Residential homes	300	77.9	78.6	85	75	3.0	3.6	N/A	No actions required
1	Excavation	Yes	No	Off-Road Dump Truck	3	40%	Waterline installation along eastern property boundary	Residential homes	135								
1	Excavation	Yes	No	Dozer	1	40%	Maintenance of stockpile and site.	Residential homes	135								
1	Dewatering	Yes	Yes	Pumps (Per dba required)	2	100%	Dewatering of tank excavation.	Residential homes	500								
2	Pile Driving	Yes	No	Pile Driver Impact	1	20%	Pile Driving for tank foundation	Residential homes	530	77.8	74.1	85	75	3.0	No Exceedance	N/A	No actions required
2	Pile Driving	Yes	No	Use Crane; Derrick	1	16%	Crane for pile driving	Residential homes	480								Exceedance is minimal. Consider application of an Acoustic Shadow/Barrier such as straw bails or other. Combine with receptor perimeter monitoring.
2	Dewatering	Yes	Yes	Pumps (Per dba required)	2	100%	Dewatering of tank excavation.	Residential homes	500							5.9	
3	Utility Installation	Yes	No	Backhoe	1	40%	Waterline installation along eastern property boundary	Residential homes	30	79.0	78.0	85	75	3.0	3.0	N/A	Exceedance is minimal. Possible additional shielding will occur via existing vegetation and stockpile storage area. Install receptor perimeter monitoring and potential remediation of proximity related equipment.
3	Utility Installation	Yes	No	Compactor	1	40%	Waterline installation along eastern property boundary	Residential homes	30	84.7	80.7	85	75	3.0	5.7	N/A	
3	Utility Installation	Yes	No	Loader	1	40%	Waterline installation along eastern property boundary	Residential homes	30	80.5	79.6	85	75	3.0	4.6	N/A	
3	Tank Construction	Yes	No	Use Crane; Derrick	2	16%	Tank construction consisting of concrete placement and precast element placement.	Residential homes	480	60.4	61.4	85	75	3.0	No Exceedance	N/A	
3	Tank Construction	Yes	No	Concrete Mixers	2	15%		Residential homes	480								
3	Tank Construction	Yes	No	Concrete Vibrator	1	15%	Cast in place concrete placement.	Residential homes	480								
3	Tank Construction	Yes	No	Air Compressor	1	15%	For use near tank...	Residential homes	480								
3	Tank Construction	Yes	No	Loader	1	40%	For use on site wide soil and material placement.	Residential homes	480								
4	Backfill & Final Grading	Yes	No	Excavator	1	40%	Backfilling of excavated areas and site wide grading.	Residential homes	135	69.1	71.7	85	75	3.0	No Exceedance	N/A	No actions required
4	Backfill & Final Grading	Yes	No	Off-Road Dump Truck	2	40%	Backfilling of excavated areas and site wide grading.	Residential homes	135								
4	Backfill & Final Grading	Yes	No	Roller	1	40%	Backfilling of excavated areas and site wide grading.	Residential homes	250								
4	Backfill & Final Grading	Yes	No	Grader	1	40%	Backfilling of excavated areas and site wide grading.	Residential homes	250								
4	Backfill & Final Grading	Yes	No	Paver	1	40%	Paving of Barco Drive	Residential homes	40	76.7	76.1	85	75	3.0	1.1	N/A	Exceedance is minimal. No actions required.

* NOTE: All calculations and noise data were developed using the Roadway Construction Noise Model (RCNM) developed by the Federal Highway Administration (FHWA). Version 1.1, 12/08/2008

SCALE: 1" = 60'

60 30 0 60'

Attachment 12-B

REV	ISSUED FOR	DATE	BY

PROJECT ENGINEER: T. McPHERSON
DESIGNED BY: T. McPHERSON / C. LINK
DRAWN BY: M. BRANDT
CHECKED BY: T. McPHERSON
IF THIS BAR DOES NOT MEASURE 1" THEN DRAWING IS NOT TO FULL SCALE 0 1/2" 1"

Hazen
HAZEN AND SAWYER
4500 MAIN STREET, SUITE 500
VIRGINIA BEACH, VIRGINIA 23462
PHONE: 757 497-0490

CROWDER CONSTRUCTION COMPANY SINCE 1947
CROWDER CONSTRUCTION COMPANY
1111 BURMA DRIVE
APEX, NORTH CAROLINA 27539
PHONE: 800-849-5449

City of Virginia Beach

HRSD

PROVIDENCE ROAD OFF-LINE STORAGE FACILITY AND WOODSTOCK PARK IMPROVEMENTS

PRECONSTRUCTION ASSESSMENT AND DAMAGE MITIGATION PLAN
NOISE GENERATION AND IMPACTS
PHASE 4
BACKFILL & FINAL GRADING

DATE: AUGUST 2019
HAZEN NO.: 31419-000
FIGURE NO. 1.4

File: C:\31419-HRD\31419-000\CAD_DM\MISC\PRECONST FIGURES\PRECONSTRUCTION FIGURES Saved by MBRANDT Save date: 9/9/2019 11:51 AM
PLOT DATE: 9/9/2019 11:53 AM BY: MBRANDT

Attachment 12-C

SCALE: 1" = 90'

90 45 0 90'

REV	ISSUED FOR	DATE	BY

PROJECT ENGINEER:	T. McPHERSON
DESIGNED BY:	T. McPHERSON / C. LINK
DRAWN BY:	M. BRANDT
CHECKED BY:	T. McPHERSON
IF THIS BAR DOES NOT MEASURE 1" THEN DRAWING IS NOT TO FULL SCALE	0 1/2" 1"

Hazen

HAZEN AND SAWYER
4500 MAIN STREET, SUITE 500
VIRGINIA BEACH, VIRGINIA 23462
PHONE: 757 497-0490

CROWDER CONSTRUCTION COMPANY SINCE 1947

CROWDER CONSTRUCTION COMPANY
1111 BURMA DRIVE
APEX, NORTH CAROLINA 27539
PHONE: 800-849-5449

City of Virginia Beach

HRSD

PROVIDENCE ROAD OFF-LINE STORAGE FACILITY AND WOODSTOCK PARK IMPROVEMENTS

PRECONSTRUCTION ASSESSMENT AND DAMAGE MITIGATION PLAN DEWATERING IMPACTS

DATE:	AUGUST 2019
HAZEN NO.:	31419-000
FIGURE NO.	3

File: O:\31419-HRSD\31419-000\CAD_BIM\MISC\PRECONSTRUCTION FIGURES\PRECONSTRUCTION FIGURES Saved by MBRANDT Save date: 9/10/2019 6:18 AM
PLOT DATE: 9/10/2019 6:23 AM BY: MBRANDT

Client: HRSD Project Title: _____ Project Manager: _____

HRSD Authories Copy to Owner: Yes / No

Street #	Street Address	Parcel #	Owner Name	Phone #	Notification Dates: 1st (letter)	Notification Dates: 2nd (letter)	Notification Dates: 3rd (call)	Notification Dates: 4th, Final Attempt Ltr.	Access Signature Date	Authorized & Signed By	Survey Date	Survey Time	Survey Extent:	Copy to Owner	Notes
1436	Air Rail Ave	1234567890	Russo, Karen	XXX-XXX-XXXX	Mailed Certified Return Receipt Letter. on 2/19/14.	Mailed Certified Return Receipt Letter. on 2/26/14.	Called on 2/28/14 at 8:47 p.m. and scheduled an inpection time for Mar 3, 2014 at 4:00 p.m.		3/7/2014	Real Estate Manager	3/7/2014	9:12 a.m.	Interior and Exterior Video & Photos Authorized	Y	*Owner would not allow acess to attic
Apartments (speak with Property Managemant)															
2734	Gate House Road	1437964730	Annetta M Lane Housing Inc.		Spoke to site mananger Sherill Christian on 2/19/14 at 2:10 p.m. who said she would forward letter to the property owner.	Spoke with site manager on 2/26/14 at 9:15 a.m. She stated the owner has received the letter but has not yet verified if she wants to proceed with the pre-construction survey.	Called on 3/10/14 and scheduled and inspection for 3/13/14.		3/10/2014	Sherill Christian	3/13/2014	10:30 a.m.	Interior and Exterior		

Right to Access Property

Insert 'Public' Project Name

I hereby acknowledge that I understand the purpose of the pre-existing condition assessment (pre-construction survey) for the property address listed below. I am the owner / owner's agent and I am authorized to make the following decision:

☐ Allow access to the exterior and interior of the property.

☐ Allow access to the exterior of the property only.

☐ Allow access to the interior of the property only.

☐ Deny access to the property.

Video and Photographic Documentation

☐ Allow the inspector/ engineer to take photos and videos of the exterior and interior of the property.

☐ Allow the inspector/ engineer to take photos and videos of the exterior of the property only.

☐ Allow the inspector/ engineer to take photos and videos of the interior of the property only.

☐ Deny the inspector/ engineer to take photos and videos of the property.

Address _____

Authorized Party Print Name _____

Authorized Party Signature _____ Date _____

Inspector's Name _____ Date of Inspection _____

Cleaning wastewater every day for a better Bay.

Date

Subject: **Pre-Existing Condition Assessments for the Public Project Name**

Dear Property Owner/ Authorized Representative:

We are contacting you with regards to the HRSD insert - Public Project Name here project that will be constructed near your property. Insert - name of Assessing Firm here, an independent, third-party consulting firm, has been engaged by HRSD's select one- contractor/consultant, insert contractor/consultant's name here to document conditions of buildings and improvements adjacent to the project before construction begins. These condition assessments, which are being offered for specific buildings along the construction corridor, will be performed at no cost to you.

While the construction operations are not expected to have any impact on your building, a Pre-Existing Condition Assessment is a precautionary measure to protect all parties involved. The full assessment will include video / photographs of the interior and exterior of your building along with written documentation of the various building materials and any deficiencies that are visible during the survey. This documentation of conditions before the start of construction will form a basis of discussion and resolution for any concerns that may arise during this project.

It is normal for occupants to notice some vibrations during construction, and these should not be a cause for alarm. To ensure buildings are protected from vibration impacts, seismic monitoring equipment may be placed at structures near and throughout the work site and will be used to measure ground vibration during this project.

We request your permission to perform the assessment, and ask that you call the **insert- Assessing Firm's name here scheduling department at insert - local or toll free number 1-XXX-XXX-XXXX** to schedule an appointment or if you have questions about this service. We suggest that you plan to accompany our representative to ensure you receive the best possible assessment in the time available, and encourage you to bring specific items of concern to the assessor's attention.

As these assessments need to be completed prior to construction beginning, we ask that you respond to this letter by scheduling, as soon as possible. We look forward to hearing from you.

Respectfully Submitted,

_____

HRSD | Real Estate Manager

**Use Updated Letterhead*

PO Box 5911, Virginia Beach, VA 23471-0911 • 757.460.2261 • Fax 757.363.7917

Commissioners: Vishnu K. Lakdawala, PhD, Chair • Frederick N. Elofson, CPA, Vice-Chair • Michael E. Glenn
Arthur C. Bredemeyer • Maurice P. Lynch, PhD • Stephen C. Rodriguez • Susan M. Rotkis • Willie Levenston, Jr.
www.hrsd.com

Pre-Existing Condition Assessment Report

This checklist is for informational purposes only.

PROJECT NAME:					
Property Address:					
Property Owners Name					
Owner Occupied:	Yes No	Age of Dwelling:		Dwelling Location on Block:	
Inspector Name:				No. of Stories:	
House size (sq. feet)		No. of bedrooms		No. of bathrooms	

House style and color			
House faces	☐ north ☐ south ☐ east ☐ west		
Daytime street traffic	☐ Yes ☐ No	Nighttime street traffic	☐ Yes ☐ No
Air traffic	☐ Yes ☐ No	Train traffic	☐ Yes ☐ No
Sidewalks	☐ Yes ☐ No	Condition of Sidewalk:	

Construction:	Frame	Masonry Veneer	Masonry	Other:
Overall condition of Home	Excellent	Good	Poor	Other

Any unrepaired Damages:	Yes No	Describe:	
Driveway	☑ Yes ☐ No	Condition of Driveway	
Exterior Inspection (Note all existing			

Condition of Exterior Walls:	
Condition of Roof:	
Condition of Exterior Surfaces:	
Condition of Chimney(s):	
Condition of Landscaping:	
Irrigation System:	
Special Architectural features:	
Condition of neighboring houses	
Other Comments:	

Visible Condition of the Property: Using the key below, apply the letter that best describes the condition of each item.

Key	**Comments**
M – Missing	
G – Good condition	
S – Scratched	
D – Damaged	
B – Broken	
R – Repair/Replacements needed	

Exterior

FEATURE	CONDITION
Front door	
Front screen door	
Back door	
Back screen door	
Screen and storm windows	
Glass and frames	
Siding/brick, etc.	
Mailbox	
Doorbell	
House number	
Garbage container	
Recycling containers	
Paint and trim	
Patios and decks	
Roof and flashing	
Chimney	
Gutters	
Eaves	
Driveway	
Shed	

Exterior

FEATURE	CONDITION
Garage	
Outdoor lighting	
Parking	
Drainage	
Retaining wall	
Soil movement	
Yard	

Dining Room

FEATURE	CONDITION
Windows	
Carpet or floor	
Walls	
Ceiling	
Lights and switches	
Outlets	
Baseboards	
Trim	

Visible Condition of the Property: Using the key below, apply the letter that best describes the condition of each item.

Key	Comments
M – Missing	
G – Good condition	
S – Scratched	
D – Damaged	
B – Broken	
R – Repair/Replacements needed	

Kitchen

FEATURE	CONDITION
Windows	
Floor	
Walls	
Ceiling	
Lights and switches	
Outlets	
Stove	
Refrigerator	
Sink	
Cabinets and counter	
Baseboards	
Trim	

Living Room

FEATURE	CONDITION
Door	
Windows	
Carpet or floor	
Walls	

Living Room

FEATURE	CONDITION
Windows	
Carpet or floor	
Walls	
Ceiling	
Outlets, including cable outlet	
Lights and switches	

Hallway and Stairwell

FEATURE	CONDITION
Floor	
Walls	
Ceiling	
Lights and switches	
Outlets	
Baseboards	
Trim	
Stair treads	
Stair structure	
Landing and handrail	

Visible Condition of the Property: Using the key below, apply the letter that best describes the condition of each item.

Key	Comments
M – Missing	
G – Good condition	
S – Scratched	
D – Damaged	
B – Broken	
R – Repair/Replacements needed	

Bedrooms

	CONDITION			
FEATURE	**BEDROOM 1**	**BEDROOM 2**	**BEDROOM 3**	**BEDROOM 4**
Door				
Windows				
Carpet or floor				
Walls				
Ceiling				
Lights and switches				
Outlets				
Closet				
Baseboards				
Trim				

Visible Condition of the Property: Using the key below, apply the letter that best describes the condition of each item.

Key	**Comments**
M – Missing	
G – Good condition	
S – Scratched	
D – Damaged	
B – Broken	
R – Repair/Replacements needed	

Bathrooms

	CONDITION			
FEATURE	**BATHROOM 1**	**BATHROOM 2**	**BATHROOM 3**	**BATHROOM 4**
Door				
Window				
Floor				
Walls				
Ceiling				
Sink				
Tub/shower				
Toilet				
Cabinet, shelves, closet				
Towel bars				
Lights and switches				
Outlets				
Baseboards				
Trim				

Visible Condition of the Property: Using the key below, apply the letter that best describes the condition of each item.

Key	**Comments**
M – Missing	
G – Good condition	
S – Scratched	
D – Damaged	
B – Broken	
R – Repair/Replacements needed	

Fireplace

FEATURE	CONDITION
Damper	
Firebox	
Chimney	
Spark arrestor	
Rain cap	

Basement

FEATURE	CONDITION
Trim	
Sump and pump	
Stairs	

Basement

FEATURE	CONDITION
Door	
Windows	
Floor	
Walls	
Ceiling	
Storage	
Foundation	
Lights and switches	
Outlets	
Baseboards	

Plumbing

FEATURE	CONDITION
Pressure	
Drainage	
Hot water	
Washer	
Dryer	

Visible Condition of the Property: Using the key below, apply the letter that best describes the condition of each item.

Key	Comments
M – Missing	
G – Good condition	
S – Scratched	
D – Damaged	
B – Broken	
R – Repair/Replacements needed	

DIAGRAM

Visible Condition of the Property: Using the key below, apply the letter that best describes the condition of each item.

Key	**Comments**
M – Missing	
G – Good condition	
S – Scratched	
D – Damaged	
B – Broken	
R – Repair/Replacements needed	

DIAGRAM

Visible Condition of the Property: Using the key below, apply the letter that best describes the condition of each item.

Key	**Comments**
M – Missing	
G – Good condition	
S – Scratched	
D – Damaged	
B – Broken	
R – Repair/Replacements needed	

DATE, 20XX

To: Project Manager (HRSD)
Real Estate Manager (HRSD)
Chief of Design & Construction/SWIFT/Special Projects (HRSD)

From: Design Engineer, PE (FIRM)

Re: Insert Project Name

Preconstruction Assessment and Damage Mitigation Memorandum

Preconstruction Assessment and Damage Mitigation

DRAFT STATUS

Introduction

In recent years, HRSD has received an increasing number of complaints from residents and locality staff regarding the condition of roads, sidewalks, drainage ditches, private property, damage to buildings, etc. within close proximity to active construction. This assessment provides evaluation of the potential construction related impacts to the surrounding area as well as monitoring and potential remediation strategies.

Project Background

The Providence Road Off-Line Storage Facility (PROLSF) is a partially buried 5.2-million-gallon storage tank to be constructed within the City of Virginia Beach's Woodstock Park. that will divert flow during peak events, store flow until system pressures subside, and return stored flows back into the HRSD system. This facility is critical to the successful diversion of CETP flow to ATP during wet weather conditions and therefore, must be fully operational by June 2021. The PROLSF will include a storage tank, pump station, control room and dry well. Specific work includes demolition of the existing site facilities, construction of buried and above grading piping, tank foundation and associated pile supports, incidental concrete work, site work and stormwater system improvements, instrumentation and control systems, HVAC systems, odor control systems, potable water systems, flushing/cleaning systems and all other incidental electrical, I&C ,structural work, park improvements and new skate park. The Design-Build team of Crowder Construction & Hazen and Sawyer were selected for this project.

1. Construction Impact Research and Evaluation

For the PROLSF, Preconstruction Assessment and Damage Mitigation evaluation was based upon Section 11 of HRSD's Design and Construction Standards dated January 2019. The design-build team utilized a 4-phase construction activity approach as shown in Table 1. Specific equipment assigned to each phase of work is further detailed in the phased construction tables provided in Appendix A – Figure 1.1 through Figure 2

Table 1

PHASE	ACTIVITY	DESCRIPTION
1	Excavation	Activities consist of installation of erosion and sediment control elements, sediment traps, tree removal, demolition of existing onsite structures, tank excavation and dewatering.
2	Pile Driving	Activities consist of pile driving for the tank foundation and continuous dewatering operations.
3	Tank & Utility Construction	Activities consist of concrete placement for the tank, installation of below ground utilities, restroom facilities and playground components.
4	Backfill & Grading	Activities consist of backfilling of soils for tank and final grading.

Construction impact research and investigations for this design-build project and related activities on the Woodstock Park site considered means and methods of the proposed work and was based on direct input from the Crowder team in combination with Hazen's design team's analysis of the following anticipated construction related impacts:

- Noise Generation and Impacts from construction equipment such as dewatering pumps, excavators, dump trucks, dozers, compactors and pile driving.
- Vibration Impacts from construction equipment such as excavators, dump trucks, dozers, compactors and pile driving.
- Dewatering Impacts on Ground Structures and Settlement as they relate to the extents of the cone of depression for the ground watering operations.

2. Risk Mitigation Analysis and Recommendations

2.0 Noise Generation and Impacts

Noise Generation and Impacts were calculated using the Federal Highway Administration's (FHWA) Roadway Construction Noise Model (RCNM) version 1.1. The model predicts the noise generated at the identified receptors by applying related historic noise data associated with each piece of equipment. See Appendix B for detailed information related to the RCNM. Each

construction phase was modeled based on the proximity of the construction activity identified in Table 1. Specific equipment for each phase/activity were provided by Crowder and combined within their respective areas of application to predict the noise generated for each phase. See Appendix A Figure 1.1 – Figure 1.4 for phase maps and tabular results of the noise generation and impact analysis. Noise Levels for this analysis were calculated for L_{10} and L_{max}. L_{10} is the noise level exceeded for 10% of the time of the measurement duration. This is often used to give an indication of the upper limit of fluctuating noise, such as that from road traffic. L_{max} is the highest noise level for the measuring period.

2.0.1 Noise Reduction

While the distance between each noise source and receptor was considered, an additional estimated noise shielding of 3 dBA was utilized in the calculations to account for noise reduction associated with existing vegetation and change in topography. Understanding that existing site vegetation and soil stockpile(s) will provide additional shielding, 3 dBA is considered conservative (less than a whisper). Typical Threshold of Hearing comparisons are shown in Figure 1.

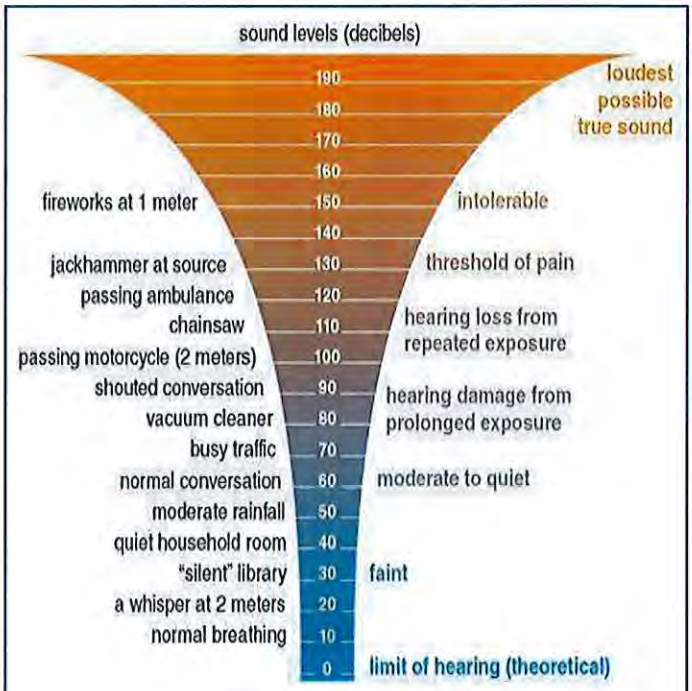

Figure 1 – Threshold of Hearing

2.0.2 Time of Day Considerations

Acceptable noise levels are compared with Daytime, Evening and Nighttime Baseline noise levels with relative decreasing baselines and exceedance limits. The PROLSF project will limit construction work hours to 7 a.m. to 5 p.m. Monday-Friday, therefore, Daytime Noise Limits were used as the exceedance metric. The only exception to the time of day consideration is use of dewatering pumps. The dewatering pumps will run constantly to maintain the necessary ground water levels required for the project. Therefore, noise related to dewatering pumps was compared to nighttime baseline noise levels and measured relative to the nighttime noise exceedance limits.

2.0.3 Noise Analysis Results

A summary of the predicted noise levels indicates that individual and combined calculated noise levels for the subject project exceed the noise limits (L_{10} and L_{max}) in some instances ranging from 0 (dBA) – 22.9 (dBA). The predicted exceedance(s) are considered minimal as 30 dBA is considered "faint". See Figure 1 for various noise level characterizations. See Appendix A Figure 1.1 – Figure 1.4 for phase maps and tabular results of the noise generation and impact analysis.

2.0.4 Noise Mitigation Recommendations

- Monitor and document baseline noise levels at three or more locations near the identified receptor boundary during non-working periods.

- Monitor and document noise levels at the same receptor locations during the peak activity period.

- Use a Type 2 / Class 2 sound level meter that meets or exceeds IEC 61672

2.1 Vibration Generation and Impacts

Vibration impacts are anticipated due to use of heavy equipment and pile driving activities within the park adjacent to the residential properties to the East, Dominion Energy facilities to the North and I-64 to the West. Vibration Generation and Impacts were analyzed based upon the Damage Assessment formula (*shown below*) for Quantitative Construction Vibration Assessment Methods noted in the *Federal Transit Administration (FTA), Transit Noise and Vibration Impact Assessment (2006).*

$$PPV_{equip} = PPV_{ref} \times (25/D)^{1.5}$$

where:

- *PPV(equip) is the peak particle velocity in in/sec of the equipment adjusted for distance*
- *PPV(ref) is the reference vibration level in in/sec at 25 feet*
- *D is the distance from the equipment to the receiver.*

The formula predicts the vibration generated at the identified distance by applying related historic vibration data associated with each piece of equipment. Each construction phase was modeled based on the proximity of the construction activity identified in Table 1. Specific equipment for each phase/activity were provided by Crowder and combined within their respective areas of application to predict the vibration generated for each activity. See Appendix A Figure 2 for the tabular results of the vibration generation and impact analysis.

2.1.1 Projected Vibrations Associated with Pile Driving

When considering the suitability of a driven pile foundation, consideration should be given to the integrity of nearby structures. Due to the large amount of energy required to install driven deep foundations, vibrations of considerable magnitude are generated. These vibrations may affect nearby structures. These structures can, due to their proximity, be detrimentally affected by the construction unless proper protection measures are taken. In addition, experience has shown that these construction features will often lead adjacent property owners to conclude that damage to their property has taken place, even though none has occurred. Geotechnical analysis for the project site indicates that vibrations should only be considered an issue for structures within 200 ft. of the pile driving activity. This conclusion is further supported by the vibration projections provided herein. Appendix A Figure 2 shows the extents of the 200 ft offset that represents the

area of projected impacts. See Section 2.1.3 for specific recommendations associated with the vibration analysis.

2.1.2 Vibration Analysis Results

A summary of the predicted vibration levels indicates that individual calculated vibration levels for the subject project range from 0.0001 PPV to 0.0677 PPV. The high-end vibration predictions are generated from the utility installation along the Eastern boundary of the project site and are primarily influenced by the proximity to the receptor. While considered to be "strongly noticeable", vibrations at this level are considered to be "very safe to buildings". See Figure 2 for Typical Vibration Sources and Sensitivities.

Figure 2 – Typical Vibration Sources and Sensitivities

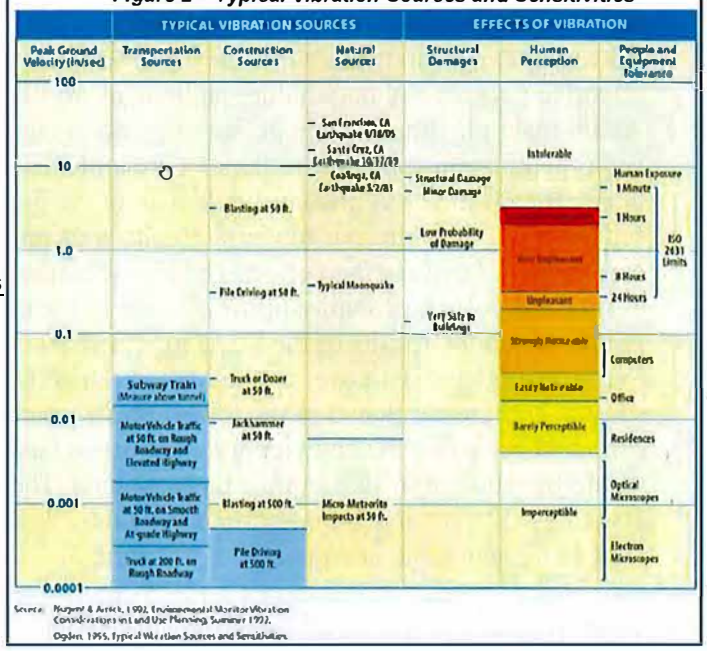

2.1.3 Vibration Mitigation Recommendations

- Prepare a vibration monitoring plan per specification section 02367. The plan shall include the following:
  - Photo documentation of the condition of all site structures that will remain during construction, in particular documentation of the Dominion Energy structures.
  - Monitor and document baseline vibration levels at three or more locations near the identified receptor boundary during non-working periods.
- Monitor and document vibration levels at the same receptor locations during the peak activity period.

2.2 Groundwater Dewatering Impacts

Excavations within the footprint of the PROLSF storage tank and pump station will extend to depths of up to 29 feet below existing site grades, corresponding to ELEV -9 for a duration of approximately 12 months. Considering the depth of the excavation and the observed groundwater levels within the proposed tank and pump station footprint, significant dewatering operations are expected. Lowering the groundwater table during dewatering activities will result in an increase in effective stresses and may induce settlements of the soils underlying adjacent structures/pavements. Additionally, hydraulic compaction of predominately granular soils (e.g. SP, SP-SM, SM soils) and potential consolidation settlement is anticipated as a result of lowering the groundwater table.

2.2.1 Dewatering Analysis

Griffin Dewatering, LLC (Griffin) was selected to analyze, design and provide the necessary dewater system for the PROLSF site. Griffin analyzed the dewatering for the excavations utilizing a series of analytical equations for estimating the flow from radial source in an unconfined aquifer (Thiem Equation). The radius of influence of the system was estimated using an empirical relationship developed by Sichart and Kryieleis. Results of the radius of influence analysis are depicted in Appendix A – Figure 3 as drawdown contour lines.

2.2.2 Dewatering/Settlement Analysis

Lowering the groundwater table during dewatering activities will result in an increase in effective stresses and may induce settlements of the soils underlying adjacent structures. Additionally, hydraulic compaction of predominately granular soils (e.g. SP, SP-SM, SM soils) and potential consolidation settlement are anticipated as a result of lowering the groundwater table. The elastic or immediate settlement of the granular subsurface soils, and consolidation settlement of the cohesive subsurface soils were analyzed for the projected 12-month construction / dewatering period. The elastic settlement of the subsurface granular soils was evaluated by use of a semi-empirical strain influence factor proposed by *Schmertmann and Hartman* and the results of the Standard Penetration Tests. The cohesive soils are estimated to be over-consolidated with over consolidation ratios (OCR) of approximately 1.5 in the upper CLAY stratum and greater than 3 in the lower CLAY stratum. These OCR's were estimated based on similar soils within the site vicinity and limited laboratory testing (additional laboratory testing would be required to substantiate these values). The total settlement magnitudes were calculated at the 18-, 12-, 6-, and 2-foot groundwater drawdown contour lines depicted in the estimated total settlement table in Appendix A – Figure 3.

2.2.3 Dewatering Mitigation Recommendations

- Place settlement monuments for tracking elevation changes and monitor/document at regular intervals.
- Should settlement become evident contractor should develop a plan for remediation of estimated total settlement related to dewatering.

2.3 Odor Impacts - Insert finding and recommendations

2.4 Dust Impacts - Insert finding and recommendations

Appendix A: Figures

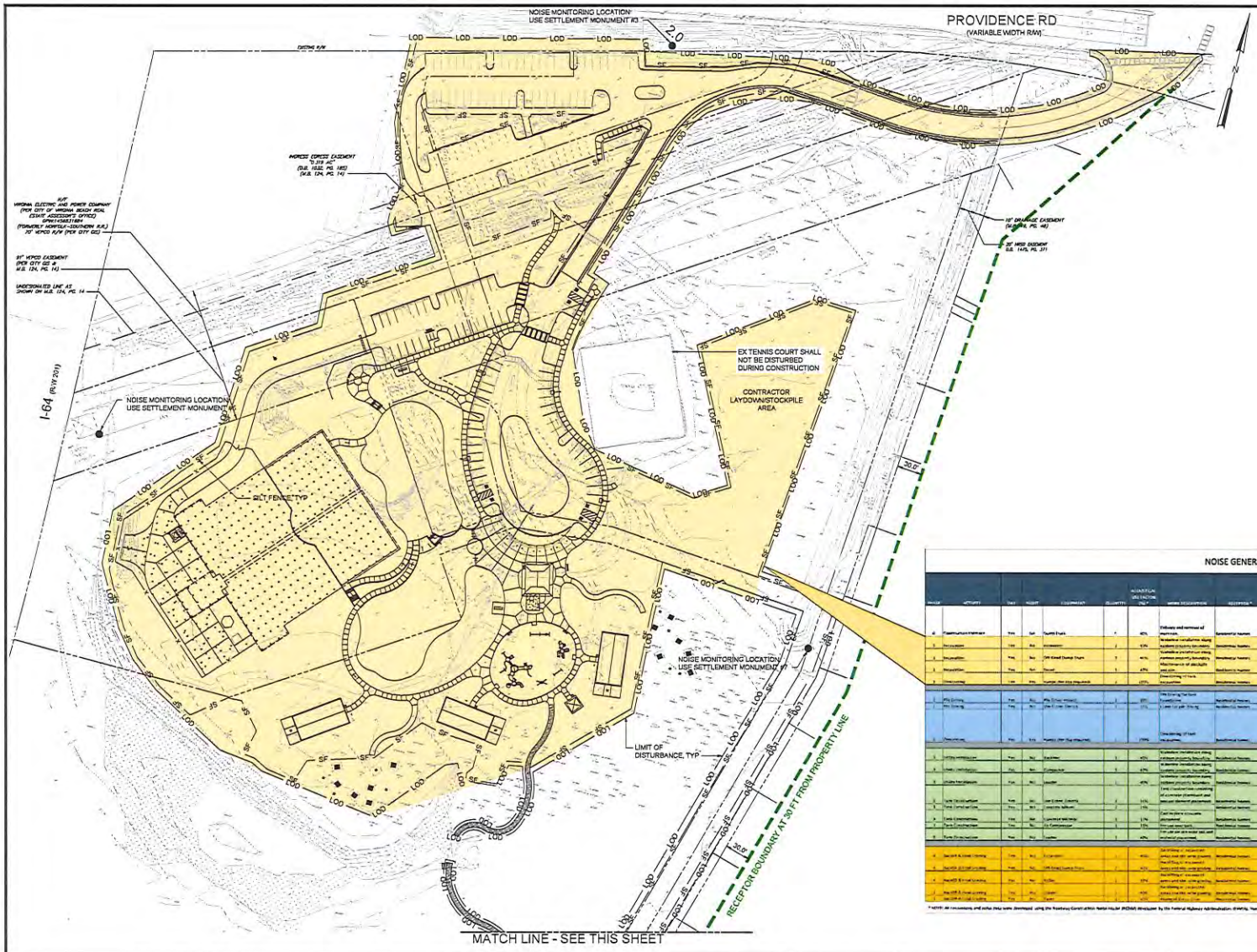

NOISE MONITORING NOTES:

1. CONTRACTOR SHALL MONITOR AND DOCUMENT BASELINE NOISE LEVELS AT THREE (3) OR MORE LOCATIONS NEAR THE IDENTIFIED RECEPTOR LOCATIONS DURING NON-WORKING PERIODS.
2. CONTRACTOR SHALL MONITOR AND DOCUMENT NOISE LEVELS AT THE SAME RECEPTOR LOCATIONS DURING THE PEAK ACTIVITY PERIOD.
3. CONTRACTOR SHALL USE A TYPE 2 / CLASS 2 SOUND LEVEL METER THAT MEETS OR EXCEEDS IEC 61672.

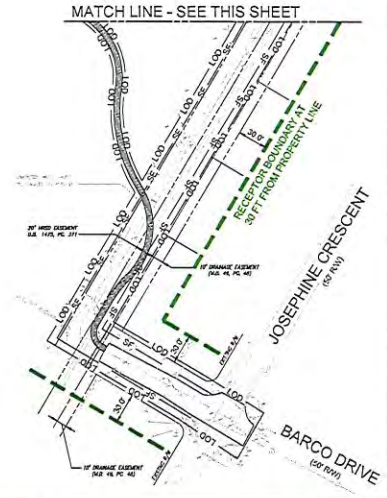

NOISE GENERATION AND IMPACTS

Receptor	Activity	Start	Finish	Equipment	Quantity	Acoustical Use Factor (%)*	Noise Description	Receptor*	Distance to Receptor (ft)	Equipment Calculated Lmax* Lmax	Equipment Calculated Lmax* L10	Limits Lmax (dBA)* Lmax	Limits Lmax (dBA)* L10	Limits Leq (dBA)* Leq	Limits Leq (dBA)* L10	Exceedance Lmax*	Commence Calculated Exceedance (dBA)* Lmax	Leq*	Actions / Actions
1	Construction Preparation	Mon	Sat	Pickup Truck	1	40%	Delivery and removal of equipment.	Residential Homes	50	77.6	76.6	85	75	65	65	2	1.6	N/A	Residences in immediate vicinity of construction property line may experience some disturbance and potential interruption of their normal daily activities. Contractor will make every reasonable effort to minimize disturbance.
2	Excavation	Mon	Sat	Excavator	1	40%	Excavation in proximity along residential property line where residences are located.	Residential Homes	50										
3	Excavation	Mon	Sat	Off-Road Dump Truck	1	40%	Excavation in proximity along residential property line. Maintenance of stockpile material.	Residential Homes	150	77.6	76.6	85	75	65	65	2.1	1.6	N/A	No action required.
4	Excavation	Mon	Sat	Dozer	1	40%	Maintenance of stockpile material.	Residential Homes	150										
5	Dewatering	Mon	Sun	Pumps (for dewatering)	2	100%	Dewatering of trench excavations.	Residential Homes	50										
1	Pile Driving	Mon	Sat	Pile Driver (Impact)	1	20%	Pile Driving Test Bank Construction.	Residential Homes	150	77.6	73.6	85	75	65	65	2.1	1.6	N/A	No action required.
2	Pile Driving	Mon	Sat	Pile Driver (Impact)	1	20%	Pile Driving Test Bank Construction.	Residential Homes	400										
3	Dewatering	Mon	Sun	Pumps (for dewatering)	2	100%	Dewatering of trench excavations.	Residential Homes	50	77.6	73.6	85	75	65	65	2.1	1.6	N/A	Residences in vicinity of pile driving may experience some disturbance and potential interruption of their normal daily activities. Contractor will make every reasonable effort to minimize disturbance.
1	Utility Installation	Mon	Sat	Backhoe	1	40%	Excavation installation along residential property line where residences are located.	Residential Homes	50	84.7	79.6	85	75	65	65	2.1	1.6	N/A	Residences in vicinity of utility installation may experience some disturbance and potential interruption of their normal daily activities. Contractor will make every reasonable effort to minimize disturbance.
2	Utility Installation	Mon	Sat	Compactor	1	40%	Excavation installation along residential property line where residences are located.	Residential Homes	50	84.7	82.7	85	75	65	65	2.1	1.6	N/A	
3	Utility Installation	Mon	Sat	Loader	1	40%	Excavation installation along residential property line where residences are located.	Residential Homes	50	84.7	79.6	85	75	65	65	2.1	1.6	N/A	
1	Tank Construction	Mon	Sat	Low Ground Crawler	1	11%	Tank Construction consisting of concrete foundation and precast element placement.	Residential Homes	400	60.8	73.6	85	75	65	65	2.1	1.6	N/A	Residences in vicinity of tank construction may experience some disturbance and potential interruption of their normal daily activities. Contractor will make every reasonable effort to minimize disturbance.
2	Tank Construction	Mon	Sat	Concrete Vibrator	1	11%	Tank Construction consisting of concrete foundation and precast element placement.	Residential Homes	400										
3	Tank Construction	Mon	Sat	Concrete Mixer	1	11%	Tank Construction consisting of concrete foundation and precast element placement.	Residential Homes	400										
4	Tank Construction	Mon	Sat	Crane	1	11%	Tank Construction consisting of concrete foundation and precast element placement.	Residential Homes	400										
5	Tank Construction	Mon	Sat	Loader	1	11%	Tank Construction consisting of concrete foundation and precast element placement.	Residential Homes	400										
1	Sewer & Water Crossing	Mon	Sat	Excavator	1	40%	Sewer and water crossing under Shell Road.	Residential Homes	150	77.6	77.6	85	75	65	65	2.1	1.6	N/A	No action required.
2	Sewer & Water Crossing	Mon	Sat	Off-Road Dump Truck	1	40%	Sewer and water crossing under Shell Road.	Residential Homes	150										
3	Sewer & Water Crossing	Mon	Sat	Roller	1	20%	Sewer and water crossing under Shell Road.	Residential Homes	150										
4	Sewer & Water Crossing	Mon	Sat	Dozer	1	40%	Sewer and water crossing under Shell Road.	Residential Homes	150										
5	Sewer & Water Crossing	Mon	Sat	Loader	1	40%	Sewer and water crossing under Shell Road.	Residential Homes	150										

* Values are calculated and actual data may vary. Developed using the Roadway Construction Noise Model (RCNM) developed by the Federal Highway Administration (FHWA), Version 1.1, 12/08/2008

SCALE: 1" = 60'

60 30 0 60'

REV	ISSUED FOR	DATE	BY

PROJECT ENGINEER: T. McPHERSON
DESIGNED BY: T. McPHERSON / C. LINK
DRAWN BY: M. BRANDT
CHECKED BY: T. McPHERSON
IF THIS BAR DOES NOT MEASURE 1" THEN DRAWING IS NOT TO FULL SCALE 0 1/2" 1"

Hazen
HAZEN AND SAWYER
4500 MAIN STREET, SUITE 500
VIRGINIA BEACH, VIRGINIA 23462
PHONE: 757 497-6460

CROWDER CONSTRUCTION COMPANY
CROWDER CONSTRUCTION COMPANY
1111 BURMA DRIVE
APEX, NORTH CAROLINA 27539
PHONE: 800-849-5449

VB City of Virginia Beach

HRSD

PROVIDENCE ROAD OFF-LINE
STORAGE FACILITY AND WOODSTOCK
PARK IMPROVEMENTS

PRECONSTRUCTION ASSESSMENT
AND DAMAGE MITIGATION PLAN
NOISE GENERATION AND IMPACTS
PHASE 1
EXCAVATION AND DEWATERING

DATE: AUGUST 2019
HAZEN NO.: 31419-000
FIGURE NO.
1.1

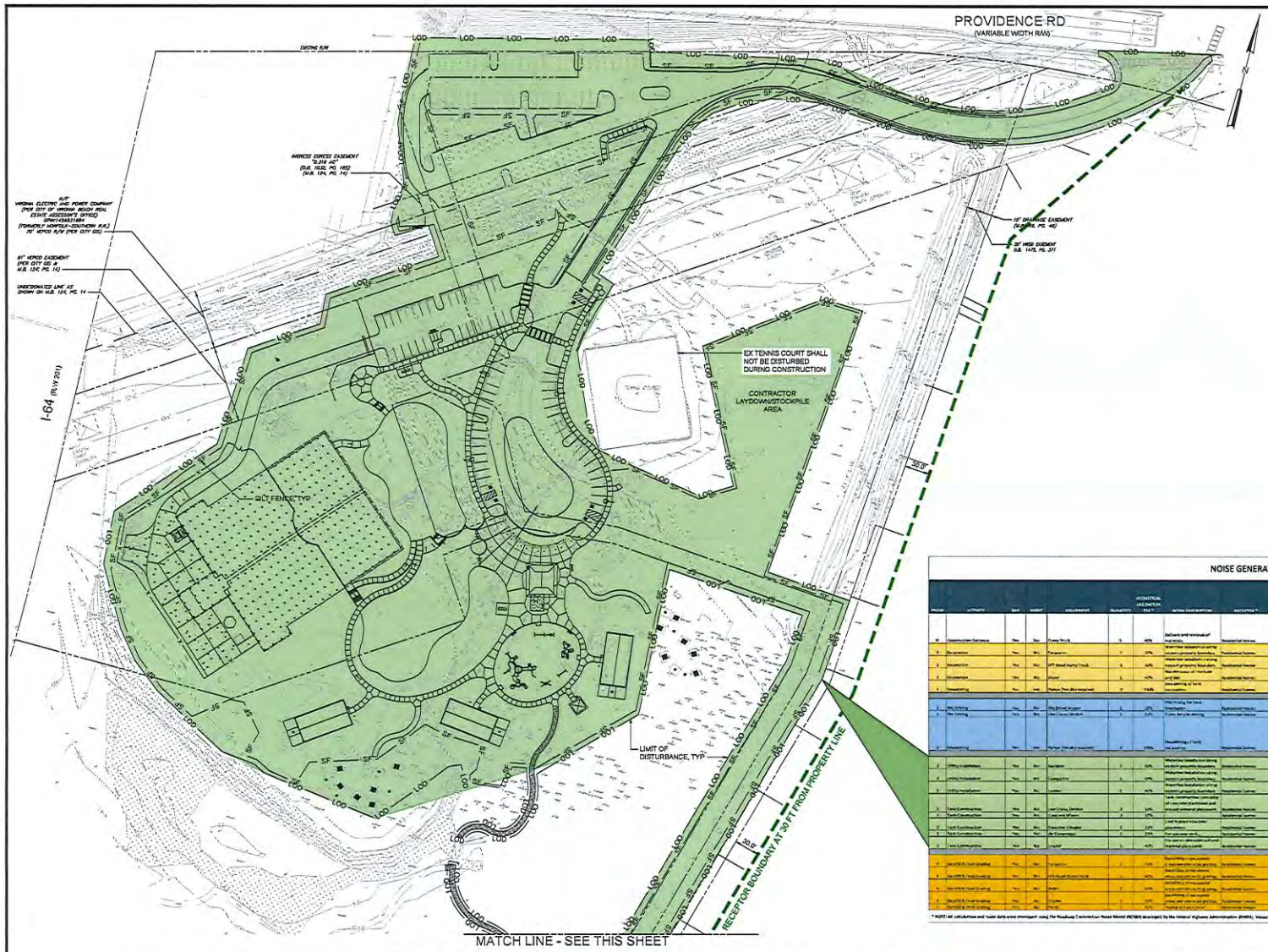

NOISE MONITORING NOTES:

1. CONTRACTOR SHALL MONITOR AND DOCUMENT BASELINE NOISE LEVELS AT THREE (3) OR MORE LOCATIONS NEAR THE IDENTIFIED RECEPTOR LOCATIONS DURING NON-WORKING PERIODS.
2. CONTRACTOR SHALL MONITOR AND DOCUMENT NOISE LEVELS AT THE SAME RECEPTOR LOCATIONS DURING THE PEAK ACTIVITY PERIOD.
3. CONTRACTOR SHALL USE A TYPE 2 / CLASS 2 SOUND LEVEL METER THAT MEETS OR EXCEEDS IEC 61672.

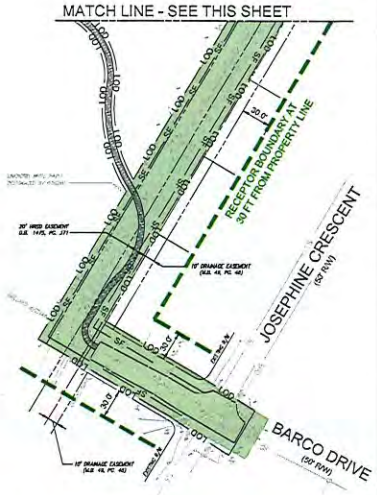

NOISE GENERATION AND IMPACTS

PHASE	ACTIVITY	DAY	NIGHT	EQUIPMENT	QUANTITY	ACOUSTICAL USAGE FACTOR (%) *	NOTES/DESCRIPTION	ACTIVITY *	DISTANCE TO RECEPTOR (FEET)	CONTINUOUS CALCULATED LEVEL * Leq	CONTINUOUS CALCULATED LEVEL * L10	LIMITS LEVEL (Day) * Leq	LIMITS LEVEL (Day) * L10	LIMITS LEVEL (Night) * Leq	LIMITS LEVEL (Night) * L10	DWELLING (Day) *	COMPARED CALCULATED ENVIRONMENT LEVEL * Max	Night	NOTES / ACTIONS
1	Construction Entrance	Yes	Yes	Pump Truck	1	40%	Delivery and removal of materials	Residential Homes	30	77.5	76.5	65	75	55	70	1	7.5	N/A	Exceedance is incident. Receptor in the residential property that faces Providence Road, therefore anticipated exceed baseline & need to be at or at working (in a prescribed noise level
1	Excavation	Yes	Yes	Excavator	1	57%	Maintain isolation along resident property boundary	Residential Homes	300										
1	Excavation	Yes	Yes	Off-Road Dump Truck	1	40%	Maintain isolation along resident property boundary	Residential Homes	170	77.2	75.6	65	75	55	70	1.2	7.6	N/A	No action required
1	Excavation	Yes	Yes	Dozer	1	40%	Maintenance of machine and idle	Residential Homes	120										
1	Dewatering	Yes	Yes	Pumps (No data required)	2	74.8%	Dewatering of tank excavation.	Residential Homes	500										
2	Pile Driving	Yes	Yes	Pile Driver (impact	1	20%	Pile driving for tank foundation	Residential Homes	500	77.4	75.4	65	75	55	70	1	No Exceedance	N/A	No action required
2	Pile Driving	Yes	Yes	Jet Hoist (Vibrator)	1	11%	Pump for pile driving	Residential Homes	400										
2	Dewatering	Yes	Yes	Pumps (No data required)	2	74.8%	Dewatering of tank foundation	Residential Homes	500	77.5	75.9	65	75	55	70	1.2	No Exceedance	7.9	Exceedance is incident. Consider application of an Acoustic Weather Shelter or other tool in other locations with acoustic ambient monitoring
2	Lining Installation	Yes	Yes	Welder	1	50%	Maintain isolation along resident property boundary	Residential Homes	50	74.2	73.0	65	75	55	70	1.0	3.0	N/A	Exceedance is minimal. Practice additional precaution will occur by placing tarpaulins and flexible storage tarps. Staff monitor personnel operating and potential installation of acoustic infrared equipment
2	Lining Installation	Yes	Yes	Compactor	1	20%	Maintain isolation along resident property boundary	Residential Homes	25	69.7	66.7	65	75	55	70	0.7	5.7	N/A	
2	Lining Installation	Yes	Yes	Welder	1	40%	Maintain isolation along resident property boundary	Residential Homes	50	74.5	73.0	65	75	55	70	1.0	4.0	N/A	
2	Tank Construction	Yes	Yes	Tank Lining Welder	2	50%	Tank construction consisting of concrete placement and precast removal of placement	Residential Homes	400										
2	Tank Construction	Yes	Yes	Concrete Mixer	1	57%		Residential Homes	400										
2	Tank Curbing Work	Yes	Yes	Concrete Chopper	1	20%	Cut to place concrete placement	Residential Homes	400	66.4	64.4	65	75	55	70	0.4	No Exceedance	N/A	
2	Tank Construction	Yes	Yes	Air Compressor	1	21%	For use near tank	Residential Homes	400										
2	Tank Curbing Work	Yes	Yes	Jackhammer	1	40%	For use in place of concrete and improper placement	Residential Homes	400										
4	Sewer & Transmission	Yes	Yes	Excavator	1	57%	Backfilling in progress	Residential Homes	120										
4	Sewer & Transmission	Yes	Yes	Off-Road Dump Truck	1	40%	Backfilling in progress	Residential Homes	120	77.1	77.1	65	75	55	70	1.0	No Exceedance	N/A	No action required
4	Sewer & Transmission	Yes	Yes	Roller	1	20%	Backfilling in progress	Residential Homes	120										
4	Sewer & Transmission	Yes	Yes	Loader	1	40%	Backfilling in progress	Residential Homes	120										
4	Sewer & Transmission	Yes	Yes	Pump	1	50%	Dewatering of excavation	Residential Homes	120										

* NOTE: All calculations and noise data were developed using the Roadway Construction Noise Model (RCNM) developed by the Federal Highway Administration (FHWA), Version 1.1, 12/08/2006

SCALE: 1" = 60'

60 30 0 60'

REV	ISSUED FOR	DATE	BY

PROJECT ENGINEER:	T. McPHERSON
DESIGNED BY:	T. McPHERSON / C. LINK
DRAWN BY:	M. BRANDT
CHECKED BY:	T. McPHERSON
IF THIS BAR DOES NOT MEASURE 1" THEN DRAWING IS NOT TO FULL SCALE	0 1/2" 1"

Hazen

HAZEN AND SAWYER
4500 MAIN STREET, SUITE 500
VIRGINIA BEACH, VIRGINIA 23462
PHONE: 757 497-0490

CROWDER CONSTRUCTION COMPANY

CROWDER CONSTRUCTION COMPANY
1111 BURMA DRIVE
APEX, NORTH CAROLINA 27530
PHONE: 800-849-6449

City of Virginia Beach

HRSD

PROVIDENCE ROAD OFF-LINE
STORAGE FACILITY AND WOODSTOCK
PARK IMPROVEMENTS

PRECONSTRUCTION ASSESSMENT
AND DAMAGE MITIGATION PLAN
NOISE GENERATION AND IMPACTS
PHASE 3
UTILITY AND TANK CONSTRUCTION

DATE:	AUGUST 2019
HAZEN NO.:	31419-000
FIGURE NO.	1.3

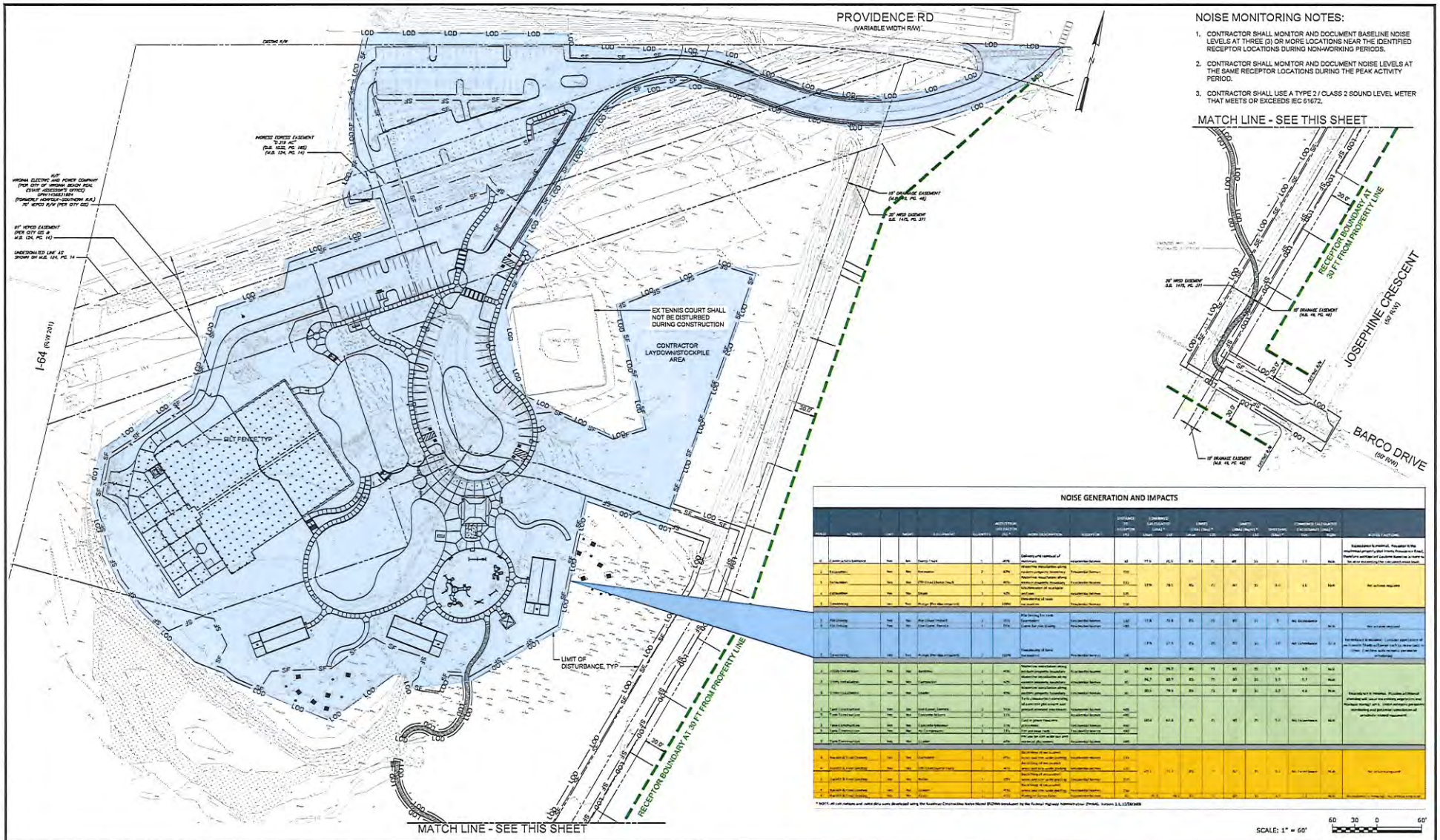

NOISE MONITORING NOTES:

1. CONTRACTOR SHALL MONITOR AND DOCUMENT BASELINE NOISE LEVELS AT THREE (3) OR MORE LOCATIONS NEAR THE IDENTIFIED RECEPTOR LOCATIONS DURING NON-WORKING PERIODS.
2. CONTRACTOR SHALL MONITOR AND DOCUMENT NOISE LEVELS AT THE SAME RECEPTOR LOCATIONS DURING THE PEAK ACTIVITY PERIOD.
3. CONTRACTOR SHALL USE A TYPE 2 / CLASS 2 SOUND LEVEL METER THAT MEETS OR EXCEEDS IEC 61672.

NOISE GENERATION AND IMPACTS

PHASE	ACTIVITY	UNIT	NAME	EQUIPMENT	QUANTITY	ADDITIONAL USE FACTOR (%)	WORK DESCRIPTION	RECEPTOR	DISTANCE TO RECEPTOR (FT)	CONSERVATIVE CALCULATED LEVEL * (dBA)		LIMITS LEVEL (dBA) *		LIMITS LEVEL (dBA) *		CONSERVATIVE CALCULATED EXCEEDANCE LEVEL *		NOTES/ FACTORS
										Leq	Lmax	Leq	Lmax	Leq	Lmax	Leq	Lmax	
1	Construction Equipment	Year	Sam	Dump Truck	1	40%	Delivery and removal of equipment	Residential Homes	40	77.6	82.6	85	90	85	90	0.0	N/A	Equipment is minimal. However is the maximum property line limit from Providence Road, therefore workers of Lucente Avenue is more to be at or exceeding the concerned noise level
2	Excavation	Year	Mar	Excavator	2	40%	Excavation equipment utilizing excavation equipment. Excavating equipment. Excavating equipment. Excavating equipment.	Residential Homes	100	72.6	78.6	85	90	85	90	0.0	N/A	No actions required
3	Excavation	Year	Mar	Off-Road Dump Truck	1	40%		Residential Homes	100									
4	Excavation	Year	Mar	Dozer	1	40%		Residential Homes	100									
5	Concreting	Year	Mar	Mixer (for discharge)	2	100%	Concreting of tank	Residential Homes	100									
1	Pile Driving	Year	Mar	Pile Driver Impact	1	20%	Pile Driving for tank foundation	Residential Homes	100	72.6	78.6	85	90	85	90	No Exceedance	N/A	No actions required
2	Pile Driving	Year	Mar	Pile Driver Vibratory	1	20%		Residential Homes	100									
3	Concreting	Year	Mar	Mixer (for discharge)	2	100%	Concreting of tank foundation	Residential Homes	100	77.6	82.6	85	90	85	90	No Exceedance	N/A	Not applicable because the concrete pour is not a continuous process. Consider application of an Outside Noise Variance (with its noise level in mind). Facilitate with noise barrier or other
1	Utility Installation	Year	Mar	Backhoe	1	40%	Backhoe equipment utilizing excavation equipment. Excavating equipment. Excavating equipment. Excavating equipment.	Residential Homes	40	78.6	78.7	85	90	85	90	0.0	N/A	Potentially will be intrusive. Provide additional shielding with use of the existing vegetation and Hydraulic Hammer arm. Utilize adequate personnel monitoring and personal protection of productive related equipment.
2	Utility Installation	Year	Mar	Compactor	1	40%		Residential Homes	40	76.7	82.7	85	90	85	90	0.0	N/A	
3	Utility Installation	Year	Mar	Loader	1	40%		Residential Homes	40	80.6	78.6	85	90	85	90	4.6	N/A	
1	Land Construction	Year	Mar	Land Clearer (Mower)	2	75%	Tank construction consisting of excavation plus concrete and asphalt pavement installation	Residential Homes	400	68.6	64.6	85	90	85	90	No Exceedance	N/A	
2	Tank Construction	Year	Mar	Concrete Saws	1	20%		Residential Homes	400									
3	Tank Construction	Year	Mar	Concrete Mixer	1	20%	Land or grass measures installation	Residential Homes	400									
4	Tank Construction	Year	Mar	Compactor (Roller)	1	20%	Tank and wear tank	Residential Homes	400									
5	Tank Construction	Year	Mar	Loader	1	40%	Pile jaw for site water and other material disposal	Residential Homes	400									
6	Hauling & Road Grading	Year	Mar	Excavator	1	40%	Backhoe or excavator equipment utilizing excavation equipment. Excavating equipment.	Residential Homes	100	71.6	71.6	85	-	85	90	No Exceedance	N/A	No actions required
7	Hauling & Road Grading	Year	Mar	Off-Road Dump Truck	1	40%		Residential Homes	100									
8	Hauling & Road Grading	Year	Mar	Roller	1	20%		Residential Homes	100									
9	Hauling & Road Grading	Year	Mar	Grader	1	40%		Residential Homes	100									
10	Hauling & Road Grading	Year	Mar	Dozer	1	40%		Residential Homes	100									
11	Hauling & Road Grading	Year	Mar	Pavers	1	20%		Residential Homes	100									

* NOTE: All calculations and noise data were developed using the Roadway Construction Noise Model (RCNM) developed by the Federal Highway Administration (FHWA), Version 1.1, 11/28/2005

F:\CIVIL\PROJECTS\PROVIDENCE ROAD OFF-LINE STORAGE FACILITY AND WOODSTOCK PARK IMPROVEMENTS\CONSTRUCTION\PHASE 2 PILE DRIVING\PROVIDENCE ROAD OFF-LINE STORAGE FACILITY AND WOODSTOCK PARK IMPROVEMENTS - PHASE 2 PILE DRIVING.DWG
Plotted by: Brandt, Matthew 10/15/2019 8:14 AM
Layout: 1.2

REV	ISSUED FOR	DATE	BY

PROJECT ENGINEER:	T. McPHERSON
DESIGNED BY:	T. McPHERSON / C. LINK
DRAWN BY:	M. BRANDT
CHECKED BY:	T. McPHERSON
IF THIS BAR DOES NOT MEASURE 1" THEN DRAWING IS NOT TO FULL SCALE	0 1/2" 1"

Hazen
HAZEN AND SAWYER
4500 MAIN STREET, SUITE 500
VIRGINIA BEACH, VIRGINIA 23462
PHONE: 757 497-0450

CROWDER CONSTRUCTION COMPANY
CROWDER CONSTRUCTION COMPANY
1111 BURMA DRIVE
APEX, NORTH CAROLINA 27539
PHONE: 800-849-5449

City of Virginia Beach

HRSD

PROVIDENCE ROAD OFF-LINE STORAGE FACILITY AND WOODSTOCK PARK IMPROVEMENTS

PRECONSTRUCTION ASSESSMENT AND DAMAGE MITIGATION PLAN
NOISE GENERATION AND IMPACTS
PHASE 2
PILE DRIVING

DATE:	AUGUST 2019
HAZEN NO.:	31419-000
FIGURE NO.	1.2

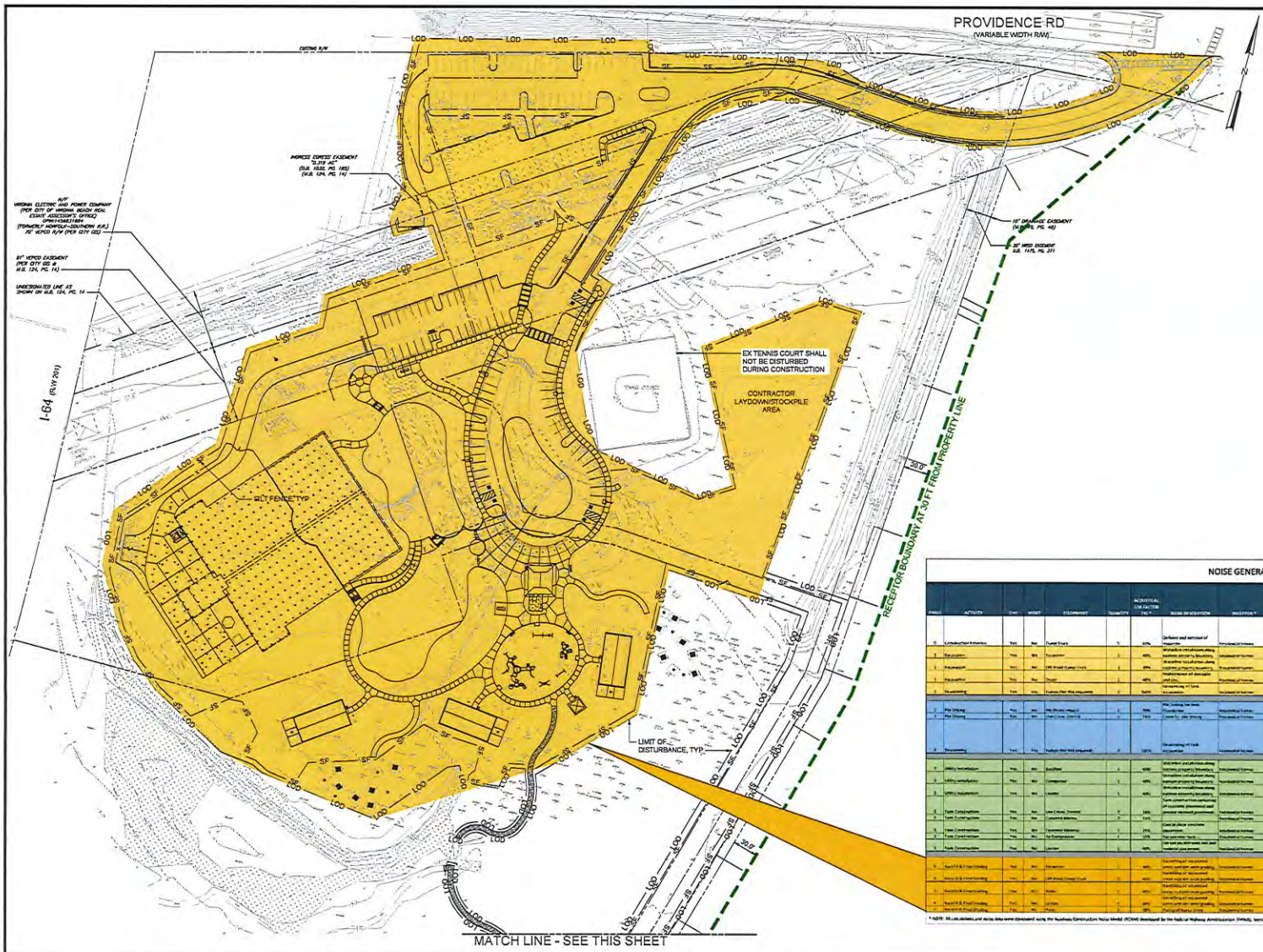

NOISE MONITORING NOTES:

1. CONTRACTOR SHALL MONITOR AND DOCUMENT BASELINE NOISE LEVELS AT THREE (3) OR MORE LOCATIONS NEAR THE IDENTIFIED RECEPTOR LOCATIONS DURING NON-WORKING PERIODS.
2. CONTRACTOR SHALL MONITOR AND DOCUMENT NOISE LEVELS AT THE SAME RECEPTOR LOCATIONS DURING THE PEAK ACTIVITY PERIOD.
3. CONTRACTOR SHALL USE A TYPE 2 / CLASS 2 SOUND LEVEL METER THAT MEETS OR EXCEEDS IEC 61672.

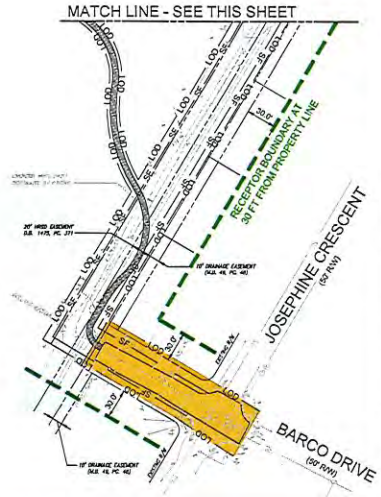

NOISE GENERATION AND IMPACTS

PHASE	ACTIVITY	UNIT	MONT	EQUIPMENT	QUANTITY	ACOUSTICAL USE FACTOR (%) *	NAME OF ACTIVITY	RECEPTOR *	DISTANCE TO RECEPTOR (FT)	CALCULATED DBA(A) * Leq	CALCULATED DBA(A) * L10	LIMITS DBA(A) Leq	LIMITS DBA(A) L10	LIMITS DBA(A) Lmax	MAX LEVEL (Lmax) *	COMPARED LIMITS DBA(A) * Leq	COMPARED LIMITS DBA(A) * L10	NOTES / ACTIONS
0	Construction Entrance	Yes	Mar	Dump truck	1	40%	Delivery and removal of materials	Residential homes	25	72.9	76.9	75	75	80	75	1	1.9	N/A	Precaution is minimal. Because it is the residential periods that have the most noise, therefore anticipated Qualifier Receptor is likely to be not as annoying. See contractor's noise level
1	Excavation	Yes	Mar	Excavator	1	40%	Vegetation removal, grubbing, excavation, grading, trenching	Residential homes	300									
1	Excavation	Yes	Mar	Off-Road Dump Truck	1	40%	Vegetation removal, grubbing, excavation, grading, trenching	Residential homes	130	72.9	76.9	75	75	80	75	2.9	1.9	N/A	No action required
1	Excavation	Yes	Mar	Dozer	1	40%	Vegetation removal, grubbing, excavation, grading, trenching	Residential homes	130									
1	Excavation	Yes	Mar	Hydraulic Hoe (Big equipment)	2	50%	Vegetation removal, grubbing, excavation, grading, trenching	Residential homes	300									
2	Pile Driving	Yes	Mar	Pile Driver Impact	1	70%	Pile driving (see Note 1)	Residential homes	130	77.9	79.9	85	75	90	75	1	Not Applicable	N/A	No action required
2	Pile Driving	Yes	Mar	Pile Driver (Vibratory)	1	70%	Pile driving (see Note 1)	Residential homes	300									
3	Paving	Yes	Mar	Hydraulic Hoe (Big equipment)	2	50%	Paving (including hot mix asphalt)	Residential homes	300	72.9	76.9	85	75	90	75	3.9	Not Applicable	2.9	Excavation is minimal. Consider scheduling of the Hydraulic Hoe during the non-peak hours or other. If neither are possible, inform contractor of potential noise issues
7	Utility Installation	Yes	Mar	Backhoe	1	40%	Trenching, backfilling, compaction along approach property boundary	Residential homes	25	79.0	78.9	85	75	80	75	3.0	1.2	N/A	Requirement is minimal. Possible additional planting and noise via existing vegetation and temporary storage area. Avoid nuisance generating machinery and potential remediation of potential critical equipment.
7	Utility Installation	Yes	Mar	Compactor	1	40%	Trenching, backfilling, compaction along approach property boundary	Residential homes	30	66.7	69.7	85	75	80	75	3.0	1.7	N/A	
7	Utility Installation	Yes	Mar	Loader	1	40%	Trenching, backfilling, compaction along approach property boundary	Residential homes	30	65.0	79.0	85	75	80	75	3.0	4.0	N/A	
8	Tank Construction	Yes	Mar	Low Clearance Forklift	2	50%	Tank construction, compaction of concrete, placement and general equipment movement	Residential homes	400									
8	Tank Construction	Yes	Mar	Concrete Mixer	1	50%		Residential homes	400									
8	Tank Construction	Yes	Mar	Concrete Vibrator	1	20%	Cast-in-place concrete placement	Residential homes	400	68.4	65.4	85	75	80	75	3.0	Not Applicable	N/A	
8	Tank Construction	Yes	Mar	Crane	1	16%	Tank construction, hoist	Residential homes	400									
8	Tank Construction	Yes	Mar	Air Compressor	1	40%	Air tank delivered and used for material blow down	Residential homes	400									
9	Backfill & Final Grading	Yes	Mar	Excavator	1	40%	Backfilling of excavated areas and final grading	Residential homes	130									
9	Backfill & Final Grading	Yes	Mar	Off-Road Dump Truck	1	40%	Backfilling of excavated areas and final grading	Residential homes	130	66.1	72.1	85	75	80	75	3.0	Not Applicable	N/A	No action required
9	Backfill & Final Grading	Yes	Mar	Roller	1	40%	Backfilling of excavated areas and final grading	Residential homes	130									
9	Backfill & Final Grading	Yes	Mar	Grader	1	40%	Backfilling of excavated areas and final grading	Residential homes	130									
9	Backfill & Final Grading	Yes	Mar	Dozer	1	40%	Backfilling of excavated areas and final grading	Residential homes	130	74.2	75.2	85	75	80	75	3.0	2.2	N/A	Requirement is minimal. See Dozer Note

* NOTE: All calculations and data were generated using the Roadway Construction Noise Model (RCNM) developed by the Federal Highway Administration (FHWA), Version 1.1, 12/08/2006

SCALE: 1" = 60'

60 30 0 60'

REV	ISSUED FOR	DATE	BY

PROJECT ENGINEER:	T. McPHERSON
DESIGNED BY:	T. McPHERSON / C. LINK
DRAWN BY:	M. BRANDT
CHECKED BY:	T. McPHERSON
IF THIS BAR DOES NOT MEASURE 1" THEN DRAWING IS NOT TO FULL SCALE	0 1/2" 1"

Hazen

HAZEN AND SAWYER
4500 MAIN STREET, SUITE 500
VIRGINIA BEACH, VIRGINIA 23462
PHONE: 757 497-0490

CROWDER CONSTRUCTION COMPANY

CROWDER CONSTRUCTION COMPANY
1111 BURMA DRIVE
APEX, NORTH CAROLINA 27539
PHONE: 800-849-5449

City of Virginia Beach

HRSD

PROVIDENCE ROAD OFF-LINE STORAGE FACILITY AND WOODSTOCK PARK IMPROVEMENTS

PRECONSTRUCTION ASSESSMENT AND DAMAGE MITIGATION PLAN
NOISE GENERATION AND IMPACTS
PHASE 4
BACKFILL & FINAL GRADING

DATE:	AUGUST 2019
HAZEN NO.:	31419-000
FIGURE NO.	1.4

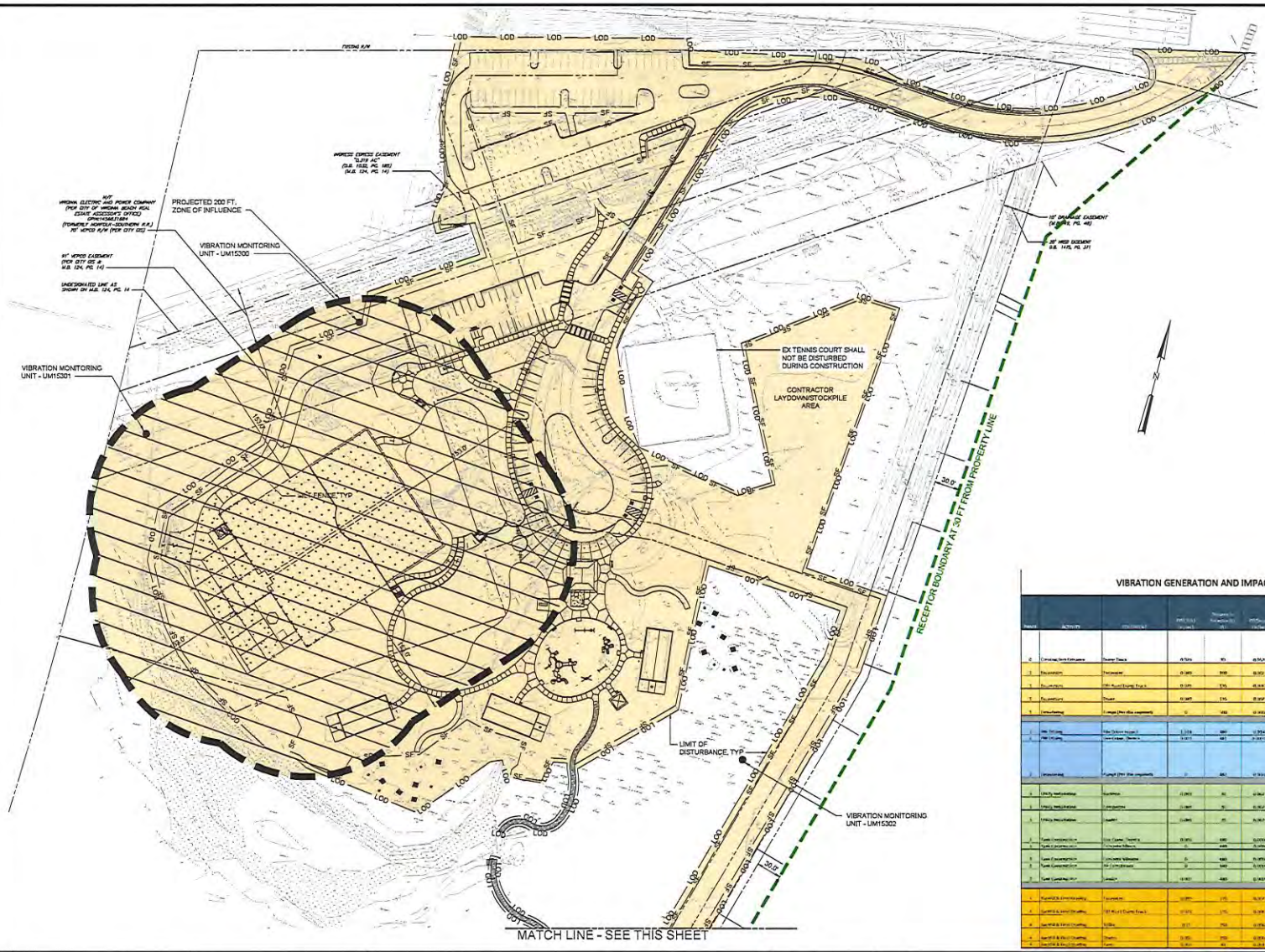

VIBRATION MONITORING NOTES:

CONTRACTOR SHALL PREPARE A VIBRATION MONITORING PLAN PER SPECIFICATION SECTION 02367, THE PLAN SHALL INCLUDE:

- PHOTO DOCUMENT THE CONDITION OF ALL SITE STRUCTURES WITHIN THE PROJECTED 200 FT. ZONE OF INFLUENCE THAT WILL REMAIN DURING CONSTRUCTION IN PARTICULAR DOCUMENTATION OF THE EXISTING DOMINION ENERGY STRUCTURES.
- MONITOR AND DOCUMENT BASELINE VIBRATION LEVELS AT THREE (3) OR MORE LOCATIONS NEAR THE IDENTIFIED RECEPTOR BOUNDARY DURING NON-WORKING PERIODS.
- MONITOR AND DOCUMENT VIBRATION LEVELS AT THE SAME RECEPTOR LOCATIONS DURING THE PEAK ACTIVITY PERIOD.

MATCH LINE - SEE THIS SHEET

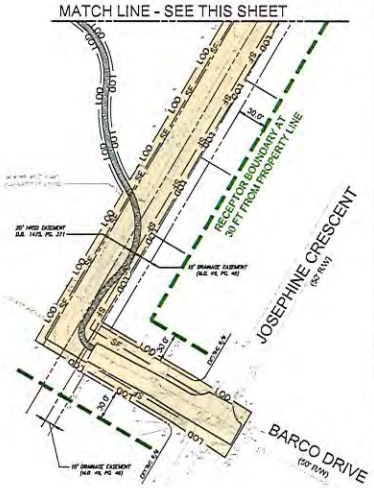

VIBRATION GENERATION AND IMPACTS

Phase	Activity	Equipment	Peak Vibration (in/sec)	Distance to Receptor (ft)	PPV Decay Factor	Notes / Actions
0	Construction Entrance	Dump Truck	0.076	10	0.70,1.0	Structures not very safe to buildings
1	Excavation	Excavator	0.089	100	0.3,0.1	Rarely perceptible
1	Excavation	950 Rubber Tired Dozer	0.089	175	0.3,0.1	Rarely perceptible
1	Excavation	Dozer	0.089	175	0.3,0.1	Rarely perceptible
1	Demolition	Crusher (Per site equipment)	0	100	0.3,0.1	Never audible
2	Site Grading	Site Dozer (Scraper)	0.089	100	0.3,0.1	Structures not very safe to buildings
2	Site Grading	Dump Truck - Remote	0.076	100	0.3,0.1	Never audible
2	Stockpiling	Pumper (Per site equipment)	0	100	0.3,0.1	Never audible
3	Utility Installation	Backhoe	0.089	50	0.3,0.1	Rarely perceptible but very safe to buildings
3	Utility Installation	Vibratory	0.089	50	0.3,0.1	Rarely perceptible but very safe to buildings
3	Utility Installation	Loader	0.089	25	0.3,0.1	Rarely perceptible but very safe to buildings
3	Tank Construction	Dump Truck - Remote	0.076	100	0.3,0.1	Never audible
3	Tank Construction	Concrete Mixer	0	100	0.3,0.1	Never audible
3	Tank Construction	Concrete Vibrator	0	100	0.3,0.1	Never audible
3	Tank Construction	Air Compressor	0	100	0.3,0.1	Never audible
3	Tank Construction	Loader	0.089	100	0.3,0.1	Rarely perceptible
4	Tank/ICS Construction	Excavator	0.089	175	0.3,0.1	Rarely perceptible
4	Grading & Final Grading	950 Rubber Tired Dozer	0.089	175	0.3,0.1	Rarely perceptible
4	Grading & Final Grading	Roller	0.21	175	0.3,0.1	Rarely perceptible
4	Grading & Final Grading	Grader	0.089	175	0.3,0.1	Never audible
4	Grading & Final Grading	Paver	0.089	175	0.3,0.1	Never audible

SCALE: 1" = 60'

60 30 0 60'

REV	ISSUED FOR	DATE	BY

PROJECT ENGINEER:	T. McPHERSON
DESIGNED BY:	T. McPHERSON / C. LINK
DRAWN BY:	M. BRANDT
CHECKED BY:	T. McPHERSON
IF THIS BAR DOES NOT MEASURE 1" THEN DRAWING IS NOT TO FULL SCALE	0 1/2" 1"

Hazen

HAZEN AND SAWYER
4500 MAIN STREET, SUITE 500
VIRGINIA BEACH, VIRGINIA 23462
PHONE: 757 497-0460

CROWDER CONSTRUCTION COMPANY

CROWDER CONSTRUCTION COMPANY
1111 BURMA DRIVE
APEX, NORTH CAROLINA 27539
PHONE: 800-849-5449

City of Virginia Beach

HRSD

PROVIDENCE ROAD OFF-LINE STORAGE FACILITY AND WOODSTOCK PARK IMPROVEMENTS

PRECONSTRUCTION ASSESSMENT AND DAMAGE MITIGATION PLAN
VIBRATION IMPACTS

DATE:	AUGUST 2019
HAZEN NO.:	31419-000
FIGURE NO.	2

NOTES:

1. DEWATERING CONTOURS ARE SHOWN IN RED AND REPRESENT GROUND WATER DRAW DOWN IN FEET FROM EXISTING GROUNDWATER LEVELS.
2. CONTRACTOR SHALL PLACE SETTLEMENT MONUMENTS FOR TRACKING ELEVATION CHANGES AND MONITOR/DOCUMENT AT REGULAR INTERVALS.
3. SHOULD DEWATERING RELATED SETTLEMENT BECOME EVIDENT, CONTRACTOR SHALL PROVIDE A PLAN FOR REMEDIATION.

CONTOUR LINE	ESTIMATED TOTAL SETTLEMENT (IN.)
18 FEET	3 TO 5 INCHES
12 FEET	2 TO 3 INCHES
6 FEET	1 TO 2 INCHES
2 FEET	LESS THAN 1 INCH

SCALE: 1" = 90'

90 45 0 90'

REV	ISSUED FOR	DATE	BY

PROJECT ENGINEER: T. McPHERSON
DESIGNED BY: T. McPHERSON / C. LINK
DRAWN BY: M. BRANDT
CHECKED BY: T. McPHERSON
IF THIS BAR DOES NOT MEASURE 1" THEN DRAWING IS NOT TO FULL SCALE 0 1/2" 1"

Hazen
HAZEN AND SAWYER
4500 MAIN STREET, SUITE 500
VIRGINIA BEACH, VIRGINIA 23462
PHONE: 757 497-0490

CROWDER CONSTRUCTION COMPANY
CROWDER CONSTRUCTION COMPANY
1111 BURMA DRIVE
APEX, NORTH CAROLINA 27539
PHONE: 800-849-5449

City of Virginia Beach

HRSD

PROVIDENCE ROAD OFF-LINE STORAGE FACILITY AND WOODSTOCK PARK IMPROVEMENTS

PRECONSTRUCTION ASSESSMENT AND DAMAGE MITIGATION PLAN DEWATERING IMPACTS

DATE: AUGUST 2019
HAZEN NO.: 31419-000
FIGURE NO. 3

Appendix B: Figures

U.S. Department
of Transportation

**Federal Highway
Administration**

FHWA
Roadway Construction Noise Model
User's Guide

FHWA-HEP-05-054
DOT-VNTSC-FHWA-05-01

Final Report
January 2006

Prepared for
U.S. Department of Transportation
Federal Highway Administration
Office of Environment and Planning
Washington, DC 20590

Prepared by
U.S. Department of Transportation
Research and Innovative Technology Administration
John A. Volpe National Transportation Systems Center
Acoustics Facility
Cambridge, MA 02142

NOTICE

This document is disseminated under the sponsorship of the Department of Transportation in the interest of information exchange. The United States Government assumes no liability for its contents or use thereof. This report does not constitute a standard, specification, or regulation.

The United States Government does not endorse products or manufacturers. Trade or manufacturers' names appear herein solely because they are considered essential to the object of this document.

REPORT DOCUMENTATION PAGE

Form Approved
OMB No. 0704-0188

Public reporting burden for this collection of information is estimated to average 1 hour per response, including the time for reviewing instructions, searching existing data sources, gathering and maintaining the data needed, and completing and reviewing the collection of information. Send comments regarding this burden estimate or any other aspect of this collection of information, including suggestions for reducing this burden, to Washington Headquarters Services, Directorate for Information Operations and Reports, 1215 Jefferson Davis Highway, Suite 1204, Arlington, VA 22202-4302, and to the Office of Management and Budget, Paperwork Reduction Project (0704-0188), Washington, DC 20503.

1. AGENCY USE ONLY (Leave blank)	2. REPORT DATE January 2006	3. REPORT TYPE AND DATES COVERED Final Report January 2004-January 2006
4. TITLE AND SUBTITLE FHWA Roadway Construction Noise Model, Version 1.0 User's Guide		5. FUNDING NUMBERS HW-66/CS036
6. AUTHOR(S) Reherman, Clay N.[3], Rochat, Judith L.[3], Thalheimer, Erich S.[2], Lau, Michael C.[3], Fleming, Gregg G.[3], Ferroni, Mark[1], Corbisier, Christopher[1]		
7. PERFORMING ORGANIZATION NAME(S) AND ADDRESS(ES) U.S. Department of Transportation Research and Innovative Technology Administration John A. Volpe National Transportation Systems Center Environmental Measurement and Modeling Division, DTS-34 Cambridge, MA 02142		8. PERFORMING ORGANIZATION REPORT NUMBER DOT-VNTSC-FHWA-05-01
9. SPONSORING/MONITORING AGENCY NAME(S) AND ADDRESS(ES) U.S. Department of Transportation Federal Highway Administration Office of Environment and Planning Washington, DC 20590		10. SPONSORING/MONITORING AGENCY REPORT NUMBER FHWA-HEP-05-054

11. SUPPLEMENTARY NOTES

(1) U.S. Department of Transportation Federal Highway Administration Office of Environment and Planning Washington, DC 20590	(2) Parsons Brinckerhoff Quade & Douglas Inc. 75 Arlington St. Boston, MA 02116	(3) U.S. Department of Transportation Research and Innovative Technology Administration John A. Volpe National Transportation Systems Center Environmental Measurement and Modeling Division Cambridge, MA 02142

12a. DISTRIBUTION/AVAILABILITY STATEMENT This document is available to the public through the National Technical Information Service, Springfield, VA 22161	12b. DISTRIBUTION CODE

13. ABSTRACT (Maximum 200 words)

The Roadway Construction Noise Model (RCNM) is the Federal Highway Administration's (FHWA) national model for the prediction of construction noise. Due to the fact that construction is often conducted in close proximity to residences and businesses, construction noise must be controlled and monitored to avoid impacts on surrounding communities. In addition to community issues, excessive noise can threaten a construction projects' progress. Each project needs to balance the community's need for peace and quiet with the contractor's need to progress the work.

During the Central Artery/Tunnel (CA/T) project in Boston, Massachusetts, the project's noise control program developed the Construction Noise Control Specification 721.560, the most comprehensive noise specification ever developed in the United States. As part of the CA/T project noise control program, a construction noise prediction spreadsheet was developed. Because the CA/T prediction tool can benefit other state and local governments, the FHWA developed the RCNM, which is based on the noise prediction calculations and equipment database used in the CA/T prediction spreadsheet. The RCNM provides a construction noise screening tool to easily predict construction noise levels and determine compliance with noise limits for a variety of construction noise projects of varying complexity.

14. SUBJECT TERMS construction noise, noise levels, dBA, noise models, community impact, Federal Highway Administration	15. NUMBER OF PAGES 30
	16. PRICE CODE

17. SECURITY CLASSIFICATION OF REPORT Unclassified	18. SECURITY CLASSIFICATION OF THIS PAGE Unclassified	19. SECURITY CLASSIFICATION OF ABSTRACT Unclassified	20. LIMITATION OF ABSTRACT Unlimited

NSN 7540-01-280-5500

Standard Form 298(Rev. 2-89)
Prescribed by ANSI Std. 239-18 298-102

METRIC/ENGLISH CONVERSION FACTORS

ENGLISH TO METRIC

LENGTH (APPROXIMATE)

1 inch (in)	=	2.5 centimeters (cm)
1 foot (ft)	=	30 centimeters (cm)
1 yard (yd)	=	0.9 meter (m)
1 mile (mi)	=	1.6 kilometers (km)

AREA (APPROXIMATE)

1 square inch (sq in, in^2)	=	6.5 square centimeters (cm^2)
1 square foot (sq ft, ft^2)	=	0.09 square meter (m^2)
1 square yard (sq yd, yd^2)	=	0.8 square meter (m^2)
1 square mile (sq mi, mi^2)	=	2.6 square kilometers (km^2)
1 acre = 0.4 hectare (he)	=	4,000 square meters (m^2)

MASS – WEIGHT (APPROXIMATE)

1 ounce (oz)	=	28 grams (gm)
1 pound (lb)	=	0.45 kilogram (kg)
1 short ton = 2,000 pounds (lb)	=	0.9 tonne (t)

VOLUME (APPROXIMATE)

1 teaspoon (tsp)	=	5 milliliters (ml)
1 tablespoon (tbsp)	=	15 milliliters (ml)
1 fluid ounce (fl oz)	=	30 milliliters (ml)
1 cup ©	=	0.24 liter (l)
1 pint (pt)	=	0.47 liter (l)
1 quart (qt)	=	0.96 liter (l)
1 gallon (gal)	=	3.8 liters (l)
1 cubic foot (cu ft, ft^3)	=	0.03 cubic meter (m^3)
1 cubic yard (cu yd, yd^3)	=	0.76 cubic meter (m^3)

TEMPERATURE (EXACT)

[(x-32)(5/9)] °F = y °C

METRIC TO ENGLISH

LENGTH (APPROXIMATE)

1 millimeter (mm)	=	0.04 inch (in)
1 centimeter (cm)	=	0.4 inch (in)
1 meter (m)	=	3.3 feet (ft)
1 meter (m)	=	1.1 yards (yd)
1 kilometer (km)	=	0.6 mile (mi)

AREA (APPROXIMATE)

1 square centimeter (cm^2)	=	0.16 square inch (sq in, in^2)
1 square meter (m^2)	=	1.2 square yards (sq yd, yd^2)
1 square kilometer (km^2)	=	0.4 square mile (sq mi, mi^2)
10,000 square meters (m^2)	=	1 hectare (ha) = 2.5 acres

MASS – WEIGHT (APPROXIMATE)

1 gram (gm)	=	0.036 ounce (oz)
1 kilogram (kg)	=	2.2 pounds (lb)
1 tonne (t)	=	1,000 kilograms (kg)
	=	1.1 short tons

VOLUME (APPROXIMATE)

1 milliliter (ml)	=	0.03 fluid ounce (fl oz)
1 liter (l)	=	2.1 pints (pt)
1 liter (l)	=	1.06 quarts (qt)
1 liter (l)	=	0.26 gallon (gal)
1 cubic meter (m^3)	=	36 cubic feet (cu ft, ft^3)
1 cubic meter (m^3)	=	1.3 cubic yards (cu yd, yd^3)

TEMPERATURE (EXACT)

[(9/5) y + 32] °C = x °F

QUICK INCH - CENTIMETER LENGTH CONVERSION

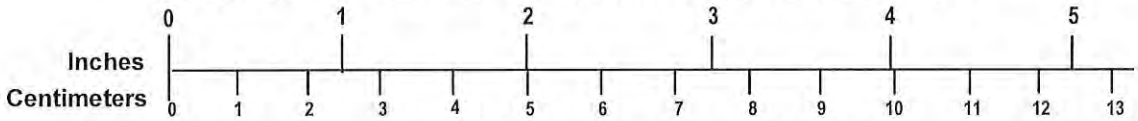

QUICK FAHRENHEIT - CELSIUS TEMPERATURE CONVERSION

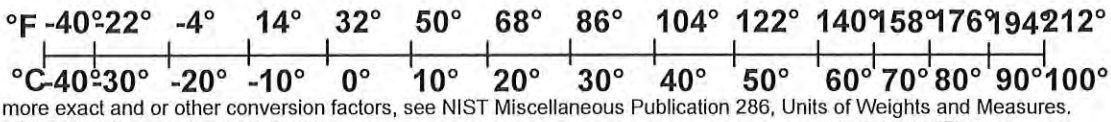

For more exact and or other conversion factors, see NIST Miscellaneous Publication 286, Units of Weights and Measures. Price $2.50 SD Catalog No. C13 10286.

Updated 6/17/98

Table of Contents

Section Page

Table of Contents i
List of Figures ii
List of Tables iii
1 Introduction 1
2 Background 2
3 The RCNM 4
3.1 RCNM Main Page 4
3.1.1 File Menu 5
3.1.2 Edit Menu 5
3.1.3 View Menu 6
3.1.4 Options Menu 6
3.1.5 Help Menu 8
3.2 Input Data 8
3.2.1 Receptors 8
3.2.2 Equipment 9
3.2.3 Noise Metric and Noise Limit Criteria 10
4 Results 18
5 Calculations in the RCNM 20
5.1 Metric Calculation 20
5.2 Exceedance Calculation 20
5.3 Totals Calculation 21
6 References 22
Appendix A: Best Practices for Calculating
Estimated Shielding for Use in the RCNM A-1

List of Figures

Figure Page

1. The RCNM main page 4
2. <File> Menu 5
3. <Edit> Menu 5
4. <View> Menu 6
5. <Options> menu 6
6. Equipment list modification dialogue box 7
7. Units modification pull-down menu 8
8. Equipment dialogue box, with pull-down menu shown 9
9. Noise Metric pull-down menu 10
10. Noise Limit Criteria pop-up dialogue box 11
11. The Noise Limit Criteria "Clear" command button 12
12. Noise Limit Criteria pull-down menu 13
13. Noise Limit Criteria "Value" dialogue box 13
14. Noise Limit Criteria "Maximum" dialogue box 14
15. Noise Limit Criteria "Baseline +" dialogue box 14
16. Noise Limit Criteria "Conditional" dialogue box 15
17. L10 Adjustment dialogue box 16
18. Noise Limits display window 16
19. The RCNM main-page Results display 18

List of Tables

Table Page

1. CA/T equipment noise emissions and acoustical usage factors database..... 3
2. Default Noise Limit Criteria 11

1 Introduction

The Roadway Construction Noise Model (RCNM) is the Federal Highway Administration's (FHWA) national model for the prediction of construction noise. Due to the fact that construction is often conducted in close proximity to residences and businesses, construction noise must be controlled and monitored to avoid impacts on surrounding communities. In addition to community issues, excessive noise can threaten a construction project's progress. Each project needs to balance the community's need for peace and quiet with the contractor's need to progress the work.

The Central Artery/Tunnel (CA/T) project in Boston, Massachusetts, which began in the early 1990s, is the largest urban construction project ever conducted in the United States. Its noise control program developed the Construction Noise Control Specification 721.560, the most comprehensive noise specification ever developed in the United States [1]. As part of the CA/T project noise control program, a construction noise prediction spreadsheet was developed [2]. Because the CA/T prediction tool can benefit other state and local governments, the FHWA developed the RCNM, which is based on the noise prediction calculations and the equipment database used in the CA/T prediction spreadsheet. The RCNM provides a construction noise screening tool to easily predict construction noise levels and to determine compliance with noise limits for a variety of construction noise projects of varying complexity.

2 Background

The RCNM is a national model based on the noise calculations and extensive construction noise data compiled for the CA/T Project. The basis for the national model is a spreadsheet tool developed in support of the CA/T project [2]. The CA/T predictions originated from Environmental Protection Agency (EPA) noise level work [3] and an Empire State Electric Energy Research Corp. Guide [4] which utilizes an "acoustical usage factor" to estimate the fraction of time each piece of construction equipment is operating at full power (i.e., its loudest condition) during a construction operation. Table 1 presents a construction equipment noise database compiled through the CA/T project [2]. This database is used to predict construction noise within the RCNM. The noise levels listed represent the A-weighted maximum sound level (Lmax), measured at a distance of 50 feet from the construction equipment.

Table 1. CA/T equipment noise emissions and acoustical usage factors database.

CA/T Noise Emission Reference Levels and Usage Factors					
filename: EQUIPLST.xls					
revised: 7/26/05					
Equipment Description	Impact Device ?	Acoustical Use Factor (%)	Spec 721.560 Lmax @ 50ft (dBA, slow)	Actual Measured Lmax @ 50ft (dBA, slow) (samples averaged)	No. of Actual Data Samples (Count)
All Other Equipment > 5 HP	No	50	85	-- N/A --	0
Auger Drill Rig	No	20	85	84	36
Backhoe	No	40	80	78	372
Bar Bender	No	20	80	-- N/A --	0
Blasting	Yes	-- N/A --	94	-- N/A --	0
Boring Jack Power Unit	No	50	80	83	1
Chain Saw	No	20	85	84	46
Clam Shovel (dropping)	Yes	20	93	87	4
Compactor (ground)	No	20	80	83	57
Compressor (air)	No	40	80	78	18
Concrete Batch Plant	No	15	83	-- N/A --	0
Concrete Mixer Truck	No	40	85	79	40
Concrete Pump Truck	No	20	82	81	30
Concrete Saw	No	20	90	90	55
Crane	No	16	85	81	405
Dozer	No	40	85	82	55
Drill Rig Truck	No	20	84	79	22
Drum Mixer	No	50	80	80	1
Dump Truck	No	40	84	76	31
Excavator	No	40	85	81	170
Flat Bed Truck	No	40	84	74	4
Front End Loader	No	40	80	79	96
Generator	No	50	82	81	19
Generator (<25KVA, VMS signs)	No	50	70	73	74
Gradall	No	40	85	83	70
Grader	No	40	85	-- N/A --	0
Grapple (on backhoe)	No	40	85	87	1
Horizontal Boring Hydr. Jack	No	25	80	82	6
Hydra Break Ram	Yes	10	90	-- N/A --	0
Impact Pile Driver	Yes	20	95	101	11
Jackhammer	Yes	20	85	89	133
Man Lift	No	20	85	75	23
Mounted Impact Hammer (hoe ram)	Yes	20	90	90	212
Pavement Scarafier	No	20	85	90	2
Paver	No	50	85	77	9
Pickup Truck	No	40	55	75	1
Pneumatic Tools	No	50	85	85	90
Pumps	No	50	77	81	17
Refrigerator Unit	No	100	82	73	3
Rivit Buster/chipping gun	Yes	20	85	79	19
Rock Drill	No	20	85	81	3
Roller	No	20	85	80	16
Sand Blasting (Single Nozzle)	No	20	85	96	9
Scraper	No	40	85	84	12
Shears (on backhoe)	No	40	85	96	5
Slurry Plant	No	100	78	78	1
Slurry Trenching Machine	No	50	82	80	75
Soil Mix Drill Rig	No	50	80	-- N/A --	0
Tractor	No	40	84	-- N/A --	0
Vacuum Excavator (Vac-truck)	No	40	85	85	149
Vacuum Street Sweeper	No	10	80	82	19
Ventilation Fan	No	100	85	79	13
Vibrating Hopper	No	50	85	87	1
Vibratory Concrete Mixer	No	20	80	80	1
Vibratory Pile Driver	No	20	95	101	44
Warning Horn	No	5	85	83	12
Welder / Torch	No	40	73	74	5

3 The RCNM

The RCNM is a computer program used to assess construction noise impacts. The computer on which it is installed should be equipped with the Microsoft Windows 98 or newer operating system (OS) and 192 MB or more of random access memory (RAM). The display should be set to 1024 x 768 pixels or greater, and the computer should carry the Adobe Acrobat 4.0 or newer software.

The RCNM allows the estimation of three key metrics of interest: Lmax, Leq, and L10 at receptor locations for a construction operation that can include up to 20 pieces of equipment. RCNM allows for user-defined construction equipment and user-defined noise limit criteria. The two main uses of the RCNM are to allow typical computer users to: 1. easily predict noise emissions from construction equipment, and 2. determine a construction work plan's compliance with noise criteria limits. A variety of construction work scenarios can be created quickly, allowing the user to determine the impact of changing construction equipment and adding/removing the effects of shielding due to noise mitigation devices such as barriers.

3.1 RCNM Main Page

The RCNM consists of one main display page with Input Data and Results sections, shown in Figure 1.

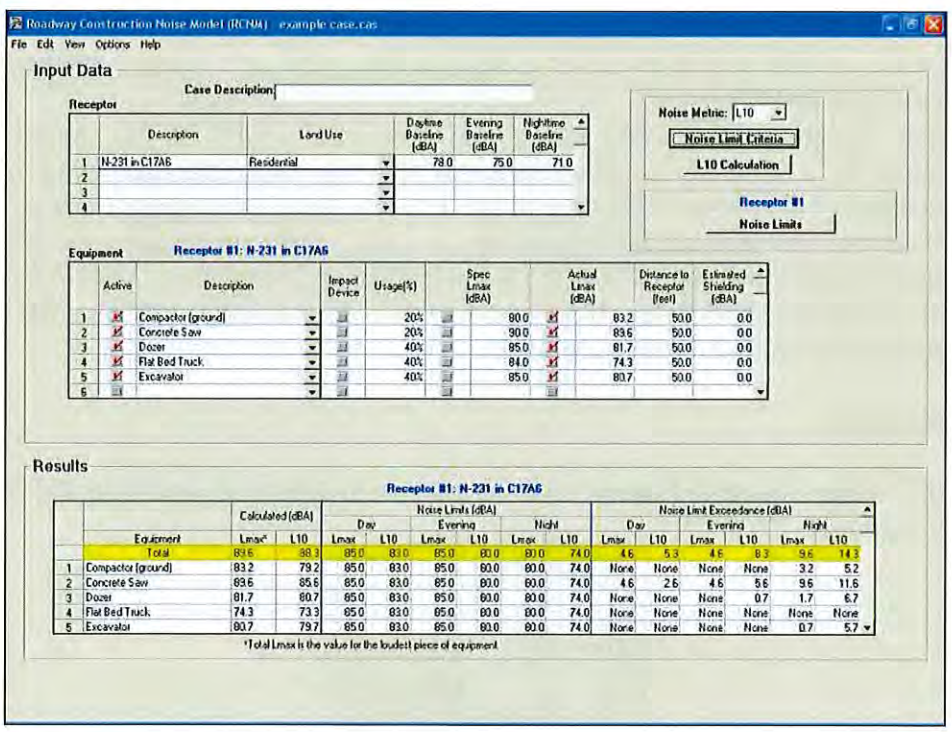

Figure 1. The RCNM main page

Several command buttons and pull-down menus allow the user to modify the input data before results are calculated by the model.

3.1.1 File Menu

The <File> menu, shown in Figure 2, contains items that allow the user to create, open, and save a case, export the results of a case, and exit the program.

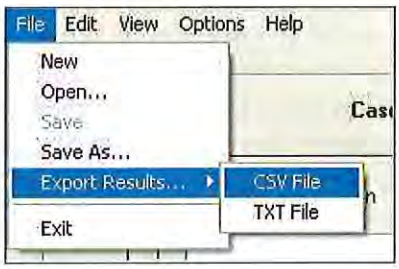

Figure 2. <File> Menu

- <New> creates a new case. If a case is currently open, the user is prompted to save it before closing.
- <Open…> allows the user to open an existing case file ([name].cas).
- <Save> saves the case with the current filename. If this is a new case, the user is asked for a new filename ([name].cas).
- <Save As…> The user is asked for a filename for a new case ([name].cas) and saves the case with that filename.
- <Export Results> prompts the user to save the case results for the current or all receptors to a comma separated value (CSV) file with the following naming convention: [name].csv. This type of file is easily read into a spreadsheet program. The user can also save the case results to a text file (TXT), which saves the results to a space-separated text format with the following naming convention: [name].txt.
- <Exit> closes the application. If changes have been made to the open case, the user is asked if he/she would like to save the case.

3.1.2 Edit Menu

The <Edit> menu, shown in Figure 3, allows the user to copy and paste data, delete data, and undo changes.

Figure 3. <Edit> Menu

- <Copy> lets the user copy into a clipboard the contents of a single cell or an entire line from an RCNM dialogue box.
- <Paste> lets the user copy the contents of the clipboard into a single cell or an entire line of an RCNM dialogue box.
- <Delete> lets the user delete from the case a receptor or piece of equipment selected in the receptor or equipment dialogue box.
- <Undo> lets the user revert the RCNM one step to where it was before the latest change was made.

3.1.3 View Menu

The <View> menu, shown in Figure 4, allows the user to focus in <Zoom +> on either the Input Data or Results section of the RCNM's main page. To activate Zoom +, click on Zoom + and guide the spyglass + icon to either Input Data or Results and single-click.

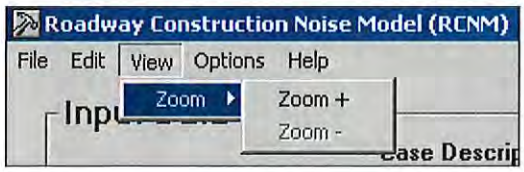

Figure 4. <View> Menu

To deactivate Zoom + and go back to the full RCNM screen, click on Zoom – and guide the spyglass – icon to the Input Data or Results section that has been maximized on the screen.

3.1.4 Options Menu

The <Options> menu, shown in Figure 5, allows the user to modify the equipment list and change the case's units of measure from feet to meters.

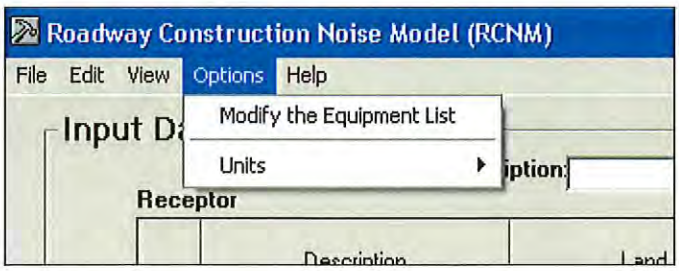

Figure 5. <Options> menu

The <Options> menu allows the user to add new types of equipment to the equipment list. The equipment list modification dialogue box, shown in Figure 6, allows the user to specify a user-defined piece of equipment and add it. The user can specify the following

data: whether the equipment is an impact device, the equipment's usage factor[1], and the equipment's Lmax level (spec and/or actual[2]). The user can also delete equipment that's been added by selecting it and clicking the delete button. The default equipment cannot be modified, but it may be deleted entirely from the case by selecting it and clicking the delete button. Selecting the default button restores the default equipment list (from the CA/T Project) and eliminates any user-defined equipment.

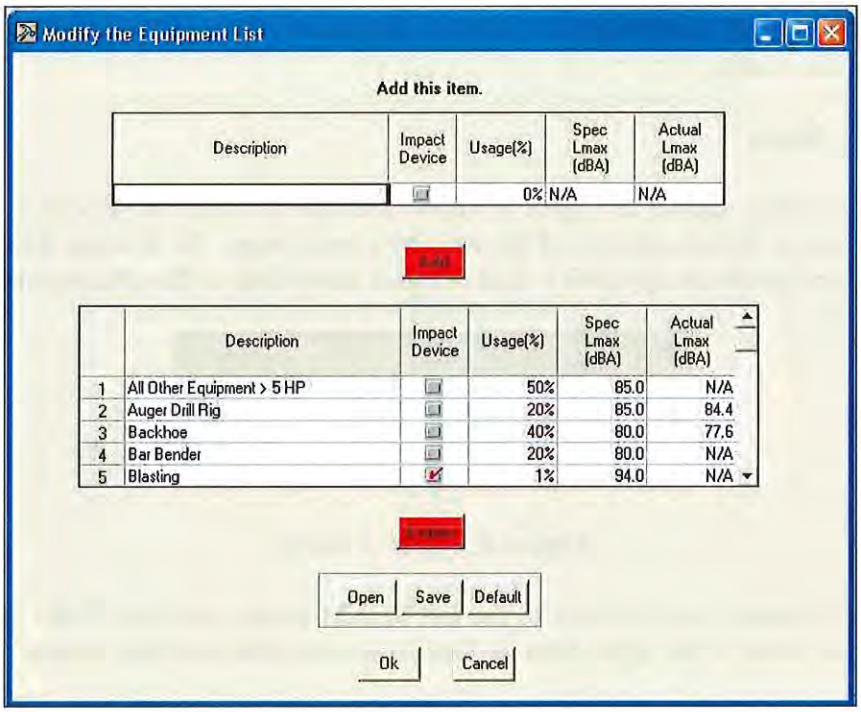

Figure 6. Equipment list modification dialogue box

Data for user-defined pieces of equipment may be saved to an equipment file ([name].equ), along with all other equipment in the current list, including default equipment. This file may be opened in other cases to incorporate these pieces of equipment.

The <Options> menu, as shown in Figure 7, also allows the user to change the case's units of measure from feet to meters or from meters to feet. The only input data affected by this tool are the Distance to Receptor values.

[1] Usage factor is the percentage of time during a construction noise operation that a piece of construction equipment is operating at full power. In the case of construction blasting, the equipment gives a very short duration blast, and can be quantified by using a 1% usage factor in the RCNM to allow for some prediction. Never use a usage factor of zero because the log of zero causes a mathematical impossibility. The usage factor term only affects the computation of Leq and L10. The usage factor does not enter into the equation when calculating the more important term for blasting, that being the Lmax.

[2] "Spec" refers to noise levels stated in noise specifications, and "Actual" refers to Lmax values measured at 50 ft from the equipment.

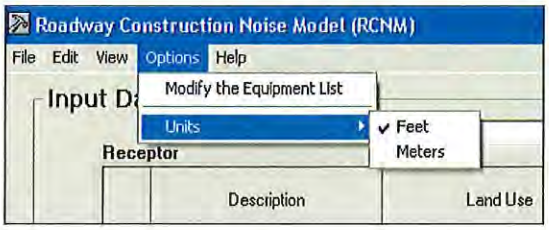

Figure 7. Units modification pull-down menu

3.1.5 Help Menu

The <Help> Menu loads for the user the RCNM User's Guide in Portable Document Format (PDF). This PDF is searchable by key word using the Adobe Acrobat Edit / Find search tool.

3.2 Input Data

The user is required to input receptor data and equipment data before a case can be processed. The user is advised to type in some summary comments about the case in the Case Description dialogue box before inputting data. Also, in order to determine noise limit exceedance values, the user can input noise limit criteria.

3.2.1 Receptors

Multiple receptors may be input for a case, but only one receptor may be processed at a time. The name of the highlighted receptor chosen for processing appears in blue type above the Equipment input dialogue box and the Noise Limits command button (see Figure 1). The user specifies the receptors for a study by entering information into the Receptors input box in the main window of the RCNM. The user is required to enter the receptor name, land use, daytime baseline L10 or Leq, evening baseline L10 or Leq, and nighttime baseline L10 or Leq. The baseline levels indicate the sound level at a receptor before any construction noise contributions. Baseline levels are only necessary if the desired noise criteria limits are based on *relative* increases in noise level. If the desired noise criteria limits are *absolute* noise levels, then the user should insert a placeholder number other than zero.

When entering information for more than one receptor, it may be desirable to copy information already entered. An entire receptor row may be highlighted and copied to another row, where copying multiple rows requires the selection of the same number of rows when pasting (this same functionality also applies to editable cells). Note: Entire rows may be selected by clicking on the row number.

Again, the RCNM will only calculate results for the receptor displayed in blue type in the Input Data portion of the main page. The results for other receptors may be displayed by selecting the desired receptor in the Receptor window; to select a receptor, click in any

cell in the row. Up to 100 receptors may be included in any case. Information for receptors is saved in the case file ([name].cas).

3.2.2 Equipment

Core equipment noise data are stored in the RCNM and are accessible by a pull-down menu in the main page, as in Figure 8.

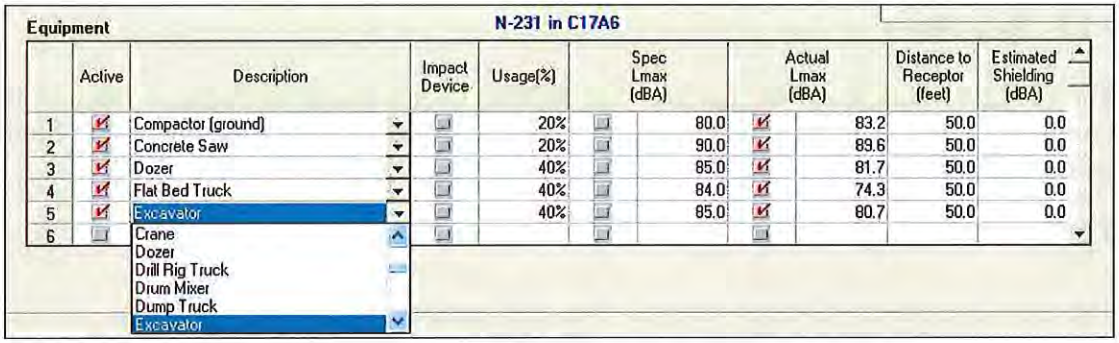

Figure 8. Equipment dialogue box, with pull-down menu shown

As discussed in Section 3.1.4, new pieces of equipment may be added to a case and saved in an equipment file ([name].equ). When the user-defined equipment file is opened through the <Options> / <Modify the Equipment List> menu, user-defined equipment will appear in the equipment pull-down menu. The user activates and inactivates chosen equipment types by ticking and unticking the "Active" checkbox. The user is required to specify:

1. The type of reference emission levels to use ("Spec", if applicable, or "Actual", [the default is "Actual"]);
2. Distance to Receptor – that is, the distance between each type of equipment and the receptor being analyzed (the default distance is 50 feet); and
3. Estimated Shielding (in dBA) associated with each type of equipment (can leave the default value of 0.0 when not considering shielding). **NOTE: A Best Practices document is presented in Appendix A showing how to determine Estimated Shielding using several Rules of Thumb developed from experience at the CA/T project.**

When entering information for more than one piece of equipment, it may be desirable to copy information already entered. An entire equipment row may be highlighted and copied to another row, where copying multiple rows requires the selection of the same number of rows when pasting (this same functionality also applies to editable cells). Note: Entire rows may be selected by clicking on the row number.

The user may analyze up to 20 pieces of equipment at one time, and they may be included in any combination of different or identical equipment types.

3.2.3 Noise Metric and Noise Limit Criteria

While a case is open, the user can choose a noise metric (for baseline levels, noise limits, and calculated results) and enter the noise limit criteria for a local area. The user may edit the Lmax and L10 or Leq day, evening, and night noise limit criteria for a residential, commercial, or industrial area. Daytime, evening, and nighttime may represent any time periods the user wishes, but they are typically defined as 7 AM to 6 PM, 6 PM to 10 PM, and 10 PM to 7 AM, respectively. The criteria, used together with the baseline sound levels, define the noise limits for each receptor. CA/T Noise Limit Criteria are used as a default [1], but users may input their own criteria. The RCNM offers a metric pull-down menu and two or three command buttons to the right of the Receptor input dialogue box.

- Metric Pull-Down Menu

A pull-down menu allows the user to choose between the L10 or Leq metric, as in Figure 9. The chosen metric represents that used for the baseline levels, noise limits, and calculated results. For the noise limits and calculated results, Lmax values are also included.

Figure 9. Noise Metric pull-down menu

- Noise Limit Criteria Pop-up Dialogue Box

A pop-up dialogue box allows the user to specify Noise Limit Criteria information for an area being studied in a case, as in Figure 10. The flexibility of the Noise Limit Criteria allows RCNM users to incorporate criteria based on local noise ordinances and baseline levels measured for each receptor.

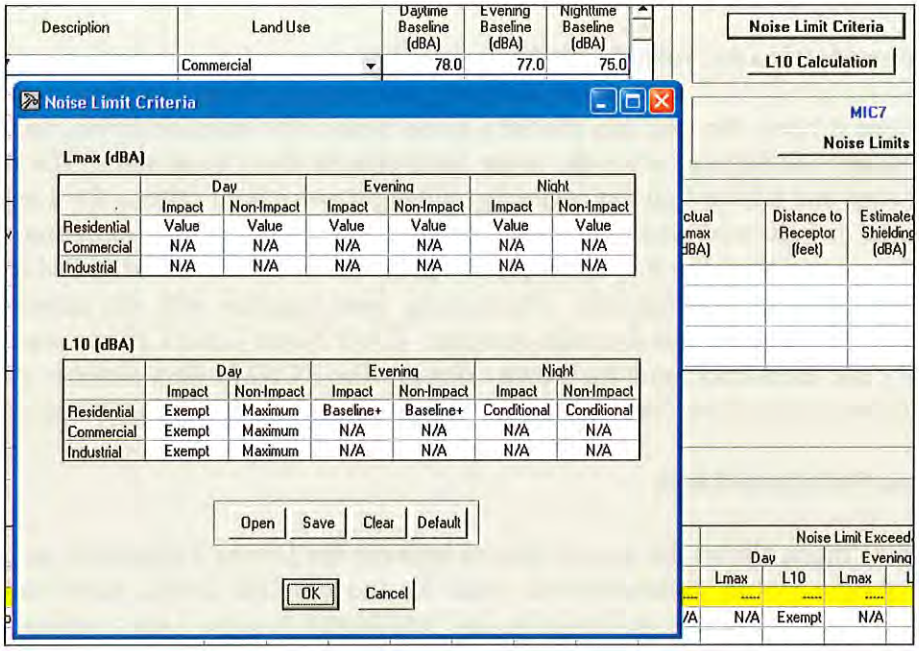

Figure 10. Noise Limit Criteria pop-up dialogue box

The user may populate this dialogue box with Noise Limit Criteria information derived from CA/T Construction Noise Control Spec. 721.560 [1] by clicking on the "Default" command button and clicking "Yes" when asked to load information from the default file, which is stored in the RCNM (see Table 2).

Table 2. Default Noise Limit Criteria

	Daytime (7 AM to 6 PM)		Evening (6 PM to 10 PM)		Nighttime (10 PM to 7 AM)	
Land Use	**L10 Limit (dBA)**	**Lmax Limit (dBA)**	**L10 Limit (dBA)**	**Lmax Limit (dBA)**	**L10 Limit (dBA)**	**Lmax Limit (dBA)**
Residential	maximum of 75 and baseline + 5 for non-impact* and exempt for impact**	85 for non-impact and 90 for impact	baseline + 5	85	if baseline <70 then baseline +5; if baseline ≥70 then baseline + 3	80
Commercial	maximum of 80 and baseline + 5 for non-impact and exempt for impact	N/A	N/A	N/A	N/A	N/A
Industrial	maximum of 85 and baseline+5 for non-impact and exempt for impact	N/A	N/A	N/A	N/A	N/A

* Non-impact equipment is equipment that generates a constant noise level while in operation.

** Impact Equipment is equipment that generates impulsive noise. Impulse Noise is defined as noise produced by the periodic impact of a mass on a surface, of short duration (generally less than one second), high intensity, abrupt onset and rapid decay, and often rapidly changing spectral composition.

Otherwise, the user may clear any information present in the dialogue box and specify new data in each cell. Clicking on the "Clear" command button will prompt the user to set all the cells in the dialogue box to Not Applicable (N/A), as in Figure 11. By clicking "Yes," the user will populate all cells with N/A; by clicking "No," the dialogue box will return to the data present before the user clicked "Clear."

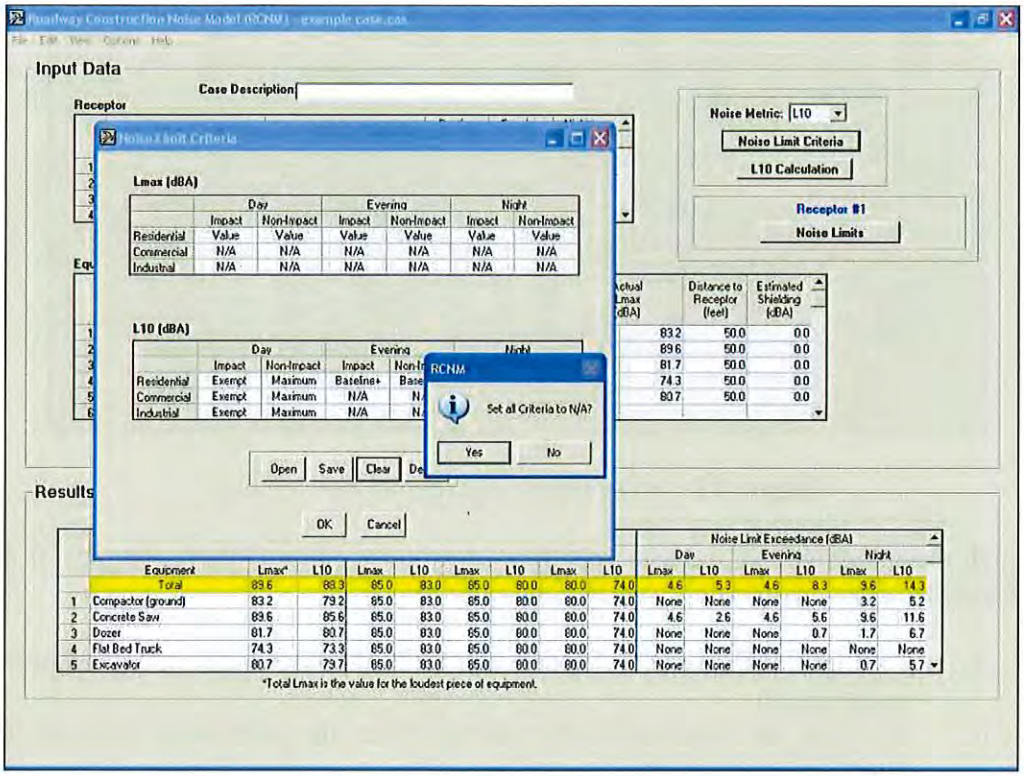

Figure 11. The Noise Limit Criteria "Clear" command button

Clicking on any cell in the Noise Limit Criteria dialogue box reveals a Noise Limit Criteria pull-down menu. Click on this pull-down menu to access the six options, as in Figure 12.

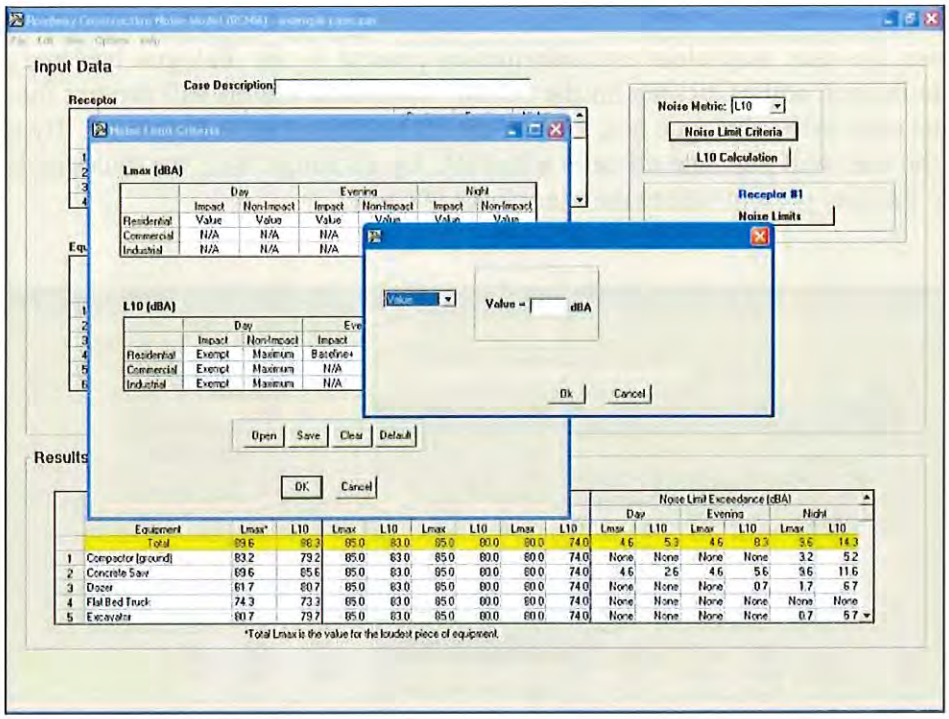

Figure 12. Noise Limit Criteria pull-down menu

Through these six options, the user specifies what Noise Limit Criteria changes, if any, are desirable in each cell. The six cell options are:

i. Exempt (for the specified metric and land use, the equipment is exempt from noise limits)
ii. N/A (for the specified metric and land use, the equipment does not have applicable noise limits)
iii. Value (user is prompted to enter a value for which the noise level should not exceed), as in Figure 13:

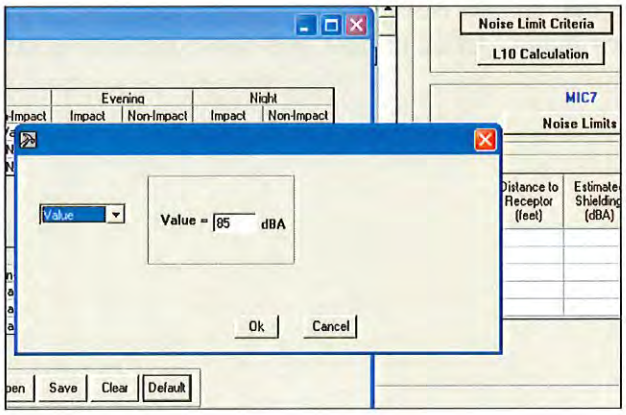

Figure 13. Noise Limit Criteria "Value" dialogue box

iv. Maximum (set value for which a noise level should not exceed to the maximum of two possible levels: A user-defined level or the Baseline level plus some user-defined increment), as in Figure 14:

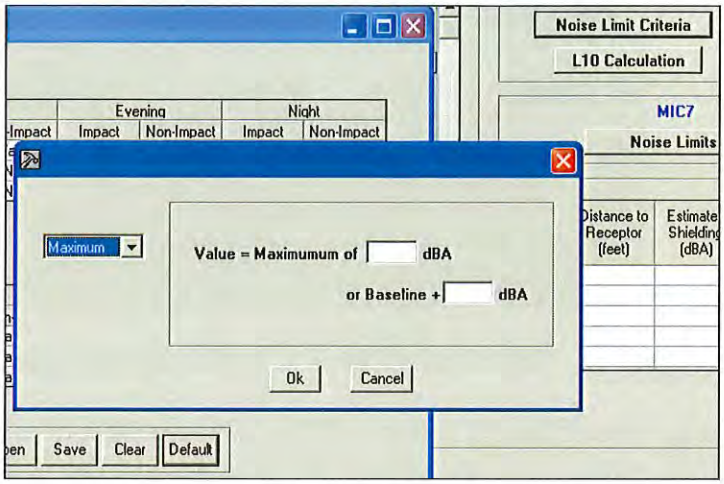

Figure 14. Noise Limit Criteria "Maximum" dialogue box

v. Baseline + (set value for which a noise level should not exceed to the Baseline level plus some user-defined increment), as in Figure 15:

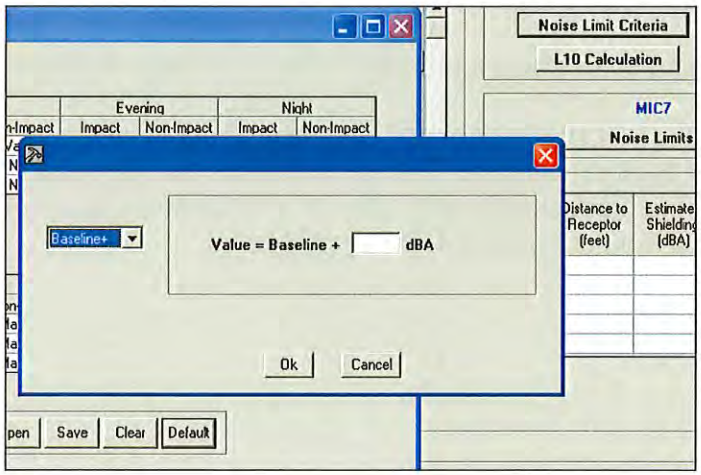

Figure 15. Noise Limit Criteria "Baseline +" dialogue box

vi. Conditional (set conditional value for which a noise level should not exceed; the user is prompted to enter the following information: 1. a comparison value, i.e., "If Baseline < [value], then …"; 2. an increment value to add to the baseline level if the baseline level is *less than* the comparison value; 3. an increment value to add to the baseline level if the baseline level is *greater than or equal to* the comparison value), as in Figure 16:

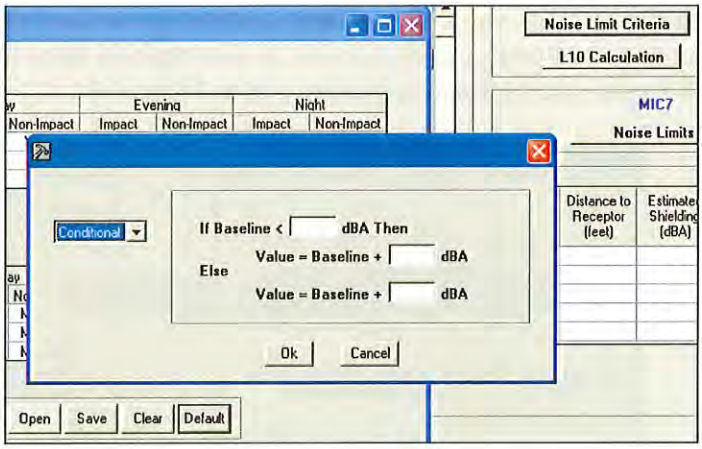

Figure 16. Noise Limit Criteria "Conditional" dialogue box

To see the current value of a cell, simply hold the mouse pointer over the cell. Once the user has specified values for all the cells in the Noise Limit Criteria dialogue box, these criteria can be saved in a criteria file ([name].cri) by clicking on the "Save" command button. The user will be prompted to give the criteria file a name. These criteria can thereafter be loaded into any case by clicking on the "Open" command button.

The user returns to the Noise Limit Criteria dialogue box by clicking "Ok", and returns to the case by clicking "Ok" again.

- L10 Calculation (this button is present if the L10 metric is chosen)

By clicking on the "L10 Calculation" command button, the user can specify the adjustment factor used to calculate L10, as in Figure 17. By clicking the "Default" command button, the user automatically calls for an adjustment factor of 3 dBA, a value empirically derived from extensive CA/T Project data [2].

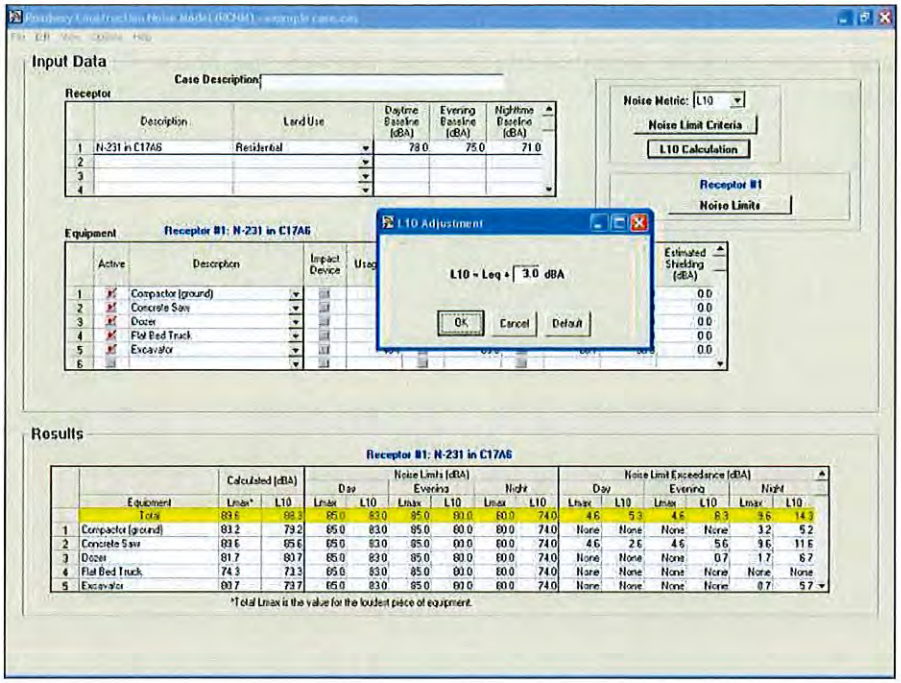

Figure 17. L10 Adjustment dialogue box

- Noise Limits

The "Noise Limits" command button opens a display window that looks exactly like the "Noise Limit Criteria" dialogue box, except that it is not editable, and the only button in the opened window is "Ok". The values in the cells are based on the criteria set in the Noise Limit Criteria window and the baseline levels for the selected receiver, as in Figure 18. (If a receiver is not selected, the dialogue box is unavailable for viewing.)

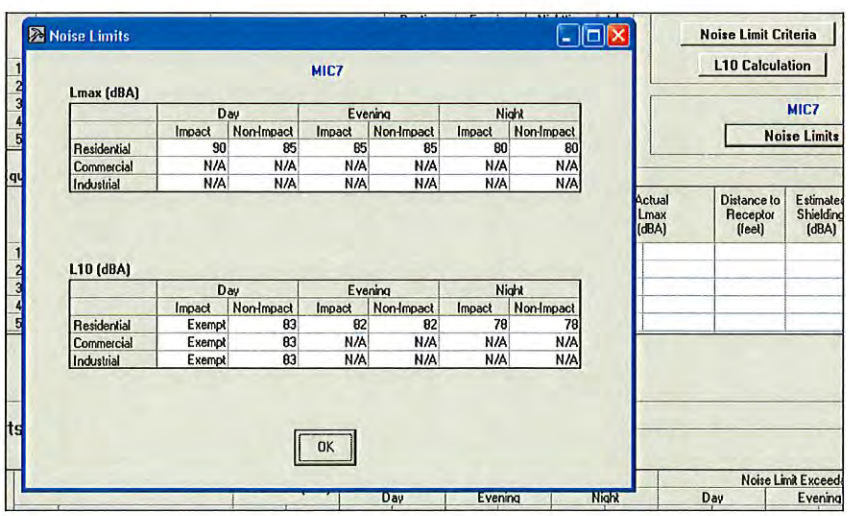

Figure 18. Noise Limits display window

Again, these limits may be changed by the user through the Noise Limit Criteria data entry window.

4 Results

Once the data for one receptor and up to 20 pieces of equipment have been specified in the Input Data portion of the main screen, the RCNM will automatically calculate the Results readout displayed in the bottom portion of the main screen, as in Figure 19. Any changes to the Input Data will automatically cause the RCNM to update the Results. The results for only one receptor will be displayed at a time; results for other receptors can be displayed by selecting the desired receptor in the Receptor window (click in any cell in the desired receptor row). Results for up to 100 receptors can be saved in a case. If Noise Limit Criteria information has been specified, the corresponding results (limits and exceedance values) will be updated as well.

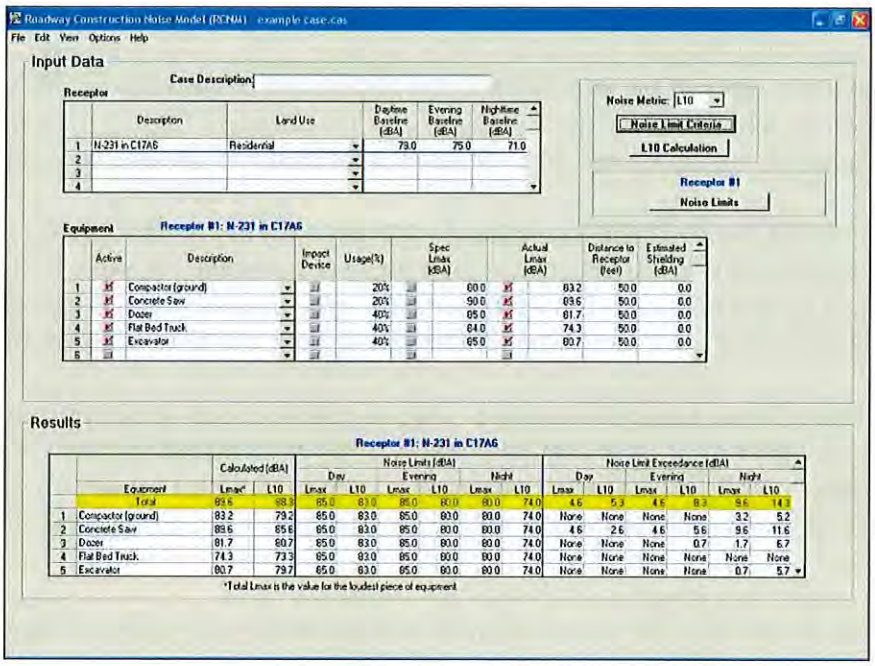

Figure 19. The RCNM main-page Results display

If there is insufficient input data for RCNM to compute a result, then a "Check Input Data" button will appear in the middle of the screen. Clicking on this button will provide the user with an indication of what additional input data are required.

The Results are presented in a read-only spreadsheet that contains the following fields, all applicable to the selected receptor:

- Equipment – the name/description of the equipment type
- Calculated Lmax – the calculated Lmax value for the equipment type. This is calculated from the "Spec" or "Actual" equipment Lmax, distance, and estimated shielding.

- Calculated Leq or L10 – the calculated Leq or L10 value (depending on what is selected in the Noise Metric pull-down menu) for the equipment type. This is calculated from the Calculated Lmax values, equipment usage factors, and selected adjustment factor.
- Day Lmax Noise Limit – the daytime Lmax noise limit for the equipment type.
- Day Leq or L10 Noise Limit – the daytime Leq or L10 noise limit for the equipment type.
- Evening Lmax Noise Limit – the evening Lmax noise limit for the equipment type.
- Evening Leq or L10 Noise Limit – the evening Leq or L10 noise limit for the equipment type.
- Night Lmax Noise Limit – the nighttime Lmax noise limit for the equipment type.
- Night Leq or L10 Noise Limit – the nighttime Leq or L10 noise limit for the equipment type.
- Day Lmax Noise Limit Exceedance – the daytime Lmax noise limit exceedance for the equipment type. If the criteria limit was not exceeded, the value is "None".
- Day Leq or L10 Noise Limit Exceedance – the daytime Leq or L10 noise limit exceedance for the equipment type. If the criteria limit was not exceeded, the value is "None".
- Evening Lmax Noise Limit Exceedance – the evening Lmax noise limit exceedance for the equipment type. If the criteria limit was not exceeded, the value is "None".
- Evening Leq or L10 Noise Limit Exceedance – the evening Leq or L10 noise limit exceedance for the equipment type. If the criteria limit was not exceeded, the value is "None".
- Night Lmax Noise Limit Exceedance – the nighttime Lmax noise limit exceedance for the equipment type. If the criteria limit was not exceeded, the value is "None".
- Night Leq or L10 Noise Limit Exceedance – the nighttime Leq or L10 noise limit exceedance for the equipment type. If the criteria limit was not exceeded, the value is "None".

The user may scroll down to view equipment results that are not visible, or the <View> / <Zoom +> menu may be used to zoom in on the Results display only (see Section 3.1.3). There is a row at the top of the Results display, highlighted in yellow, that calculates the total for all equipment combined. This row is always visible during scrolling of the Results spreadsheet. (Calculations for totals are explained in Section 5.3.)

Again, users may export a case's input information and results to a comma separated value (CSV) report file ([name].csv) by choosing the <Export Results> option from the <File> menu. The user can also save the case results to a text file (TXT), which saves the results to a space-separated text format ([name].txt). Results may be saved for a single receptor or all receptors in the case.

5 Calculations in the RCNM

The RCNM uses the primary equation described in the CA/T Construction Noise Control Specification 721.560 [1] for the construction noise calculations.

5.1 Metric Calculation

LmaxCalc = selected_Lmax – 20log(D/50) - shielding (1)

where

selected_Lmax is the "Spec" or "Actual" maximum A-weighted sound level at 50 ft., listed in Table 1 for all pieces of equipment, in dBA,
D is the distance between the equipment and the receptor, in feet,
shielding is the insertion loss of any barriers or mitigation, in dBA (see Appendix A).

Leq = LmaxCalc + 10log(U.F.%/100) (2)

where

U.F.% is the time-averaging equipment usage factor, in percent (see footnote 1 on p 7).

L10 = Leq + 3 dBA adjustment factor (3)

The RCNM calculates L10 by adding 3 dBA to the Leq, where the 3 dBA default L10 adjustment factor was empirically derived by comparing extensive CA/T construction noise data. This adjustment factor may be changed in the RCNM at the user's discretion.

5.2 Exceedance Calculation

Daytime Lmax Exceedance = LmaxCalc – Daytime Lmax Limit (4)

Daytime Leq or L10 Exceedance = Leq or L10 – Daytime Leq or L10 Limit (5)

Evening Lmax Exceedance = LmaxCalc – Evening Lmax Limit (6)

Evening Leq or L10 Exceedance = Leq or L10 – Evening Leq or L10 Limit (7)

Nighttime Lmax Exceedance = LmaxCalc – Nighttime Lmax Limit (8)

Nighttime Leq or L10 Exceedance = Leq or L10 – Nighttime Leq or L10 Limit (9)

5.3 Totals Calculation

The Total values in the Results section are determined in the following manner:

1) Total Leq = 10*log(Σ (individual equipment Leq values[3]))
2) Total L10 = 10*log(Σ (individual equipment L10 values[3]))
3) Total Lmax = Maximum among individual equipment Lmax values
4) Total noise limits and limit exceedances:
    a. Determine whether or not total is impact or non-impact
        i. If all the equipment is non-impact, label the total as non-impact.
        ii. If all the equipment is impact, label the total as impact.
        iii. If the equipment is mixed non-impact and impact, label the total as non-impact.

    b. Determine total noise limits and limit exceedances the same way as with individual pieces of equipment (see Section 5.2), only use the calculated total sound levels (Total Leq or Total L10) and the impact or non-impact label according to the criteria specified in i through iii.

[3] The Leq and L10 levels are energy averages.

6 References

[1] Construction Noise Control Specification 721.560, Central Artery/Tunnel Project, Massachusetts Turnpike Authority, Boston, MA, 2002.

[2] Thalheimer, Erich. "Construction Noise Control Program and Mitigation Strategy at the Central Artery/Tunnel Project". Noise Control Engineering Journal, Vol. 48, No. 5, pp 157-165, September - October 2000.

[3] "Information on Levels of Environmental Noise Requisite to Protect Public Health and Welfare with an Adequate Margin of Safety", Environmental Protection Agency, ONAC 550/9-74-004. Washington, DC, March 1974.

[4] "Power Plant Construction Noise Guide". Bolt, Beranek, and Newman Inc. and Empire State Electric Energy Research Corp., Report No. 3321. New York, NY May 1977.

Appendix A: Best Practices for Calculating Estimated Shielding for Use in the RCNM

This Appendix presents some simplified shielding factors for use in the RCNM. These suggestions are "rules of thumb" based on experience gathered by CA/T construction noise experts working in the field [2].

1) If a noise barrier or other obstruction (like a dirt mound) just barely breaks the line-of-sight between the noise source and the receptor, use 3 dBA.

2) If the noise source is completely enclosed OR completely shielded with a solid barrier located close to the source, use 8 dBA. If the enclosure and/or barrier has some gaps in it, reduce the effectiveness to 5 dBA.

3) If the noise source is completely enclosed AND completely shielded with a solid barrier located close to the source, use 10 dBA.

4) If a building stands between the noise source and receptor and completely shields the noise source, use 15 dBA.

5) If a noise source is enclosed or shielded with heavy vinyl noise curtain material (e.g., SoundSeal BBC-13-2" or equivalent), use 5 dBA.

6) If dilapidated windows are replaced with new acoustical windows, or quality internal or exterior storm sashes, use an incremental improvement of 10 dBA for an overall Outside-to-Inside Noise Reduction (OINR) of 35 dBA.

7) If work is occurring deep inside a tunnel using the "top-down" construction method (i.e. cover the tunnel work with concrete roadway decks to allow surface traffic and then excavate underneath the roof deck), use 12 dBA.

Exerpts from:

Pre-Construction Survey Report, South Trunk Sewer Section G Force Main Replacement Project, Norfolk, Virginia,

SEISMIC SURVEYS INC.

SEISMIC SURVEYS INC.
P O Box 1185 • Frederick, MD 21702 • T 301.663.6630 • F 301.663.6647

January 29, 2016

Mr. Daniel Rickmond
Tidewater Utility Construction, Inc.
200 Lummis Road
Suffolk, Virginia 23434

Subject: **Pre-Construction Survey Report, South Trunk Sewer Section G Force Main Replacement Project, Norfolk, Virginia (SSI Job No. 15-1168)**

Dear Mr. Rickmond:

Seismic Surveys, Inc. (SSI) is pleased to present this Pre-Construction Survey Report for the designated structures adjacent to your South Trunk Sewer Section G Force Main Replacement project. These surveys were conducted December 14, 2015 through January 15, 2016, in accordance with our contract November 9, 2015. The structures surveyed are summarized in the table below.

SSI ID #	Address	Contact	Phone	Dates Notified	Survey Dates	Survey Extent
1	Virginia Maritime Assn. 236 E. Plume St. Norfolk, VA	Sam Davis	757.622.2639	12-07-15 12-11-15 12-29-15	12-15-15 01-13-16	Interior and Exterior
2A	Slover Library 235 E. Plume St. Norfolk, VA	Jessica Montfort	757.431.7450	12-07-15 12-11-15 12-29-15	12-14-15 01-08-16	Interior and Exterior
2B	Norfolk Convention & Visitors Center 232 E. Main St. Norfolk, VA	City of Norfolk Parking Department	757.664.6620	12-07-15 12-11-15 12-29-15 01-11-16	01-13-16 01-14-16	Interior and Exterior
3	Norfolk Waterside Marriott 235 E. Main St. Norfolk, VA	Jeff Tinsley	757.510.2609	12-07-15 12-11-15 12-29-15 01-11-16	01-13-16	Interior and Exterior
4	2 Commercial Pl. #100 Norfolk, VA	Mary Robbins	757.348.5973	12-07-15 12-11-15 12-14-15 12-29-15 01-05-16	01-14-16	Interior and Exterior
5	PNC Bank 555 E. Main St. Norfolk, VA	Harbor Management Group Krista Marshall	757.627.9440	12-07-15 12-11-15 12-29-15 01-05-16	01-13-16	Interior and Exterior

SSI ID #	Address	Contact	Phone	Dates Notified	Survey Dates	Survey Extent
6A	Crown Center 580 E. Main St. Norfolk, VA	Harbor Management Group Krista Marshall	757.627.9440	12-07-15 12-11-15 12-29-15 01-05-16	01-12-16	Interior and Exterior
6B	125 St. Paul Building 125 St. Paul's Blvd. Norfolk, VA	CBRE Commercial Real Estate Judy Knouf	757.490.3300	12-07-15 12-11-15 12-29-15	12-15-15 01-05-16	Interior and Exterior
7	MacArthur Center Parking Garage 300 Cumberland St. Norfolk, VA	Security Manager	757.627.6000	12-07-15 12-29-15 01-12-16	01-12-16 01-13-16	Interior and Exterior
8	The Rotunda 415 St. Paul's Blvd. – 525 E. Freemason St. Norfolk, VA	The Select Group Bonnie Herring	757.486.6000	12-07-16 12-14-16 12-29-16 01-05-16 01-11-16 01-14-16	01-14-16 01-15-16	Exterior
9	St. Paul's Place Condominiums 423 St. Paul's Blvd. Norfolk, VA	The Select Group Bob Garrett	757-486-6000	12-07-15 12-14-15 12-29-15 01-05-16	01-12-16	Partial Interior* and Exterior
10	St. Paul's Place Condominiums 433 St. Paul's Blvd. Norfolk, VA	The Select Group Bob Garrett	757-486-6000	12-07-15 12-14-15 12-29-15 01-05-16	01-12-16	Partial Interior** and Exterior
11	Norfolk Fire & Rescue 450 St. Paul's Blvd. Norfolk, VA	Chief Mark McCoy	757.664.6600	12-07-15 12-29-15 01-04-16	01-06-16	Interior and Exterior
12A	724-746 St. Paul's Blvd. Norfolk, VA	Norfolk Redevelopment and Housing Authority Paul Cramer	757.315.2002	12-07-15 12-14-15 12-16-15 12-29-15 01-08-16	01-11-16	Exterior
12B	748-770 St. Paul's Blvd. Norfolk, VA	Norfolk Redevelopment and Housing Authority Paul Cramer	757.315.2002	12-07-15 12-14-15 12-16-15 12-29-15 01-08-16	01-12-16	Exterior
13	347, 776-796 St. Paul's Blvd. Norfolk, VA	Norfolk Redevelopment and Housing Authority Paul Cramer	757.315.2002	12-07-15 12-14-15 12-16-15 12-29-15 01-08-16	01-12-16	Exterior
14	St. Paul's Episcopal Church 201 St. Paul's Blvd. Norfolk, VA	Bobby Bird	757.434.4961	12-07-15 12-14-15 12-15-15 12-29-15	01-07-16	Interior and Exterior
15	Nordstrom 301 Cumberland St. Norfolk, VA	Jessica Kridel	757.314.1111	12-07-15 12-15-15 12-29-15	01-12-15	Interior and Exterior
16	Streetscape – Intersection of E. Plume St. and Atlantic St.	N/A	N/A	N/A	12-14-15	Exterior

*Interior survey of closest East wall (Elevation A) of Units 3E & 4A
**Interior survey of closest East wall (Elevation A) of Units 2B & 2E

Observed conditions of the structures were documented in written form along with sketches and digital imagery. The survey documentation and media are arranged by SSI ID No. in the Appendix.

Established conventions were used while conducting these surveys. The first wall to the left, when entering the room, is assigned as wall no. 1. The wall numbering sequence is consecutive in a clockwise direction for building interiors and counterclockwise for building exteriors. Cracks that are less than about 1/16 inch wide are considered hairline unless otherwise noted.

While the pre-construction surveys were conducted in as complete and thorough a manner possible, due to time constraints and other circumstances, some pre-existing conditions will go unnoticed and unnoted. In addition, structures are dynamic in nature and, as such, are subject to a variety of internal and external forces. The forces acting upon a structure do not terminate upon the inception of construction operations in the area. Therefore, these surveys should only be used as a damage reference in conjunction with appropriate geophysical and/or seismic data. Original field documentation and digital imagery are on file in our Frederick, Maryland office.

We appreciate the opportunity to be of service on this project. If you have any questions or require further assistance in this matter, please contact us.

Sincerely,

SEISMIC SURVEYS, INCORPORATED

Matthew W. Anderson, P.E.
Principal Engineer

Attachment:

- Signed Right to Access Property Forms

Appendix:

- Field Report of Existing Structural Conditions (arranged by SSI ID No.)

Enclosure:

- 4 Flash Drives with Report Letter, Field Documentation and Digital Media

MWA/dmt
S:\SSI\SEISMIC SURVEYS\CLIENTS\Tidewater Utility Construction\15-1168 HRSD South Trunk Sewer Section G\Surveys\Report Letter 2015.01.29 DT 15-1168.docx

HRSD
Cleaning wastewater every day for a better Bay.

Right to Access Property
Downtown Norfolk Sanitary Sewer Pipeline Replacement

I hereby acknowledge that I understand the purpose of the pre-existing condition assessment (pre-construction survey) and I am authorized and responsible for the following decision:

- [x] Allow access to the exterior and interior of the property.
- [ ] Allow access to the exterior of the property only.
- [ ] Allow access to the interior of the property only.
- [ ] Deny access to the property.

Video and Photographic Documentation

- [x] Allow the engineer to take photos and videos of the exterior and interior of the property.
- [ ] Allow the engineer to take photos and videos of the exterior of the property only.
- [ ] Allow the engineer to take photos and videos of the interior of the property only.
- [ ] Deny the engineer to take photos and videos of the property.

Authorized Signature

1.8.16
Date

236 E. PLUME ST.
Property Address

PO Box 5911, Virginia Beach, VA 23471-0911 • 757.460.2261 • Fax 757.363.7917

Commissioners: Vishnu K. Lakdawala, PhD, Chair • Frederick N. Elofson, CPA, Vice-Chair • Michael E. Glenn
Arthur C. Bredemeyer • Maurice P. Lynch, PhD • Stephen C. Rodriguez • Susan M. Rotkis • Willie Levenston, Jr.
www.hrsd.com

APPENDIX

Field Report of Existing Structural Conditions
(arranged by SSI ID No.)

Field Report of Existing Structural Conditions

Surveyor(s): Jeff Girts, Ben Spindler **SSI Job No.** **15-1168**

Client: Tidewater Utility Construction Inc. Project Name: South Trunk Sewer Section G

Date(s): 12-15-15, 01-13-16 Time(s): 0900, 1530

Survey Type: Pre-Construction

Survey Area Exterior: Yes Interior: Yes - see notes

Type of Property: Commercial - Office Building

GENERAL INFORMATION

Address: 236 E. Plume Street - Virginia Maritime Association **SSI ID No.** **1**

Contact: Sam Davis Contact Type: Owner's Authorized Rep

Phone # of Contact: 757.622.2639 Name of Escort: Sam Davis

Distance to Work Area: ~15 ft.

Age of Structure: 1940s Date of Purchase: 1972

Digital Folder: 1

Digital Video: JAG-1

GENERAL DESCRIPTION

Number of Levels: 3 Lower Level: Yes

Structure Length (Approx.): 60 ft. Width (Approx.): 60 ft.

Foundation Type: Spread Footing

Foundation Materials: Concrete Block and Poured Concrete

Framing Type: Steel

Exterior Covering: See notes Porch/Deck Elevation(s): None

Chimney Material(s): None Walkway/Sidewalk Elevation(s): A & B

Patio Elevation(s): None Other Structures: None

Broken Windows: None visible

Field Report of Existing Structural Conditions

Address (Cont.): 236 E. Plume Street - Virginia Maritime Association **SSI ID No.** 1

FOR BLASTING SURVEYS ONLY

Sump Pump: Yes

Radon Remediation Installed: No

Buried Basement: Yes

CO Detectors Installed: Yes

ROOF AND DRAINAGE

Roof Materials: Flat - Membrane

Repairs or Leaks: Repaired leak a few years ago

Gutters: No

Down Spout: No

Down Spout Drains To: Sewer

Drainage away from foundation: Yes

Erosion Near Foundation Wall: No

Well: No

Location: NA

Septic: City septic

Location: NA

SETTLEMENT

Settlement Evident: No

If Yes, Comment: None

COMMENTS / CONCERNS

Survey extent:

Completed an interior survey of the east and south facing walls of the building (closest sides within 50 ft. of sewer line). This included 3 floors of offices and the 3 lower levels with the control room and HRSD Pump Station underground.

Notes:

Sam Davis has been with Virginia Maritime Association for about 5 years did the best he could with the information on the building. He claims that complete renovations for floors 1-3 were done about 2 years ago. The exterior walls are brick, but have since been covered with thick layer of concrete cover.

Exterior survey was completed on 01-13-16, by Ben Spindler.

Surveyor's Signature:	Benjamin Spindler

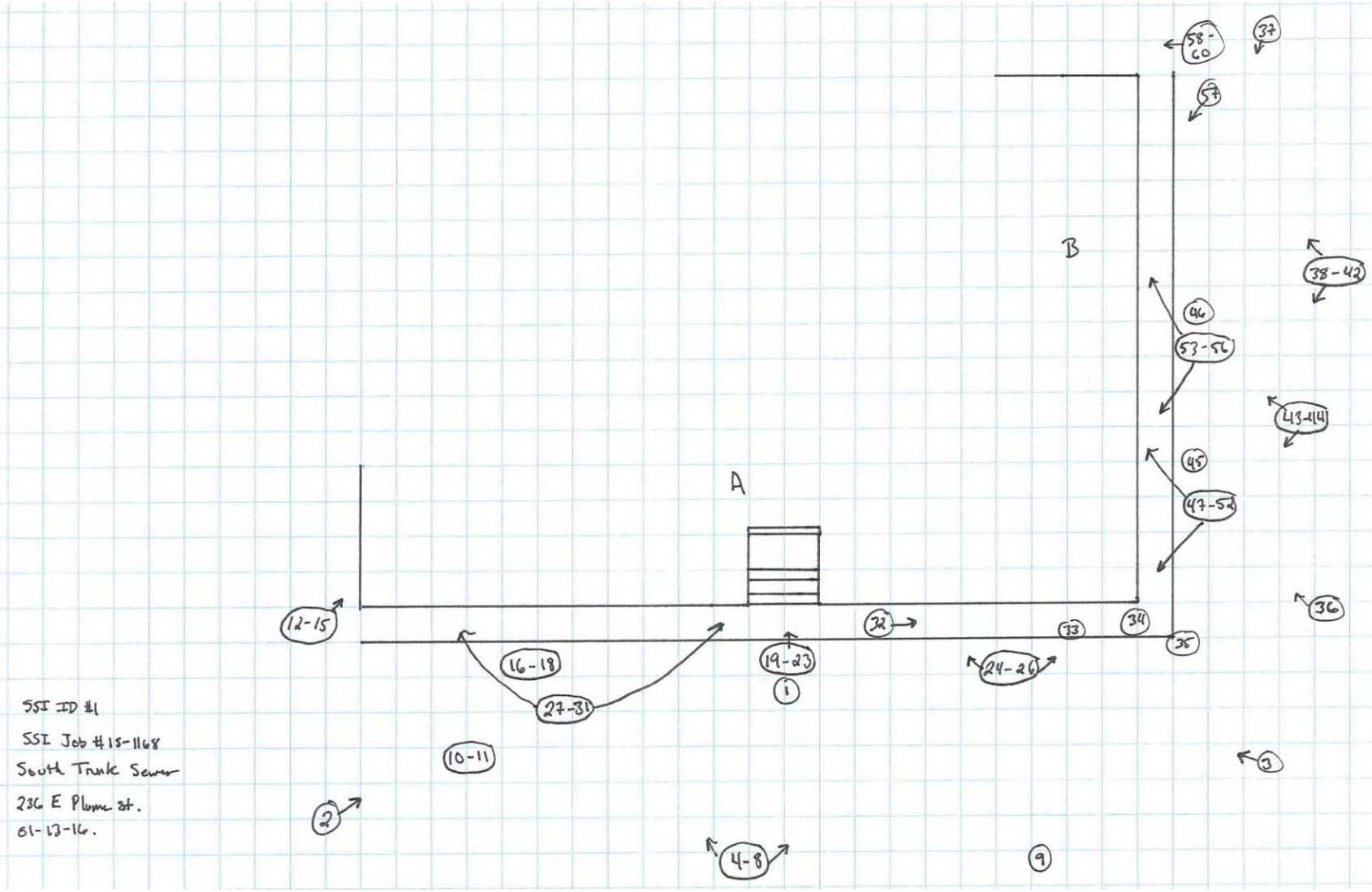

Legend

1 Digital Image Location and Number

Project: South Trunk Sewer Section G
Area: Exterior

Address: 236 E. Plume Street
Date: 01-13-16

SSI Job No.: 15-1168

Plan View Sketch with Image Locations

SEISMIC SURVEYS, INC.

SEISMIC SURVEYS

SSI Job No. 15-1168

Image Summary Log – Existing Structural Conditions

Address: 236 E. Plume Street - Virginia Maritime Association **SSI ID No.** 1

Area(s) of Survey: Exterior

Digital Folder Name: 1 Date(s) Taken: 01-13-16

Image #	Description
1	ID
2-3	Overview Elevation A
4-8	Overview windows 1-12 level 3
9	Caulk separations
10-11	Overview windows 1-5 level 2
13-15	Mortar joint separation
16-17	Overview windows 1-5 level 1
18	Caulk separation
19	Overview entrance hall
20-21	Caulk separation
22	Overview door 1 level 1
23	Overview steps
24-26	Overview windows 6-8 level 1
27-35	Overview brick / concrete sidewalk with typical conditions
36-37	Overview Elevation B
38-42	Overview windows 1-14 level 3
43-44	Overview windows 1-6 level 2
45-46	Overview windows 1-6 level 1
47-60	Overview brick / concrete sidewalk with typical conditions

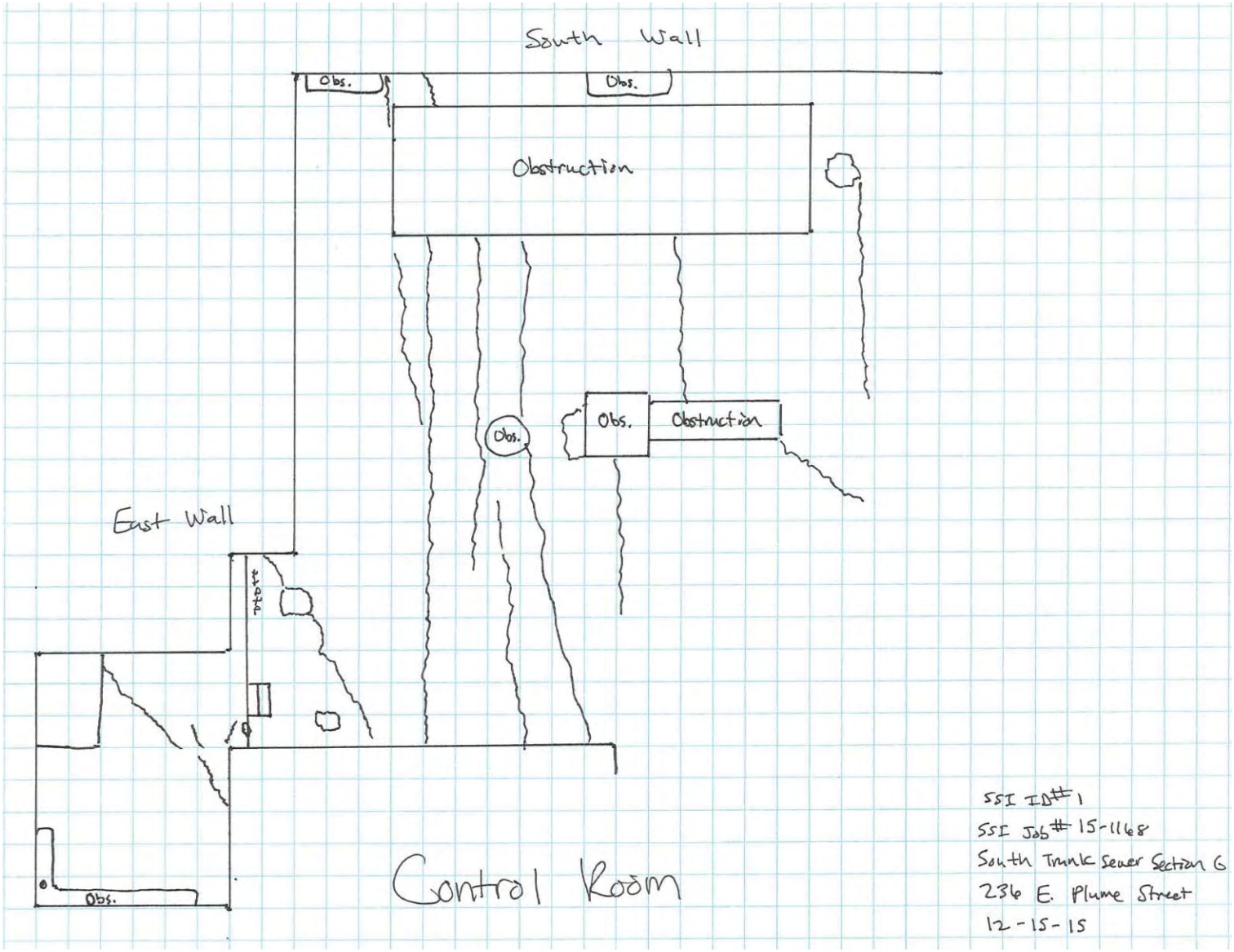

Legend

1 Digital Image Location and Number

Project: South Trunk Sewer Section G
Area: Interior – Control Room

Address: 236 E. Plume Street
Date: 12-15-15

SSI Job No.: 15-1168

Plan View Sketch with Image Locations

SEISMIC SURVEYS, INC.

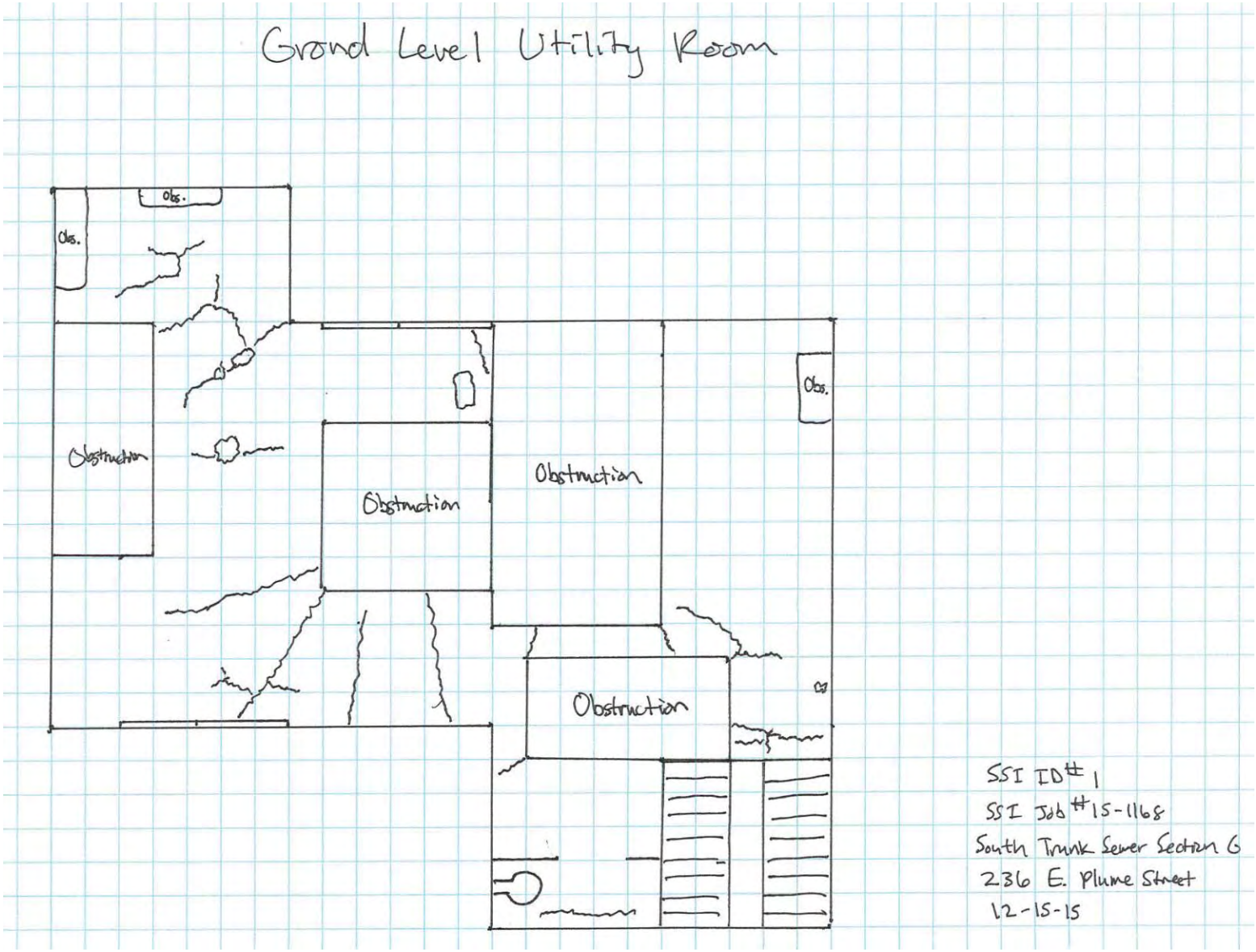

Legend

1 Digital Image Location and Number

Project: South Trunk Sewer Section G

Area: Interior – Ground Level Utility Room

Address: 236 E. Plume Street

Date: 12-15-15

SEISMIC SURVEYS

SSI Job No. 15-1168

Video Summary Log – Existing Structural Conditions

Address: 236 E. Plume Street - Virginia Maritime Association **SSI ID No.** 1

Area(s) of Survey: Interior

Video Folder Name: JAG-1 Date(s) Taken: 01-13-16

Time	Description
0920	Introduction
0921	Main entrance/vestibule level 1
0924	Lobby
0936	Hallway to offices level 1
0943	Office 1
0948	Office 2
0953	Conference room
1004	Stairwell
1027	Hallway level 2
1032	Conference room level 2
1039	Office 1
1044	Storage room
1046	Equipment room
1048	Office 2
1052	Office 3
1056	Server room
1100	Men's bathroom
1107	Level 3 hallway
1113	Confrere room
1122	Office 1
1125	Office 2
1129	Office 3
1147	Ground level pump station
1226	Stairwell to pump room
1231	Control room
1304	Pump room stairwell
1310	Pump room

Section 13 - Coordination with Virginia Department of Environmental Quality (DEQ) for Certificate to Construct and Certificate to Operate

A. Introduction - As a result of significant staffing reduction within DEQ in 2008, requirements by DEQ were implemented in an attempt to streamline their approval process for applications of Certificates to Construct (CTC) and Certificates to Operate (CTO). DEQ also identified a variance procedure for those projects that are non-capacity related or maintenance related work. Projects that have been identified by DEQ as requiring a CTC and CTO include new sewage treatment works, new sewage pump stations and force mains in excess of 2,000 gallons per day (gpd), new sanitary gravity sewers in excess of 40,000 gpd, any project that increases or decreases capacity and major modifications to sewage treatment works. In addition, water reuse related projects that require CTC and CTO under the Water Reclamation and Reuse Regulations (9 VAC 25-740.120.B.1.) include new industrial or municipal reclamation systems, new municipal satellite reclamation systems and reuse water storage. This Section describes when to use each of the four listed approaches to obtain either a CTC.

1. FIRMs shall have HRSD (HRSD's Chief of Technical Services and/or HRSD Permits Manager) review and approval prior to submitting CTC and CTO to VDEQ.

B. Approval CTC Process for State Water Quality Improvement Fund (WQIF) Projects - This involves DEQ's full engineering review process. Approval steps and specifics follow:

1. Submission of Preliminary Engineering Report (PER) or Final Engineering Report (FER).

   a. Specifics for PER as listed below.
      i. Suggested outline in 9 VAC 25-940.
      ii. Must address any additional items required by WQIF.
      iii. One hard copy initially to Office of Wastewater Engineering (OWE), WQIF, Virginia Revolving Loan Fund (VRLF) if needed plus one Portable Document Format (PDF) copy of final to OWE.
      iv. Review time 30-60 days per submittal

   b. Specifics for FER as listed below:
      i. Details in GM 07-2011
      ii. All calculations, site plan, hydraulic profile, etc.
      iii. Geared toward design build project
      iv. One hard copy to WQIF, OWE, VRLF (if needed) initially
      v. One PDF and one hardcopy of final plans and specifications to OWE
      vi. Review time 30-60 days per submittal
      vii. Conditional CTC issued on FER
      viii. Plans and specifications due 180 days prior to the desired issuance of a CTO
      ix. Deficiencies found in plans and specifications must be corrected regardless of status

2. Other submissions to include:

a. Plans and Specifications
b. Design calculations with explanatory text as needed
c. Certification statement for non-WQIF funded components
d. One hard copy to OWE, WQIF,VRLF (if needed) initially (half size preferred)
e. One PDF and one hardcopy of final plans and specifications to OWE
f. Review time 30-60 days per submittal

3. Submission of a Statement of Completion for CTO.

   a. FIRM should contact DEQ 30-60 days prior to issuing Statement of Completion to coordinate inspection.
   b. The inspection will be scheduled as close to the Statement of Completion issuance date as possible
   c. Upon confirmation of the project's compliance with the CTC and after Statement of Completion is received, a CTO is issued by DEQ.

4. DEQ recommendations for full approval process:

   a. Use proven technology or have design basis well established
   b. Provide complete submittal packages
   c. Provide complete contact information
   d. Bring up potentially controversial issues early
   e. Provide background and goal of project
   f. Provide separate calculations
   g. QA/QC all work

C. Abbreviated Administrative Process for Non-WQIF Projects - Projects that fall into this category include; Municipal Sewage Treatment Works, Sewage Collection Systems, Reclamation Systems and Satellite Reclamation Systems.

1. Approval process involves:
   a. Submission of an Application
   b. Attachments (if applicable)
      i. Project Description
      ii. Pump Stations – Reliability Class Worksheet
      iii. Downstream owner acceptance
      iv. Justification for variances from SCAT Regulations
   c. Apply after Plans and Specifications Complete
   d. Apply after VPDES permit obtained
   e. For Sewage Treatment Plants (STPs), design flow must match permitted flow
   f. FIRM must provide signature and seal on certification statement
   g. FIRM assumes responsibility for compliance with design regulations

2. CTO for Projects NOT receiving WQIF funds:
   a. Submission of an Application
   b. Application contains a Statement of Completion
   c. FIRM signs Statement of Completion to certify construction complete in substantial compliance with CTC

d. Provide original to DEQ Regional Office
e. Processed by Water Permit Staff
f. Application is signed by DEQ and becomes the CTC or the CTO
g. Turnaround time about 2 weeks
h. If needed, the CTO will trigger issuance of a new DMR

D. Approval Process for Non-WQIF Project That Involve Greater Than a 25% Capacity Increase or Decrease - Projects that fall under this process include new, replacement, or relocated sanitary sewer mains and force mains that are to be larger or smaller in diameter than the original pipelines; and new or rehabilitated sanitary sewage pumping stations with capacity increase/decrease. This process follows the steps of the Abbreviated Administrative Process for Non-WQIF projects as detailed above with the addition of the following requirements:

1. Demonstrate that the Project meets/exceeds the HRSD Regional Sewage Flow Projection Table or was designed to another standard to be described in the CTC request letter.
2. HRSD has adequate downstream capacity to convey and treat the flows.
3. HRSD has consulted with the affected Locality and there are no detrimental impacts.
4. In order to satisfy these additional requirements, a letter shall be submitted to DEQ that contains the elements in the template letter. The Director of Engineering for HRSD will sign the letter that is to be submitted to DEQ.
   a. Pressure reducing pumping stations (PRS) in Exhibit A;
   b. Pumping station replacement in Exhibit B;
   c. New or replacement pipeline in Exhibit C.

E. Relocation, Replacement-In-Kind, Maintenance or Emergency Projects - The FIRM is to coordinate with the HRSD Contract Specialist if the construction project qualifies for state tax exempt status. The FIRM as an agent for HRSD will request a review exemption from DEQ.
   1. A template letter is included as Exhibit D.

F. On-line Resources within DEQ for Approval Process - Visit VDEQ homepage (https://www.deq.virginia.gov/home) for information on Administrative Approval and status of a project submitted for CTC or CTO.

Exhibit A

Date:

Mr. Robert Smithson, Jr.
Virginia Department of Environmental Quality
Tidewater Regional Office
5636 Southern Boulevard
Virginia Beach, VA 23462

Re: HRSD Example PRS Replacement Project
Notification of Approval and Capacity Verification in accordance with SCAT Regulation 9 VAC 25-790-90. CTC Application

Dear Mr. Smithson,

This letter is in reference to the project listed above and accompanies an application for a Certificate to Construct (CTC). Our request is supported by the following information:

The purpose of this project is to upgrade a pressure reducing station by adding an additional pump. The existing PRS is designed for 4,500 gpm at 70 feet. This project will not be adding new flows to the system; however it will allow additional flow to be conveyed.

The attached Hydraulic Analysis Review Team (HART) report provides flow and pressure conditions used to develop design conditions for this project. This analysis has been performed using available information and tools including the calibrated capacity assessment version of the dynamic regional hydraulic model. It is intended to provide a reasonable design basis for sizing replacement interceptor system infrastructure that, for various reasons, needs to be implemented prior to the approval of the Regional Wet Weather Management Plan (RWWMP).

The HRSD infrastructure downstream from this project has been reviewed and has been verified to have adequate capacity to convey and treat the current flows associated with this project. The PER dated _____ documents the criteria and analysis used in the verification of capacity. Furthermore, the facilities associated with this project will be included in the analyses conducted for the Regional Wet Weather Management Plan.

HRSD, in consultation with the City / County of _____, has reviewed the project scope, the design basis and the sewer system impacts of this proposed project. In addition, HRSD has received all necessary approvals and associated permits.

Sincerely,

Bruce W. Husselbee, P.E.
Director of Engineering

CC: Chief of Planning and Analysis
Chief of South / North Shore Interceptors

Exhibit B

Date:

Mr. Robert Smithson, Jr.
Virginia Department of Environmental Quality
Tidewater Regional Office
5636 Southern Boulevard
Virginia Beach, VA 23462

Re: HRSD Example PS Replacement Project
Notification of Approval and Capacity Verification in accordance with
SCAT Regulation 9 VAC 25-790-90. CTC Application

Dear Mr. Smithson,

This letter is in reference to the project listed above and accompanies an application for a Certificate to Construct (CTC). Our request is supported by the following information:

The purpose of this project is to replace an aging pump station which has become an operational challenge to maintain and the need to address the structural integrity of the existing wet well. The existing station has a firm capacity of _____ gpm at _____ feet. This project will not be adding new flows to the system; however it will allow additional flow to be conveyed. HRSD proposes the new _____ PS to be designed for an interim peak flow of _____ gpm at _____ feet.

The HRSD infrastructure downstream from this project has been reviewed and has been verified to have adequate capacity to convey and treat the current flows associated with this project. The PER dated _____ documents the criteria and analysis used in the verification of capacity. Furthermore, the facilities associated with this project will be included in the analyses conducted for the Regional Wet Weather Management Plan.

HRSD, in consultation with the City / County of _____, has reviewed the project scope, the design basis and the sewer system impacts of this proposed project. In addition, HRSD has received all necessary approvals and associated permits.

Sincerely,

Bruce W. Husselbee, P.E.
Director of Engineering

CC: Chief of Planning and Analysis
Chief of South / North Shore Interceptors

Exhibit C

Date:

Mr. Robert Smithson, Jr.
Virginia Department of Environmental Quality
Tidewater Regional Office
5636 Southern Boulevard
Virginia Beach, VA 23462

Re: HRSD Example IFM Replacement Project
CIP #Ex-001
Notification of Approval and Capacity Verification in accordance with
SCAT Regulation 9 VAC 25-790-90. CTC Application

Dear Mr. Smithson,

This letter is in reference to the project listed above and accompanies an application for a Certificate to Construct (CTC). Our request is supported by the following information:

The purpose of this project is to relocate the existing ____ inch Interceptor Force Main (IFM) under the river due to conflicts with the proposed bridge construction with a ____ inch IFM. This project will not be adding any new flows to the interceptor system and is increasing the pipe size to match the existing pipe diameter at the downstream connection point of the project. The project design flow rate is _____ gpm with a design pressure of _____ feet.

The HRSD infrastructure downstream from this project has been reviewed and has been verified to have adequate capacity to convey and treat the design flows from this project. The Preliminary Engineering Report dated _____ documents the criteria and analysis used in the verification of capacity. Furthermore, the facilities from this project will be included in the analyses conducted for the Regional Wet Weather Management Plan.

HRSD, in consultation with the City / County of _____, has reviewed the project scope, the design basis and the sewer system impacts of this proposed project. In addition, HRSD has received all necessary approvals and associated permits.

Sincerely,

Bruce W. Husselbee, P.E.
Director of Engineering

CC: Chief of Planning and Analysis
Chief of South / North Shore Interceptors

Exhibit D

Date:

Mr. Robert Smithson, Jr.
Virginia Department of Environmental Quality
Tidewater Regional Office
5636 Southern Boulevard
Virginia Beach, VA 23462

RE: (HRSD Project Name & Facility Number)

Dear Mr. Smithson,

HRSD is in the process of finalizing the design of (Project Description, Location and Purpose).

As the design engineer, we are acting on HRSD's behalf to coordinate the approval by permitting agencies. We do not believe that a review by the Virginia Department of Environmental Quality (VDEQ) for this project is necessary because it is a maintenance project whereby there is no change in pipe diameter or capacity. If you concur, please sign below and return a signed copy of this letter. We will then notify the successful contractor for this project to submit a copy of this waiver letter along with an application to VDEQ for sales tax exemption.

Should you have any questions or comments, please contact me at (Consultant's contact information).

Sincerely,

(Consultant's name & title)

VDEQ waives the requirements for a CTC/CTO based on the information presented in the letter dated (date) for the (name of project) project in (city).

If any portion of the scope of the project changes, HRSD and/or the contractor shall contact the VDEQ Regional Office to determine if the CTC/CTO waiver is still valid.

_____ _____
Virginia Department of Environmental Quality Date

End of Section

Section 14 - Coordination of Preconstruction Phase Items

A. Introduction – The following clarifications are presented for submittals and procedures during the preconstruction (bid advertisement / pre-award) phase of projects managed by the Design and Construction Divisions. HRSD uses electronic business processes and systems as well as online construction bid advertisement and bid receipt. This Section does not addresses specific means of interfacing with the Oracle Unifier Enterprise Project Management System and Oracle Enterprise Resource Planning (ERP) Systems, rather general requirements.

B. Coordination with Engineering Contract Specialist - The following are to be provided to the Contract Specialist prior to construction bid advertisement:

1. Updated Opinion of Probable Construction Cost (OPCC) as prepared by the FIRM [*to be provided a minimum of 10 business days prior to the bid release date as agreed to with the Contract Specialist*]. *(Project Manager needs these items for review in order to submit in Unifier for Chief approval).*
2. Justification (letter or memorandum) for established liquidated damages [*to be provided a minimum of 10 business days prior to the bid release date as agreed to with the Contract Specialist*]. *(Project Manager needs these items for review in order to submit in Unifier for Chief approval).*
3. Redline markups of the EJCDC front end sections to the Bid Documents [*to be provided a minimum of 10 business days prior to the bid release date as agreed to with the Contract Specialist*]. *(Project Manager needs these items for review in order to submit in Unifier for Chief approval).*
   a. The FIRM to download the front end documents from *HRSD Design and Construction Standards* on HRSD's homepage.
   b. The Contract Specialist will make appropriate revisions to the referenced sections.
4. Word Document of the Table of Contents [*to be provided a minimum of 10 business days prior to the bid release date as agreed to with the Contract Specialist*]. *(Project Manager needs these items for review in order to submit in Unifier for Chief approval).*
5. Bid form matching OPCC and Measurement and Payments section line number, description, and units (quantities must match on bid form and OPCC). [*to be provided a minimum of 10 business days prior to the bid release date as agreed to with the Contract Specialist*]. *(Project Manager needs these items for review in order to submit in Unifier for Chief approval).*
6. PDF version of Bid Documents (all volumes) [*to be provided a minimum of 7-10 business days prior to the bid advertisement date as agreed to with the Contract Specialist]. (Project Manager needs these items for review in order to submit in Unifier for Chief approval).*
7. Copies of all addenda to be provided to the Contract Specialist as soon as available by the FIRM for distribution to Plan Holders via HRSD Oracle ERP [*to be provided no later than 2 business days prior the scheduled Bid opening to the Contract Specialist*] *(approved by the Project Manager).*
   a. Any addenda issued less than 48 hours prior to the bid opening will be to extend the bid date.

End of Section

Section 15 - Preparation of and Format for Construction Addenda

A. Introduction - The Design and Construction Divisions contract with a wide variety and significant number of FIRMs for design and construction oversight responsibilities for both capital and non-capital projects. FIRMs are responsible to prepare addenda if necessary. The definition for "*Addenda*" in the General Condition Section 00700 of the EJCDC documents is: "*Written or graphic instruments issued prior to the opening of Bids which clarify, correct, or change the Bidding Requirements or the proposed Contract Documents*". This Section establishes a protocol for addenda preparation for projects managed by and thru the Engineering Department. The following requirements will lead to consistency on information within an addendum and enhance the FIRM's ability to prepare consistent Conformed Documents as detailed in Section 16 in this manual.

B. Guidelines and Specific Requirements

1. Per Article 7 "Interpretations and Addenda" in the Instructions To Bidders Section 00200 of the EJCDC documents, the following apply:
   a. All questions about the meaning or intent of the Bidding Documents are to be submitted to the Contract Specialist via HRSD's Enterprise Resources Planning (ERP) System.
   b. Interpretations or clarifications considered necessary by FIRM in response to such questions will be issued by Addenda coordinated with the Contract Specialist and delivered via HRSD's ERP to all registered Plan Holders.
   c. Questions received less than 7 calendar days prior to the date for opening of Bids may not be answered.
   d. Only questions answered by Addenda will be binding.
   e. Oral and other interpretations or clarifications will be without legal effect.
   f. Addenda may be issued to clarify, correct, or change the Bidding Documents as deemed advisable by Owner or FIRM.

2. The Pre-Bid meetings are typically not mandatory so what is discussed in these meetings could provide an unfair bidding advantage for someone in attendance. If items were addressed in the Pre-Bid meeting that could be interpreted as clarifying, correcting, or changing the bidding requirements or the proposed contract documents, then these items must be prepared in the provided Addendum format by the FIRM and provided to the responsible HRSD Contract Specialist for distribution via ERP. The Pre-Bid meeting presentation material, summary of discussion, attendance list and the like will be provided to the responsible HRSD Contract Specialist to be disseminated via the ERP online discussion portal.

3. An Addendum should not be prepared for communication with potential bidders or manufacturer's representatives, unless an issue related to potential change to contract price or time is mentioned. The attached Addenda template shall be used if an addendum is deemed necessary by the HRSD Project Manager and/or FIRM.

4. No Addenda are to be issued within two business days prior to the Bid Opening. All addenda are issued within HRSD ERP system.

5. Descriptive terms in the Addendum shall be limited to the following:
   - ADD
   - CLARIFY
   - DELETE
   - INSERT
   - REPLACE
   - REVISE

6. Copies of all Addenda developed by the FIRM are to be transmitted to the Contract Specialist for distribution to Plan Holders via HRSD's ERP.

7. Confirmation by the Contract Specialist will be made via HRSD's ERP that all Addenda have been received and acknowledged by the Plan Holders.

8. All Addenda are to be acknowledged by the Bidder(s) submitting a Bid.

9. All items included in issued Addenda are to be incorporated into the Conformed Documents detailed in Section 16 in this manual.

C. <u>Exhibit A – Addendum Template</u>

Exhibit A

Date:

AMENDMENT/ADDENDUM NO. ____
TO THE BIDDING DOCUMENTS
for the construction of
PROJECT NAME
CIP No.
[City], Virginia

To All Bidders:

The following changes, additions and/or deletions are hereby made part of the Bidding Documents for the construction of the PROJECT NAME, [City], Virginia, for the HRSD dated [Advertisement Date], as fully and completely as if the same were fully set forth therein.

A.

BIDDERS MUST ACKNOWLEDGE RECEIPT OF THIS AMENDMENT/ADDENDUM IN THE ONLINE SOLICITATION IN ORDER TO SUBMIT BID. FAILURE TO ACKNOWLEDGE AMENDMENT/ADDENDUM WILL NOT ALLOW PROPOSER TO SUBMIT BID.

End of Section

Section 16 - Preparation of and format for Conformed Documents

A. Introduction - The Design and Construction Divisions contract with a wide variety and significant number of FIRMs for design and construction oversight responsibilities for both capital and non-capital projects. As a part of the Bid Phase services, FIRMs are responsible to prepare addenda as necessary, assist HRSD with determining if the apparent low bidder is both responsive and responsible, and making a recommendation for award of a construction project. Following the recommendation for award of a construction contract and prior to the pre-construction meeting with the successful Contractor, the FIRM is to prepare "Conformed Documents". The Conformed Document includes revisions to the Bid Documents that are referenced in the Addenda, Agreement and Questionnaire from the Contractor, and any other changes from the original Bid Documents. These Conformed Documents (Drawings and Specifications) are intended to assist HRSD, the FIRM, Inspectors, the Contractor, the subcontractors, and product vendors easily identify any of the changes made on the plan sheets or specification pages that were modified via Addenda. This memorandum establishes a protocol for Conformed Document preparation for those projects managed by and thru the Engineering Department. No changes other than those described within this memorandum shall be made with the Conformed Documents.

B. Specifications - The Conformed Specifications shall include the following:

1. Specification Cover – the phrase "CONFORMED DOCUMENT" and the DATE shall be added adjacent to the Engineering's or Architect's Seal.

2. Revised TABLE OF CONTENTS with the heading "ADDENDA" and a listing of all addenda generated for the project. The new ADDENDA heading shall be added immediately prior to the BIDDING REQUIREMENTS heading on Page TOC-i.

3. An ADDENDA title page and all generated Addenda shall be included following the TABLE OF CONTENTS.

4. The electronic version of the "Front End" documents, as modified by and furnished by HRSD's Contract Specialist shall be included.

5. The Contractor completed QUESTIONNAIRE, minus financial information, shall be included to replace the original Questionnaire provided with the Front End documents.

6. The Contractor completed VIRGINIA BID BOND (these are not required for Emergency Declaration Projects) shall be included to replace the original Virginia Bid Bond provided with the Front End documents.

7. The Contractor and HRSD completed AGREEMENT shall be included to replace the original Agreement (Section 00520) provided with the Front End documents. HRSD uses the EJCDC C-520 form for typical Design-Bid-Build project delivery.

8. The Contractor completed VIRGINIA PERFORMANCE BOND shall be included to replace the original Virginia Performance Bond provided with the Front End documents.

9. The Contractor completed VIRGINIA PAYMENT BOND shall be included to replace the original Virginia Payment Bond provided with the Front End documents.

10. Annotations in the Technical Specifications sections and paragraphs referenced in the Addenda. The annotations shall be in a "Track Changes" mode with new or replaced text being bold underlined and a line thru any changed or deleted text. The Addendum responsible for the revision shall be noted in {} at the end of the sentence where the Track Change is made. An example would be {*Addenda No. 1*}.

C. Drawings - The Conformed Drawings shall include the following:

1. Drawing Cover Sheet – the phrase "CONFORMED DOCUMENT" and the DATE shall be added adjacent to the Engineer's or Architect's Seal.

2. Annotations on the Drawings as referenced in the Addenda shall be made to the original DWG sheets and regenerated. Changes as a result of Addenda shall be either "clouded" along with the Addendum reference or leader lines pointing to the revision along with the Addendum reference in {}. An example would be {*Addenda No. 1*}.

3. Update the title block on all modified Drawing sheets to reflect "Conformed Drawings".

4. If additional drawing sheets are needed due to additional notes or details, the Drawing sheet number shall be the number of the preceding sheet (at the proper insertion point) with the addition of a ".1". An example would be if a new sheet to follow C-9 is required as per Addenda No. 2, the new sheet would be "C-9.1" and inserted immediately following sheet C-9.

5. Any additional Drawing sheets inserted as a result of an Addendum will necessitate renumbering the total number of sheets and an updated Drawing Sheet Index.

D. Format and Number of Conformed Documents - Electronic and paper submittals (*if requested*) to be delivered at the same time.

1. Electronic Format for Conformed Specifications Manual - A single Portable Document Format (PDF) format file of the Conformed Bid Documents (Project Manual) shall be prepared and delivered to HRSD. The following numbers of copies shall be delivered to HRSD's Project Manager prior to the Pre-Construction meeting with the Contractor for distribution:

   a. For projects that are managed in HRSD's Unifier (Unifier) Enterprise Project Management System, the PDF file shall be uploaded to the proper project and Business Process in Unifier.
   b. For all other projects that are not set up in Unifier, FIRM to supply PDF versions via portable media to both HRSD and Contractor.

2. Electronic Format for Conformed Drawings - A single PDF format file of the Conformed Drawings shall be prepared and delivered to HRSD. The following numbers of copies shall be delivered to HRSD's Project Manager at the same time as the Conformed Specification PDF for distribution:

a. For Capital Projects that are managed in Unifier, the PDF file shall be uploaded to the proper project and Business Process in Unifier.

b. For all other projects that are not set up in Unifier, FIRM to supply PDF versions via portable media to both HRSD and Contractor.

3. Paper Format - Refer to specifics in Attachment A of Section 8 “PER, Design, and Construction Submittal Requirements” or as otherwise negotiated for number of and specifics of paper copies.

End of Section

Section 17 - Tracking of Construction Phase Milestones and Performance Metrics

A. Introduction - The Project Managers / Task Managers administering and coordinating engineered projects are required to track numerous items during the construction phase of a project to verify HRSD's project archives are complete prior to closing out a project. The purpose of this Section is to gain assistance tracking these milestones from the FIRM responsible for construction administration of HRSD's projects. A template form (Attachment A) is provided for this use.

B. Completion and Submittal of Construction Milestone Tracking Form

1. The FIRM shall use the attached template form to create and input dates of the listed milestones for each project the FIRM is managing during the construction phase. Use "N/A" for any items that do not apply to the project.

2. The FIRM shall update and submit a copy of the construction milestone tracking form along with each monthly status report / payment request to HRSD upon start of the preconstruction phase.

3. The Project Manager / Task Manager shall provide a copy of each received construction milestone tracking form if not included in HRSD's Unifier (Unifier) Enterprise Project Management System to the appropriate Chief of Design and Construction.

4. These tracking forms will assist the Project Manager / Task Manager in properly confirming Project Stage Gate in HRSD's Unifier (Unifier) Enterprise Project Management System for CIP projects.

C. Performance Metrics

1. Regular updates, scheduled submittals, and overall timely completion of the construction milestone tracking forms will be used as a Performance Metric for Project Managers / Task Managers and also for the FIRM.

2. The Chiefs of Design and Construction will discuss on a regular basis with the Project Managers / Task Managers whether the goals of submitting monthly updated construction milestone tracking forms to the chiefs are being met.

3. Goals for completion of Contractor's evaluation by a joint effort by the Project Manager / Task Manager and the FRIM shall be within 60 calendar days of the Contractor's final payment request.

4. Goals for completion of the FIRM's evaluation by the Project Manager / Task Manager shall be within 60 calendar days of the FIRM's final payment request.

End of Section

Attachment A

Active Construction Project Tracking Form
Project Name / CIP #

Milestone	Date Completed
DEQ Approval or Waiver	
Final Opinion of Probable Construction Cost Submitted	
Conformed Documents Submitted	
Pre-Construction Meeting Held	
Notice to Proceed (NTP) Issued to Contractor	
Contractor's Preliminary Construction Schedule Submitted	
Hydrostatic Pressure Test	
Interim Record Drawings Submitted	
Final Record Drawings Submitted	
Interim Valve Guides Submitted	
Final Valve Guides Submitted	
Certificate to Construct (CTC) Received from VDEQ	
O&M Manuals Submitted	
Equipment Records Form Populated and Submitted	
Certificate to Operate (CTO) Received	
Certification of Substantial Completion	
Letter of Final Completion Submitted to Contractor	
Contractor's Final Payment Submitted	
Contractor Post Construction Evaluation Completed	
Engineer's Final Payment Submitted	
Engineer / Architect Evaluation Completed	
Letter of Warranty Completion Submitted	

NOTES

- Interim and Final Valve Guides to Operations and CAD/GIS
- Interim and Final Record Drawings to Operations and CAD/GIS
- Engineer Evaluation (within 60 days of Final Payment to Professional Services Firm)
- Contractor Evaluation (within 60 days of Final Payment to Contractor)

Section 18 - Expectations for Construction Administration and Construction Inspection

A. Introduction - HRSD has for many years relied upon FIRMs to provide construction administration and inspection as a natural extension of design and preconstruction phase services for all types of HRSD infrastructure. To document and disseminate our expectations for construction inspectors and/or resident engineers, this Section was developed and intended to be followed. This document provides minimum expectations and is therefore not comprehensive with listing all the skills, knowledge, and abilities that inspectors or resident architects/engineers (RA/RE) must possess to be successful.

Typically, the agreement between HRSD and the FIRM for construction phase services including project management, technical consultation and resident inspection during construction through either the Construction Administration Services or the Field Engineering and Inspection Services as mutually agreed by HRSD and the FIRM will refer to this section of the *HRSD Design and Construction Standards* for clarification between services covered under Construction Administration and Construction Inspection. HRSD expects the FIRM to perform these tasks as required as the prime administrator and inspector on the construction project with HRSD providing only general oversight and coordination.

The expectations in this Section are coded based on HRSD's general experience to indicate whether the individual tasks are a primary responsibility (P) or secondary responsibility (S) as appropriate under the Lump Sum Construction Administration Services (CA) or the Unit Price Field Engineering and Inspection Services (CI). The FIRM may propose different primary and/or secondary responsibilities during negotiations based on their organization and qualifications of staff.

B. Organization of this Section - This document has been divided into main categories as follows:

1. General Expectations
2. Preconstruction
3. General Procedures
4. Tie-In, Shutdown, and Diversion Procedures
5. Line Stop Procedures
6. Trenchless Crossing Procedures
7. Damage Assessment and Claims Procedures
8. Training
9. Record Keeping
10. Staffing
11. Verifications

C. General Expectations

CA	CI	EXPECTATION / TASK
	P	Inspectors should understand the importance of their role in achieving the highest quality construction outcomes and have the technical knowledge, tact, and good judgment to effectively perform observation duties.

CA	CI	EXPECTATION / TASK
	P	Inspectors to fully understand the extent of responsibilities; accepts responsibility; does not overlook potential problems; does not overstep authority; understands supervisor's expectations; and records all verbal instructions in daily reports.
	P	Inspectors' extent of responsibilities includes requiring work in accordance with plans and specifications; does not direct work; points out issues; reviews with supervisor policies and authority to stop Contractor's operations for safety violations or construction deficiencies.
	P	Inspectors to review and be familiar with HRSD, FIRM and Contractor's organization, chain of command and team members.
	P	Inspectors to review and be familiar with administrative and reporting procedures. These procedures should be discussed between the FIRM, Inspectors, Contractor, HRSD, and other stakeholders at the preconstruction meeting.
	P	Inspectors to review and be familiar with contract documents, addenda, changes and other revisions.
	P	Inspectors to review and be familiar with the Bid Documents (drawings and specifications) related to required work, materials and equipment, omissions, discrepancies in and/or between plans and specifications and existing site conditions, common details, trouble areas, and overlooked items.
	P	Inspectors to review and be familiar with shop drawings related to layout, material and equipment, omissions, discrepancies, conformance with actual work performed and equipment installed.
	P	Inspectors to review and be familiar with contract schedule to anticipate work activities and to review time-sensitive submittals and shop drawings.
	P	Inspectors to review and be familiar with permits, approvals and other rights of entry documents issued by federal, state, and railroad or city/county agencies.
	P	Inspectors to interact with Contractor's personnel in business-like, cooperative, and personal manner; with understanding and without prejudice; while protecting interests of HRSD, FIRM and the Public. Inspector and Resident Architect / Resident Engineer (RA/RE) to be "firm yet fair" with Contractor.
	P	Inspectors to be always courteous and helpful to the public. If representatives from the Media or other interested parties ask questions or enter the work zone, inform HRSD Project Manager, HRSD Public Information Specialist and/or Director of Communication as soon as possible. Inspectors are not to represent HRSD with the Media or other similar groups/individuals.
	P	Inspectors to always avoid dictating directions to Contractor's personnel unless specified in the Contract documents; discussing issues directly with Contractor's crew unless the Contractor's designated supervisor is present; taking part in any workforce dispute; and giving specific safety related directions to Contractor unless imminent danger conditions are observed.
	P	Inspectors to observe Contractor's work activities for conformance with plans, specifications, and other contract documents.
	P	Inspectors to comprehend the specifications, conditions of the contract, and plans.

CA	CI	EXPECTATION / TASK
	P	Inspectors to be knowledgeable of HRSD definitions of conflict when situations arise in construction that are not accurately shown on the plans.
	P	Inspectors to be knowledgeable of personal safety issues and informing Contractor on observed unsafe conditions and/or practices.
	P	Inspectors to follow HRSD and regulatory requirements for personal protective equipment (PPE) for the environments and conditions to be encountered.
S	P	Inspectors to understand the importance of specialized inspection, be knowledgeable of them, and processes the necessary certifications where applicable. Types of specialized inspections include, but are not limited, to cathodic protection systems, coating systems, instrumentation and monitoring systems, and pump station and pressure reducing station start-ups.
	P	Inspectors to understand the importance of protective coatings and cathodic protection, and to be knowledgeable of their application/installation, including but not limited to, knowing the proper methods for application/installation and repairs and how to test/inspect the systems to ensure proper application/installation and repair.
S	P	Inspectors to be knowledgeable of how to address issues with inquiring residents, regulators, jurisdictional inspectors, fire marshal, and OSHA.
	P	Inspectors to exercise good judgment and know when to call for assistance. Inspectors should be very cautious and should avoid making "Deals" in the field affecting cost, time, and/or quality.
S	P	Inspectors to assist FIRM and HRSD staff as requested.
	P	Inspectors to be able to enter trenches, manholes, tanks, and other facilities they are responsible to inspect with proper entry and safety equipment and following HRSD safety procedures, their own safety protocols / procedures, and other agency safety procedures per the job site. Inspector shall communicate needs with Contractor and FIRM, as appropriate, to perform inspections, including, but not limited, trench shoring, ladder, confined space gear and certification.
P	S	FIRM is responsible to provide all tools, equipment, and training, necessary to perform inspections to include PPE and safety equipment/gear.

D. <u>Preconstruction</u>

CA	CI	EXPECTATION / TASK
P	S	FIRM and Inspector(s) to conduct pre-construction conference.
P	S	FIRM and Inspector(s) to coordinate with Contractor to establish survey reference points for horizontal and vertical control.
	P	Inspector(s) and Contractor to jointly conduct the preconstruction field survey including the capture of dry day and post rain event photos and video prior to mobilization to the site. Inspectors shall inform HRSD Project Manager when this is planned, as HRSD personnel may desire to be present.
S	P	Inspector(s) and FIRM to review requirements of preconstruction surveys and vibration baseline.

CA	CI	EXPECTATION / TASK
P		FIRM to prepare conformed sets of contract documents by date of preconstruction meeting for distribution to HRSD staff. FIRM to ensure the "Conformed Documents" properly incorporates all addenda. The "Conformed Documents" needs to be checked prior to distribution.
	P	Inspector(s) to be in possession of and use the Conformed Documents
P	S	The FIRM to schedule a meeting between the RA/RE, Field Staff, and HRSD at commencement of construction to discuss expectations and roles of the individuals involved.

E. General Procedures

CA	CI	EXPECTATION / TASK
P		FIRM to issue Notice to Proceed (NTP) to Contractor.
P		FIRM to conduct correspondence with Contractor as required facilitating the project, and forward one (1) copy of all project correspondence to HRSD.
P		FIRM to review and approve schedule of values submitted by Contractor.
P		FIRM to review and approve shop drawings, equipment submittals, construction drawings and erection drawings submitted by Contractor for compliance with the construction plans and specifications.
P		For Virginia Clean Water Revolving Loan Fund (VCWRLF) projects, FIRM to review and approve Contractor submittals related to the American Iron & Steel requirement as well as maintain documents, certifications and tracking system for VDEQ audits if requested.
P		For Virginia Clean Water Revolving Loan Fund (VCWRLF) projects, FIRM to review, approve, and retain documents related to Contractor's compliance with the Davis Bacon wage classification requirements and submit wage certifications from Contractor's payment requests to VDEQ.
P		FIRM to review and approve laboratory, mill and shop tests reports of equipment and materials submitted by Contractor.
P		FIRM to prepare proposals, work change directives and change orders as required, prepare independent estimates of cost and time impacts, negotiate acceptable agreements with Contractor for HRSD approval, and document all time and material work orders on a daily basis.
P	S	FIRM and Inspector(s) to review progress schedule submitted by Contractor, monitor actual progress, and prepare as built progress schedule as required.
P	S	FIRM and Inspector(s) to conduct shop and field tests for pipe, machinery, equipment, and materials including any off-site witness tests as required by Contract Documents.
P	S	FIRM to contract for and administer outside testing services procured by HRSD for concrete, soils and specialty testing as specified.
S	P	Inspector(s) to assist FIRM with field testing efforts and specialty inspections as required.
P	S	FIRM and Inspector(s) to respond to requests for information, inquiries, proposals, and suggestions submitted by Contractor.

CA	CI	EXPECTATION / TASK
P	S	FIRM and Inspector(s) to resolve changed site conditions and design conflicts and prepare supplemental drawings and sketches to resolve conflicts as required.
P	S	FIRM and Inspector(s) to review and approve requests for progress payments submitted by Contractor for compliance with the work performed.
P	S	FIRM and Inspector(s) to conduct periodic on-site job meetings with Contractor to discuss schedule, progress, problems, coordination of activities with existing HRSD facilities, etc.
P	S	FIRM to provide specialized inspection for mechanical, electrical, instrumentation and control, etc. as required.
P	S	FIRM and Inspector(s) to reject unsatisfactory work performed and equipment and materials submitted by Contractor.
P	S	FIRM and Inspector(s) to notify HRSD of project status and potential problems.
P	S	FIRM and Inspector(s) to review operation and maintenance manuals submitted by Contractor.
P	S	FIRM and Inspector(s) to review performance tests for equipment and processes.
P	S	FIRM and Inspector(s) to conduct substantial completion and final inspections, prepare punch lists and establish warranty period.
P	S	FIRM and Inspector(s) to assist in resolving warranty issues.
P	S	FIRM and Inspector(s) to assist in startup of new facilities and troubleshooting.
	P	Inspector(s) to coordinate activities of Contractor with other consultants and/or contractors working on the site.
	P	Inspector(s) to coordinate activities of Contractor with HRSD to prevent interference or interruption of safe and reliable operation of existing HRSD facilities.
	P	Inspector(s) to coordinate preparation of spare parts lists and turnover of spare parts to HRSD by Contractor.
P	S	FIRM and Inspector(s) to coordinate equipment and system training by equipment vendors.
	P	Inspector(s) to attend daily, weekly, and monthly progress meetings as appropriate.
	P	Inspector(s) to inform supervisor promptly of observed deficiencies in materials, equipment, workmanship, or other adverse conditions; slowdowns, delays and slippages in progress or ability to meet schedules and deadlines; any situation or condition that may result in a dispute or claim; safety related concerns; and concerns raised by the Public, locality inspectors or other individuals at the site.
	P	Inspector(s) to coordinate with Contractor to ensure site is clean, organized and picked-up daily.
	P	Inspector(s) to inspect materials and equipment for conformance with approved shop drawings, plans, specifications, and any change orders, potential change orders, Request for Information (RFI) etc. This must be performed immediately after materials or equipment is delivered. Any discrepancies need to be brought to the attention of the RA/RE immediately.

CA	CI	EXPECTATION / TASK
	P	Inspector(s) to have copies of all approved shop drawings in the field for review and to understand the purpose of materials and equipment.
	P	Inspector(s) to observe installation of all buried pipe, valves, fittings and other buried assets. Inspector(s) to staff up accordingly to match Contractor's work crews.
	P	Inspector(s) to advise HRSD Safety Division and HRSD Project Manager of uncorrected unsafe conditions immediately.
S	P	Inspector(s) and FIRM to carefully review Contractor payment claims and reject / return to Contractor if supporting material is not complete (diversity statement, X-Y-Z table of installed pipe, and other contract requirements).
S	P	Inspector(s) to confirm stored material prior to payment claim.
S	P	Inspector(s) and FIRM to review monthly with Contractor status of "As-Built" record keeping and tie approval of monthly pay request from Contractor to meeting these requirements.
P	S	Inspector(s) shall coordinate with Contractor and FIRM on changes to contract drawings to facilitate the FIRM's development of accurate record drawings, including changes resulting from addenda, requests for information, field orders, change orders, and equipment and material substitutions.
S	P	Inspector(s), FIRM and Contractor to coordinate work schedule, sequence of construction, and timely notifications to residents in affected areas in advance of work commencing. Efforts may involve door hangers. Advanced notification efforts are intended to minimize complaints from residents and businesses about lack of awareness of project schedules and impacts.
	P	Inspector(s) to have a copy of the Contractor's Emergency Action Plan (EAP) and must be thoroughly familiar with its content.
	P	Inspector(s) shall be in possession of the most up to date emergency contact information for all involved parties and key individuals.
	P	Inspector(s) to attend and actively participate in regularly scheduled construction progress meetings per requirements of Contract Documents.
S	P	RA/RE / Inspector(s) and FIRM to be knowledgeable of Work Change Directives, field orders, Contractor proposed alternate products and when to use these.
S	P	Inspector(s) and FIRM to be knowledgeable of individuals responsible for construction activities and authority of each.
	P	RA/RE / Inspector(s) need to respond promptly on RFIs and Change Proposals.
	P	Inspector(s) need to receive field copies of all RFI's, Change Orders, Field Orders etc. This information should be marked up on their plans and specifications as required.
	P	RA/RE / Inspector(s) to coordinate with Contractor on providing proper notification of shutdowns to affected parties including HRSD Operations and Locality field crews to be involved.
	P	RA/RE / Inspector(s) to notify HRSD if Contractor attempts to operate a HRSD, Locality, or Private main line valve or air vent.

CA	CI	EXPECTATION / TASK
	P	Inspector(s) may be interviewed by HRSD staff if a specific incident or accident occurs on the site (may include, but not limited to, HRSD Project Manager, HRSD Safety Manager - safety / injury issues; HRSD Water Quality Department - spills / SSO; HRSD Real Estate Manager - insurance / damage claim by resident or motorist).
S	P	Inspector(s) to report any accidents or interruptions of existing HRSD facility operations to HRSD.
S	P	Inspector(s) and FIRM to request pump station keys back from Contractor / subcontractors following Final Completion being achieved for a project involving access to a HRSD pump station.
S	P	Inspector(s) and FIRM to be knowledgeable of definition and procedures to achieve Substantial Completion. Warranty period commences after Substantial Completion is achieved.
S	P	Inspector(s) and FIRM to be knowledge of definition and procedures to achieve Final Completion following Substantial Completion.
S	P	Inspector(s) to coordinate with Contractor on force main projects to complete condition assessment activities on HRSD assets (pipelines, valves, etc.) as required in Contract Documents.
S	P	Inspector(s) to notify HRSD and FIRM when any previously unknown utility or obstruction that causes a vertical or horizontal change to the intended buried pipe alignment to obtain an approvable resolution. Inspector shall verify these changes are recorded on the Interim and Final Record Drawings along with the utility or obstruction that resulted in the change if the utility or obstruction remains following pipe installation.
	P	Inspector(s) to be aware of all work performed for others by Contractor outside the limits of the project when and only if prior approval granted by HRSD's Project Manager for Contractor to perform this work.
	P	Inspector(s) to track the listed required inspections related to ductile iron pipe: proper storage and handling to include checking for ovality after pipe is stored for a long period of time; interior coatings; cutting or tapping lined pipe in accordance with proper procedures in manufacturer's installation guide; proper reapplication of coatings after cutting/tapping per manufacturer's recommendation; proper installation of restraint system or restrained joints per manufacturer's recommendations; proper cadwelding directly onto pipe to avoid damage of interior coating; and proper wire connection to bonding plates.
	P	Inspector(s) to track the listed required inspections related to PVC pipe: proper storage on and off-site to include checking for signs of UV degradation; proper handling of pipe; proper bedding and backfill in accordance with the contract documents for PVC pipe; proper installation to include looking out for over insertion of spigot into bell, over deflection of joints beyond manufacturer recommendations, and proper fusing procedures; installation of tracer systems (such as wire, tape, balls) in accordance with the specifications; use proper tapping saddles for field taps to prevent pipe fractures; proper handling to prevent cracks; proper restraint system per manufacturer recommendations.

CA	CI	EXPECTATION / TASK
	P	Inspector(s) to track the listed required inspections related to HDPE pipe: proper storage and handling to include inspecting for excessive gouges in pipe; proper installation to include looking out for expansion and contraction per manufacturer recommendations, proper fusing of pipe per manufacturer's guidelines (environment and cooling time); monitoring (fusing) and testing is performed and recorded as recommended by the manufacturer or specified by Contract Documents; and installation of tracer systems (such as wire, tape, balls) in accordance with the specifications.
	P	Inspector(s) to track the listed required inspection on delivery and installation of valves: proper storage and handling of valve to include exercising the valve prior to installation to ensure operability; proper location for valve replacement/installation to include coordinating with HRSD prior to installation and coordinating with FIRM to revise HRSD valve guide; valve is one specified in Contract Documents to include verifying gear ratio and capture legible photo of nameplate on both valve and actuator (if they exist) and provide to HRSD; valve coating intact and not damaged; operating nut or actuator if remotely controlled are intact and not damaged; proper installation per manufacturer's guidelines and Contract Documents to include checking the valve is installed in the proper flow direction, and the valve and valve box are properly aligned (vertically plumb); confirm valve opens and closes in correct direction; and record number of turns required to open/close (perform twice).
	P	Inspector(s) to track the listed required inspection for ball valves and corporation stops: inspect valves for barbs for HRSD Air Vent Verification Rod passing; install corporation stops fully opened; verify proper height/clearance in air vent housing; verify alignment of ball valve; and verify frame and cover set correctly for final restoration.
	P	Inspector(s) to use HRSD Air Vent Verification Rod and check-out / check-in procedure.
	P	Inspector(s) to track the listed required inspection for check valves: confirm operation of swing arm/lever and verify proper flow direction (arrow on valve).
	P	Inspector(s) to track the listed required inspection for sanitary sewer manholes: proper storage and handling of manholes to include checking manhole is not damaged; confirm manufactured or field installed openings/penetrations are in correct location (vertical and horizontal); inspect for proper channel and benching; inspect correct height; inspect concrete and joint material; inspect drop connections into manhole; riser ring installation for frame and cover set properly for final pavement or restoration; coatings are intact and not damaged when applied prior to delivery; and coatings applied per manufacturer's guidelines and tested when applied on site.
	P	Inspector(s) to track the listed issues related to pipe trench: measurement and payment in accordance with the contract requirements; use of proper trench box along with necessary steel sheeting; proper trench width for pipe installation; proper dewatering of the pipe trench; excavation for pipe bells; proper installation of trace wire and pipe warning tape during backfilling operations; trench safety issues.

CA	CI	EXPECTATION / TASK
	P	Inspector(s) to track the listed issues related to pipe joints: Inspector shall have pocket guide for pipe installation as published by pipe manufacturer; use feeler gage to confirm proper gasket installation; review manufacturer's "stab" joint limit marking on the pipe spigot; proper gasket lubrication practices; dispose of damaged gaskets. (Feeler gauge to be documented on daily reports)
	P	Inspector(s) to track the listed required inspections for external pipeline corrosion prevention: proper wire type and insulation colors being installed per Contract Documents; bond cables properly across joints and bonding pads are factory installed prior to the application of the interior lining for pipes to be bonded; proper affixing of wires to pipe to included weld/brazing is done properly to make a strong attachment (test) and not damage the pipeline interior coating; check for proper system isolation (designed cathodic protection (CP) system is providing protection for only area/assets it is designed to protect) to include verifying system is properly isolated and the isolation is working (check for electrical continuity at isolation); periodically check for electrical continuity along CP system; placement of sacrificial anodes in accordance with design and manufacturer's recommendations; verify proper installation of polyethylene encasement bags in accordance with the manufacturer recommendations; tape wrap products to be heat shrunk to fit properly; properly apply field coatings to steel pipe field welds for horizontal directional drill (HDD) pipe in accordance with the manufacturer's recommendations; and pipeline appurtenances are properly protected from external corrosion to include verifying what, if any, corrosion protection should be applied to the appurtenances and fasteners.
	P	Inspector(s) to track the listed required inspections for internal pipeline corrosion prevention: blisters or spalled areas are not present; proper handling of pipe; proper cutting or tapping of lined pipe in accordance with manufacturer's recommendation, Contract Documents and approved by HRSD; field applied repair coatings are in accordance with manufacturer's recommendations for applicability, temperature, environment, cure time and surface preparation.

F. <u>Tie-In, Shutdown and Diversion Procedures</u>

CA	CI	EXPECTATION / TASK
S	P	RA/RE, Inspector(s), and FIRM to review / approve Contractor shutdown / diversion plan / tie-in plan for constructability. Issues for postponing a planned event include Contractor not having adequate time or resources to accomplish what has been submitted; and Contractor not complying fully with the pre-tie-in check list and not ready to accomplish tie-in.

CA	CI	EXPECTATION / TASK
S	P	Inspector(s) and FIRM to review the "point of no return" for a planned tie-in and engage Contractor, HRSD, and Locality in a recommendation to postpone tie-in if necessary. These conditions may be related to changed field conditions, changed weather conditions, excessive flows to handle, Contractor behind planned sequence of events schedule, or malfunctioning equipment.
	P	Inspector(s) to verify proper clear space is maintained under each assembled pipe joint for checking bolts and being able to observe leaks at all pipe joints and fittings not hydrostatically tested.
	P	Inspector(s) to visually observe and check assembled pipe sections for proper assembly, tightened bolts, and thrust restraint.
	P	Inspector(s) to verify proper remedy for any leaks noted from visual observations under line pressure.
S	P	Inspector(s) and FIRM to collect measurements, sketches, and photographs, and review X-Y-Z coordinates collected by Contractor for assembled pipe in the tie-in area.

G. Line Stop Procedures

CA	CI	EXPECTATION / TASK
S	P	RA/RE, Inspector(s), and FIRM to review and approve Contractor's Line Stop Plan for implementation and contingencies.
	P	Inspector(s) to verify Contractor is using the most recent version of HRSD's Line Stop Checklist from *HRSD Design and Construction Standards*, latest edition.

H. Trenchless Crossing Procedures

CA	CI	EXPECTATION / TASK
S	P	RA/RE, Inspector(s), and FIRM to review and approve Contractor's trenchless crossing plan for constructability and contingencies.
	P	Inspector(s) to confirm Contractor is using the most recent version of HRSD's Trenchless Crossing Checklist from *HRSD Design and Construction Standards*, latest edition.
	P	Inspector(s) to monitor potential settlement and void formation in areas of casing and entry/exit pits.

CA	CI	EXPECTATION / TASK
S	P	Inspector(s) and FIRM to track the listed requirements related to bore and jacked casing installation: proper horizontal and vertical alignment; monitor for settlement by visual inspection; conduct pre & post ground penetrating radar (GPR) measurements for voids; upon digging pits, verify soil and groundwater conditions in the geotechnical report and identify potential issues; if conditions are extreme reconsider method of trenchless crossing; conduct soil stabilization prior to work; review Contractor's method of sealing ends; determine how to handle unknowns as undocumented obstructions prior to beginning work; determine exactly where end of casing, if unsuccessfully completed.

I. Damage Assessment and Claims Procedures

CA	CI	EXPECTATION / TASK
S	P	Inspector(s) and FIRM to coordinate with Contractor to include an agenda item at each construction progress meeting related to damage claims and resident complaints.
S	P	Inspector(s) and FIRM to notify and compile information to report of any accidents or resident/business report of damages.
S	P	Inspector(s) and FIRM to notify HRSD Project Manager of any damage reported by residents, property owners or the traveling public.

J. Training

CA	CI	EXPECTATION / TASK
	P	Inspector(s) to be trained for confined space entry and OSHA Standard 29 CFR Part 1926 Safety & Health Regulations for Construction, Sub-parts A thru Z. Confined space entry OSHA 29 CFR 1910.146(g)(4) and OSHA 10-hour Construction Safety & Health.
	P	Inspector(s) to complete training on VDOT Basic Work Zone Traffic Control.
	P	Inspector(s) to be knowledge of and in compliance with regulatory and HRSD procedures for asbestos handling and disposal.
	P	NACE Level 2 certification required for all inspector(s) overseeing coatings and lining related work.
	P	Certified Electrical Inspector – Master certification required for all inspector(s) overseeing electrical related work.
	P	Inspector(s) to have both NASSCO ITCP for CIPP and Manhole Rehabilitation project work.
	P	Inspector(s) to be familiar with and in compliance with HRSD Hot Work Permit requirements.
S	P	Inspector(s) and FIRM to be trained on and proficient with HRSD's Unifier (Unifier) Enterprise Project Management System.

K. Record Keeping

CA	CI	EXPECTATION / TASK
P	S	FIRM and Inspector(s) to maintain complete set of project files at the job site as required (or full access to digital files) and provide this set of project files to HRSD at the completion of the project.
	P	Inspector(s) to prepare daily report including activities and completed tasks; difficulties; controversial issues involving questionable items or disputes; deficiencies and violations; instructions given and received; progress and delays including actions taken or contemplated to minimize delays; equipment in use by Contractor; materials and equipment delivered for installation; photographic documentation of the work; and spare parts provided by Contractor or Vendors.
	P	Inspector(s) to maintain daily records, photographs, temporary valve guides, drawing markups to compare to Contractor records for dispute resolution. These records to be incorporated into the HRSD Unifier Project Management System.
	P	Inspector(s) to capture sufficient photographs of utility crossings, fittings installed with GPS digital camera where appropriate.
P	S	FIRM, RA/RE, and Inspector(s) to include detailed information on monthly status report that accompanies FIRM's payment request on the activities anticipated in the next 30 days. In particular, field activities that involve HRSD Operations staff assistance.
S	P	Inspector(s) and FIRM to confirm Contractor is collecting X-Y-Z field information where required per *HRSD Design and Construction Standards* and in accordance with the Contract Documents.
	P	Inspector(s) to confirm turns open and close for new valves being installed and verify information correctly input on the Interim and Final Valve Guides.
S	P	Inspector(s) and FIRM to record the serial numbers on all new valves and the actuators for inclusion on records transmitted to HRSD for each valve location.
	P	Inspector(s) shall take required measurements and document these. Examples include location of building service connection tee-wye, end of service connection piping, location of valves and fittings, location of utility crossings.
	P	Inspector(s) shall prepare sketches to include pertinent buried items, end of service connections, utility crossings, other items that will be buried, and all ties taken.
	P	Inspector(s) shall take required swing ties to include measurements to two or more permanent structures.
S	P	Inspector(s) and FIRM to observe on going work by Contractor for compliance with the construction plans and specifications with emphasis on critical construction activities such as placement of reinforcing steel and concrete, items being covered up or embedded, pipe laying and testing, equipment placement and testing, etc.
S	P	RA/RE, Inspector(s), and FIRM to prepare and distribute the Substantial Completion punch list and the Final Completion punch list to Contractor and other parties.

CA	CI	EXPECTATION / TASK
	P	Inspector(s) to document any concerns or plan deviations raised by HRSD Operations staff visiting the construction site and discuss with HRSD Project Manager for resolve.

L. Staffing

CA	CI	EXPECTATION / TASK
P	S	FIRM to provide proper inspection coverage for multiple construction crews where work can be covered up quickly as with buried pipe installation and coatings / linings preparation work.
P	S	FIRM to provide proper inspection coverage during tie-ins and 24/7 critical construction activity periods. Contingency planning for backup personnel for exhaustive work schedule and planned or unplanned leave.

M. Verification

CA	CI	EXPECTATION / TASK
	P	Inspector(s) to verify proper storage and protection of materials and equipment.
	P	Inspector(s) to verify Contractor stays within permitted easement limits (does not enter onto private property without acquiring easement) and does not park in unauthorized areas. Inspector(s) to immediately notify HRSD Project Manager if Contractor is not in compliance.
S	P	Inspector(s) and FIRM to verify traffic maintenance plan consistent with Contract Documents and locality approved permit and notify HRSD Project Manager and Contractor if Contractor is not in compliance.
S	P	Inspector(s) and FIRM to verify Contractor's efforts are meeting all environmental/erosion control requirements in the Contract Documents. Inspector(s) to notify HRSD Project Manager if Contractor is not in compliance.
	P	Inspector(s) to verify proper setup by Contractor and procedures are followed for hydrostatic testing of new pipelines. Inspectors to notify Contractor of missed steps that will delay the planned test.
	P	Inspector(s) to verify proper setup by Contractor and procedures followed for soil density testing as required for installation of new buried pipelines.
	P	Inspector(s) to verify pipe (gravity and force main) installed on proper grade to avoid sags or unplanned high point in the pipe. Inspectors to notify Contractor and HRSD Project Manager of any installation that deviates from Contract Documents or approved Work Directives / Change Orders.
	P	Inspector(s) to verify pipe handling procedures for each pipe material being used. Use of a forklift without padded forks (insert fork into fitting) is not allowed for handling fittings to protect inside linings nor chains allowed for lifting pipe or fittings with exterior coatings that may be damaged because of this action.

CA	CI	EXPECTATION / TASK
	P	Inspector(s) to verify other testing to witness and record information including vacuum testing of manholes, concrete cylinder/strength, concrete air entrainment, concrete slump.
S	P	Inspector(s) and FIRM to track the following verifications related to Asbestos Cement pipe installation: confirm pipe outside diameter (OD) and compare to manufacturer published data and shop drawings; and connect new pipe to existing Asbestos Cement pipe with proper adaptors (refer to manufacturer recommendations).
S	P	Inspector(s) and FIRM to track the following verifications related to Asbestos Cement pipe demolition: certified firm to handle Asbestos Cement pipe; break collar verses saw cutting to avoid air/friable particles; follow manufacturer and HRSD safety procedures for handling and transport; proper personal protective equipment and equipment for demolition.
S	P	Inspector(s) and FIRM to track the following required verifications related to Miss Utility coordination: record when “Miss Utility” ticket request called in; record differences marked in field vs. contract plans; review Contractor’s test pit work plan for utility location verification in advance of excavation to avoid conflicts.
S	P	Inspector(s) and FIRM to track the following required verifications related to bedding and backfill: advance written authorization/approval required for additional excavation of unsuitable materials; review of Contractor’s disposal plan for unsuitable excavated materials (dispose to approved sites and not in environmentally sensitive areas); backfill and bedding meet contract specifications (free of boulders, debris and shall be dry); proper backfill compaction in specified lifts, compaction testing where required.
S	P	Inspector(s) and FIRM to track the following verifications related to pipe rehabilitation: review Contractor’s diversion pumping systems; review Contractor’s plan to provide adequate advance notice to affected customers and to avoid or assure customer service interruptions are minimal; verify proper cure times for materials to be used; be aware of effects of temperature variation; follow manufacturer recommendations; inspect to ensure Contractor has taken accurate measurements to all connections; immediately upon pipe lining/curing reestablish service or other connections; verify that all customers are reconnected; adequate grouting between host pipe and liner pipe; ensure adequate support (water pressure if possible) of liner prior to grouting; mix shall be suitable for filling annular space; install grout holes along pipe where possible; inspect grouted pipe where possible.
	P	Inspector(s) to verify with Contractor proper grade and surface elevations intent of Contract Documents verses actual ground elevations.

End of Section

Section 19 - Use of Air Vent Proving Tool ("Whammy Rod")

A. Introduction - In recent past interceptor system force main projects, Contractor installed air vents have not been fully open during final inspection walk-throughs. This has led to delays in getting the force main online by the Contractor having to excavate down to the corporation stop on the air vent assembly and confirming that the corporation stop is in the full open position, and able to pass HRSD's air vent cleaning rod through it. HRSD's Design and Construction Divisions each have an Air Vent Proving Tool, otherwise known as a "Whammy Rod" by the Interceptor System field crews. These tools can be reserved by HRSD Project Managers for use by the FIRM's Inspector prior to final backfilling around each air vent assembly. This Section details the expectations and procedures of how this tool is to be used by the FIRM during construction.

B. FIRM Responsibilities and Procedures - The FIRM shall coordinate with HRSD's Project Manager (PM) and follow the identified steps for use of the Air Vent Proving Tool:

1. Request that HRSD's PM reserve the tool prior to final backfilling around each air vent assembly.
2. HRSD's PM will check out the tool on SharePoint and make available to the FIRM's Inspector.
3. The Inspector shall notify the Contractor immediately of any air vents where the head of the proving tool does not pass through the corporation stop.
4. Follow-up attempts to prove the air vent is passable shall be done after the Contractor has fully opened the corporation stop.
5. The Inspector will coordinate a walk-through with HRSD operations personnel only after all air vents have been proven to be fully open, properly aligned, and in full compliance with the Bid Documents.
6. The air vent proving tool shall be returned to HRSD's PM for making available for other projects.

End of Section

Section 20 - Condition Assessment Protocol

A. Introduction – One of the elements of the HRSD's Management, Operation, and Maintenance (MOM) involves collection of condition assessment information on HRSD's active and planned to be abandoned pipelines including interceptor force mains, gravity sewer mains, and treatment plant process piping. HRSD has established protocols and guidelines for condition assessment data collection activities during the following:

1. Pre-Planning Phase
2. PER and Design Phase

B. Pre-Planning Phase – Condition assessment during a project Pre-Planning Phase is intended to inform condition-based decisions for the following applications:

1. Defining the extent (scope) of pipeline replacement
2. Identifying potential connection locations
3. Assessing pipelines to be abandoned which may provide information useful for estimating remaining useful life (RUL) of similar active pipelines in the system.

C. PER and Design Phase – Capital Improvement Projects provide opportunities to collect pipeline condition data that assists HRSD to better understand the failure risk and condition investigation needs of other pipelines of similar diameter and material in the system. The FIRM shall perform the following:

1. Develop a project specific Condition Assessment Plan describing condition assessment goals and extents during the Planning Phase to be reviewed and coordinated with HRSD Divisions:
   a. Design and Construction
   b. Asset Management
   c. Operations
2. Incorporate the project Condition Assessment Plan into the construction documents and/or Bridging Documents for Design-Build projects, including the following:
   a. Identify condition assessment opportunities such as system diversions and/or bypass operations which may provide interior or exterior access to normally inaccessible active pipelines.
   b. State responsible parties and/or notification protocols (typically 7 days advance notice) for condition assessment data collection activities.

D. Pipe Coupon Data Collection Form – HRSD developed a pipe coupon data collection form template **(Attachment A)** that is intended to fully document pipe coupons or samples obtained from active pipelines. The FIRM's on-site representative is to complete this form when coupons are obtained, submit the referenced form(s) in Unifier, and coordinate with the HRSD Asset Management Division to transfer pipe coupon(s).

E. Technical Specifications – Technical specifications for the collection of condition assessment data will be assigned as follows:

1. HRSD's Asset Management Division will generally be responsible for collecting condition data that requires the deployment of internal / external condition assessment technologies.
2. If the FIRM or Contractor are made responsible for condition assessment data collection, the FIRM is to insert applicable condition assessment technical specifications into the HRSD administered construction documents.

F. Condition Assessment Guidelines – HRSD has developed guidelines to assist internal HRSD staff (or FIRM) in planning condition assessment for the scenarios identified in Section A. These guidelines will be provided by the respective HRSD Project Manager to the FIRM based on the project specific needs. These guidelines may be utilized for interceptor system pipelines and treatment plant piping as appropriate.

End of Section

Coupon Data Collection Form (All pipe materials)

Section 1: General Site Data

1. Date

2a. Facility ID / Asset ID

2b. Line Number

3a. Pipe Diameter

3b. Pipe Material

3c. Other:

4a. Pipe Classification

4b. Nominal Thickness (in)

5. Inspection Reason (check one)

☐ Abandonment ☐ Pipe Rehab ☐ Temporarily Out-of-Service

6. Coupon properly marked? (see Section 3)

○ Yes ○ No

7a. Coupon to be collected? If Yes, complete 7b

○ Yes ○ No

7b. Coupon Tag (YYMMDD_AssetID_UniqueCoupon#)

Section 2: Coupon Collection

If coupon is to be collected:

1. Ensure coupon is properly marked.
2. Wrap sample in plastic.
3. Place waterproof tag with tag name (see item 7).
4. Place in safe, easily accessible place and notify Project Manager for collection.

Section 3: Coupon Marking

Prior to taking photos and measurements:

1. Note flow direction
2. Note clock position A, B, C, or D (see number 10)
3. Note UniqueCoupon#

Example:

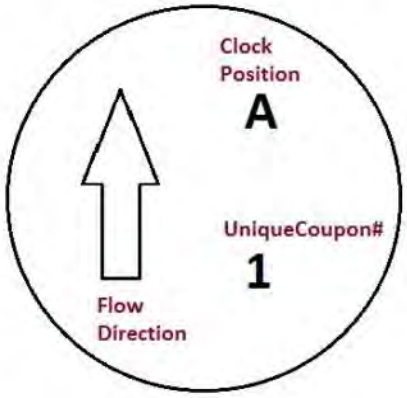

Section 4: Coupon Data

8. GPS Coordinates of coupon location:

Easting (X): _____ Northing (Y): _____ Elevation (Z): _____

9. Brief description of coupon location (nearest intersection, stationing from record drawings, etc.):

10. Coupon clock position

- ◯ 12:00
- ◯ 3:00
- ◯ 6:00
- ◯ 9:00

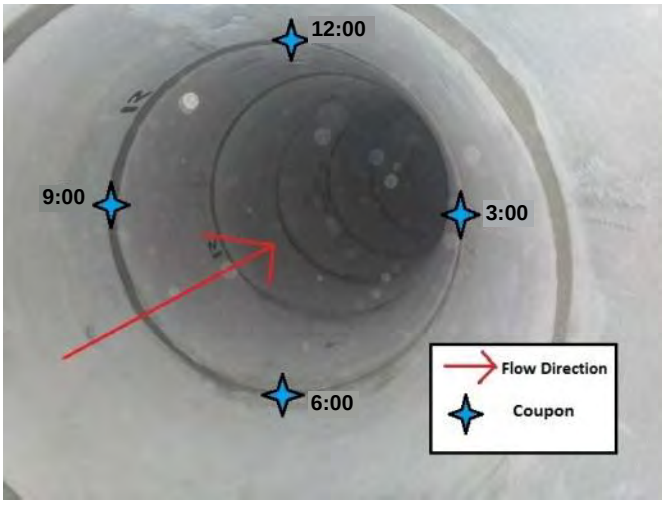

11. Coupon Photos (required)

With proper markings:

☐ Exterior coupon ☐ Interior coupon ☐ Close-Up edges of coupon

NOTE: Attach all photos to this data collection form.

Section 5: Coupon Thickness

Ductile Iron / Cast Iron / AC / PVC / HDPE: Pipe coupon thickness documentation should include the thickness of the material in multiple locations on the coupon making sure to note the maximum and minimum thickness observed.

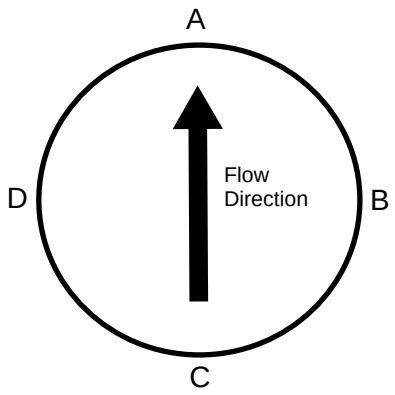

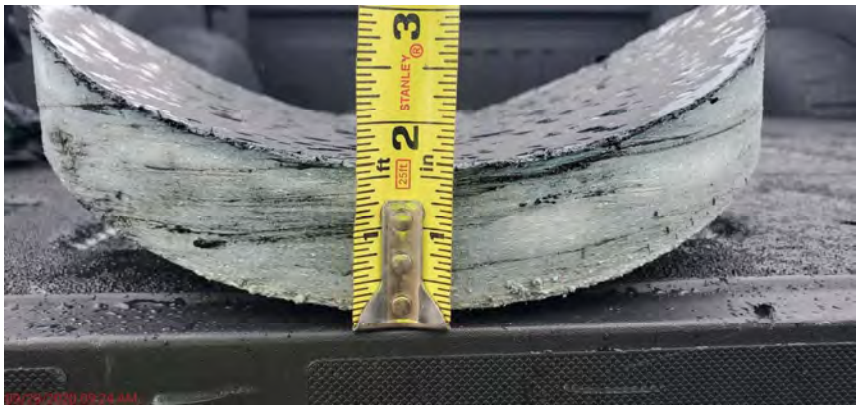

Location A	Thickness (in)	
Location B	Thickness (in)	
Location C	Thickness (in)	
Location D	Thickness (in)	

Additional Notes

Reinforced Concrete Pressure Pipe (RCPP): Pipe coupon thickness dimensions should include the overall thickness, the concrete cover over the steel reinforcement from the interior (Int. cover) and the exterior (Ext. Cover) on each of the identified points of the coupon.

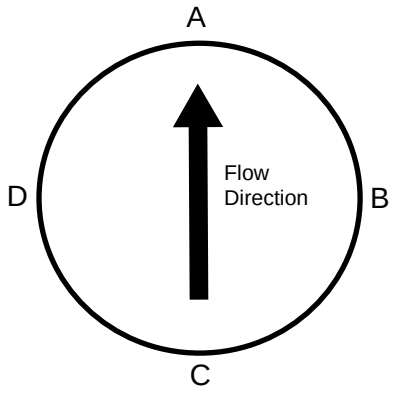

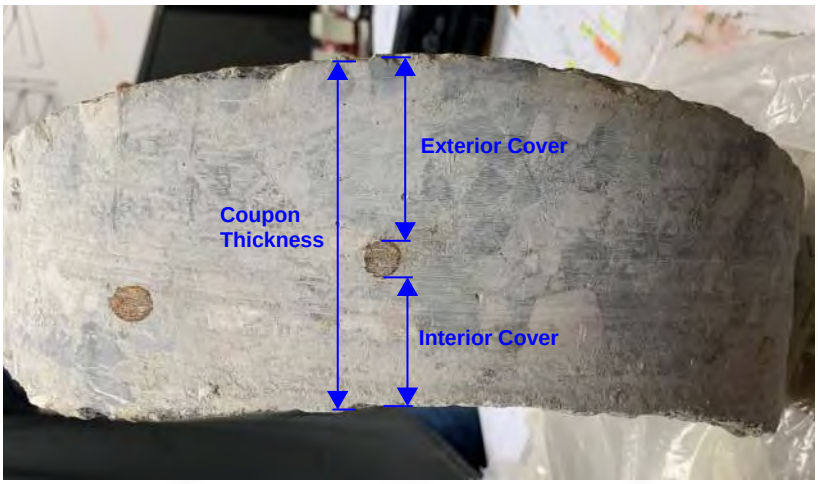

Location A	Thickness (in)		Ext. Cover (in)		Int. Cover (in)
Location B	Thickness (in)		Ext. Cover (in)		Int. Cover (in)
Location C	Thickness (in)		Ext. Cover (in)		Int. Cover (in)
Location D	Thickness (in)		Ext. Cover (in)		Int. Cover (in)

Additional Notes

Prestressed Concrete Cylinder Pipe (PCCP): Pipe coupon thickness documentation should include the thickness of each layer of composite pipe consisting of the interior concrete core (w/ steel cylinder), the exterior concrete core (ECP Only), and exterior mortar layer. Where there is no cementitious layer between the cylinder and wire, record as "N/A" for Exterior Core.

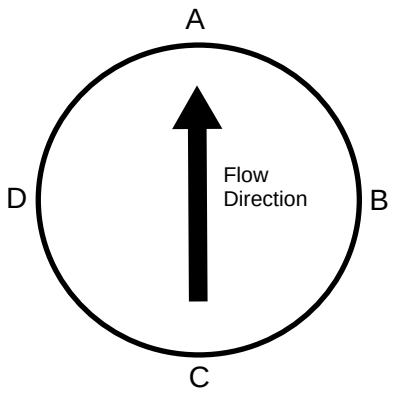

Embedded Cylinder Pipe (ECP)

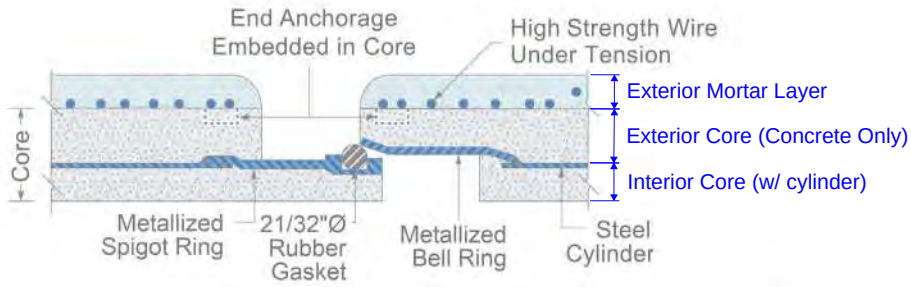

Lined Cylinder Pipe (LCP)

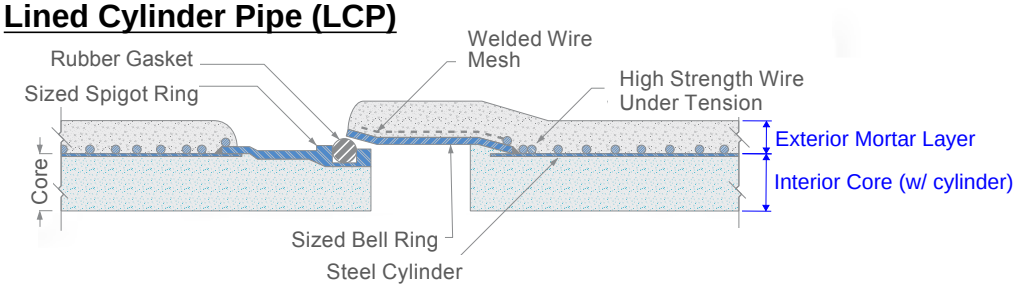

Location A	Int. Core (in)		Ext. Core (in)		Ext. Mortar (in)
Location B	Int. Core (in)		Ext. Core (in)		Ext. Mortar (in)
Location C	Int. Core (in)		Ext. Core (in)		Ext. Mortar (in)
Location D	Int. Core (in)		Ext. Core (in)		Ext. Mortar (in)

Additional Notes

NOTE: The exterior concrete and mortar materials are not retained in the pipe coupon. Direct measurements of exterior materials are to be captured during preparation of PCCP prior to tapping the pipe.

Section 21 - Regulatory Reporting Requirements for Spills

A. Introduction - During the course of construction projects on the collection system, spills from manholes, force mains, etc. occur. These events need to be reported to HRSD personnel immediately.

B. Procedures – The following procedure should be followed for all spills. Failure to report a spill can lead to enforcement action by Virginia Department of Environmental Quality (VDEQ) and/or US Environmental Protection Agency (EPA). Please distribute these phone numbers to the appropriate supervisors. If you have any questions, please contact Lauren Grimmer (HRSD Environmental Scientist) at (757) 460-4245 or 419-8577.

C. Contact Information - The Contractor or Inspector on-site are to contact the appropriate Operations Center Coordinator. The following phone numbers are manned from 5:30 am to 4:00 pm (North Shore) Monday through Thursday and 5:30 am to 4:15 pm (South Shore) Monday through Thursday.

North Shore (Peninsula)	(757) 833-1720
South Shore	(757) 460-7072

If the Contractor has a problem outside of these business hours, then one of the following personnel should be notified. Someone should call you within 15 minutes.

North Shore Duty Supervisor Cell Phone	(757) 613-6600
North Shore Duty Foreman Cell Phone	(757) 613-6601
South Shore Duty Supervisor Cell Phone	(757) 284-8118
South Shore Duty Technician Cell Phone	(757) 284-8120

End of Section

Section 22 – HRSD Safety Program

A. Introduction - This Section addresses the various safety programs and policies of HRSD that apply to design and construction efforts. HRSD staff, as well as professional service firms (FIRM), contractors, and others involved with implementing work on HRSD facilities and on behalf of HRSD are to be in compliance with the following paragraphs. FIRMs will need to verify that appropriate edits are made to Bid Documents to capture these items.

B. Safety Programs

1. Hazard Communication Program – HRSD is required, in accordance with 29 CFR 1910.1200, to inform HRSD and contractor's personnel that work within HRSD of the hazardous chemicals on site. HRSD and contractor's personnel may be exposed to these hazardous chemicals while working at HRSD facilities. A written Hazard Communication Program, as well as, Response Procedures, has been developed to inform personnel of the specific hazardous chemicals at HRSD facilities and the related safety information including protective measures, special precautions, emergency procedures and muster points to be observed. The Hazard Communication Program including Safety Data Sheets (SDS) for each hazardous chemical at the HRSD facility site will be made available to contractors. HRSD utilizes an online program for Safety Data Sheets (SDS) known as MSDSonline. Contractors will be provided with the link to MSDSonline. Contractors are responsible for communicating the information contained in the SDS to their personnel working at the HRSD facility. Contractors shall attend an *Outside Contractor Safety Briefing* conducted by the HRSD Safety Division, Plant Superintendent or Lead Operator prior to start of work. Contractors are responsible for informing HRSD of hazardous chemicals they bring on the plant site or to HRSD facilities. Contractors are responsible for obtaining SDS for hazardous chemicals that they are using and storing at HRSD facilities and providing SDS to HRSD upon request. Contractors are responsible for using and storing the hazardous chemicals in an appropriate method while on site at an HRSD facility. Contractors are responsible for the disposal and labeling of hazardous chemicals that they use or store at HRSD facilities.

2. The HRSD Hot Work Permit Program requires that HRSD employees and/or Contractors who perform work involving electric or gas welding, cutting, brazing or similar flame producing or spark producing operations on or in close proximity to (within 25 feet or where posted) hazardous chemical process systems/equipment, within HRSD confined space, or within the fence line/property line of an HRSD Pump Station be issued a hot work permit prior to beginning work. Contractors must attend an Outside Contractor Safety Briefing conducted by the HRSD Safety Division, Plant Superintendent or Lead Operator prior to the start of work. The Contractor must comply with this requirement and obtain a daily hot work permit from HRSD site management before engaging in any hot work. Contractors must utilize their own Fire Watch for hot work permit operations. Note: No hot work is permitted within 50 feet of the methanol storage and feed areas.

3. Lockout/Tagout Program – Contractors are responsible for compliance with the OSHA Lock Out/Tag Out Standard. Whenever Contractors are involved in lock out/tag out

activities at an HRSD facility, the equipment, process, or system shall be locked and tagged out in accordance with the HRSD Lock Out/Tag Out Program by the work center supervisor overseeing the work. The HRSD Supervisor overseeing the work will ensure that the Contractor is shown the location to apply their lock(s) and tag(s). The HRSD employee overseeing the work must be an "Authorized Employee." Only in emergency situations are equipment, processes, or systems shut down by other than an HRSD "Authorized Employee." The HRSD work center supervisor must be notified immediately if this occurs. Whenever Contractors are involved in lock out/tag out activities covered by this program, HRSD and the Contractor will inform each other of their lockout/tagout programs and procedures. The work center supervisor will inform the Contractor on the precautionary measures involved in performing lock out/tag out at the HRSD facility. All Contractors performing work at an HRSD treatment plant or pump station will receive an *Outside Contractor Briefing* prior to starting work. The briefing will be given by the Plant Superintendent, Lead Operator or the HRSD Safety Division. Engineering Project Managers, will specify in contracts, bids, and requisitions that Contractors must comply with the Occupational Safety and Health Administration's (OSHA) 29 CFR 1910.147 standard while working at an HRSD facility.

4. Confined Space Entry Program – The HRSD Confined Space Entry Program provides HRSD employee training and awareness of the potential hazards of entering and working in confined spaces. All tanks, manholes, vessels, as well as, other areas designated by signs or otherwise instructed are considered confined spaces HRSD's employees cannot act as "qualified person" for the Contractor, cannot complete confined space entry permits for Contractors, nor will HRSD's owned gas detection monitors or other confined space entry equipment be loaned to the Contractor. The Contractor must comply with all Federal and Virginia OSHA Confined Space Standards. Contractors can request information concerning known hazards of HRSD Confined Spaces. HRSD's Safety Division, Plant Superintendent or Lead Operator will brief the Contractor's key personnel on the confined spaces located on the project site during the *Outside Contractor Safety Briefing*.

5. Plant Access Procedures for Contractors Performing Long-Term Projects at HRSD Treatment Plants. [Note: Human Resources and/or IT staff codes the badges and plant staff or Project Manager or Safety Division provides badges to the Contractor.]

    a. The Contractor will be issued a limited number of access badges for distribution among direct employees or sub-contractors. The badges will allow access through the plant gate during normal working hours. Each badge must be assigned to an individual and that individual's name logged on a form to be provided to the appropriate HRSD Plant Superintendent or Project Manager. The Contractor is responsible for periodically verifying the possession of the badges by the assigned individual. Any discrepancy in the possession or location of any badge must immediately be reported to a member of the plant supervisory staff. Any misuse of the badges will result in immediate revocation of access privileges.

b. If a Contractor badge is lost, immediate notification to the Project Manager or Human Resources is required. If necessary, a replacement card will be issued.

c. The Contractor may be issued a limited number of badges for supervisory personnel with extended access to the plant at the discretion of HRSD personnel.

d. In the event that the Department of Homeland Security raises the threat level of the country to "Red", all Contractor access badges will be disabled. Access to the plant at that time will require individual identification verification and entry only via plant staff.

e. Contractor to develop and submit an approvable plan to the HRSD Project Manager for site access procedures and protocols. This plan shall include, but not be limited to, daily log in entry, current emergency contact information, management of gate openings, and daily log out procedures. Plan must be approved by HRSD Project Manager and HRSD Safety Manager. Changes to the approved plan must be submitted in writing and approved by HRSD.

f. Contractor work hours will be discussed and approved by the HRSD plant or facility.

g. Security guards shall be provided if Treatment Plant gates are to be left open during normal work hours. The following are requirements and expectations of a security guard:
   1. The Security Guard is expected to be alert and awake while guarding the open gate.
   2. The Security Guard is expected to check cars and trucks in and out of the plant site.
   3. If the Security Guard is not on duty the plant gate will be closed and secured.
   4. The Security Guard must turn unwanted site visitors away.

h. Perimeter fencing must be maintained during construction at HRSD Workcenters.

i. In the event of a site evacuation, the Contractor Site Supervisor will be notified by plant personnel to evacuate and instructed to report to the muster point location. Plant supervisors will be responsible for accounting for all Contractor firms are present and the Contractor Site Supervisor will be responsible for accounting for contractor personnel.

6. NFPA 70E – Contractors hired to install or modify electrical components will do so in compliance with NFPA 70E. Only qualified HRSD Electricians or Instrumentation employees or qualified Contractors are to perform work on electrical circuits, components, and equipment. Contractors hired to perform electrical work at an HRSD plant or pump station must receive an *Outside Contractor Safety Briefing* by the HRSD Safety Division, Plant Superintendent, or Lead Operator and the HRSD Electricians assigned to that facility. The *Outside Contractor Safety Briefing* will include information on existing electrical hazards, personal protective equipment/clothing requirements, arc

flash labeling system as appropriate, and where to lock and tag out sources of power. HRSD electrical personnel and affected Operations personnel will be involved in the planning of work. Contractors are required to contact HRSD electrical personnel prior to tapping into existing HRSD electrical sources or shutting off equipment (unless an emergency exists.) Warning and/or barricading are required to be used when live electrical components are exposed in areas utilized by HRSD staff.

7. Fall Protection – Contractors that are removing existing guardrails, hatch covers, deck grating, etc. in which an employee could fall four feet or greater must install temporary guardrails. Temporary guardrails include a 42 inch top rail, a 21 inch mid-rail, and a 4 inch toeboard. Temporary guardrails must sustain 200 pounds of pressure applied in any direction. When construction is complete, permanent guardrails must be installed or reinstalled, deck grating replaced and secured down, and/or hatch covers replaced. If utilizing temporary covers, temporary covers must be secured and labeled "hole." Contractors are responsible for compliance with OSHA fall protection standards when working at heights such as on roofs, off of scaffolding, or when using mobile elevated work platforms. .

8. New construction buildings and processes cannot be turned over to HRSD until all safety issues have been corrected. Contact the Safety Division for a safety walk through prior to the release of a new building or processes to HRSD.

9. Excavations and Trenching – Contractors involved in excavation work must be in compliance with OSHA Standards 1926.651 and 1926.652. Trenches 5 feet or greater in depth must have a protection system prior to employees working inside. Trenches or excavations 4 feet or greater in depth are required to have safe access and egress devices located within 25 feet of all workers. Open excavations must have adequate fall protection for personnel if greater than 4 feet and must have adequate protection (.e.g. barricades) if next to areas accessed by vehicles. If an HRSD employee must enter a Contractor's excavation and is unsure about its safety, they must contact the Safety Division immediately. Contractors are responsible for evaluating their trenches or excavations for a safe atmosphere. Contractors are responsible for identifying existing utilities in areas in which they plan to dig. Contractors are responsible for not getting too close to overhead electrical lines with construction equipment.

10. Fire Protection Systems – Anytime a contractor's work may impact installed fire detection or protection systems, the HRSD work center, Safety Division, and Facilities Maintenance must be notified.

11. Housekeeping – The contractor is responsible for the overall housekeeping within their work areas.

    a. All exit doors, electrical panels, fire extinguishers, emergency eyewash/showers, first aid kits must have clear access maintained for emergencies.
    b. Trash and debris must not accumulate nor impede travel on designated walkways.

c. Weeds and grass must be maintained during the project by the contractor in their designated areas so as not to create fire hazard or harborage of vermin.

12. Outside Contractor Briefing – All contractors working at an HRSD Plant or Pump Station will be given an Outside Contractor Safety Briefing by the Plant Superintendent, Lead Operator, or HRSD Safety Division prior to starting work. The briefing will cover the following:

    a. HRSD Safety Rules
    b. Evacuation Procedures
    c. Chemicals on site
    d. HRSD Safety Programs relevant to the work that is being done
    e. Personal Protective Equipment (PPE) Requirements for location

13. Asbestos Awareness Program. HRSD's program objectives include employee awareness of regulations, health issues, and proper procedures for working around and handling products, or materials containing asbestos. Attachment A to this Section is a check list that should be used on each project. For existing HRSD buildings contact the HRSD Safety Division for a list of building materials which contain asbestos.

14. Weapons Policy – Weapons, if brought onto HRSD property, must be kept locked in personal vehicle. No weapons are permitted in HRSD buildings or vehicles.

15. Use of HRSD Equipment – Contractor must provide all equipment necessary to perform work on HRSD property. Use of HRSD equipment is prohibited.
    This includes:
    a. Ladders
    b. Forklifts
    c. Telehandlers
    d. Mobile Elevated Work Platforms
    e. Rolling Gantry Cranes
    f. Slings

End of Section

Attachment A

Asbestos Check List

Concerns:	Yes	No	Unsure
Is there asbestos in the building, is the roof made of asbestos, or is the pipe made of asbestos? (If unsure, contact Safety Division)			
Will the identified asbestos need to be removed or disturbed?			
Is the asbestos removal contractor licensed within the State of Virginia?			
Has the contractor submitted proof of their license?			
Is the asbestos removal job within a building? If "yes", HRSD will need to hire a separate Project Monitor to perform air sampling within HRSD Building.			
Will over 10 linear feet or 10 square feet of asbestos pipe or friable asbestos be removed? Will over 5,585 feet of asbestos roofing be removed? If so, the asbestos removal contractor will need to notify the state of Virginia 20 calendar days ahead of time. (Make sure notification was made.)			
Will the contractor be using OSHA approved removal techniques (i.e. wet methods)? If unsure, contact Safety.			
Does the Contractor's plan include bagging or poly-wrapping the asbestos waste? The handling method and protocol is required in the plan.			
Has the Contractor been specifically instructed to provide HRSD with a manifest stating which landfill the asbestos waste was taken to for disposal? This manifest is a required submittal.			
Will the building be demolished? If yes, an asbestos inspection is required.			
If you checked "unsure" on any of the above items, contact the Safety Division for assistance.			

Section 23 - VDOT 2011 Work Area Protection Manual (WAPM) Requirements

A. Introduction - HRSD's Design and Construction Divisions contract with a wide variety and a significant number of Professional Services firms (FIRMs) for design and construction oversight responsibilities for both capital and non-capital projects. Typically, the FIRM providing the design services will also assemble a team to perform construction administration and inspection (CA/CI) services for HRSD during the construction period. Many of these projects lie within state and locality road rights of way. One of HRSD's top priorities during construction activities is the safety of all staff and HRSD's field representatives. As such, it is crucial that our staff and our contracted work force adhere to the latest federal, state, and locality safety standards.

   The 2011 edition of the *Virginia Work Area Protection Manual* along with updates became effective for HRSD on July 1, 2012. Several localities have already adopted this manual and have been requiring compliance with it. The 2011 *Virginia Work Area Protection Manual* and a presentation highlighting changes from the previous Work Area Protection Manual can be found at the following web link: http://www.virginiadot.org/business/trafficeng-WZS.asp

   This Section establishes expectations and requirements for being in compliance with the 2011 *Virginia Work Area Protection Manual* for all FIRMs providing CA/CI services on behalf of HRSD.

B. Training Requirements for Construction Inspectors - All construction inspection personnel representing HRSD on any construction projects within rights of way exposed to traffic, work vehicles, and construction equipment within traffic control zones must take an approved course and become certified in Intermediate Work Zone Safety Training. HRSD will require a copy of each inspector's certification in order to represent HRSD on a construction project.

C. Personal Protective Equipment (PPE) Requirements – Attachment A details the specifics on PPE and other safety equipment.

End of Section

Personal Protective Equipment Requirements for Work Zone Operations

Workers who install and remove Temporary Traffic Control Devices and/or perform Flagging operations must don the following Personal Protective Equipment during day and nighttime operations:

- Hard Hats with 360° reflective material

- ANSI/ISEA 107-2010 Class 3 High Visibility Safety Apparel

- Type E Trousers (full length waistband trousers or overalls)

- Steel Toed Work Boots

Section 24 - Pipelines and Appurtenances

A. Introduction – The HRSD interceptor system conveys wastewater to the treatment plants through a network of gravity sewers, force mains, pressure reducing stations, pressure control valves, and pump stations. This section includes specifics for design and construction of force mains, sanitary sewer gravity mains and manholes, and valves and other appurtenances. This section also includes specifics for the design of temporary diversion and line stop systems. Designers for planned work on or near HRSD pipelines are to follow these requirements and use the appropriate details contained in Section 36 - Standard Details, appropriate technical specifications contained in Section 40 - Master Specification Sections, and other referenced checklists or forms within this manual.

B. General – The following items apply to all HRSD pipelines.

1. Design Specifics:

a. Design and construction is to be in accordance with current *Commonwealth of Virginia Sewage Collection and Treatment Regulations (SCAT)*.

b. Pipeline design flows are provided by HRSD. HRSD will provide pipe sizes for force mains and gravity mains based on the HRSD regional hydraulic model.

c. HRSD desires to bid alternative materials to increase competition wherever possible. Typical materials used are lined ductile iron, FRP, PVC, and HDPE. HRSD has more experience and operational knowledge with ductile iron for use in force mains than these other materials. Other materials should be considered as appropriate based on site-specific conditions and current technology.

d. Evaluate all utility crossings and critical tie-in points for conflicts. Conflicts shall be determined by the HRSD Project Manager and/or FIRM with concurrence from the Operations Department on a case-by-case basis. Maintain a minimum 18-inch vertical separation for all utility crossings and/or 10-feet horizontal separation from buried utilities unless otherwise approved by HRSD. Other conflicts may be identified on a project case by case basis for such concerns as maintenance of operation of valves and air vents or access to buried pipelines for condition assessment programs.

e. The use of conflict structures is not permitted in the HRSD system.

f. In situations where jurisdictional gravity sanitary sewer mains are crossed over within 36-inches of vertical clearance by the newly installed gravity sewer main or force main or the HRSD force main or gravity main is to be installed within 36-inch vertical clearance under the jurisdictional gravity sanitary sewer mains, these jurisdictional mains shall be Closed Circuit Television (CCTV) inspected

preconstruction and post construction by the HRSD Contractor as a record for potential settling or misalignment issues.

g. Obtain information on existing subsurface utilities to the applicable Utility Quality Level as defined in the A.S.C.E. Standard Guideline for the Collection and Depiction of Existing Subsurface Utility Data (A.S.C.E. 38-02). Locate utilities in pipeline corridor in accordance with Utility Quality Level B. Utilities crossing the proposed pipe shall be located in accordance with Utility Quality Level A.

h. Maintain a minimum of ten feet from the centerline of the pipe to the edge of the easement or right of way. Where easements are through parcels (vs. along the edge), provide minimum of 30 foot wide easement. Refer to Section 36 - Standard Details section for standard easement plat requirements.

i. Provide bollards to protect and locate air vents, valve boxes, manholes, etc. in fields and areas where these structures are likely to be damaged or covered by vegetation or soil. Potential areas include cultivated fields or woods.

j. Do not install lined ductile iron pipe or fittings within 8 feet of chemical injection stations as pipe, gaskets, and the ceramic epoxy lining may be damaged. Consult with the lining manufacturer in such situations.

k. When existing pipe is to be abandoned, consider the need to abandon in place and/or remove if required by the locality or governing authority.For pipe abandoned in place the following shall apply:
    i. All pipe diameters, ensure all sources of flow have been eliminated and dewater in accordance with local, state or federal guidelines
    ii. For pipe up to and including 12” diameter, seal ends using a mechanical plug or cap specifically designed for the pipe being abandoned.
    iii. For pipe greater than 12” diameter, fill pipe with lightweight cellular concrete (flowable fill). Fill shall have a minimum compressive strength of 25 lb/cu ft wet cast density yielding a minimum compressive strength of 70 psi at 28 days. Higher densities may be required by the locality or governing authority.

l. Installation records shall be kept in a digital spreadsheet containing X,Y,Z coordinates for top of pipe elevations at each joint, fitting, valve and connection points. Refer to Master Specification Section 01323 - Record Documents, for X,Y,Z accuracy requirements.

2. Corrosion Prevention:

a. Evaluate the need for and, if required, design for external corrosion protection based on soil conditions or stray currents from other utilities. Provide electrical isolation at outlet valves and connections to adjacent pipeline sections if cathodic protection or bonded joints are required.

b. Evaluate the need for interior and exterior linings and coatings based on specific site conditions.

c. Where force mains discharge into gravity systems, special consideration shall be given to corrosion protection of the force main, manhole and gravity sewer. The design must also minimize turbulence**.**

3. Protective Linings:

a. Corrosion Resistant Lining for pipelines – For ductile iron pipe and fittings, the products described below have been approved and shall be specified as acceptable alternatives. Unless specifically approved by HRSD, all ductile iron pipe and ductile or cast iron fittings used for force main shall be lined. Specific requirements associated with each of these linings are contained in Master Specification 02510 – Ductile Iron Pipe within this manual.

i. Internal Lining – The lining material for pipe and fittings shall be Permox CTF, Induron Coatings Protecto 401 or TNEMEC Series 431.

4. Bid Document Development

a. Where appropriate, utilize details, bid and payment items from the *Hampton Roads Planning District Commission (HRPDC) Regional Construction Standards* (latest edition).

b. Provide details on the drawings indicating bedding, backfill and surface restoration requirements for the project.

c. Pavement replacement details, traffic control and similar type issues must be coordinated with the appropriate municipalities, VDOT, etc.

d. Include adequate survey data, including pipeline centerline stationing. State Plane coordinates – Virginia South / NAVD 88 Datum required. Accuracy should be within 0.1 of foot in the horizontal and vertical plane. All fittings/appurtenances to be GPS surveyed. References on drawings to allow for Contractor to perform field layout of proposed work. Refer to Section 6 - Drawings, Record Drawings, and Valve Guides in this manual for specific requirements.

e. Handling of Lined Ductile Iron Pipe and Fittings – Ductile iron pipe and fittings lined with any of the standard corrosion resistant linings must be handled only from the outside of the pipe and fittings. No forks, chains, choker cables, hooks, or straps shall be placed inside the pipe or fittings for lifting, rigging, positioning, or laying. Straps will be used for lifting.

C. Force Mains

1. Design Specifics:

   a. Use c=130 for force mains for all flow calculations.

   b. Maintain a minimum cover of three (3) feet. Maximum cover is eight (8) feet with exceptions made on a case-by-case basis by HRSD's Project Manager.

   c. Consider potential for future development in determining depth of cover.

   d. Design the vertical alignment of the force main to provide a positive grade. Minimum desirable slope is 0.20%. Include the slope and elevations on the profile drawing. Provide a copy of the continuous profile for HRSD's review as soon as the majority of the crossing utilities have been identified.

   e. Limit maximum pipe joint deflections to 50% of manufacturer's maximum allowable deflection.

   f. When HRSD installs new pipe or replaces force mains under major roadway intersections, the project should be designed and constructed to minimize the need for HRSD to perform future maintenance, repairs, and tie-ins within the intersection. Best practices include: replacing all old piping and valves within the intersection, not leaving any active portion of existing force main within the intersection (which may be a future failure point), and configuring the terminus points of the intersection work to facilitate connection of future pipelines leading to the intersection. Design consideration should be given to enhance future worker safety and minimize future traffic disruptions associated with the operation and maintenance of the new force main.

   g. Verified high points in the pipe profile shall be field tapped for insertion of a corporation stop for an air vent assembly in lieu of factory taps for the air vents based on the Bid Document drawing locations. A stainless-steel tapping saddle shall be used. Where field taps are made the protective lining shall be repaired in accordance with manufacturer recommendations.

   h. Design new force mains for a minimum pressure of 100 psi at the high point in the line. Obtain anticipated range of operating pressures from the HRSD Project Manager. This may require higher design pressures but will not be used to justify lower design pressures.
      i. HRSD will run the Interceptor System model to verify positive pressures at minimum flows or indicate the need for pressure sustaining valves.

   i. Provide positive means of removing air from the ends of the lines during testing and all operating modes.

j. Isolation valve placement shall be:
   i. Force main valve placement at 2,500 to 3,000 linear feet using best engineering judgment. All mainline valves shall be restrained.
   ii. All pump stations shall have a mainline valve on both sides of the emergency pump connection.
   iii. All major creek crossings shall have a mainline valve, tee and branch valve on each side of the crossing.

k. Obtain local municipality and HRSD input on the location and size of outlet valves. Design in accordance with Section 36 - Standard Details in this manual.

l. The minimum distance between taps on an HRSD force main is 1,000 linear feet. Exceptions will be considered on a case-by-case basis by HRSD Interceptors and the HRSD Project Manager.

m. Indicate the limits of restrained pipe on the profile.

n. Specifics on pipe thrust restraint:
   i. Use manufacturer's standard pipe restrained joints where restraint is required.
   ii. Do not use thrust blocks unless absolutely necessary at tie-ins to existing facilities and only after approval from HRSD Interceptor Operations and the HRSD Project Manager.
   iii. Wedge type retainer glands manufactured by EBAA, Sigma, Smith-Blair Camlok and Ford Meter box are acceptable.
   iv. Proprietary restraint systems, such as the U.S. Pipe "HP Lok" system, shall be considered on a case-by-case basis as recommended by the FIRM and HRSD Project Manager.
   v. In the case of existing unrestrained pipe at tie-in locations, on a case-by-case basis the design team shall carefully consider the application of thrust restraint to the unrestrained pipe.

o. For ductile iron pipe, specify the following:
   i. Use special Class 51 minimum wall thickness.
   ii. Flanged joints, if used, shall be Class 125 per ANSI B16.1.
      1) The use of flanged pipe in buried conditions is not preferred. Use will be considered on a case-by-case basis by HRSD Interceptor Operations and the HRSD Project Manager.
   iii. Standard fittings shall be in accordance with AWWA C110 or AWWA C153.
   iv. Threaded bells shall not be used.

p. Use lined eccentric reducers, match grade at top of pipe.

q. The use of Foster® mechanical joint adaptors, as manufactured by Infact Corporation, for use on ductile iron pipe 6" through 36" diameter shall be allowed on a case-by-case basis. Justification for use shall be project specific and request for approval shall be provided in writing to the HRSD Project Manager.

r. In order to facilitate ease of pipeline tie-in and to correct for minor pipeline alignment discrepancies two (2) ductile iron long body sleeves to be designed at each tie-in. A single ductile iron long body sleeve may be used with the approval of HRSD Interceptors and the HRSD Project Manager based upon the alignment.

s. Provide sequence of construction and tie-in details for connections to ensure that connections can be accomplished without spills or interruptions to service. Use the checklist in Section 26 – "Checklist for Tie-Ins to Existing Interceptor Force Mains" within this manual.

t. Install tracer wire and utility marking tape on non-ferrous pipe installations, and utility marking tape on ferrous pipe installations unless otherwise directed. Tracer wire access boxes shall be installed at a maximum distance of 400 feet. Do not use air vents or valve boxes as tracer wire access boxes. Section 36 – Standard Details, Detail No. 253 - Tracer Wire Locator Box shall be used for the tracer wire access point. There shall be adequate wire in the tracer wire access point to pull wire 24 inches outside of the box. Tracer wire to be tested for continuity as part of acceptance testing.
    i. Copper tracer wire shall be 10-gauge, solid wire with plastic coating.
    ii. Subsurface utility marking tape shall be of a durable, metalized, plastic film, for identification of all sanitary sewer lines. Bright green tape imprinted with the legend "Caution-Sewer Below" shall be used. The utility marking tape shall be manufactured by Griffolyn Co. or approved equal. Tape shall be placed no less than 6 inches and no more than 12 inches below the proposed finished grade.

u. For HDPE or PVC pipe, an appropriately sized mandrel may be required to be pulled through the pipe after installation to verify that allowable deflection has not been exceeded, if there are concerns about a section of installed pipe. Proper design and installation are required related to proper bedding, backfill, and compaction to prevent pipe deflection.

2. Hydrostatic Pressure Test Procedures:

a. Regarding use of the pressure gauge to be used for the hydrostatic test, the following options are identified. Coordinate with the HRSD Project Manager for the option to be utilized:
    i. Contractor to provide the pressure gauge for acceptance test along with a certified validation of recent calibration of this gauge. Calibration shall be within 12 months of planned hydrostatic test date. Contractor to provide a valved connection point to allow installation and removal of the test gauge without affecting line pressure.
    ii. HRSD to provide the pressure gauge for acceptance test along with a certified validation of recent calibration of this gauge. Contractor to provide a valved

connection point to allow installation and removal of the test gauge without affecting line pressure.

b. Hydrostatic tests shall be a minimum duration of one hour. Test pressure at the high point in the new force main shall 100 psi.

c. Contractor shall provide the capability to add water to the line during the test and will be required to add up to the allowable leakage at the end of the test period.

d. Allowable leakage shall be in accordance with Virginia Department of Environmental Quality (VDEQ) SCAT regulations and AWWA C-600 procedures.

e. Contractor shall open all outlet valves and end of line valves to allow testing of all blind flanges, plugs, etc.

f. Contractor shall install corporation stops at ends of line to remove air for testing. Plug these upon completion of testing.

g. Verify the appropriateness of the testing procedure for plastic pipe materials, if used. To account for expansion, prior to testing, HDPE pipe shall be filled to the required test pressure. The test pressure shall be maintained for a minimum of three (3) hours by adding make up water hourly as required. After three (3) hours water shall be added to reestablish test pressure and the actual test may begin.

h. The "Report of Hydrostatic Pressure Test" form to document the results is found in Attachment A to this Section.

i. Provide required pipe restraint to accomplish hydrostatic pressure test.

j. Pressure testing of new force main shall not take place against new or existing HRSD valves or extend into existing pipe or facilities without written approval from the HRSD Project Manager.

k. Hydrostatic pressure tests on taps to Prestressed Concrete Cylinder Pipe (PCCP) shall be for a duration of thirty (30) minutes at 50 psi for all tap sizes.

l. The Contractor or the FIRM shall notify the HRSD Pretreatment and Pollution Prevention (P3) Division and the appropriate Treatment Process Engineer for the receiving HRSD facility prior to discharging water used during hydrostatic testing. Notification shall be made a minimum of 24 hours in advance of the planned discharge.

D. Line Stops

1. The Design and Construction Divisions have seen the need for line stop and bypass system installations on force mains increase dramatically over the past decade. HRSD has also seen an increase in the number of line stop companies entering the wastewater

market over this same period of time. The Master Specification 02531 – Line Stops on Sanitary Sewer Force Main Systems in Section 40 and the Checklist for Line Stop Installation in Section 25 of this manual are to be used for consistency for all line stop submittals and installations on HRSD force mains. This section establishes guidelines for HRSD staff and FIRMs for use and editing the HRSD Line Stop Master Specifications, including FIRM and personnel qualification requirements into the Bid Documents, and specific design considerations for line stops and bypass systems.

2. Design Considerations - The designer of line stops and bypass systems need to evaluate the following risks on a case by case basis:

   a. How long will the line stop/bypass be in place? This issue needs to be discussed with HRSD Interceptor Systems and their knowledge of the force main system to determine if bypass through the line stop housing will be permitted verses a requirement to install additional tapping sleeves and valves for the bypass. The designer shall prepare head loss calculations for all bypass flows proposed through the line stop housing to compare different line stop companies and their published literature on housing design and head losses.

   b. Does the interceptor system have a history of significant debris/rags at pump stations upstream and downstream of the project site? This issue is also important for a bypass design related to clogging risk and pressure spikes in the force main leading to a risk of pipeline failure and sanitary sewer overflows.

   c. Can a zero or low flow (velocity 2 fps or less) situation be created to insert the line stop plug? This issue has arisen numerous times for recent past line stop installation, where the line stop field crew has requested a zero flow during insertion and removal of the stopper unit. This issue needs to be clarified with HRSD Interceptor Systems prior to the Bid Documents being advertised for construction bids.

   d. What type of response would be necessary if the line stop housing becomes clogged and what are the overflow risks? Evaluate responses to include pump and haul scenarios at impacted pumping stations (HRSD, jurisdictional, private), response time to unclog the line stop housing, additional materials on site, and other backup plans. If bypass through the line stop housing is recommended by the designer and confirmed by HRSD, then the contingency plan development, submittal and approval must be incorporated into the Bid Documents.

3. Qualifications to be incorporated into Bid Documents - The following qualifications for the line stop firm and key personnel shall be incorporated into the Instructions To Bidders (Section 00200); Article 3 – Qualification of Bidders. Any revisions to these qualifications shall be coordinated and approved by HRSD's Project Manager and the Engineering Contract Specialist.

   3.01 To demonstrate needed qualifications for the Project, the apparent low Bidder and other Bidders as requested by the Owner or the Engineer shall submit a completed

copy of the attached Questionnaire and documentation of experience required in Paragraphs 3.02, 3.03, and 3.04 within twenty-four (24) hours of the Bid opening. Additional information may be requested after the Questionnaires are received if, in the opinion of the Engineer, the information submitted is insufficient to complete the evaluation of the Bidder.

3.02 Bidders and sub-bidders shall be fully knowledgeable, competent, and experienced and shall meet the minimum requirements defined herein for the construction of line stops for similar projects. The Bidder and/or sub-bidder and their respective superintendents shall have successfully completed projects of similar length/size, material, diameter, and installation conditions as follows:

A. Line stop sub-bidder and the sub-bidder's on-site superintendent shall have experience with installation of at least five (5) line stops on 20-inch or larger cast iron, ductile iron, or prestressed concrete cylinder pressure pipelines over the past five (5) years. Additional line stop sub-bidder experience requirements are listed in Article 3.04 below.

B. Self-performing of line stops by the General contractor shall not be permitted. This includes installation of “bag stops”.

3.03 The Bidder shall provide required documentation for their experience, for sub-bidder’s experience, and for all on-site superintendents’ experience. Documentation shall include project titles, Owner’s and Engineer’s names, addresses and phone numbers, lengths, diameters, and materials of construction, and project values. Attach additional pages to the questionnaire as necessary to provide this information.

3.04 Qualifications of Line stop Sub-Bidder:

A. The line stop sub-bidder shall have a minimum of five (5) years documented, uninterrupted service with furnishing line stop equipment for sanitary sewer force mains on the type and size of pipe described in the description of work. Provide detailed reference information including:

1. Project name, location of the work, and start and completion dates.

2. Description of project including equipment provided, size of pipe, and type of force main.

3. Project owner contact information, including their contact name, address, phone and e-mail.

4. General contractor name, their contact person, address, phone and e-mail.

B. The line stop sub-bidder shall have completed five (5) successful line stop installations for sanitary sewer force main systems over the past five (5) years and shall provide the following information:

1. Project name, location of the work, and start and completion dates.

2. Description of project including services provided, size of pipe, and type of force main.

3. Project Owner contact information, including their contact name, address, phone and e-mail.

4. General contractor name, their contact person, address, phone and e-mail.

C. The line stop sub-bidder shall have a minimum of two (2) line stop superintendents currently employed with their company. Each line stop superintendent shall have a minimum of three (3) years continuous employment with the line stop company and shall provide the following information:

1. Names of a minimum of two (2) line stop superintendents currently employed with line stop sub-bidder, including number of years of employment with line stop sub-bidder's company.

D. Each line stop superintendent shall have completed three (3) successful line stop installations for sanitary sewer force main systems over the past three (3) years. Provide the following information:

1. Project names, location of the work, and start and completion dates.

2. Description of projects including services provided, size of pipe, and type of force mains.

3. Project owner contact information, including their contact name, address, phone and e-mail.

4. General contractor name, their contact person, address, phone and e-mail.

E. The line stop sub-bidder shall have an established training program for their employed line stop superintendents. Copies of the line stop sub-bidder training program shall be submitted. The line stop superintendent shall have appropriate training on the equipment that is to be used. All

line stop superintendents proposed for this work must be graduates of the training program. Submit copies of the following:

1. Copies of line stop sub-bidder training program.

2. Copies of training certifications for a minimum of two (2) line stop superintendents currently employed by line stop sub-bidder's company.

F. The line stop sub-bidder shall utilize a qualified licensed professional engineer(s) to review all orders, ensure proper design, verify tolerances, and ensure that all services (standard or special) are completed in accordance with applicable AWWA, ANSI, and/or ASME codes. This engineer(s) must be capable of quantifying the range of hydraulic loss through the line stop system and have sufficient pipe design and restraint experience/knowledge with (at a minimum) the pipes specifically listed in the description of work. All submittals from the line stop sub-bidder must be stamped by the referenced licensed professional engineer(s).

4. Liquidated Damages - consideration should be given by the designer for Liquidated Damages to be included in the Agreement for Emergency Designation Projects for late delivery and installation of line stops / bypass system after an agreed upon date by HRSD and the line stop company and/or General Contractor.

E. <u>Valves</u>

1. Gate valves and plug valves shall be considered in the design and specified as appropriate per the particulars of each project. At present, HRSD allows both gate valves and plug valves for direct bury applications with approval by the valve manufacturer for such use with raw wastewater.

   a. For large diameter valves, consider the length of bonnet and location of valve nuts (main and bypass) when determining force main alignment.

   b. All valves shall be fully opened and closed for one cycle before installing to verify operation and record actual number of turns. Certified maximum operating torque on the valve shaft and the mechanical advantage of any geared actuator shall be provided by the manufacturer and shall be included on the shop drawing submittal provided to HRSD.

   c. Valves shall be capable of drip-tight, bi-directional shutoff.

   d. Bi-directional hydrostatic testing of valves shall be conducted by the valve manufacturer. A certificate of compliance, including test methods and results, shall be provided to HRSD for each valve and included with the shop drawing submittal to the HRSD Project Manager. Minimal acceptable test pressures shall be in accordance

with applicable AWWA valve standards (C-500, C-509, C-515 and C-517) for the valve type specified.

e. Mainline plug valves to be installed on concrete pipe force mains may require special bedding. The FIRM to evaluate the loading, strain, and settlement potential of the valve and the connecting pipes and develop installation details, plan notes, and technical specification language as needed for the development of the Bid Documents and Drawings.

f. The following requirements shall be used for the specific type of valve to be installed:

   i. Valves three inches and larger shall be designed for a cold working pressure of not less than 150 pounds per square inch and tested at a pressure of not less than 300 pounds per square inch. Valves 16 inch and smaller shall operate in a vertical position and valves over 16 inches shall operate in a horizontal position. Gearing, 4:1 ratio, shall be provided on valves 16 inches and larger. Gear cases and shafts shall be the "totally enclosed type, suitable for buried service." Valves shall be furnished with a standard wrench nut (two inch), shall be of non-rising stem configurations and shall open left (counterclockwise). Valve ends shall be provided as indicated in the construction documents. Specified valves shall be in conformance with one of the following requirements.

      1) Resilient wedge Seated Gate Valve – Shall conform to AWWA C509 or C515 and be fusion bonded epoxy coated on both the interior and exterior of the valve and in accordance with AWWA C550. Resilient seated gate valves shall not be used in the horizontal position.

      2) Double Disc, Parallel Seat Gate Valve – Shall conform to AWWA C500 and shall be coated with an asphaltic varnish in compliance with NSF-61. Seats in the body shall be replaceable without removing the valve from the pipeline. Discs may be free to revolve 360 degrees. Discs shall be cast iron or ductile iron and bronze faced. Valves installed in the horizontal position shall be furnished with bronze rollers, bronze or stainless steel tracks and bronze scrapers. Bypasses shall be provided on double disc gate valves 36 inches and larger.

      3) Eccentric Plug Valve – Shall conform to AWWA C517 and shall have an exterior and interior coating of epoxy. Valve body and plugs shall be ASTM A 126 Class B cast iron or ASTM A-536 Grade 65-45-12 ductile iron with thickness in accordance with AWWA C-517 Plugs shall be solid one piece with a cylindrical seating surface eccentrically offset from the center of the shaft. Plug facing shall be Buna-N with a minimum hardness (Shore A) of 70 durometer. Seats shall be welded in overlay of minimum 1/8" inch thick nickel raised surface. Bearings shall be permanently lubricated 316 stainless steel. Packing shall be multiple v-type or u-cup

type. Washers at the top and bottom of the plug journal shall be provided to keep grit and debris out of the bearings and packing. Plug valves in the horizontal position shall be installed so that the plug rotates upward as the valve opens. The operator nut and stem shall be protected with a collar during shipping and installation.

For exposed service applications plug valve shaft seals shall be externally adjustable and repackable without removing the actuator or bonnet from the valve under pressure. The actuator mounting bracket shall allow access to the packing gland and provide an air gap to visually inspect the packing.

For buried service applications shaft seals shall be fully enclosed and protected from the surrounding groundwater and soil via full circumferential metal to metal contact between the bonnet and the actuator body or by other means as approved by HRSD.

2. Disposition of existing inline valves to be taken out of active service is as follows:

   a. Valves oriented horizontally shall be opened fully and abandoned in place after the valve is inspected for deterioration. If HRSD, or FIRM, determines deterioration may compromise future integrity of the interceptor force main the valve shall be removed.

   b. Valves oriented vertically shall be removed unless otherwise approved by HRSD Project Manager.
      i. For vertically aligned valves that are not practical to remove, then develop a sequence to remove the actuator and working components, and then install a gasketed flange plate.

   c. All existing branch valves on the affected section of the interceptor force main shall be replaced.

3. Automatic air release valves may be approved for use in the HRSD system on a case-by-case basis, reviewed for use and approval by the HRSD Project Manager and with concurrence from HRSD's Operations Department.

F. <u>Gravity Interceptors and Manholes</u>

1. Use n=0.013 for gravity interceptors for all flow calculations.

2. General flow information will be provided based on HRSD's Regional Hydraulic Model. Final line sizing must consider the pump capacity of the pump stations discharging into the line.

3. Provide smooth transitions at connections, manholes and structures to minimize turbulence and release of hydrogen sulfide.

4. For manholes on large diameter lines (>20”), at force main discharge manholes, and at heavily traversed or difficult operating locations, manholes shall be made of corrosion proof materials. Use of corrosion proof materials for manholes, frames and covers at all other locations will be considered on a case-by-case basis as recommended by the FIRM and HRSD Project Manager.

5. Testing

    a. Perform infiltration, exfiltration or air testing in accordance with VDEQ SCAT regulations.
    b. Consider pulling mandrel through completed lines to verify that the pipe is not deflected beyond the manufacturer’s specified deflection limits.

Attachment A

Hampton Roads Sanitation District
Engineering Department
Design and Construction Divisions

Report of Hydrostatic Pressure Test

Date				
Contract				
Type of Pipe				
Pipe Diameter (inch) **[D]**				
Length Tested (feet) **[S]**				
From Station				
To Station				
Location of Test Gauge				
Line Filled for 24 Hours?	Yes		No	
Test Pressure Used (psi) **[P]**				
Start Time of Test		AM		PM
End Time of Test		AM		PM
Allowable Leakage (gal/hr) **[L]**				
Actual Leakage (gallons)				
Test Passed?	Yes		No	

Hydrostatic Test Formula:	Where:
$L = \frac{SD(P)^{0.5}}{148{,}000}$	**L** = Allowable leakage, in gallons/hr. **S** = Length of pipe tested, in feet. **D** = Nominal diameter of the pipe, in inches $(\mathbf{P})^{0.5}$ = Square Root of average test pressure during leakage test, in psig

Remarks:

Signatures:

Inspector	Contractor Individual	HRSD Individual

Distribution: HRSD / Engineer / Contractor

Section 25 - Checklist for Line Stop Installations

A. Introduction - The Design and Construction Divisions have seen the need for line stop and bypass system installations on force mains increase dramatically over the past decade. HRSD has also seen an increase in the number of line stop companies entering the wastewater market over this same period of time. The Line Stop Master Specification 02531 included in Section 40 of this manual strives for consistency for all line stop submittals and installations on HRSD force mains. This section establishes procedures for use of the developed Line Stop Checklist for HRSD staff and FIRMs.

B. Completion and Submittal of "Checklist for Line Stop Installations"

1. The FIRM shall use the attached template form to coordinate with the Contractor to confirm that each step in the planning process for upcoming line stops is well thought out and resources are available.

2. The FIRM shall submit a copy of the completed checklist to the HRSD Project Manager at the completion of each line stop.

3. The Project Manager shall file a digital version of each checklist in the appropriate location.

End of Section

Attachment A

Checklist for Line Stop Installations

This checklist is to be used by the Line Stop contractor as a planning worksheet and progressive sign off on listed steps accomplished during the line stop procedures. This completed form to be presented to HRSD, or acting site representative, at the conclusion of each line stop installation.

√	**Pre-installation and Site Review**	**Technicians sign off**	**Inspectors sign off**
	Force main pressure (psi at intended line stop time)		
	Force main pipe material		
	Force main pipe outside diameter		
	Force main schedule / classification		
	Force main flow rate (gpm at intended line stop time)		
	Verification of minimum distance needed from pipe joint or observed fittings.		
	Verification of egress requirements		
	Verification of rigging and equipment support requirements		
	Verification of line stop insertion time of day and date		
	Determination of need for shift crews to complete job		
	Verification that necessary work permits acquired		
	Verification of handling / disposal plan for any sanitary sewage discharge from the pipe when line stop is removed		
	Verification of line stop pressure withdrawal equalization procedures		
	Verification of completion plug equalization procedures		
	Inspect hot tap machine, cutter size, pilot length, line stop machine and verify all measurements prior to commencing the hot tap.		
	Inspect all pre-assembled joints for integrity		
√	**Equipment / Materials**	**Technicians sign off**	**Inspectors sign off**
	Hot tap fitting		
	Full opening valve		
	Line stop fitting		
	Service valve		
	Hot tapping machine		
	Line stop cutter and pilot assembly		
	Hot tap adapter with vent valve and pressure gauge port		
	Hydraulic power unit and hoses		
	Line stop machine		
	Line stop housing with pressure gauge port		
	Line stop head		
	Completion plug holder		
	Hand tools		
	Pressure gauge and needed piping		
	Soapstone and indicator collet		
	Extra varying sized stopple gaskets		
	Properly sized HDPE bypass pipe (if bypass flow through the housing body is required)		

√	**Installation Procedures**	**Technicians sign off**	**Inspectors sign off**
	Verify HDPE pipe has been properly fused together along with required fittings, that proper length has been measured between line stop housings, and that pipe has been successfully hydrostatically tested if a bypass system using through the line stop housing is to be utilized for required work.		
	Verify alignment of the valve bore with the inside diameter of the fitting after installation of the service valve on the line stop fitting.		
	Verify inspection of service valve and fitting for foreign materials, proper operation and bore size.		
	Verify installation of the hot tap machine, centering it to the service valve.		
	Verify marking for the "Lower In" on the hot tap machine using soapstone or indicator collet.		
	Verify lowering of the boring bar into position.		
	Verify the "Lower In" distance.		
	Verify joint integrity test on final makeup. If joint integrity test is greater than 1.1 times the operating pressure, retract the boring bar and close the hot tap valve.		
	Verify marking the "Pilot To Cutter" and "Cutter On Pipe" using soapstone.		
	Verify marking the "Maximum Cut Out" on the hot tap machine using an indicator collet.		
	Verify the gauge on the air caddy indicates the minimum air pressure (or hydraulic pressure) to operate hot tap machine.		
	Verify pilot penetrates the pipe prior to lowering the "Cutter on Pipe".		
	Verify the "Pilot to Cutter"		
	Verify cutter is tight with a measuring rod when the machine is off.		
	Verify cut out by extending the cutter to the "Maximum Cut Out" mark after cutter has reached the "Book Cut Out" mark.		
	Verify the "Maximum Cut Out" distance has not been exceeded.		
	Verify the boring bar has been retracted and service valve has been closed following completion of tap.		
	Verify the tap has been depressurized prior to removing the hot tap machine.		
	Verify venting fluids have been collected for proper disposal.		
	Record the wall thickness of the removed pipe coupon and present this information along with the coupon to the Inspector.		
	Tag pipe coupon and complete Coupon Data Collection Form		
	Verify the pipe wall thickness is consistent with wall thickness that line stop based upon prior to installing the line stop machine.		
	Verify a joint integrity test performed on final makeup.		
	Verify with the Owner's representative that flow in the pipe is as per approved plan for successful line stop insertion.		
	Verify the line stop head is in the proper set position.		

	Verify proper seal and depressurize downstream of the line stop head.		
√	**Installation Procedures**	**Technicians sign off**	**Inspectors sign off**
	Install HDPE pipe between line stop units if design specifies a bypass through the line stop housing to accomplish required work downstream of line stop(s).		
	Verify completion of required work downstream of the line stop head prior to equalizing pressure on the downstream side of the line stop.		
	Verify equalization of pressure on each side of the line stop plug using a pressure gauge following completion of necessary pipe work.		
	Verify closure of service valve following retracting line stop head.		
	Verify depressurization of line stop machine prior to removing.		
	Verify proper installation of the completion plug into the hot tap adapter following removal of line stop machine.		
	Verify joint integrity test performed on final makeup following attachment of the hot tap machine to the service valve.		
	Verify pressure equalized on the top of the completion plug following opening of the service valve.		
	Verify the completion plug is in the proper set position by measurements.		
	Verify the recommended tightening procedures have been completed prior to attempting to extend and retract plug, assuring completion plug properly set.		
	Release tapping machine from completion plug and retract boring bar.		
	Verify completion plug seal by depressurizing the hot tap machine.		
	Fully retract boring bar and remove hot tap machine.		
	Verify removal of service valve and completion plug holder.		
	Verify proper installation of blind flange to the fitting.		

Section 26 - Checklist for Tie-Ins to Existing Interceptor Force Mains

A. Introduction - FIRMs under the direction of HRSD's Engineering Department, Design and Construction Divisions, are required to work closely with Contractors who are preparing to connect to or work on an active force main. HRSD developed tie-in checklists that have been based upon our progressive learning throughout the years of doing and preparing for tie-ins. The attached checklist is to be used in conjunction with Specification Section 01520 Maintenance of Pipeline Operations in this manual to properly plan and execute the plan for a successful tie-in.

B. Completion and Submittal of "HRSD Checklist for Tie-Ins to Existing Interceptor Force Mains"

1. The FIRM shall use the attached template form to coordinate with the Contractor to confirm that each step in the planning process for upcoming tie-ins is well thought out and resources are available.

2. The FIRM shall submit a copy of the completed checklist to the HRSD Project Manager / Task Manager at the conclusion of a successful tie-in.

3. The Project Manager / Task Manager shall file a digital version of each checklist in the appropriate location.

End of Section

Attachment A
HRSD
CHECKLIST FOR TIE-INS TO EXISTING INTERCEPTOR FORCE MAINS
(to be used in conjunction with Maintenance of Pipeline Operations Specification)

Project Name:		
Location of Tie-In:		Size:
Scheduled Date of Tie-In:	Alternate Date:	
Date of Pre-Tie-In Meeting:	Time of Pre-Tie-In Meeting:	
CONTRACTOR:		
CONTRACTOR'S Contact Person:		Cell Phone:
HRSD Project Manager:		Cell Phone:
FIRM's Contact Person:		Cell Phone:
FIRM's Inspector:		Cell Phone:
Locality where Tie-In will take place:		
Locality Contact Person:		Cell Phone:
Locality Pump Station(s) to be Shut Down:		Time of Shutdown:
Other Locality / Government / Private Pump Station(s) affected by Shut Down:		Why:
Location to take Sewage from Shutdown: (include map and details on receiving facilities) Location to take Grit/Material from Shutdown: (include map and details on receiving facilities)		
CONTRACTOR will Blow Air: ☐ YES ☐NO		Start Time: Air Injection Location:
Planned time at which service will be restored:		A.M. / P.M.
Latest worst-case time at which service will be restored:		A.M. / P.M.
Special Conditions or Requirements:		

Attach Contractor's Work Plan Below

Contractor's Work Plan

(List detailed step-by-step procedure with approximate times
for each step / milestone)

Contractor's Contingency Plan

(List steps to be taken by the Contractor / Subcontractors
if something goes wrong)

Preparation Checklist:

Have the following issues been brought to the Contractor's attention and adequately addressed?

- ☐ Interim Valve Guides submitted and approved
- ☐ Interim Record Drawings submitted and approved
- ☐ Jurisdictional approved Traffic Control Plan
- ☐ Dewatering System; Method _____
- ☐ Number of Crews _____; Number of Workers _____
  (separate crews required for each 12-hour or longer shift)
- ☐ Pipe exposed to limit of tie-in. No additional excavation required for tie-in.
- ☐ Check and confirm dimensions of existing pipe and proposed pipe
- ☐ Stone in Excavation to provide working area
- ☐ Tanker Trucks; number of trucks ____
- ☐ Staging Area of Tanker Trunks near Excavation
- ☐ Confirm length of Vac-haul / Tanker Truck suction hose adequate length for desired wetwell sewage level during pump & haul
- ☐ Suction pipe/well point discharge must be hauled to sanitary sewer
- ☐ HRSD Pump Around & No Charge Policy (4/29/2011)

___

☐ Air Vent must be at high point; will be used to blow off air when pipe is pressurized; Contractor to have a valve and riser pipe available for immediate installation. Contractor to provide a 50 gallon drum at designated Air Vent for any sewage release during air venting.

☐ Compressor (Blowing Air); Include a map of the compressor location if to be used

☐ Confirmation that HRSD has exercised valves per the Valve Operations Request and is prepared for the valve closure / opening support.

☐ Lights on-site and in working condition

☐ If HDD or HDPE pipe bursting prior to tie-in, confirm relaxation time prior to cutting pull heads – TIME:_____

Material Checklist:

MATERIAL	REQ'D #/LENGTH	QUANTITY ON-SITE	VERIFIED BY	DATE
Bends / Fittings				
Sleeves (minimum of 2 long body type)				
Restrained Pipe				
Mega-Lugs or approved equal				
Extra Pipe				
Shrink Wrap or other approved pipe / fitting wrap				
Adaptors to Existing Pipe				
Insulated joint (polyethylene spool piece or as otherwise approved) if specified				
Utility warning tape				
#57 Stone				
Project specific stone and other backfill materials in anticipation of backfilling in heavy rain event.				
Surveying Equipment / GPS Equipment				
Ladders per OSHA regs				
Trench Box / Sheeting				
Lights				
Generator(s)				

MATERIAL	REQ'D #/LENGTH	QUANTITY ON-SITE	VERIFIED BY	DATE
Pipe Saw				
Air compressor and attachments / wrenchs				
Torque wrench(s)				
Fuel for generators and other critical equipment				
Other:				

Acceptance Checklist

Prior to Backfilling

- ☐ Adequate temporary thrust restraint
- ☐ Air Vent riser pipes are installed correctly; corporation stop is OPEN.
- ☐ Joints are to be left exposed while pressure is restored
- ☐ HRSD confirmed that line is ready for testing (air purged from line).
- ☐ Pre Shutdown Pressure has been restored to line for one hour.
- ☐ No leaks by visual check and feeling by hand around joints.
- ☐ Bolts on Mega-Lugs (or other approved system) are tight and wedging nuts are broken off.
- ☐ Measurements and X-Y-Z coordinate data have been taken in the connection area (for record drawings / Valve Guides).
- ☐ Photos of New Piping for GIS
- ☐ Soil density compaction tests performed (if under pavement)

Pressure Before Shutdown:_____Time: _____

Section 27 - Trenchless Crossing Installations

A. Introduction – In this section, information is presented on trenchless crossing techniques under railroads, roadways, waterway, and environmentally sensitive areas.

B. General Evaluation Criteria

1. The FIRM shall consider and evaluate appropriate trenchless technologies including conventional techniques in the preliminary engineering report (PER) stage.

2. Consider space required for setup and installation equipment.

3. Require final acceptance leakage testing and use of a mandrel or other approved method to verify deflection and minimum internal diameter requirements as appropriate.

C. New Trenchless Pipe Installations - FIRMs under the direction of HRSD's Engineering Department, Design and Construction Divisions, are required to work closely with contractors who are preparing to use approved trenchless crossing means and methods for installation of force mains or gravity sewer mains. HRSD developed a checklist that has been based upon our progressive learning by doing and preparing for jack and bore operations. This checklist is located in this standards manual in Section 28 – Checklist for Trenchless Crossing Installations and is to be used, completed and submitted to HRSD jointly by the Inspector and Contractor.

1. Horizontal Directional Drilling (HDD) – HRSD has used HDD primarily for river crossings and other long crossings of environmentally sensitive areas. It can be considered for new construction or pipe replacement.

   a. Measurement and payment for HDD projects shall be on a lump sum basis paid to the Contractor upon successful completion (as defined in the Bid Documents) of each crossing. Successful installation includes verification of hydrostatic and other specified testing requirements.

   b. The FIRM to consider the limitations of materials for use with HDD projects on a case by case basis, and make a recommendation to HRSD during the preliminary engineering phase.

   c. For Welded Steel Pipe (WSP), provide external coatings using fusion-bonded epoxy. Internal linings are also required and may vary depending on the pipe diameter. Perform a corrosion analysis study and specify a cathodic protection system as necessary.

   d. Removal of internal weld beads for 24-inch pipe diameter and larger is required for fused High density polyethylene (HDPE) due to the size of the bead and likely impact on velocity and debris accumulation.

e. Require a ground grid system or other equipment to ensure accuracy of the pipe at the exit point.

f. Require the Contractor to provide a pilot hole survey alignment, to be approved by the FIRM, prior to commencement of the reaming operation.

g. Locate soil borings so that they will not be over the centerline of the pipe. Borings are a potential blowout point for drilling mud.

h. Consider the environmental impacts of this construction method including location of entry and exit points, depth of cover, and disposal of drilling mud and spoils.

i. Consider the land and alignment requirements needed for both the drill rig and the pull-back pipe.

j. Delineate a water source for drilling mud make-up in the contract documents.

k. At the conclusion of a successful HDD project and prior to connection to other pipe sections, XYZ coordinates to be collected by the HDD installer and tied to project coordinates to create accurate recorded installation information to be incorporated into HRSD's record drawings and GIS. This requirement may be waived only with advance approval by HRSD's Project Manager.

2. Jack & Bore and Microtunneling - HRSD has used jack & bore and microtunneling methods in various locations where traditional open cut and HDD are not accessible and/or economically feasible. It should be considered where applicable for new construction or replacement.

   a. Measurement and payment for jack & bore, microtunneling, and similar trenchless methods for installation of casings and pipeline projects shall be on a lump sum basis paid to the Contractor upon successful completion (as defined in the Bid Documents) of each crossing.

   b. Steel pipe shall be used as the casing material and shall be in accordance with the latest edition of applicable ASTM standards unless otherwise approved in writing by HRSD's Project Manager and allowed by the permitting agency.

   c. Permalok pipe joining system may be considered on a case-by-case basis as an acceptable method to butt welds for adjoining steel casing pipe sections.

   d. Casing pipe design shall include casing spacers, bulkhead at each pipe end, and leak detection.

   e. HDPE, Ductile Iron (DI), and Polyvinyl Chloride (PVC) should be evaluated as pipe material for the carrier pipe. Removal of internal weld beads for 24-inch pipe diameter and larger is required for fused HDPE.

f. FIRM shall give special consideration to the extents of the casing pipe in the design to account for future road improvements and for maintenance or repair of the installed pipeline.

g. The bored hole shall be minimally larger than the outside diameter of the casing pipe as over-cutting by the cutting head could lead to excessive soil removal and possible ground settlement.

h. The FIRM shall evaluate if corrosion protection is required on the casing pipes.

i. Consider the environmental impacts of this construction method including location of entry and exit points, depth of cover and disposal of drilling mud and spoils.

j. For slurry microtunneling installations, locate soil borings so that they will not be over the centerline of the pipe. Borings are a potential blowout point for drilling mud. Consider requiring the Contractor to grout the bore holes with cement if practical to reduce a soil fracture.

k. Consider the area needed for both the jacking pit and receiving pit.

l. Jack & bore historically has been used for relatively short crossings or under secondary roadways. Evaluation of appropriateness of this method by the Engineer for each installation is needed.

m. Microtunneling historically has been used for long crossings or heavily traveled roadways. Evaluation of appropriateness of this method by the Engineer for each installation is needed.

3. Ground Penetrating Radar (GPR) shall be considered for use on all projects involving trenchless pipe installation. The GPR testing is recommended for the following:

a. Pre-construction to help identify near surface voids, unknown utilities and obstructions not identified by subsurface utility designation.

b. Following dewatering of the trenchless launching / receiving pits to the planned groundwater elevation and prior to advancing casing or pipe.

c. Post-construction to help identify any voids created as part of the trenchless pipe operation.

d. GPR testing requirements when utilized, including the limits of testing, shall be written into the contract documents by the FIRM. When used, GPR testing shall include a real time imaging, recordable output that can be viewed on a computer screen and printed without the use of proprietary software. The test area shall be laid out in a grid fashion over the existing plans and shall be referenced using swing ties,

State Plane Coordinates, latitude/longitude or other means to allow the contractor to reestablish the grid in order to conduct post-construction GPR testing. The FIRM shall evaluate the subsurface conditions and make recommendations as to the type of GPR required. At a minimum 2D scans and reports shall be required and discussion on the testing done and technology used in final submitted reports. One of the scans to be performed following lowering of the groundwater table to the elevation necessary for preparation for the trenchless installation. Note that GPR results are not reliable below ground water levels.

End of Section

Section 28 - Checklist for Trenchless Crossing Installations

A. Introduction - FIRMs under the direction of HRSD's Engineering Department, Design and Construction Divisions, are required to work closely with Contractors who are preparing to use approved trenchless crossing means and methods for installation of force mains or gravity sewer mains under roadways and waterways. HRSD developed a trenchless crossing checklist that has been based upon our progressive learning by doing and preparing for these installations. The attached checklist is to be used in conjunction with Section 27 – "Trenchless Crossing Installations" of this manual.

B. Completion and Submittal of "Checklist for Trenchless Crossing Installations"

1. The FIRM shall use the attached template form to coordinate with the Contractor to confirm that each step in the planning process for upcoming trenchless crossings is well thought out and resources are available.

2. The FIRM shall submit a copy of the completed checklist to the HRSD Project Manager / Task Manager prior to the trenchless crossing attempt.

3. The Project Manager / Task Manager shall file a digital version of each checklist in the appropriate location.

End of Section

Attachment A

Checklist for Trenchless Crossing Installations

PROJECT NAME:		
CIP NO:		
HRSD PM:		)
ENGINEER:		)
ENGINEER:		)
INSPECTOR:		)
CONTRACTOR:		)
SUB-CONTRACTOR:		)
OTHER:		)

JACK AND BORE INFORMATION			
ITEM	**Description**	**Information Provided (By Contractor)**	**Verified in Field**
1	**Schedule of Trenchless Operations** (Projected Start Date & End Date)		
2	**Location of Trenchless Crossing** (Intersection, Cross Street, Etc.)		
3	**Length of Casing Pipe (ft.)**		
4	**Casing Pipe Diameter (in.)**		
5	**Carrier Pipe Diameter (in.)**		

CONTRACTOR WORK PLAN

(List step-by-step procedures with approximate dates/times)

CONTRACTOR'S ROADWAY SETTLEMENT CONTINGENCY PLAN

(List actions to be taken if settlement is observed in roadway due to trenchless crossing operations)

CONTRACTOR'S OPERATIONAL CONTINGENCY PLAN

(List actions to be taken if a unexpected object is encountered which prevents casing pipe progression)

CONTRACTOR'S EQUIPMENT CONTINGENCY PLAN
(List actions to be taken if an unexpected mechanical failures are encountered)

EXISTING UTILITY COORDINATION CHECKLIST (CHECK IF NOTIFIED)			
√	**EX. UTILITY (INSERT LOCALITY)**	**Emergency Contact**	**Contact Number**
	_____ - Water		
	_____- Sewer		
	_____- Traffic		
	_____- Stormwater		
	Verizon		
	Cox Communications		
	Dominion Virginia Power		
	Virginia Natural Gas		
	Level 3 Communications		
	Other:_____		
	Other:_____		
	Other:_____		
	Other:_____		

SPECIAL CONDITIONS OR REQUIREMENTS

PREPARATION CHECKLIST (PRIOR TO TRENCHLESS CROSSING OPERATIONS)		
√	**Checklist Item**	**Notes/Comments**
	Have proper maintenance of traffic been implemented suitable for this work?	
	Have proper shoring (well sheeted and braced) and dewatering methods been implemented as necessary to provide safe and adequate access?	
	Are there areas outside the excavation where the roadway and/or utilities have been undermined?	
	Are required gas detecting meters on site and operational for pit entry and welding operations?	
	Are all components of trenchless crossing equipment required to successfully complete the bore on site and/or readily available?	
	Are typical spare parts for the trenchless crossing equipment on site and/or readily available?	
	Has the Contractor familiarized himself with the available surface and subsurface data?	
	Has the Contractor, the Owner's Representative, and Locality Representative surveyed the area to identify existing areas of settlement?	
	Has the Contractor, the Owner's Representative, and Locality Representative surveyed the area to identify any existing cracking of pavement?	
	Has the contractor performed a subsurface survey utilizing Ground Penetrating Radar (GPR)?	
	Are specialized bits/augers readily available if hard/course materials are encountered?	
	Are specialized bits/augers readily available if extremely soft materials in encountered?	
	Has a surface settlement monitoring grid system been implemented as required?	
	Has any existing utilities been disturbed, offset, or relocated as a result of jack and bore pit excavation?	
	Other:_____	
	Other:_____	

ACCEPTANCE CHECKLIST (AFTER JACK AND BORE OPERATIONS)

√	Checklist Item	Notes/Comments
	Has the Contractor backfilled the entry/receiving pits in accordance with the contract documents?	
	Has all site restoration been completed in accordance with the contract documents and considered acceptable to the Locality?	
	Did the surface settlement monitoring grid system indicate any surface settlement?	
	Has the Contractor, the Owner's Representative, and Locality Representative surveyed the area to identify new areas of settlement?	
	Has the Contractor, the Owner's Representative, and Locality Representative surveyed the area to identify any new cracking of pavement?	
	Has the contractor performed a subsurface survey utilizing Ground Penetrating Radar (GPR)?	
	Were record documents marked up to record any offsets or replacements of existing utilities?	
	Other:_____	
	Other:_____	

SPECIAL CONDITIONS OR REQUIREMENTS

Section 29 - Rehabilitation of Sanitary Sewer Systems

A. Introduction – In this section, information is presented on processes for rehabilitation projects. Separate sections are also included on cleaning, closed-circuit television (CCTV), diversion pumping, and general items, which apply to most rehabilitation projects. The FIRM shall also be familiar with the *HRPDC Regional Construction Standards* latest edition for the sanitary sewer system rehabilitation means and methods.

B. General Evaluation Criteria

1. The FIRM shall consider and evaluate all appropriate technologies including conventional techniques in the preliminary engineering report (PER) stage.

2. When sizing new piping or bypass systems, the FIRM should seek input from the HRSD Project Manager who will contact appropriate personnel. HRSD has numerous resources available to aid in development of design calculations including both modeled and metered data. If HRSD does not have flow monitoring data, flow monitoring data collection should be considered to determine bypass sizing.

3. Evaluate carefully the special features of existing lines to be rehabilitated (i.e. concrete pipe cradles, previous repair history, etc.) that may have a strong bearing on the techniques or processes recommended.

4. Evaluate potable water needs and availability for installation and testing.

5. Consider space required for installation equipment.

6. Require final acceptance leakage testing or other approved method to verify deflection and minimum internal diameter requirements as applicable to rehabilitation method.

7. Evaluate effect of ground water infiltration on methods proposed.

C. Sanitary Sewer System Rehabilitation

1. Cleaning – All gravity sewers must be cleaned before any rehabilitation process can be utilized. The following items should be considered and specified in cleaning.

   a. Estimate the amount of material that needs to be removed from the line.

   b. Outline or require the Contractor to submit a detailed procedure for removal of obstructions and capturing any loose material removed when cleaning pipe and structures such as manholes and wet wells.

   c. Consider where and how the cleaned material will be disposed.

d. Consider the need to build sediment traps to capture grit or the requirement for diversion pumping during cleaning operations.

e. Require close communication with HRSD and locality stakeholders who will be impacted by cleaning or lining operations.

f. Consider structural integrity of pipe to be cleaned before choosing method of cleaning.

2. Closed-Circuit Television Video (CCTV) – CCTV inspection is required for all rehabilitation projects. HRSD generally has a pre-design CCTV of each proposed project. Require the following minimum requirements for performing CCTV.

   a. Require videos immediately following cleaning and at the completion of the project. If lining is not installed immediately after cleaning, the pipe shall be inspected immediately prior to installation of liner with additional cleaning as required. Evaluate laterals and other points of concern per NASSCO requirements.

   b. Specify the maximum amount of water in the pipe when CCTV is performed. Determine if diversion pumping is required or alternate water removal / inspection method.

   c. Recommend that the FIRM be present during the CCTV process. Specify that Contractor shall complete the post-CCTV of each section and receive FIRM approval prior to moving to the next section.

   d. NASSCO PACP, MACP and LACP shall be adhered to for the coding and reporting of any defects encountered during CCTV operations.

3. Diversion Pumping

   a. HRSD will provide the maximum flows and average flows to be handled by diversion pumping. For low flow collection systems as determined by HRSD, exceptions to the requirements of master specification section 01520 – Maintenance of Pipeline and Pumping Operations will be considered.

   b. Specify the maximum dB limits for the diversion pumping equipment.

   c. No leaking is allowed on diversion piping or pumping equipment.

   d. Maintain sewer service to all customers along the line.

   e. Consider routing for diversion pipe during the PER or design phase. This should typically include approval from the locality where the work is taking place, as well as identification of private property needs.

4. Gravity Sewer Rehabilitation – The following methods have been used or considered by HRSD. Other methods may be considered as appropriate in this rapidly changing market. During the PER phase of design the FIRM shall evaluate rehabilitation methods for suitability and shall perform pipeline assessment certification program (PACP), manhole assessment certification program (MACP) and/or lateral assessment certification program (LACP) inspections on the proposed sections of gravity pipeline designated for rehabilitation in accordance with National Associations of Sewer Service Companies (NASSCO) guidelines.

   a. Cured In Place Pipe (CIPP)

      i. The FIRM shall specify minimum liner thickness. The minimum may be different for different CIPP processes.

      ii. CIPP shall be designed based on the assumption the host pipe is fully deteriorated.

      iii. Determine if material samples are required for post-cure testing. If so, determine how samples will be obtained.

      iv. Provide performance specification for the liners. Require a Professional Engineer, licensed in the Commonwealth of Virginia, to seal the liner structural design.

      v. Utilize existing standards such as ASTM, NASTT, NASSCO, PRC, etc. wherever applicable.

      vi. Require verification tickets for each liner section installed. Each ticket should include resin manufacturer and type, time and date of wet-out and other critical information.

      vii. Provide a watertight seal between the liner and the existing pipe at the manhole.

      viii. Rework the flow line through the manhole to account for the thickness of the liner.

      ix. Require that all water / wastewater be removed from pipe prior to and during installation of liner.

      x. Require that all inflow into pipe (groundwater, laterals and side lines) shall be stopped prior to installation of liner.

      xi. Require that diversion pumping system be activated and flow removed from pipe during cleaning and CCTV inspection.

xii. Require a detailed submittal from the contractor that provides design assumptions, calculation, material properties, and proposed installation approach.

xiii. Continuous temperature monitoring system (Zia Systems or approved equal) and a redundant temperature monitoring system such as thermocouples, shall be utilized as an additional QA/QC measure during the curing process.

xiv. Require final submittal of all temperature data.

xv. Require inspection to be performed by an ITCP (Inspector Training and Certification Program) CIPP certified inspector.

xvi. Require submission of all relevant CIPP submittal documents listed in the NASSCO ITCP CIPP documentation (latest version).

b. Folded and Reformed Liners

i. Specify minimum thickness required.

ii. Evaluate available material types.

iii. Require that diversion pumping system be activated and flow removed from pipe during cleaning.

c. Formed In Place Pipe (FIPP)

i. Specify grouting procedures to be used.

ii. Where man entry is possible, require tapping test with a hammer as a part of the final inspection.

iii. Require that diversion pumping system be activated and flow removed from pipe during cleaning.

d. Sliplining

i. To be considered on a case by case basis

ii. Engineer should review all pipe material available for sliplining and make recommendations

iii. Require grouting of the annular space for all sliplining projects. Engineer to calculate theoretical volume of grout needed and to include in Bid Documents

/ Technical Specifications a means for the Contractor to measure quantity used.

iv. Design and detail a watertight bulkhead between the slipliner and the host pipe at the manholes.

v. Require certified fusion welder if HDPE or fusible PVC is used. Engineer recommendation is required for proposed material and joining method.

vi. Require removal of internal beads flush with pipe wall on HDPE pipe before installing the liner.

vii. Specify minimum SDR or other appropriate thickness.

viii. Evaluate whether diversion pumping is required for installation or if liner can be installed under flow.

e. Pipe Bursting can be considered, and Engineer should evaluate benefits and risks.

5. Lateral Reinstatement – When external excavation is required, Insert–A-Tee is a good installation method which has been used on previous projects. When laterals are internally reinstated and lined, one piece main and lateral systems as manufactured by BLD or LMK (or approved equal) are a good method of reinstating linings. The lining system should include a method of providing a permanent seal between the host pipe and liner at both the lateral to main connection, and the upstream portion of the lateral. This is a developing area and considerable research should be performed before making recommendations.

6. Manhole Rehabilitation – This section covers rehabilitation of manholes and junction chambers.

   a. Utilize diversion pumping if work below the bench is required.

   b. Modify the inverts to provide a smooth flow line through the manhole.

   c. Raise the bench to the top of the pipe, forming a “U” channel through the manhole and provide sufficient slope to make benches self-cleaning when benches must be modified.

   d. Require a system to capture and remove cleaning material from the manhole without entry into the flow line.

   e. Stop all leaks in the manhole before resurfacing, repair, or lining materials are applied.

   f. Evaluate conditions of the frames and covers. The Contractor shall provide frames and covers as required.

g. Remove any steps entirely (minimum one inch recess), and do not replace. Restore surfaces before applying coatings.

h. Sanitary manholes are often exposed to environments with various degrees of aggressiveness thereby degrading the concrete and reinforcing and shortening the useful life of the structures. Choosing the appropriate protective measure should be determined during the preliminary engineering evaluation of the project. For Protective Coatings and Liners for manholes, the FIRM shall evaluate the current conditions of the structure and report findings in accordance with NASSCO MACP Guidelines. Any protective system must be applied in strict accordance with the protective system Manufacturer's recommendations.

7. Post Construction & Rehabilitation Evaluation for Gravity Sewer Mains and Manholes

a. Existing gravity sewer mains or storm mains that are within 36" vertical clearance of the pipeline to be burst shall be CCTV inspected prior to any pipe bursting and following completion of pipe installation by the Contractor as a record for potential future settling or misalignment issues.

b. For manhole rehabilitation projects, bonding of the coating material will be checked during the inspection and photo documentation will be provided. Special care will also be taken to inspect the bulkheads between the host pipe and the rehabilitated pipes in the manholes.

End of Section

Section 30 - Pump Stations

A. Introduction - HRSD owns and operates wet well stations and pressure reducing stations. Wet well stations are sized to receive projected flows from gravity sewers and discharge to force mains. Pressures reducing stations and/or other facilities are sized to maintain the pressure head in force mains within HRSD operating limits. Wet well stations, force mains and pressure reducing stations are all sized and operated in accordance with HRSD's Hydraulic Grade Line (HGL) policy.

1. Wet Well / Dry Well Pump Station - Flows are discharged by gravity sewers or force mains into a wet well from which they are pumped into a force main. The pumps are designed for a flooded suction condition and are in a separate dry well adjacent to the wet well with intake piping leading from the wet well to the pumps.

2. Pressure Reducing Station (PRS) - A pressure reducing station is connected directly to a force main and is used to maintain the pressure on the suction side of the pumps.

3. Submersible Pump Station – The pumps are located in a wet well. These stations are typically for small service areas. Refer to Section 36 - Standard Details, Series 400 in this standards manual for guidance.

B. Description of Operations

1. Wet Well / Dry Well Pump Station

   a. Wet well stations typically use variable speed pumps to match flow fluctuations and minimize turbulence in the wet well to reduce odor, corrosion and air entrainment.

   b. A proportional integral derivative (PID) level controller shall be configured in the programmable controller to control the sewage level in the wet well. The level controller shall vary the speed of the pumps as required to match the pump discharge flow rate to the wet well influent rate. The desired level to be maintained in the wet well will be programmed in the programmable controller as the set point for the level controller. The level controller will compare the actual wet well level to the set point level and output a 4-20mA speed reference signal to the variable frequency drive (VFD) for operating the sewage pumps to increase or decrease the speed of the pump or pumps as required to maintain the set point level.

   c. A standby pump shall be called to operate at the high-water alarm level.

2. Pressure Reducing Station (PRS)

   a. Pressure reducing stations typically use variable speed pumps to match flow fluctuations to lower the pressure on the suction side of the station. Pressure reducing stations do not typically run continuously and are not normally required to operate until the force main flow reaches approximately two-thirds of the design flow.

b. Pressure reducing stations operate by starting the lead pump when the force main discharge pressure increases to a preset high limit. The lead pump speeds up and slows down to maintain the force main suction pressure within a preset range. If the lead pump cannot maintain the force main suction pressure within the preset range, an additional pump or pumps are started and operated together to maintain the suction pressure within the preset range. As the force main discharge pressure decreases to preset lower limits, the pumps are stopped in the reverse order as needed until all pumps are stopped.

c. Provide for piping and valves inside of the pump station so that the force main flows can be pumped in either direction as appropriate with the operation of a minimum number of valves.

C. General

1. Pump stations shall meet the requirements of the *Virginia Department of Environmental Quality Sewage Collection and Treatment (SCAT) Regulations.*

2. Pump stations shall be designed to Hydraulic Institute (HI) Standards to the extent possible. Exceptions to the HI Standards to be discussed with HRSD and approved on a case-by-case basis.

3. Pump station shall be designed in accordance with the HRSD HGL Policy. Pump selection shall be based on the following flow and pressure conditions provided by HRSD and general requirements:

   a. Operating range flows and pressures

      i. Dry weather minimum
      ii. Dry weather maximum
      iii. Wet weather maximum

   b. Pump stations shall be designed with provisions to accommodate future growth based on development trends.

   c. Under typical operating conditions for variable speed drives (VFDs), pumps shall be capable of maintaining wet well level or pressure set point without cycling on/off.

   d. Pumps shall operate within the pump's preferred operating range (POR) in accordance with the HRSD HGL Policy.

   e. In the case where a bypass pumping system is required, the design and operation of the pumping system, whether portable pumps or portable pumps in conjunction with permanent station pumps, will not exceed pump station design capacity.

4. Pump station shall be capable of meeting the peak design flow condition with the largest pump out of service.

5. Pump stations shall be designed to comply with locality flood elevation construction requirements. The current locality requirements, available at the time of publication of this manual, that need to be verified for each project, are listed in Section 10 – Flood Elevation Requirements.

6. Provide a separate generator room or building with adequate space for maintenance and heat rejection from the engine block and exhaust system or isolate remaining areas from generator noise and heat.

7. Provide a slope on the pump room floor that will convey seepage from pump packing and drainage from wash down to a sump. Provide Zoeller Model 137D sump pump unless this standard model will not meet the flow or pressure condition and in this case, obtain approval for a deviation from HRSD's Project Manager.

8. Provide a toilet and sink in a separate room within the pump station. Provide a wash basin in the pump station.

9. Design shall incorporate measures to facilitate the maintenance and removal of equipment and pumps in both dry well and wet well areas.

10. Provide access to dry well and wet well by stairs.

    a. Spiral stairs and ship ladders are not acceptable.
    b. Stairs shall be a minimum width of 36 inches and shall include handrails on both sides.
    c. Stair riser heights and tread depths shall comply with the International Building Code (IBC), latest addition.

11. Design wet well and influent piping to minimize turbulence and air entrainment in the wet well.

12. Provide minimum submergence required to eliminate vortex at pump suction intake.

13. Evaluate the need for odor control and make provisions as necessary.

14. Locate discharges for sump pump, pump air release and restroom discharge away from pump intakes in the wet well and design to minimize turbulence and air entrainment.

15. Furnish and install a removable bar screen. Channel shall be designed to accommodate a grinder system and a bar screen interchangeably. The electrical system shall be designed with the necessary capacity for the grinder system.

16. Provide wet wells that slope toward the pump suctions and do not create areas

where solids can collect and build up.

17. Concrete in the wet well shall be protected from corrosion using polymer concrete, anti-microbial additive, surface applied coating system or a thermoplastic sheet liner.

    a. Thermoplastic sheet liner shall not be used on influent channels.

18. Provide smooth interior wet well surfaces. When installing thermoplastic sheet liner system, ensure that it is anchored into the new concrete and protect all interior concrete surfaces except the surfaces 1'-0" below the lowest water level in the wet well, i.e. the floor and lower walls. Use light-colored thermoplastic only, never black or other dark colors.

    a. The approved thermoplastic sheet linings for new pump station wet wells are:

        i. T-Lock Amerplate by Ameron International of Brea, California. (PVC Sheet Linings), or
        ii. GSE Studliner by GSE Lining Technology, Inc. of Houston, Texas. (High Density Polyethylene Liner), or
        iii. Anchor-Lok by Atlas Minerals and Chemicals, Inc. of Mertztown, Pennsylvania (High Density Polyethylene Liner).

    b. The anchored thermoplastic sheet linings shall be installed in strict accordance with the manufacturer's recommendations and shall be installed to ensure a pinhole free lining system. Particular care must be taken to ensure that lining terminations and transitions at changes in direction and at metal pipe penetrations, and leading edges are properly treated.

    c. Hot air welding on liners.

        i. PVC liners shall be performed by certified welders trained by the selected manufacturer in strict accordance with the manufacturer's instructions. Welding shall fuse both sheets and weld strips or filler material together to provide a continuous joint equal in corrosion resistance and impermeability to the basic liner sheets.
        ii. Joints on HDPE liners shall be filled using extrusion welding performed by personnel trained by the liner manufacturer.

    d. Quality Control Testing

        Once the thermoplastic sheet liners have been installed, the concrete forms removed, and all welding performed, the lining shall be inspected and tested by an independent testing firm as follows:

        i. The entire lining shall be carefully visually inspected for pinholes or damage.
        ii. All welds shall be probed with a blunt instrument like a putty knife to identify any weld defects.

iii. All surfaces of the sheet linings shall be tested with an approved (by the manufacturer) electrical holiday detector with the instrument set at the voltage range recommended by the manufacturer. This testing should only be performed by a certified technician trained by the manufacturer of the sheet lining or qualified previously to do so.

19. All below grade concrete structures shall have an exterior vapor barrier and /or waterproofing approved by HRSD.

20. Pump Station Substantial Completion Checklist – refer to Attachment A.

21. Physical Modeling shall be considered on all new or full replacement pump stations and a determination shall be documented in the PER regarding the decision to pursue physical modeling on an existing pump station rehabilitation project. The decision related to whether to do physical modeling shall be coordinated with the HRSD Project Manager.

D. Site Issues and Layout

1. Pumping station building and site shall be designed and configured to be in harmony with the surrounding setting. Architectural and landscaping designs and renderings will be submitted to and approved by HRSD at the PER stage. Refer to Section 2 – Architectural and Landscaping Design and Review Process in this standards manual.

2. Real-estate setbacks: Property shall accommodate existing and future HRSD development requirements, taking into consideration setbacks and zoning restrictions.

   a. Minimum property dimensions for a Pump Station is 150 feet x 150 feet.
   b. Minimum property dimensions for a Pressure Reducing Station is 200 feet x 200 feet.

3. Evaluate the need for the acquisition of additional property to accommodate future pump station replacement, off-line storage and/or other HRSD facilities.

4. Design must consider potential off-site impacts including noise, odors, excessive light, and other impacts to adjacent property owners.

5. Provide concrete entrance and a paved driveway for off-street parking, access to building and provision to turn around a crew truck. During design, use visualization tools to solicit feedback from stakeholders regarding proper access and turnaround space at site.

6. Include a site plan showing property lines, building, piping, existing & proposed utilities, valves, emergency pump connection, physical features, topography, etc. and any other requirements by the local approving authority.

7. Set a new benchmark at each new pump station or PRS and provide a data sheet

to include a site map, coordinates, elevations, descriptions at a minimum. Coordinate accuracy should be within 1/100 of a foot.

a. This applies to the following if a benchmark does not exist:
   i. Rehabilitation projects
   ii. Acquired assets (PS, PRS)

8. Refer to Section 34 – Miscellaneous in this standards manual for additional site layout information.

9. Provide a separate conditioned space to accommodate sensitive electrical equipment, such as the switchgear, motor control center, and variable frequency drives as applicable with site and space limitations.

10. Underground fuel storage tank replacement should be evaluated at existing stations when the tank age exceeds thirty years and major site work is being performed.

E. Masonry

1. Refer to Section 34 – Miscellaneous in this standards manual for additional information.

2. Building walls shall be concrete block with exterior brick veneer or as otherwise determined by HRSD's Architectural Review Committee and referenced in Section 2 – Architectural and Landscaping Design and Review Process.

3. All lintels shall be stainless steel.

F. Equipment

1. Pumps shall be centrifugal, non-clog, solids-handling pumps, capable of passing a 3-inch solid.

2. Pump manufacturer shall certify that the pump will meet the design requirements.

3. In typical installations, pumps shall be dry-pit submersible, close-coupled or extended shaft-driven pumps. Pumps will be evaluated and recommended for use by the FIRM.

   a. The FIRM shall carefully evaluate the size and dimensions of each manufacturer's product for compatibility with the space where the pump and accessories will be installed. This is especially important for rehabilitation projects where different pumps and motors are required within limited available space. Consideration must be given by the FIRM for maintenance access and removal of the pump and motor within existing spaces due to varying dimensions between manufacturers for similar products.
   b. 3D modeling of the station must be completed and shared with stakeholders during

the design phase to confirm maintenance access.

c. If the contractor suggests an "equal" substitution to major equipment during the bid or construction phase, the maintenance access must be reconfirmed through 3D modeling. Major equipment to be defined by Engineer in the bid documents.

4. Pump, motor, and impeller shall be balanced as a unit at the factory prior to shipment. Motor shall be inverter duty rated.

5. For submersible pumps, motor shall be equipped with two (2) moisture detection sensors, one in the mechanical seal oil bath and one in the lower portion of the armature area.

6. Accommodations shall be made to properly cool all electrical equipment and motors to effectively dissipate heat.

7. Pumps shall operate at speeds below 1,000 RPM unless otherwise approved by HRSD's Project Manager.

8. All pumps shall have a one-inch tap on the volute with a ball valve and flexible hosing so that the employee servicing the pump can monitor the air venting process while also safely directing any air or water away from the work area.

9. Spare parts to be provided by the contractor shall typically include the following. A requirement to furnish a spare volute and/or other major mechanical or electrical parts is project specific and should be discussed with HRSD.

   a. For each size pump, provide the following:

      i. One spare full-size impeller
      ii. One spare stainless-steel shaft and sleeve (shaft-driven only)
      iii. One spare set of wear rings
      iv. One spare set of mechanical seals
      v. One spare set of bearings

   b. For close-coupled pumps, provide the following (in addition to above):

      i. One spare coupling for each pump.

10. OSHA approved safety rails (load rated):

   a. All safety railings shall be load rated, meet OSHA Safety Railing Standards, and support a vertical and horizontal load of 200 pounds.

   b. Mounts for safety railings shall be designed and cast in place as part of the station.

   c. Handrails, guardrails, and/or safety chains shall be 42 inches in height with a 21-inch mid-rail/chain and 4-inch toe boards.

d. All stairs, safety railings and decking within the wet well shall be fiberglass reinforced plastic (FRP). All mounting brackets and exposed metal shall be stainless steel.

11. Pumps Performance Testing – pumps shall meet all specified requirements and have measured vibrations within the acceptable limits prescribed in the HI standards.

G. Conveying Systems

1. Provide a load rated monorail or bridge crane, trolley, and hoist with appropriate hatches and doors to directly access and remove the pumps and motors for maintenance. Use removable load rated grating to cover interior openings that are to be used for removal of equipment. Indicate the load ratings on the plans, stencil load ratings on the trolley, hoist, and rail system and provide three copies of certified load testing documentation. The monorail/trolley/hoist shall be load tested in accordance with OSHA requirements during construction by the contractor.

2. Consider the provision for electric trolley and/or hoist.

3. Provide direct access to monorail and hoist (or install separate lifting devices) for removal of sump/submersible pumps, as needed.

4. Provide rated lifting eyes to assist with equipment removal.

H. Mechanical

1. Interior Piping

a. Provide ductile iron flanged joint.

b. Provide a valve on the suction and discharge sides of each pump.

c. Provide a shut off valve or sluice gate on the gravity influent pipe. Preferred means of isolation is a 316 stainless steel, fabricated, heavy-duty sluice gate.

d. Gate valves shall be OS&Y or have a visual indicator, open left, and be coated with fusion-bonded epoxy.

i. Chain wheel actuators shall not be permitted.

e. All valves shall be easily and safely accessible for maintenance and operation. Provide OSHA approved fixed platform sufficient for a 2-person maintenance crew, as needed.

f. Provide a check valve on the discharge side of each pump between the discharge valve and the pump.

   i. Check valves shall not be installed in the vertical position.

   ii. Sizing Check Valve: To reduce O&M requirements, the valve shall preferably be sized to match the pump discharge nozzle size. Engineer shall confirm the selected check valve and size are in accordance with the check valve manufacturer's recommendations for use and flow ranges and evaluate impact on pump selection and performance.

g. Provide check valves with iron body, bronze seat check and bronze ring on disc. Check valves shall be provided with packing glands or o-rings and external lever and spring in accordance with AWWA C508.

h. Provide adequate pipe support and thrust restraint with base elbows, base pads or hangers as required. Metallic pipe supports and hardware shall be stainless steel.

i. Use eccentric reducers (match elevations at top of pipe) on the suction and discharge piping to prevent the entrapment of air.

j. Provide a manual air release on the discharge of each pump. Reduce from tap on pump volute to ½-inch pipe and ½-inch ball valve. Provide a union to transition to ¾ -inch HDPE air release piping to wet well. All pipe valves and fittings except HDPE shall be stainless steel.

k. Exterior wall penetrations shall be accomplished with a wall sleeve. Seal between sleeve and carrier pipe with a "Link Seal" type seal with stainless steel hardware. Bolts on the link seal shall be oriented so that they are tightened from inside the station. Penetrations between the pump room and wet well for pump suction piping shall utilize wall pipe with a cast integral seep ring.

l. Provide an eyewash station near the generator batteries in accordance with the current safety requirements.

m. Provide flexible connections on suction and discharge of pump to ensure motion and vibration is absorbed.

2. Exterior Piping (Force Main)

a. Refer to Section 24 – Pipelines and Appurtenances in this standards manual for additional requirements for force mains.

b. All pump stations shall have a mainline valve on both sides of the emergency pump connection.

c. Wet Well / Dry Well Pump Station - Provide an emergency pump connection with valves and blind flange(s). Also, provide an HDPE suction leg into the well. The connection or transition from HDPE to ductile shall be outside the wet well. Size pipe for emergency connection based on pump station design flow rate.

3. Provide for space heating to prevent freezing of pump station facilities, as appropriate.

4. Ventilation of the wet well shall meet SCAT regulations. Provide for 12 air changes per hour for continuous ventilation and 30 air changes per hour for intermittent ventilation. The ventilation system shall be designed to ventilate all areas of the wet well and prevent "short circuiting" of the air.

5. Provide potable water for the restroom and hose bibs from the municipal water system or from a well if municipal water system is not available. Signage shall be placed where well water is being used.

6. Provide a Virginia Department of Health (VDH) approved reduced pressure principal backflow preventer to be installed on the main potable water line where it enters the pump station and prior to any outlets in the pump station. Backflow preventer shall be tested and certified after installation.

7. Provide for the discharge of restroom drainage and the sump pump.

   a. Pressure Reducing Station - Discharge restroom drainage to the municipal sanitary sewer system, if available or pump discharge into the pump station suction leg utilizing a small package grinder pump. Grinder pump shall meet the maximum inlet head conditions.

   b. Wet Well / Dry Well Pump Station - Discharge restroom drainage to the pump station wet well.

I. <u>Electrical & Instrumentation</u>

1. Refer to Section 32 - Electrical and Instrumentation in this standards manual for additional information regarding electrical and instrumentation systems.

2. Provide a standby generator to meet Class I reliability. The generator shall be designed to meet the firm design capacity of the pump station with the primary power off.

3. Install electrical equipment and motors above the 100-year flood elevation or otherwise protect from the 100-year flood. Refer to Section 10 – Flood Elevation Requirements in this standards manual.

4. Require Contractor to install wiring for the intrusion alarm system from all required doors and their associated monitoring devices, back to the pump station control panel. The OIT on the control panel will display door entry

information. Alarm points to be determined by HRSD.

5. Provide variable frequency drive controllers to control pump speed.
   a. Pressure Reducing Station
      i. Pump shall be controlled in response to suction pressure.
      ii. Provide two pressure sensors (one 0 – XX.XX psi and one 0-XX.XX psi) on the suction piping and one pressure sensor (0-XX.XX psi), on the discharge piping. Transmitter span will be provided by HRSD for the location. All transmitters to be mounted on 4- inch Red Valve Annular Seal. Refer to Section 36 – Standard Details, Series 300 in this standards manual.

   b. Wet Well / Dry Well Pump Station
      i. Pump speed shall be controlled in response to wet well level.
      ii. On the pump discharge header, provide a 4" Red Valve Annular Seal and pressure sensor or approved equal. Provide a tee with a 4" branch and install a 4" gate valve on the branch prior to the pressure sensor and install a blind flange on the outside of the pressure sensor. Provide two ¾" pipe nipples with valves for flushing and calibration purposes.
      iii. Wet well levels to be monitored by means of level sensors or bubbler system. If a bubbler system is used, a differential pressure transmitter should be installed. A bypass manifold around the transmitter and maintenance ports on both the low and high side of the transmitter should be incorporated into the pressure assembly.

6. Consider the inclusion of contacts to operate the pumps across the line if the variable frequency drives fail. The alarm system will notify the operators of a variable frequency drive failure and the drives must be switched to the across the line contacts manually. The pumps can be started sequentially in the across the line mode of operation. Evaluate other means of providing variable frequency drive backup when motor horsepower exceeds 200 HP. In all cases, investigate the capacity of the local power grid to accommodate the across the line motor starting.

7. Include a flow meter and pressure sensor sized based on the design flow rate for the pump station. Location of the flow meter shall be downstream of the emergency pump connection. Flow meters must be installed per manufacturers specifications or as directed by HRSD in any case where the manufacturers specifications cannot be met. For all pressure sensors installed, an elevation measurement must be taken and provided to the Project Manager prior to start-up of the facility.

8. Provide a high-level float ball and a low-level float ball in the wet well and a float ball in the pump room.

9. Provide a single four-gang lockable 20-amp, 120-volt GFCI outlet outside the station near the wet well for a portable light or other use. The need for permanent lighting in the wet well should be discussed in the preliminary engineering phase.

10. Arc Flash Requirements - refer to Section 32 - Electrical and Instrumentation in this s t a n d a r d s manual for details.

11. Load Bank Testing Requirements - refer to Section 32 - Electrical and Instrumentation in this standards manual for details.

12. All new pump stations and PRS's shall include an electrical interface located at the pump station to integrate the Advanced Prime Guard Controller used on Xylem (Godwin) pumps with the existing HRSD SCADA system. Refer to the Temporary Pump Enclosure detail in Section 36 - Standard Details, Series 700 in this standards manual for guidance.

13. Temporary Portable Pump Alarms and Setup Standards – refer to Attachment B.

14. When developing a new or modifying an existing functional description, Engineer shall follow the format of an existing and similar functional description provided by the Project Manager. The draft functional description shall be provided to the HRSD team for review in tracked changes.

15. HRSD’s sole source vendor, Emerson, shall be used for the following on new or replacement stations:
    a. Furnish a new PLC control panel for installation by the General Contractor. General Contractor shall terminate wires at control cabinet and conduct loop checks.
    b. Configure the existing SCADA software to operate the station remotely.
    c. Configure the existing data historian, graphics, alarm screens, trend screens and reports on the SCADA system.
    d. Lead site acceptance test with support from the General Contractor. General Contractor shall be responsible for testing all systems and equipment to be controlled by the PLC control panel ahead of the final site acceptance test.
    e. Provide information regarding SCADA equipment that has been allocated to the project site.

16. HRSD’s preferred vendor shall conduct a Cellular Performance Survey of new property, provide instructions regarding the placement and type of cellular antenna (i.e. unidirectional or omnidirectional), and configure the wireless router and system switch. HRSD Project Manager to coordinate vendor activity through the Electrical and Instrumentation Division. General Contractor shall provide and install antenna and may be responsible for installing router and switch.

17. Engineer to provide details in the contract documents regarding SCADA Antenna Installation and Radio Communication System Grounding. Refer to Section 36 - Standard Details, Series 700 in this standards manual for guidance.

End of Section

ATTACHMENT A

PUMP STATION SUBSTANTIAL COMPLETION CHECKLIST*

*This list is provided as a general guideline and is not all inclusive.

GENERAL	
Item	**Description**
G1	Documentation
	Operation and Maintenance Manuals
	Record Drawings - Draft
	Service and Maintenance Agreements
	Manufacturers Certificate of Proper Installation
	Factory Test Reports
G2	Training
	Operator Training
	Specialty Training

CIVIL / STRUCTURAL	
Item	**Description**
C1	**Interior**
	Water intrusion / infiltration / leaks
	Wall penetration - Sealing
	Concrete finish work
	Caulking joints
	Steel work
	Coating
C2	**Exterior**
	Paneling / siding
	Landscaping
	Stormwater / drainage
	Paving
	Painting
	Coating
	Roof
	Concrete work

ELECTRICAL / INSTRUMENTATION	
Item	**Description**
E1	**Generator**
	Fuel system & Piping
	Fasteners
	Bolts and Nuts on Exhaust Guards
	Metal conduit fittings for feeders
	Conduit to Pull/Junction boxes
	Day tank system operation
	Exhaust insulation blanket

	Wall Thimble
	Alarms
E2	**Switchgear**
	Operation
	Programming
E3	Transformer
E4	Power Monitoring System
E5	Lighting and light switches
E6	Clear plastic covers on E-stop push buttons
E7	Outlets and Outlet covers
E8	Operator Interface Terminal (OIT)
	Operation and Function
	Programming
	Placement
E9	Supervisory Control and Data Acquisition (SCADA)
	Operation and Function
	Programming
	Placement

MECHANICAL	
Item	**Description**
M1	Pumps
	Operation
	Vibration
	Shaft Guards
	Paint
M2	Heating, Ventilation, & Air Conditioning (HVAC)
	Panels & Alarms
	Operation
	Condensate Line
	Ductwork
M3	Variable Frequency Drives (VFDs)
	Programming
	Operation
M4	Piping and Fittings
	Paint
	Joints
	Supports
M5	Valves
	Paint
	Placement
	Installation
	Operation
M6	Odor Control System
	Water line insulation/heat trace

	H2S monitor operation
	Level transducer.
	Programming
	Operation
	Fan & fan housing
M7	Salinity Meter
	Operation
	Placement
M8	Grinder
	Operation
	Placement
	Power Supply
	Connections
M9	Monorail Operation
M10	Labels for piping and ductwork
M11	Water heater
M12	Door locks
M13	Plumbing
M14	Spare Parts received
M15	Louvers

SAFETY	
Item	**Description**
S1	Confined Space signage for vaults, wet well, and other hatches
S2	Arc Flash Labels
S3	OSHA signs for batteries and NFPA labels for diesel fuel system
S4	Inspection tags
	Fire extinguisher
	Emergency Shower & Eye Wash station
	Hoist
	Cranes / Monorail
	Emergency Lighting
S5	Guardrail - to be used around floor opening when hatches are open
S6	Monorail load rating signage
S7	Deck grating secured
S8	Electrical grade matting in the front of high voltage electrical panels
S9	Emergency Shower & Eye Wash station
S10	Calibration of all meters
S11	Cleaning and debris removal

ATTACHMENT B

Temporary Portable Pump Alarms and Setup Standards

When a project requires a temporary portable pump to be alarmed, the following guidelines need to be followed.

- **When work is performed at station:** If power is available, all alarms are to be routed through existing HRSD's SCADA system. Portable pump manufacture call box is not acceptable unless otherwise approved for site specific situations. If power is not available then, HRSD solar SCADA panel will be provided. A portable generator may be required depending on site specific situations.
- **When work is performed at a manhole:** If power is available, all alarms are to be routed through existing HRSD's SCADA system. Portable pump manufacture call box is not acceptable unless otherwise approved for site specific situations. If power is not available then, HRSD solar SCADA panel will be provided. A portable generator may be required depending on site specific situations. Naming of the alarms from a manhole should indicate the location of the manhole (i.e. Pearl and Ligon)
- The name of the site is to be used followed by temporary lead, lag or second lag, depending on the number of pumps. (Example: Arctic Temporary Lead, Arctic Temporary Lag and Arctic Second Lag.)
- Both contractor and HRSD will be alerted in the event of a pump alarm. The contractor is responsible to be primary responder with the support of HRSD staff.
- All pump maintenance and fuel requirement are the contractors responsibility.
- Pump maintenance records are to be provided monthly through the duration of the project by contractor, depending on length of project.
- Battery chargers are required with all pumps. In situations where power is not available a portable generator may be required.
- All discharge piping is to be pressure rated flanged or fused pipe. Isolations valves are required at each pump along with an additional external swing check valve. A means to bleed air off the discharge piping is required.
- Float balls, level transducers and pressure transducers are acceptable. In a Lift station or manhole application, level transducers are preferred. If float balls are used for control, a two float setup is required per pump. All floats are to be secured in manhole or wet well so as not to become tangled, hindering pump operation. In a temporary PRS setup, owner furnished sensor valve will be provided to allow contractor to connect pressure transducers for control. An isolation valve is required to be furnished by contractor at this location.
- If work is to be performed during cold weather, the contractor is responsible for providing freeze protection on pumps and controls, specifically transducers.

- Depending on location and duration of job, concrete protective barrier wall may be required.
- All manholes and wet wells where temporary pumps are being used must be secured to prevent trip hazards, fall risks and odor issues.

The following standard alarms are required. Site specific alarms will be evaluated on a as need basis.

Two Pump Lift station Or Manhole (Diesel Pumps)

Lead Fail / Normal

Lag On / off

High well Alarm / Normal (HRSD furnished float ball if station alarms cannot be used)

Overflow Alarm / Normal (Determined necessary according to length of Job. HRSD furnished float ball if station alarms cannot be used.)

Three Pump Lift station Or Manhole (Diesel Pumps)

Lead Fail / Normal

Lag On / off

Second Lag On / Off

High well Alarm / Normal (HRSD furnished float ball if station alarms cannot be used)

Overflow Alarm / Normal (Determined necessary according to length of Job. HRSD furnished float ball if station alarms cannot be used.)

Two Pump Lift Station or Manhole (Diesel Pumps) New Prime Guard Controller

Lead Fail / Normal

Lag On / off and Fail / Normal

High well Alarm / Normal (HRSD furnished float ball if station alarms cannot be used)

Overflow Alarm / Normal (Determined necessary according to length of Job. HRSD furnished float ball if station alarms cannot be used.)

Two Pump Lift Station or Manhole (One electric one diesel pump) New Prime Guard Controller

Dominion Power On / OFF

Lead Fail / Normal (Electric)

Lag On / off and Fail / Normal

High well Alarm / Normal (HRSD furnished float ball if station alarms cannot be used)

Overflow Alarm / Normal (Determined necessary according to length of Job. HRSD furnished float ball if station alarms cannot be used.)

(For HRSD monitoring purposes only, provide well level.)

Three Pump Lift Station or Manhole (One electric two diesel pump) New Prime Guard Controller

Dominion Power On / OFF

Lead Fail / Normal (Electric)

Lag On / off and Fail / Normal

Second Lag On / off and Fail / Normal

High well Alarm / Normal (HRSD furnished float ball if station alarms cannot be used)

Overflow Alarm / Normal (Determined necessary according to length of Job. HRSD furnished float ball if station alarms cannot be used.)

(For HRSD monitoring purposes only, provide well level.)

Two Pump PRS (Diesel Pumps) New Prime Guard Controller

Lead Fail / Normal

Lag On / off and Fail / Normal

(For HRSD monitoring purposes only, provide Suction and Discharge pressures.)

Three Pump PRS (Diesel Pumps) New Prime Guard Controller

Lead Fail / Normal

Lag On / off and Fail / Normal

Second Lag On / off and Fail / Normal

(For HRSD monitoring purposes only, provide Suction and Discharge pressures.)

<u>Two Pump PRS (One electric one diesel pump) New Prime Guard Controller</u>

Dominion Power On / OFF

Lead Fail / Normal (Electric)

Lag On / off and Fail / Normal

(For HRSD monitoring purposes only, provide Suction and Discharge pressures.)

<u>Three Pump PRS (One electric two diesel pump) New Prime Guard Controller</u>

Dominion Power On / OFF

Lead Fail / Normal (Electric)

Lag On / off and Fail / Normal

Second Lag On / off and Fail / Normal

(For HRSD monitoring purposes only, provide Suction and Discharge pressures.)

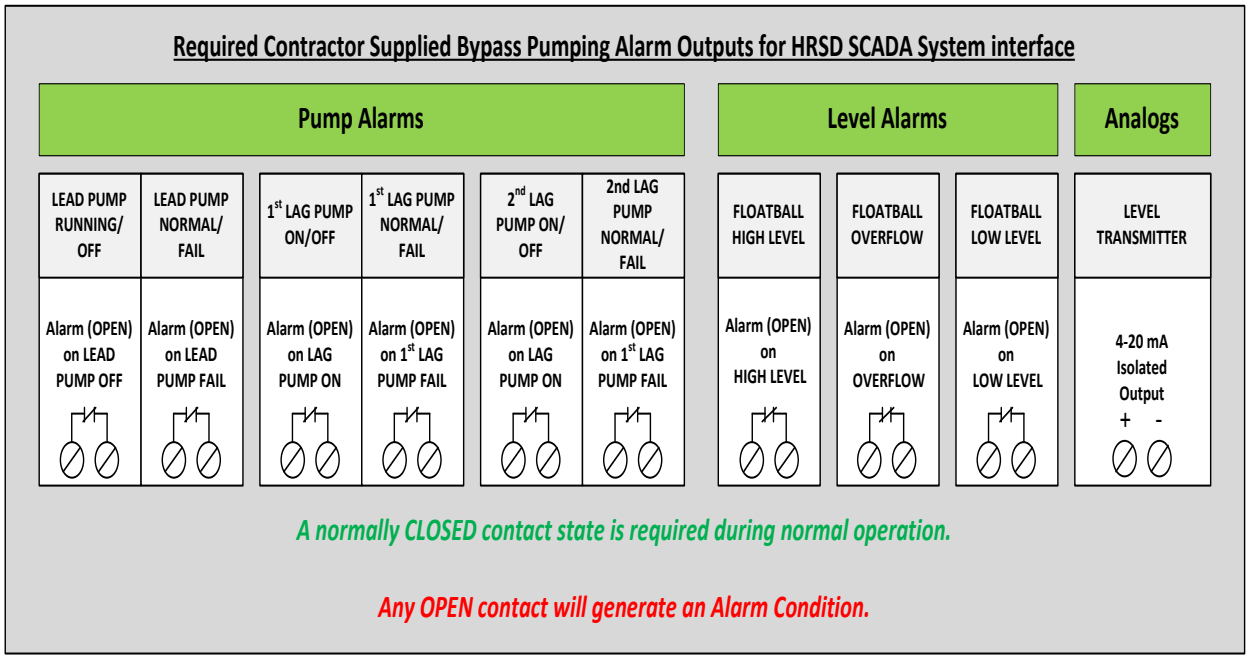

Section 31 - Treatment Plants

A. Purpose – HRSD has historically had a broad range of experience with many different types of treatment processes and equipment. This section documents best practices and criteria for the design and operation of HRSD treatment plants. This section is intended to be practical and prudent based on HRSD's history and experience. This section is to be followed wherever practical and used in conjunction with the other documents listed herein for standardization and consistency. This section is not meant to be a definitive design manual for treatment plant projects.. This section provides typical standards and/or guidelines for work associated with the construction, modification and/or rehabilitation of HRSD Treatment Plants and associated infrastructure. The information herein has been developed based previous experience which includes successes, failures and lessons learned.

1. HRSD owns and operates various wastewater treatment plants. These plants consist of various unit processes, which are divided into Sewage Treatment, SWIFT Advanced Water Treatment, and Solids Handling.

    a. Sewage Treatment: These processes typically consist of a preliminary process, a primary process, and a secondary process, which purify the liquid wastewater entering the treatment plant before it is discharged to the receiving stream, recycled for water reuse, or conveyed to SWIFT advanced treatment and aquifer recharge.
    b. SWIFT Advanced Water Treatment: SWIFT advanced water treatment facilities take highly treated water from HRSD's wastewater treatment plants and treats it further to meet drinking water quality standards. The SWIFT water is then used to recharge the Potomac Aquifer.
    c. Solids Handling: These processes typically consist of a thickening process, a dewatering process, and a solids disposal process, which dispose of or recycle the solid residuals produced from purifying the liquid wastewater.
    d. Side Stream Treatment: The processes which treat liquid recycles from the solids handling process to reduce nutrient or inhibitory compound loading at the head of the plant.

2. HRSD treatment plants are designed and operated to:

    a. Meet all regulatory requirements.
    b. Prevent offsite nuisance conditions.
    c. Be safe and reliable.
    d. Use proven equipment where applicable.
    e. Use automation and technology to minimize operating cost and maximize efficiency.
    f. Optimize life cycle cost.

3. Planning for new HRSD treatment plant facilities and projects is outlined in these documents:

    a. Solids Management Master Plan – Provides long-term planning to evaluate solids production, solids handling capabilities and deficiencies, and required new solids handling facilities for current and future conditions.

b. Capital Improvement Program (CIP) – Provides planning to initiate new projects.

4. Design and operating criteria for HRSD treatment plants are also outlined in the following documents:

   a. Interceptor System Policies – Provides design and operating criteria for HRSD interceptor systems and local collection systems.
   b. *HRSD Design and Construction Standards* – Provides design and construction standards for new projects.
   c. Commonwealth of Virginia Sewage Collection and Treatment (SCAT) Regulations – Provides design and operating criteria for sewerage systems and sewage treatment works in Virginia.
   d. Hydraulic Institute Standards – Provides industry standards for the design, material, methods, performance, testing, etc. for hydraulic pumps and associated elements.
   e. HRSD Standard Functional Descriptions.

5. The design and operation of HRSD treatment plants shall seek balance between design based on the way treatment plants are operated and operation based on the way treatment plants are designed.

6. Design of HRSD facilities should provide for occupancy, maintenance, and storage requirements such as conference rooms, restroom and locker room facilities, lunch room, storage area, maintenance work areas, office areas, etc.

7. Design for power failures and power failure restarts to ensure equipment fails and restarts in appropriate condition to protect personnel, facilities, and process.

B. Abbreviations - The following abbreviations shall be used on the construction documents for all treatment plant related projects.

Abbreviation	Definition
ANOX	Anoxic
ANAE	Anaerobic
AER	Aerobic
AAA	Anaerobic/Anoxic/Aerobic
AAE	Anaerobic/Anoxic Effluent
AI	Aeration Influent
ALUM	Alum Solution
ANE	Anaerobic Effluent
APD	Acid Phase Digester
APDS	Acid Phase Digester Solids
API	Acid Phase Influent
APRS	Acid Phase Recirculation Solids
ARCY	Anoxic Recycle
ARE	Aerated Effluent
AS	Air Supply (Low Pressure Process Air)

Abbreviation	Definition
ASR	Aerated Supernatant Return
AXE	Anoxic Effluent
BAF EFF	Biofilter Effluent
BAF INF	Biofilter Influent
BAS	Backwash Air Supply
BLWR	Blower
BWS	Backwash Water Supply
BWW	Backwash Waste
BWWR	Backwash Waste Recycle
CCK	Centrifuge Biosolids Cake
CCT	Centrifuge Dewatering Centrate/ Chlorine Contact Tank
CCWS	Closed Loop Cooling Water Supply
CCWR	Closed Loop Cooling Water Return
CENT	Centrifuge
CNE	Centrate Equalization
CLS	Chlorine Solution
CSP	Cake Storage Pad
CST	Caustic Storage Tank
CTC	Centrifuge Thickening Centrate
CTI	Centrate Treatment Influent
CTP	Centrate Treatment Process
CTS	Centrifuge Thickened Biosolids
CTE	Centrate Treatment System Effluent
DA	Polymer Dry Air
DAF	Dissolved Air Flotation Thickener
DGAS	Digester Gas
DIG	Digester
DIST CH	Distribution Chamber
DPOLY	Dry Polymer
DPSD	Drain Pump Station Discharge
DS	Digested Solids
DSR	Decant Supernatant Return
DTD	Decant Tank Drain
FD	Floor Drain
FE	Filtrate Effluent
FERRIC	Ferric Chloride/Sulfate
FI	Filtrate Influent
Filter Aid Poly	Filter Aid Polymer
FLOC INF	Flocculation Influent
FNE	Final Effluent
FOG	Fats, Oils, and Grease
FOP	Fuel Oil Pump
FOS	Fuel Oil Supply
FOR	Fuel Oil Return

Abbreviation	Definition
FSB	Dissolved Air Flotation Thickener Subnatant
FTS	Dissolved Air Flotation Thickener Solids
FTW	Filter to Waste
GAC	Granular Activated Carbon
GAC EFF	GAC Effluent
GAC INF	GAC Influent
GAC SD	GAC Slurry Drain
GAC SF	GAC Slurry Fill
GBFL	Gravity Belt Filtrate
GBT	Gravity Belt Thickener
GBTS	Gravity Belt Thickened Solids
GBWS	GAC Backwash Supply
GBWW	GAC Backwash Waste
GOX	Gaseous Oxygen
GPD	Gas Phase Digester
GPDS	Gas Phase Digested Solids
GPE	Gas Phase Effluent
GPI	Gas Phase Influent
GPRS	Gas Phase Recirculation Solids
GRIT	Grit
GSP	Gravity Thickener Overflow/Supernatant
GTS	Gravity Thickened Solids
GTW	GAC to Waste
H2O2	Hydrogen Peroxide
HDOIL	Hydraulic Oil
HW	Headworks
HWP	Hot Water Pump
HPW	Hot Potable Water
HWR	Hot Water Return
HWS	Hot Water Supply
IPS	Intermediate Pump Station
ISW	Incinerator Scrubber Water
LAS	Liquid Ammonium Sulfate
LOX	Liquid Oxygen
LPROP	Liquid Propane
LPOLY	Liquid Polymer
METH	Methanol
MLSS	Mixed Liquor Suspended Solids
MURIATIC	Muriatic Acid
MWS	Monitoring Well Sample
NAT GAS	Natural Gas
NH2CL	Monochloramine
NPW	Non-Potable Water
NRCY	Nitrified Recycle
O3SAMP	Ozonated Water Sample

Abbreviation	Definition
OA	Odorous Air
OCF	Odor Control Fan
OCS	Odor Control Scrubber
OCWR	Open Loop Cooling Water Supply
OCWS	Open Loop Cooling Water Return
OD	Ozone Destruct
OFF SPEC	SWIFT Off Spec
OZONE	Ozone Gas
PCE	Primary Clarifier Effluent
PCI	Primary Clarifier Influent
PCS	Primary Clarifier Solids
PD	Process Drain
PDS	Primary Digested Solids
PDSP	Primary Digester Supernatant
PHOS A	Phosphoric Acid
POLYS	Polymer Solution
PTF	Preliminary Treatment Facility
PW	Potable Water
RAS	Return Activated Solids
RCP	Recirculation Pump
RD	Roof Drain
REAER	Reaeration
RWI	Raw Wastewater Influent
SA	Service Air
SAMP	Sample
SBD	Scrubber Blowdown
SBR	Sequencing Batch Reactor
SC	Secondary Clarifier
SCB	Scum Concentrator Subnatant
SCE	Secondary Clarifier Effluent
SCI	Secondary Clarifier Influent
ST	Sidestream Treatment
SCN	Supplemental Carbon Neat/Screen
SCS	Supplemental Carbon Solution
SCUM	Scum
SD	Storm Drain
SDS	Secondary Digested Biosolids
SDSP	Secondary Digester Supernatant
SEPT	Septage
SES	Settled Solids
BISULF	Sodium Bisulfite
CAUSTIC	Sodium Hydroxide
HYPO	Sodium Hypochlorite
SFW	Softened Water
SP	Sump Pump

Abbreviation	Definition
SPD	Sump Pump Discharge
SPRAY	Spray Water
SR	Supernatant Return
SRC	Scrubber Recirculation Cleaning
SRD	Scrubber Recirculation Discharge
SRS	Scrubber recirculation Suction
SS	Sanitary Sewer
SSFM	Sanitary Sewer Force Main
STEAM	Steam
STW	Settled Water
SW	Seal Water
SWIFT	SWIFT Water ™
SWIFT NPW	SWIFT Non Potable Water
TS	Thickened Solids
TSR	Thickener Supernatant Return
TWAS	Thickened Waste Activated Solids
UF EFF	UV Effluent
UW	Utility Water
V	Vent
WAS	Waste Activated Solids
WBF	Well Backflush

C. Sewage Treatment Design and Operation:

1. Regulations – The design and operation of sewage treatment facilities should be in accordance with all provisions of the approved SCAT Regulations.

2. Design Life – The design life of sewage treatment facilities should be greater than or equal to the following:

   a. Structures: 50 years
   b. Piping and Conveyance: 50 years
   c. Mechanical Equipment: 20 years
   d. Electrical Power Equipment: 20 years
   e. Instrumentation And Control Equipment: 5 to 10 years

3. Flood Elevations – The flood elevations for sewage treatment unit processes should be based on the historical flood elevations listed below except on a case by case basis to meet existing or unusual conditions or where the discharge is to sensitive receiving waters:

   a. 25 Year Flood Elevation to remain fully operational.
   b. 100 Year Flood Elevation to protect structures housing critical operating equipment from flooding.

4. Operating Elevation, Design Flow – Consult with the Hydraulic Analysis Review Team (HART) report to determine design criteria if applicable or obtain hydraulic data from HRSD Hydraulic Analysis Managers.

5. Nutrient Removal

    a. Provide consistent tank nomenclature at Biological Nutrient Removal (BNR) plants. Engineering documents and drawings should use this nomenclature.

        i. "1st Anoxic Zone" is correct. Do not use "Pre-anoxic zone".
        ii. "2nd Anoxic Zone" is correct. Do not use "Post-anoxic zone".
        iii. Number multiple cells within an Anoxic or Aerobic zone according to the flow direction in the tank; for example: 2nd Anoxic Zone, Cell 1; 2nd Anoxic Zone, Cell 2; 2nd Anoxic Zone, Cell 3.
        iv. For step feed process, use "1st Anoxic Zone", "2nd Anoxic Zone", "3rd Anoxic Zone", etc and "1st Aerobic", "2nd Aerobic", "3rd Aerobic", etc.
        v. For Bardenpho processes, use "Aerobic Zone" and "Reaeration Zone".

6. Design Loadings – The design loadings for sewage treatment unit processes should be based on the maximum monthly wastewater flow and the maximum month mass loading for CBOD, COD, TSS, TP, and TN. The maximum month loading and projected growth should be based on historical records, field sampling or similar experience. Include the impacts of septage discharge, chemical addition and recycle loads on the maximum monthly concentrations. Base recycle loads on historical records. If accurate data is not available, consider a minimum of a 10% recycle of CBOD, TSS, P and N as appropriate from solids handling. Peak loadings (such as peak weekly loadings or peak hourly loadings where typically used for process design) should be as recommended by the design engineer. Identify all flows, concentrations and loadings used for the design of unit processes in the design documents.

    Water conservation has caused a general decrease in flow and corresponding increase in concentrations of CBOD, TSS, P and N. This trend may significantly change the original design loadings at some treatment plants where sewage treatment and/or solids handling unit processes become limited by CBOD and TSS loadings before the design flow is reached unless additional aeration and/or solids handling capacity is available. Sewage treatment and solids handling unit processes should be designed to accommodate this trend by using higher influent concentrations as appropriate so as to fully utilize the design flow of the treatment plants. Low Impact Development and water conservation efforts such as low flush toilets, flushless urinals, and grey-water reuse will further increase CBOD, TSS, TP, and TN concentrations. Sewage treatment and solids handling unit processes should be designed to accommodate this trend by using higher influent concentrations. Recommended values for new residential neighborhoods are: BOD = 299 mg/l, TSS = 261 mg/l, TKN = 50.3 mg/l, and TP = 6.23 mg/l ("HRSD Domestic Wastewater Survey" Memorandum, December 8, 2014).

7. Design For Initial Plant Startup – The design for initial plant startup should provide for efficient and economical operation of sewage treatment unit processes without problems

caused by oversized tanks and equipment if low flows are expected during early years of operation. The design for initial plant startup may incorporate:

a. Sufficient turndown capability
b. Additional smaller initial equipment to be operated only at lower flows.
c. Multiple smaller initial equipment to be operated together at higher flows.

8. Outfalls And Outfall Diffusers – Consult with the Hydraulic Analysis Review Team (HART) report to determine design criteria if applicable or obtain hydraulic data from HRSD Hydraulic Analysis Managers.

9. Reliability And Redundancy – The reliability and redundancy of major sewage treatment equipment should be the ability to take any one unit process train out of service at design flow as long as all unit process trains of all other unit processes remain in service. Verify that the design complies with SCAT Regulations.

10. Equipment Selection – The current, approved list of sole-source equipment can be found on Sharepoint site under Finance / Sole Source/ COMMISSION APPROVED SOLE SOURCE ITEMS . Users without Sharepoint access may request this document by contacting the Engineering Department.

11. Minimum Requirements:

Sewage Treatment Unit Process	Min. No. of Units Installed	No. of Units Out of Service	Comments
Flow Measurement	1	0	Provide flow measurement with totalizer. FNE is preferred over RWI. Internal recycle streams are to be separate (after RWI measurement or prior to FNE measurement). Consider parshall flume, venturi, or magmeter. Employ only flow meter equipment that is accurate and non-ragging/self-cleaning.

Sewage Treatment Unit Process	Min. No. of Units Installed	No. of Units Out of Service	Comments
Influent Pumping			
Pumps	Minimum 3 units (includes one spare) Firm capacity to be determined by HRSD Planning & Analysis of 2.5 times design flow Meet firm capacity with largest unit out of service	1	Provide for all pumps to be variable speed. The 1st pump runs continuously, the 2nd pump starts when 1st pump cannot handle all of the flow. Additional pumps run when 1st and 2nd pumps cannot handle flow or upon failure of 1st or 2nd pump.
Wet Wells/ Channels	As required	As required	Consider self-cleaning wet wells. Match size and controls to pumping requirements to prevent frequent start/stop of pumps. Consider means to remove wet wells and enclosed channels from service in the future for maintenance of concrete and coatings. Provide for personnel access into wet well. Provide protective lining or coating at linear trench style self-cleaning wet wells for RWI service.
Automatic Actuators	-	-	Provide automatic actuators on all critical control gates and valves. Consider remote DCS control and provide at a minimum position indication.

Sewage Treatment Unit Process	Min. No. of Units Installed	No. of Units Out of Service	Comments

Isolation Gates	-	-	Provide secondary means of closure at all gates. Stop logs or Stop Gates may be considered provided they:
			• meet the same AWWA leakage rates specified for slide gates
			• are engineered and composed of:
			  o FRP encapsulated A36 steel or 304 SST for the stop log / stop gate panel
			  o neoprene rubber for the seals
			  o SST for the slide frame and hardware with replaceable UHMW guide strips and neoprene guide seals.
			• have logs that are a minimum of 3-1/2" thick with opposing bottom-mounted dual "J" seals
			• have surface mounted slide channel frame guides permanently installed in channel walls with a flat bottom sealing surface (no sealing keyway/grove) for the stop logs to seal against,
			• have a mechanical galvanized lifting beam assembly to place and retrieve the stop log or stop gates
			• are mounted in areas accessible to a portable gantry for use with the lifting beam assembly. If not, a permanent gantry or jib must be installed and positioned to accommodate log/gate installation and extraction.

Sewage Treatment Unit Process	Min. No. of Units Installed	No. of Units Out of Service	Comments
Bar Screens	2 minimum; Sized for 2.5 x annual average wastewater flow rate with largest unit out of service	1	Size to protect plant during severe storm flow conditions. Provide coarse screen bypass channel. Screenings are to be sluiced to a compactor. Dewater screenings using press or similar equipment. Discharge screenings into bulk storage containers. Minimum two containers, each sized for one screen. Manifold discharge screenings to multiple containers. Locate containers inside enclosed building with odor control.
Center Flow Band Screens and Drum Screens	2 minimum; Sized for 2.5 x annual average wastewater flow rate with largest unit out of service	1	Size to protect plant during severe flow conditions. Band screens are to have internal bypass overflows (bypass channel not required). Screenings are to be sluiced to a compactor. Discharge screenings into bulk storage containers. Minimum two containers, each sized for one screen. Manifold discharge screenings to multiple containers. Locate containers inside enclosed building with odor control.
Step Screens	2 minimum; Sized for 2.5 x annual average wastewater flow rate with largest unit out of service	1	Size to protect plant during severe flow conditions. Provide coarse screen bypass channel for emergency use. Screenings are to be sluiced to a compactor. Discharge screenings into bulk storage containers. Minimum two containers, each sized for one screen. Manifold discharge screenings to multiple containers. Locate containers inside enclosed building with odor control.

Sewage Treatment Unit Process	Min. No. of Units Installed	No. of Units Out of Service	Comments
Grit Removal			
Tanks	2 minimum; Sized for 2.5 x annual average wastewater flow with largest unit out of service	1	Size to protect plant during severe storm flow conditions. Consider only detritors, stacked vortex (Head Cell), or structured vortex (Grit King). Avoid aerated grit, forced vortex, and velocity channels (grit channels). Consider collection system diurnal velocities for deposition of grit and storm slug loads.
Grit Pumps	2 per tank	1	Size each unit to handle total tank loading. Do not provide interconnection between tanks. Minimum grit pipe diameter is 6-inch. Minimum grit pump suction / discharge size is 4-inch / 4-inch. Provide flushing water on suction side of pumps.
Classifiers	2 per tank	1	Size each unit to handle total tank loading.
Hopper	1	0	Discharge all classifiers into 1 hopper. Locate hopper inside enclosed building with odor control.

Sewage Treatment Unit Process	Min. No. of Units Installed	No. of Units Out of Service	Comments
Pre-Aeration	-	-	Do not use.
Primary Clarifiers			
Tanks	3 sized for design loadings	1	Prefer center feed, circular units if space available due to less maintenance and better thickening. Consider separate fermenter for BNR if circular units used. For circular tanks, evaluate stainless steel rake and scum systems, FRP weirs/wells, SS center pier.
Solids Pumps	1 dedicated pump per clarifier with 1 spare pump per 2 or 3 clarifiers	1	Provide turndown capability or smaller pumps for low flow requirements at initial plant startup with provisions to replace smaller pumps as plant expands. Provide grinder or solids screen with bypass line ahead of each pump. Pumps with internal cutting blades can be considered if grinder installation is not practical due to space limitations.
Intermediate Pumping			Refer to Pump subheading in Influent Pumping.

Sewage Treatment Unit Process	Min. No. of Units Installed	No. of Units Out of Service	Comments
Aeration			
Tanks	3 minimum; accommodate 2.5 times design flow with one tank out of service	1	Provide foam re-entrainment and/or foam removal.
Blowers	3 sized for design loadings with largest unit out of service	1	Provide turndown capability or 2 smaller blowers approximating 1 larger blower for low air requirements at initial plant startup with provisions to replace smaller blowers or install additional blowers as plant expands. Provide automatic start/stop and air control. Refer to HRSD Standard Functional Descriptions for control regimes. Locate blowers near aeration tanks to minimize air piping.
Air Piping	-	-	Locate air piping above ground or in tunnels; do not bury.
Air Diffusers	-	-	Fine bubble diffused air system.

Sewage Treatment Unit Process	Min. No. of Units Installed	No. of Units Out of Service	Comments
Secondary Clarifiers			
Tanks	3 minimum; accommodate 2.5 times design flow with one tank out of service	1	
RAS Pumps	1 dedicated pump per clarifier with provision for adequate number of spare pumps	1	Provide variable speed pumps sized for total dedicated pump capacity of 1.0 x maximum monthly wastewater flow.
WAS Pumps	2 typically pulling off RAS discharge	1	Provide turndown capability or smaller pumps for low flow requirements at initial plant startup with provisions to replace smaller pumps as plant expands.
Chlorine Contact Tanks	2 sized for design flows	1	Provide 30 minutes detention time at maximum monthly wastewater flow (corresponding to SCAT terminology of average daily wastewater flow) or 20 minutes at 2.0 x maximum monthly wastewater flow (corresponding to SCAT terminology of maximum daily wastewater flow) whichever is greater with largest unit out of service. Provide scum removal system.

Sewage Treatment Unit Process	Min. No. of Units Installed	No. of Units Out of Service	Comments
Effluent Pumping			
Pumps	3 sized for 2.5 x design waste-water flow with largest unit out of service	1	Provide variable speed pumps. Controls shall conform to HRSD Standard Functional Description.
Wet Well	-	-	Match size and controls to pumping requirements to prevent frequent start/stop of pumps. Locate close to chlorine contact tanks. Provide scum removal system.
Non-Potable Pumps and Automatic Strainers	3	1	May need additional pumps for multiple purposes, wide flow range, or low flow requirements at initial plant startup. Locate suction before dechlorination. Refer to HRSD Standard Functional Descriptions for control. Ensure complete by-pass capabilities for strainer maintenance.

Sewage Treatment Unit Process	Min. No. of Units Installed	No. of Units Out of Service	Comments
Scum Removal			
Wells and Holding Tanks	-	-	Provide for agitation to break up crusted scum and automatic pump out of scum without excessive water. Consider morning glory / tee valve to minimize water content of pumped scum.
Scum Transfer Pumps	2 per well or holding tank	1	Provide grinder ahead of each pump. Do not use air operated diaphragm pumps.
Scum Piping	-	-	Minimum 4-inch diameter. Corrosion-resistant glass lined ductile iron, HDPE, or PVC. Long radius bends, cleanouts, NPW flushing connections.
Concentrator	2	1	
Concentrated Scum Pumps	2 per concentrator	1	Do not use air operated diaphragm pumps.
Concentrated Scum Piping	-	-	Maximum 4-inch diameter. Corrosion-resistant glass lined ductile iron, PVC, or HDPE. Long radius bends, cleanouts, NPW flushing connections, and air connection at injection point to furnace.
Chemical Feed Systems			
Pumps	1 dedicated pump per feed point with 1 spare pump connected to manifold	-	Provide turndown capability or range of pump sizes to accommodate low flow and high flow requirements. Flow meters to read accurately at all anticipated flow ranges.

Sewage Treatment Unit Process	Min. No. of Units Installed	No. of Units Out of Service	Comments
Odor Control			
Enclosed Facilities and Covered Tanks	-	-	Consider on case by case basis.
Scrubbers	2 trains of 2 scrubbers each including standby train for sewage treatment	1 train	Consider 1 large odor control station versus multiple smaller odor control stations on case by case basis. Provide additional trains for large air flows. Consider bioscrubbers and carbon scrubbers where applicable.
	2 scrubbers including standby scrubber for solids handling where single stage scrubbing is appropriate or as above for sewage treatment where two stage scrubbing is required	1 scrubber	Provide for chemical cleaning of scrubbers.

Sewage Treatment Unit Process	Min. No. of Units Installed	No. of Units Out of Service	Comments
Emergency Power Generators	1 sized on case by case basis to power all sewage treatment operations at 2.5 x maximum monthly wastewater flow plus critical solids handling operations on a case by case basis	0	Satisfy Class I Reliability requirements. Provide emergency generator(s) rated to adequately power required plant loads. Provide sufficient fuel storage for a 7 consecutive day utility outage at full load.
UPS	-	-	Provide backup power for sufficient time at control stations for critical computer, data collection and I&C functions.

D. SWIFT Facilities Design and Operation:

1. Regulations – the design and operation of SWIFT facilities for aquifer recharge is regulated through the EPA's Underground Injection Control program. The Potomac Aquifer Recharge Oversight Committee is an advisory board that provides independent monitoring and oversight of the SWIFT program. The Committee consists of a 10-member advisory panel including representatives from VDH, VA DEQ, the HRPDC, and the public.

2. Design life – Design life for SWIFT facilities shall match the design life for sewage treatment facilities detailed in Section 31.C.2

   a. SWIFT treatment capacity – SWIFT treatment and aquifer recharge facility capacities are determined based on achieving SWIFT capture rate and SWIFT facilities utilization targets.

   b. The SWIFT capture rate describes the percentage of wastewater effluent that is treated by SWIFT AWT process. It is defined as the influent flow to the SWIFT AWT facility(s) divided by the effluent flow (typically either secondary clarifier effluent or tertiary treatment effluent) from the wastewater treatment facility(s).

3. The SWIFT facilities utilization compares actual SWIFT AWT aquifer recharge production compared with the available SWIFT AWT and aquifer recharge production capacity. It is defined as the influent flow to SWIFT AWT facility(s) divided by the SWIFT AWT facility(s) design treatment capacity.

4. SWIFT integration – Integration of SWIFT facilities shall consider impacts to plant NPW water systems, impacts to wastewater disinfection processes and associated permit requirements, nutrient removal processes, treatment plant solids handling and disposal practices, outfall infrastructure operations and maintenance and the interface with electrical and instrumentation systems.

5. Design loadings – Design parameters and loadings shall be in accordance with the stipulations in the EPA UIC permit.

6. Equipment selection – The current approved list of sole-source equipment can be found on Sharepoint site under Finance/Sole Source/COMMISSION APPROVED SOLE SOURCE ITEMS. Users without Sharepoint access may request this document by contacting the Engineering Department.

7. Minimum Requirements

SWIFT Unit Process	Min. No. of Units Installed	No. Units Out of Service	Comments
Rapid Mix	2	1	
Flocculation	2 sized for design residence time w/ one unit out of service	1	
Sedimentation	2 sized for design overflow rate w/ one unit out of service	1	If inclined pates are used, plate efficiency shall be 80% and plate angle shall not be less than 55°.
Ozone Generation	2	1	Selection of ozone generators shall consider maintaining economical use of power and oxygen over the expected range of operating conditions.
Ozone Contact	1 (if pipeline or serpentine contactor used) 2 (if over-under contactor used)	0 (if pipeline or serpentine contactor used) 1 (if over-under contactor used)	
Biofiltration	2 sized for design empty bed contact	1	Evaluation for number of biofilters should optimize the

	time w/ one unit out of service		number of filters based on individual filter size, overall facility footprint, backwash flow (pumps, piping, backwash supply and waste volume requirements, and number of filters.
GAC Adsorption	2 sized for design empty bed contact time w/ one unit out of service (1 unit in backwash)	1	Evaluation for number of GAC contactors should optimize the number of contactors based on individual unit size, overall facility footprint, backwash flow (pumps, piping, backwash supply and waste volume requirements, and number of units. Evaluation shall consider impacts of GAC replacement activities on SWIFT AWT throughput.
UV Disinfection	2	1	
SWIFT Water Pumping	2	1	
SWIFT Recharge Wells	N/A	2 (1 well in backflush and 1 well under rehabilitation)	

E. Solids Handling Design and Operation:

1. The planning and selection of solids handling facilities, unit processes and final solids use or disposal should be in accordance with the Solids Management Plan on HRSD SharePoint site. The evaluation of new solids handling facilities should consider alternative and multiple methods and backup plans to provide for flexibility and contingencies in case of process failure or new regulatory requirements. The design and operation of solids handling facilities should be in accordance with all provisions of the approved SCAT Regulations. Solids handling design and operation should also comply with the requirements of the 40 CFR Part 503, MACT 129, and Title V regulations.

2. Design Life – The design life for various elements of solids handling facilities should be greater than or equal to the following:

    a. Structures: 50 years
    b. Piping and Conveyance: 50 years

c. Mechanical Equipment: 20 years
d. Electrical Power Equipment: 20 years
e. Instrumentation and Control Equipment: 5 to 10 years

3. Solids Capacity – The solids capacity for solids handling unit processes should be based on the following criteria:

   a. Plant Solids Capacity – The plant solids capacity of the overall solids handling facilities should be based on solids production at maximum monthly flow and load.
   b. Process Solids Capacity – The process solids capacity for individual solids handling unit processes including recycle loadings and peak loadings (such as peak weekly loadings or peak hourly loadings) should be as recommended by the design enigneer.
   c. Limiting Solids Capacity – The limiting solids capacity of the overall solids handling facilities should be based on the individual solids handling unit process having the lowest monthly solids capacity (i.e. the bottleneck).

   Note: Observations on loadings and capacity of solids handling unit processes based on HRSD analysis and experience are as follows:
   - Peak daily loadings are buffered (absorbed) by peak weekly loadings.
   - Incinerator capacity is related as follows:

Peak Daily Capacity	= Equipment Rated Max. Capacity
Peak Weekly Capacity	~ Peak Daily Capacity due to buffering capacity = Equipment Rated Max. Capacity
Max. Monthly Capacity	= 85% x Peak Weekly Capacity = 85% x Equipment Rated Max. Capacity
Avg. Monthly Capacity	= 85% x Max. Monthly Capacity = 85% x 85% x Peak Weekly Capacity = 72% x Peak Weekly Capacity = 72% x Equipment Rated Max. Capacity

4. Design Loadings – The design loadings for solids handling unit processes are to be as recommended by the design engineer. The design loadings should be based on historical records, field sampling, or similar experience. The design loadings should include the impacts of septage discharge, chemical addition, and solids from other plants.

5. Design For Initial Plant Startup – The design for initial plant startup should provide for efficient and economical operation of sewage treatment unit processes without problems caused by oversized tanks and equipment if low flows are expected during early years of operation. The design for initial plant startup may incorporate:

   a. Sufficient turndown capability
   b. Additional smaller initial equipment to be operated only at lower flows.

c. Multiple smaller initial equipment to be operated together at higher flows.

6. Intermittent Operation – The intermittent operation of solids handling unit processes should be evaluated carefully to determine the impacts on other sewage treatment and solids handling unit processes and operations at both initial plant startup and design loadings. A plan for intermittent operations, if applicable, should be developed by HRSD and forwarded to the design enigneer early in the design process.

7. Impact On Sewage Treatment – The impact of solids handling unit processes on other sewage treatment unit processes and operations should be evaluated carefully at both initial plant startup and design loadings. Such impacts from solids handling may be detrimental to performance of sewage treatment unit processes or operating efficiency of facilities. The evaluation should consider factors such as:

   a. Initial and design loadings
   b. Size of equipment and turndown capability
   c. Intermittent operation and hours of operation
   d. Recycle load impact on unit processes
   e. Interdependent onsite and offsite unit processes and operations

8. Reliability And Redundancy – The reliability and redundancy of solids handling unit processes should be based on operating with the largest unit out of service. The reliability and redundancy of major solids handling equipment should be based on having a spare unit of the largest size. Verify that the design complies with the SCAT Regulations.

9. Equipment Selection – The current, approved list of sole-source equipment can be found on Sharepoint site under Finance / Sole Source/ COMMISSION APPROVED SOLE SOURCE ITEMS . Users without Sharepoint access may request this document by contacting the Engineering Department.

10. Minimum Requirements:

Solids Handling Unit Process	Min. No. of Units Installed	No. of Units Out of Service	Comments
Holding Tanks			Need to evaluate mixing requirements. Consider Confined Space Entry Permit requirements when designing access for cleaning and inspection. Provide odor scrubbing of the Holding Tanks
Storage	1 minimum, 2 preferred	1	
Day	1 minimum, 2 preferred	1	
Blend	1 minimum, 2 preferred	1	

Solids Handling Unit Process	Min. No. of Units Installed	No. of Units Out of Service	Comments
Thickeners			
Gravity	2 sized for design loadings	1	
Flotation	2 sized for design loadings w/ largest unit out of service	1	
Gravity Belt	2 sized for design loadings w/ largest unit out of service	1	
Thickened Solids Pumps	1 dedicated pump per unit with one spare pump where applicable	1	Provide VFD/pump system turndown capability or smaller pumps for low flow requirements at initial plant startup with provisions to replace smaller pumps as plant expands.
Hopper	1	0	Provide useable hopper volume to match operational and process requirements. Provide hopper level monitoring to control the Thickened Solids Pumps.
Anaerobic Digesters			
Primary	2 sized for design loadings w/ largest unit out of service to meet Class B requirements	1	Requires 6 months to clean and repair digester. Both primary and secondary digesters shall be dual-purpose.
Secondary	1 sized for design loadings	1	Consider alternate gas storage on a case by case basis. Both primary and secondary digesters shall be dual-purpose.

Solids Handling Unit Process	Min. No. of Units Installed	No. of Units Out of Service	Comments
2 Stage			
Acid Phase	2 sized for design loadings w/ one unit out of service	1	Avoid P-traps on drawoffs due to gas/liquid binding.
Gas Phase	2 sized for design loadings w/ one unit out of service	1	
Pumps	1 dedicated pump per unit with one spare pump per every two units	1	Provide turndown capability or smaller pumps for low flow requirements at initial plant startup with provisions to replace smaller pumps as plant expands.
Heat Exchangers	2	1	Shell and tube.
Foam Control	-	-	Consider foam control measures
Dewatering			
Belt Filter Press	2 sized for design loadings w/ one unit out of service	1	
Centrifuge	2 sized for design loadings w/ one unit out of service	1	Provide 1 spare uninstalled rotating assembly or 1 additional installed centrifuge. Requires 6 months for outside repair of centrifuge.
Pumps	1 pump per unit	1	Provide turndown capability or smaller pumps for low flow requirements at initial plant startup with provisions to replace smaller pumps as plant expands. Provide grinder ahead of each pump.

Solids Handling Unit Process	Min. No. of Units Installed	No. of Units Out of Service	Comments
Hopper	2	1	Design system to be flexible for discharge into any / all hoppers. Provide useable hopper volume to match operational and process requirements. Account for working volume lost to angle of repose of dewatered solids.
Biosolids Receiving Facility			
Loading Hopper	2 sized for usable volume to hold a minimum of 60 yd^3 each	1	Design system to be flexible for discharge into any / all hoppers.Provide usable hopper volume to match operational and process requirements at both the loading and receiving plants. Account for working volume lost to angle of repose of dewatered solids.
Receiving Hopper	2 sized for usable volume to hold a minimum of 60 yd^3 each	1	Provide usable hopper volume to match operational and process requirements at both the loading and receiving plants. Provide for unloading from different types of trucks where possible. Account for working volume lost to angle of repose of dewatered solids.
Pumps	1 dedicated pump per unit with one spare pump	1	Provide pump range and turndown capability to match operational and process requirements at both the loading and receiving plants
Incinerators			
Fluidized Bed	2 sized for design loadings w/ largest unit out of service	1	Provide for MACT 129 requirements.

Solids Handling Unit Process	Min. No. of Units Installed	No. of Units Out of Service	Comments
Polymer Systems			
Pumps	1 dedicated pump per unit with 1 spare pump	1	Provide VFD/pump system turndown capability or smaller pumps for low flow requirements at initial plant startup with provisions to replace smaller pumps as plant expands.

F. Access to Unit Processes and Equipment

1. Provide access into enclosed and partially enclosed tanks, channels, and other structures to perform required inspection and maintenance. Design access points to minimize the impact on confined space entry through the use of gates, removable handrail sections, hatches with built in fall protection, anchor points, etc. Provide ground level access for above ground tanks.

2. Provide permanent stairs, ladders, or other assemblies to access tanks, buildings, structures, equipment, valves, components, etc. in accordance with OSHA regulations. Provide landings with handrail systems at the top, and intermediate (as required) elevations of access assemblies. For ladder systems, elevate the first rung approximately 12-inches from the top-of-landing. Do not use Fiberglass Reinforced Plastic (FRP).

3. Provide elevated walkways with handrails in accordance with OSHA requirements to access multiple tanks and/or structures that are located in close proximity to each other. The minimum width of walkways shall be four (4) feet .

4. Provide isolation valves upstream of all devices and appurtenences to allow for maintenance or removal. Provide isolation valves from other tanks that are commonly piped together. Provide manway access into the tank for maintenance and internal inspections.

5. Refer to Section 21 HRSD Safety Standards within this manual for additional requirements.

6. Provide adequate clearance and access at SWIFT recharge well facilities to allow for crane access for pump and pump column removal and installation, well redevelopment and testing and lay down area for pump column pipes and shafts adjacent to recharge well facility. Consideration shall also be given for providing lay down for well construction and space for temporary chemical storage needed for rehabilitation events.

7. Submit equipment removal plan for all major process equipment at 60% and 100% submittal stages.

G. Sampling

1. Sampling is required for process monitoring and control and regulatory reporting. Sampling must be representative and reliable.

2. Sampling hatches shall be provided at designated sampling locations. All sample points shall be provided with 120V outlet connections. Raw influent and final effluent sample points shall be provided with a flow signal.

3. Sampling points are to be planned, designed and designated for all process flows and other samples routinely monitored. Sampling points are to provide representative samples under all operating conditions. In general, sampling points are to be:

   a. Located to include or exclude recycle streams as appropriate.
   b. Well mixed to avoid solids separation.
   c. Representative when process units are taken out of service.
   d. Easily accessible for sampling or maintenance.

4. Provide automatic samplers. Provide connections and appurtenances for automatic samplers. Provide for manual sampling in the event of failure of the automatic sampling equipment.

5. Automatic Samplers:

   a. Provide “composite-only” or “sequential/composite” samplers designed for outdoor/corrosive environments and manufactured with an exterior shell made of UV resistant fiberglass. Enclosures shall be refrigerated and heated to control temperatures inside the unit. Place samplers on housekeeping pads.
   b. Provide for external inputs for flow pacing and local receptacles for power.
   c. Coordinate with HRSD Technical Services Division to provide a bracket and pole for support of the sample tubing, where appropriate.
   d. Provide for training of the plant staff for this piece of equipment. The training is to be included with the purchase price and/or construction contract.
   e. Do not locate samplers in a classified or confined space.

6. Sample points for ozonated water, including sample streams for analyzers, include full enclosed drain piping systems that operate under a partial vacuum to limit safety hazards due to ozone off gassing.

7. Piping for sensors and sample outlets used for automatic process control shall be located as close as practical to the sample draw-off point in the process to minimize ozone residual decay in the sample piping.

8. Instrumentation related to SWIFT Advanced Water Treatment shall have dedicated sample piping provided to each instrument (i.e. instruments shall not be fed from a common sample header). Flow and pressure control and measurement equipment shall be provided as required to meet the requirements for each instrument.

H. Chemical Containment

1. Provide a negative slope (minimum 1/8 inch per foot) on all floors to a sump or drain.

2. Select valves, piping, supports, and sump pump materials to be resistant to chemicals stored.

3. Generally, a sump and pump are preferred over a drain system. Sumps to be recessed to completely drain tank floor.

4. No equipment inside containment area – limit to piping and appurtenances. All tank instrument read-outs are to be located outside of the containment. All pump shutdown HOAs are to be located outside of the containment. If equipment must be located inside containment, locate above expected elevation of contained liquid.. All piping is to be located above expected elevation of contained liquid.

5. Size containment areas to meet local building code. At a minimum, provide storage volume of 110% of the largest tank.

6. Minimize the installation of valves, electrical conduit and heat trace systems within containment areas.

7. Provide for potable or non-potable water for cleaning of the containment areas. For hose connections, provide male polyethylene camlock connections with caps.

8. Draining chemical containment systems shall be initiated manually to ensure that chemicals are not accidentally discharged to the storm drain or plant drain system.

9. Draining chemical containment systems shall be initiated manually to ensure that chemicals are not accidentally discharged to the storm drain or plant drain system.

10. Provide suitable access into containment areas.

11. Avoid piping and conduit penetrations through containment walls and floors.

12. Locate feed pump suction piping within the containment area.

13. Conduct a hydrostatic test of the containment area to ensure that there are no leaks.

14. Provide appropriate waterstop material in all concrete joints.

15. Provide close inspection of concrete workmanship and coating systems prior to the placement of tanks and other equipment.

16. Provide local high level alarm for containment sump that is also capable of being displayed on plant DCS.

I. Chemical Feed Systems

1. General

a. Fill Stations

i. Provide adequate venting in the design of the chemical storage tanks and fill piping. Consider the impact of vent discharge points on equipment and personnel. Chemical suppliers often use compressed air to deliver the chemical into the storage tanks and to remove the contents of the supply hoses into the storage tanks.
ii. Provide male end quick disconnect at fill stations. A dry-break fitting is not required.
iii. Consider use of duplex strainers in parallel on fill line.
iv. Review the diameter of the quick disconnect with the plant staff to limit the possibility of contamination with other chemicals on the plant site.
v. Provide containment to connections and fill stations and provide a drain to a proper discharge point.
vi. Provide suitable ground connection for truck unloading of flammable chemicals. Interlock fill valve permissive with ground connection.

b. Storage Tanks

i. Review sizing criteria for the tank(s) with the plant staff. Carefully consider the number of days of storage, volume needed for dilution, the number of tanks to allow for inspection and maintenance and minimum delivery volumes. A suggested method for calculating the volume of chemical to be stored is:

(a) 15 day peak use at plant capacity, or
(b) 30 day average use at plant capacity (whichever is greater).
(c) For chemicals which degrade significantly with time, such as sodium hypochlorite, use a 7 day peak/15 day average demand to calculate storage volumes.

ii. Consider if level indication is needed with the tank. Ultrasonic type level indicator is preferred except for flammable applications such as methanol, for which radar is preferred. Ultrasonic level indicators should be located in the top/center portion of the tank using a flanged connection. If vertical space is not available above the tank for installation or maintenance of the level indicator, consider the use of a differential pressure cell at the base of the tank.

Refer to Section 30 - Electrical and Instrumentation in this manual for further details regarding level indicators. Provide sight glasses only if a redundant system is needed. If a sight glass is required, provide valves at both the top and bottom.

iii. Set relative elevations of tank and pumps to allow drawoff of full tank volume.

iv. Provide storage tanks with ladders, safety cages, platforms with rails, etc. in accordance with OSHA requirements. Adjacent piping should not limit access to these ladders or critical isolation valves. Isolation valves must be connected directly to the tank. Consider consolidating piping adjacent to tanks to minimize access and maintenance problems. Proper vertical clearance is also important to access tank manways and maintain equipment located on top of these tanks.

v. Provide multiple manway openings for access and ventilation on tanks with volumes greater than 1,000 gallons. Consider placement of manway openings for ease of access.

vi. Provide sloped tank bottoms to allow tanks to be completely emptied using installed drains or pumps.

vii. Design storage tanks considering compatibility with chemicals stored and concentrations anticipated.

viii. Permanently attach each tank's nameplate information including manufacturer, year of manufacture, working volume, empty volume, material of construction, diameter, and product designed to store.

c. Piping & Appurtenances

i. Manifold piping, tanks, and pumps and provide valves and check valves in appropriate locations to allow maximum operational and maintenance flexibility for any tank/pump/process train combination.

ii. Bolt critical valves directly to tank to simplify locating leaks.

iii. Provide an appropriate discharge point for pressure relief valves used for chemical feed systems. Detail or describe the ultimate discharge point if it is not adjacent to the limits of the work for the project.

iv. Provide ventilation lines for calibration columns plumbed to appropriate ventilation discharge points.

v. Provide a permanent pressure gauge on the suction and discharge of each pump with gauge isolation valve.

vi. Provide flushing connections at appropriate locations in each chemical feed system. Provide a hose connection on the suction and discharge piping manifold for flushing the system.

vii. Design piping located under or adjacent to roadways for H-20 loading.

viii. Overhead chemical piping should be avoided whenever possible.

ix. Attach tracer wire to pipe and install buried utility warning tape approximately 18 inches above pipelines.

x. Tubing runs shall be continuous between manholes.

d. Feed Pumps

i. Provide pumps with a calibration column (manufacturer recommended or HRSD Standard). Provide pulsation dampener, elapsed-time meter, back pressure and relief valve as recommended by the Manufacturer.

e. Flow Metering – Provide a valved bypass or other method to allow for removal and maintenance of meters without spilling large amounts of chemical or shutting down critical plant processes.

f. Operations/Maintenance/Accessibility

i. Locate eyewash and emergency shower stations adjacent to new chemical feed systems in accordance with OSHA regulations. The location of these stations ~~should~~ is to be designed to facilitate access with existing facilities. Review the location of existing eye wash stations to determine if these station locations are satisfactory for the new work. See the Emergency Eyewash and Showers paragraph in this Section for further information.

ii. Elevate pumps or other equipment which require regular maintenance at least two feet above the floor or access platform to facilitate maintenance. This preference should not take precedence over the hydraulic requirements of the pump.

iii. Provide duplex unit strainers accessible for maintenance when strainers are required for chemical systems.

iv. Provide access to items of regular use or maintenance (i.e. pump wet ends, isolation valves, etc.) without the need to enter tank containment areas whenever possible. Access to these items should also be provided with as little interference and obstructions as possible.

g. Chemical Off-Gassing – Provide storage tanks with vents larger in diameter (minimum 2 to 5 times) than the fill piping. Carefully consider vent orientation and discharge to limit impacts to worker safety and corrosivity to adjacent facilities. Consider the use of scrubber systems if the discharge of the vent will negatively impact the adjacent area.

h. Electrical Equipment

i. Refer to Section 30 - Electrical and Instrumentation in this manual for further information regarding electrical equipment used for chemical feed systems.

2. Caustic (NaOH) Systems

a. General – Caustic is primarily used by HRSD as part of the odor control process. The product is normally delivered at 50% strength and immediately diluted to a strength of 25%.

b. Storage Tanks

i. Provide steel tanks due to the heat released during the dilution procedure. Utilize a post-weld heat treatment procedure in tank manufacturing.

ii. Provide an automatic batch control system with a metered water source for dilution. Utilize non-potable water for dilution purposes. Provide strainer on the non-potable water source.

iii. Provide for continuous mixing of the storage tank. The pump should be a air operated diaphragm or centrifugal type. Pump to be compatible with heat generated during dilution. Heat tracing and insulation of the tank is not required since the chemical is diluted immediately upon delivery. Insulation and heat tracing of the non-potable water piping is required for outdoor applications.

c. Piping & Appurtenances

i. Provide Schedule 80 CPVC.. For buried locations use piping shall be double contained, either fusion welded high-density polyethylene (HDPE) or PVC with nylon braided reinforced tubing inside a PVC jacket pipe.

ii. Minimize or eliminate threaded fittings and unions whenever possible. Use flanged connections at all fittings, valves and other appurtenances. Gasket, O-rings, and pulsation dampener material shall be EPDM.

iii. Provide metal ball valves for diameters of less than or equal to three inches and metal or fiberglass composite ball valves for diameters over three inches. Provide backpressure valves designed to consider the caustic feed pump discharge pressure range.

iv. Heat trace and insulate all outside pipework.

d. Feed Pumps

i. Provide a minimum of two feed pumps for this application. Pumps should be positive displacement.

e. Flow Metering - Provide magnetic (Mag) type flow meters with a valved bypass for each feed point. Mag meters must be mounted so that they are measuring a full pipe and so that they do not trap gases.

3. Sodium Hypochlorite (NaOCl) Systems

a. General – Sodium hypochlorite is used in the chlorine contact tanks, in the odor control scrubbers, for filamentous control in the returned activated biosolids system, and in other locations throughout the plant. The product is normally delivered at a strength between 12 – 15%.

b. Storage Tanks

i. Storage tanks to be manufactured of fiberglass reinforced plastic (FRP). Material selected to be compatible with field installation of bulkhead fittings. Design flexible connection with tank piping due to expansion / flexure at connection points.

ii. Locate storage tanks indoors or in a covered location outdoors. For indoor locations, consider carefully room ventilation to limit the corrosive fumes common from this chemical. Provide insulation for all tanks located outdoors.
iii. Provide a transfer pump for this application to move product from storage tank to storage tank. Design the system to protect the transfer pump from running dry or provide a pump that is capable of running dry without causing damage to the pump.

c. Piping & Appurtenances

i. Design piping to feed the product in neat (undiluted) form to the final application point to eliminate scaling when mixed with non-potable water. Piping shall be rigid PVC (Schedule 80) for exposed locations and PVC braided tubing for buried locations. The tubing shall be encased in a suitable PVC conduit to limit accidental damage, to provide containment and to allow for removal of the tubing in case of a leak. Provide redundant feed for buried piping for both disinfection and odor control applications. Provide access manholes at buried piping junction points and bends. Design manhole to provide containment of the chemical. Use Weld-On 724 piping glue by IPS Corporation or approved equal. Minimize or eliminate threaded fittings and unions if possible.
ii. Isolation valves shall be of diaphragm type.
iii. Evaluate manifold venting back to storage tank.
iv. Locate pressure relief / venting back to storage tank

d. Feed Pumps

i. Provide a redundant pump for each application. Give careful consideration to the range of flows to be handled with this system. The feed pump system must handle both nighttime low flows and peak high flow conditions. The pumps shall be positive displacement. Provide a variable frequency drive with each disinfection and odor control metering pump.
ii. Provide isolated vent systems back to the storage tanks, flush connections at each pump and calibration column vent piping.
iii. Avoid Viton seats on ball check valves used as part of the pump assembly. HRSD has found that EPDM or teflon coated EPDM is an acceptable elastomer for this application.

e. Flow Metering – Provide magnetic type flow meters with a valved bypass for each disinfection and odor control feed point.

f. Operations/Maintenance/Accessibility

i. Consider the use of a submersible mixing unit at the disinfection application feed point.
ii. Locate all exposed piping in areas that allow easy access for repair and which will not negatively affect adjacent equipment if a leak or spill occurs.

iii. Due to the strong odors resulting from this chemical, scrubber system on all vents are required if storage tanks are located indoors. Leak/fume detection is required if storage tanks are located indoors. Consider room ventilation and the use of 2 speed fans to evacuate excess odors

4. Sodium Bisulfite ($NaHSO_3$) Systems

a. General – Sodium bisulfite is used to dechlorinate the treated effluent prior to discharge at each plant (except for Atlantic Plant). The product is normally delivered at a strength of 38%.

b. Storage Tanks - See Sodium Hypochlorite Systems in this Section for tank requirements except for the following:

i. Locate tanks indoors in a controlled environment due to the likelihood of this chemical freezing.
ii. Provide tanks with insulation.
iii. Provide a two inch diameter fill station quick disconnect. Consider use of a lockable cover on the quick disconnect.
iv. Provide tanks with a recirculation pump to keep the product well mixed and limit crystallization at the air-liquid interface.

c. Piping & Appurtenances

i. Provide Nylon braided reinforcement tubing in PVC. Larger piping using NPW as carrying water is not preferred.
ii. Provide all piping with heat tracing and insulation. Consider providing heat panels in-lieu of heat tracing and insulation at the feed pumps.

d. Feed Pumps – See Sodium Hypochlorite Systems in this Section for pump requirements except for Viton. Viton is an acceptable material for ball check valve o-rings.

e. Flow Metering - Provide magnetic type flow metering with a valved bypass for both non-potable water and sodium bisulfite service.

f. Operations/Maintenance/Accessibility

i. Due to the strong odors resulting from this chemical:
(a) Scrubber systems on all vents are required.
(b) Leak/fume detection equipment is required.
(c) Consider carefully room ventilation and the use of two speed fans to evacuate excess odors.

ii. Due to concerns with chemical freezing (<55 degrees Fahrenheit):
(a) HRSD will provide a large face thermometer in all sodium bisulfite areas.
(b) Consider temperature control alarms in all sodium bisulfite areas.

5. Muriatic Acid (HCL) Systems - Important Note: This chemical is very dangerous and very corrosive. Close attention needs to be paid to materials and the pump/pipe arrangement for safety. Corrosion of electrical components also needs considered.

    a. General – Muriatic acid is used as a process chemical in some odor control systems, to clean odor control scrubbers and for other maintenance purposes. The product is normally delivered at a strength between 25% – 30%.

    b. Storage Tanks - Review the tank sizing criteria with plant staff. The tank volume sizing should include both process and cleaning requirements. It may be more economical to provide multiple tanks at multiple locations.

        i. Provide tanks manufactured of either FRP or HDPE. Design flexible connection with tank piping due to expansion / flexure at connection points.
        ii. Provide tank level measurement.
        iii. Provide a tank vent to an appropriate discharge point. One option for the discharge location of this vent is the odor control scrubber system duct.

    c. Piping & Appurtenances – PVC (Schedule 80) piping is acceptable. PVC braided tubing for buried locations. The tubing shall be encased in a suitable PVC conduit to limit accidental damage, to provide containment and to allow for removal of the tubing in case of a leak.

    d. Feed Pumps – Provide redundant pumps only if the chemical is used as part of the odor control process. Provide a flushing connection at each pump.

    e. Flow Metering - Provide a magnetic type flow meter with a valved bypass only if the chemical is used as part of the odor control process.

    f. Operations/Maintenance/Accessibility

        i. Design based on a batch feed process if the chemical is used for cleaning purposes only.
        ii. Minimize the use of metallic components within the tank containment area.

6. Ferric and Ferrous Chloride/Sulfate ($FeCl_3$, $FeCl_2$ $FeSO_4$) Systems

    a. General

        i. Ferric chloride (30-33% typical delivery concentration) solution is used to remove phosphorus through precipitation at various locations in the treatment process.
        ii. Provide for ferric / ferrous to be fed to the primary, secondary clarifiers and sidestream treatment.
        iii. Dilution of this chemical is normally not required. The product is normally fed neat to the application point.
        iv. Locate proposed ferric / ferrous feed points in areas where metallic gates and/or piping will not be negatively affected.

b. Storage Tanks

   i. Provide FRP tanks due to the corrosive nature of this chemical. Provide a minimum of two tanks. Design flexible connection with tank piping due to expansion / flexure at connection points.
   ii. Consider the need for continuous mixing of the storage tank. If a recirculation system is provided then a pumped system sized for 100% turnover each day should be used. The pump provided shall be a non-metallic type.
   iii. Provide a level indicator for level monitoring. A sight glass on the tank is not required.
   iv. Consider the use of a storage tank fill manifold with duplex basket strainer.

c. Piping & Appurtenances – Provide PVC piping and appurtenances. Valves shall be PVC true union ball type. Support systems for piping and appurtenances shall be non-metallic. For buried applications, use PVC braided tubing encased in PVC conduit to limit accidental damage, to provide containment, and to allow for replacement of the tubing in case of a leak. Install buried utility warning tape and tracer wire approximately 18 inches above all installed pipelines.

d. Feed Pumps

   i. Provide units similar to the requirements for caustic systems.

e. Flow Metering – Provide magnetic type flow meters with valved bypass.

f. Operations/Maintenance/Accessibility – Provide proper ventilation of the corrosive fumes if ferric / ferrous system is located indoors. All items within the tank containment areas and exhaust fans and any associated items shall be non-metallic. All existing metallic equipment in areas where ferric / ferrous will be located must be replaced or protected from corrosive fumes.

7. Aqua-Ammonia (NH_4OH) Systems

a. General – Aqua-Ammonia (less than 20% by weight) is used as a nutrient source to enhance biological growth or is used to control chlorine demand during periods of partial nitrification. This chemical has a high pH, which results in operational problems similar to those found with caustic. The product is normally fed neat to the application point.

b. Storage Tanks - Provide steel or HDPE tanks. The tanks are normally under a small amount of internal pressure, which requires special attention to venting and gas relief systems. Special tank linings are not required. Containment of the tanks is required and an outdoor location for the tanks is acceptable. Provide tank level measurement. A sight glass is not required. Provide a tank vent to an appropriate discharge point. One option for the discharge location of this vent is the odor control scrubber system duct.

c. Piping & Appurtenances - Provide steel piping and appurtenances. The use of threaded fittings is acceptable. Valves shall be ball type, made of steel and rebuildable. For buried applications, use PVC braided tubing encased in PVC conduit to limit accidental damage, to provide containment, and to allow for replacement of the tubing in case of a leak. Install buried utility warning tape approximately 18 inches above all installed pipelines.

d. Feed Pumps - Provide units similar to the requirements for caustic systems. Pumps are normally operated at a constant feed rate.

e. Flow Metering - As required.

8. Polymer Systems

a. General - Polymer systems are used by HRSD for many process applications. Polymers are commonly used to increase solids concentration at thickeners, centrifuges, and for secondary clarification. Many different types of polymers are used by HRSD. Both dry and liquid systems are used at HRSD. Dry feed systems should be located in an indoor and/or controlled environment. A typical liquid polymer system is shown in Figure 31-1.

Figure 31-1: Liquid Feed Polymer System Configuration

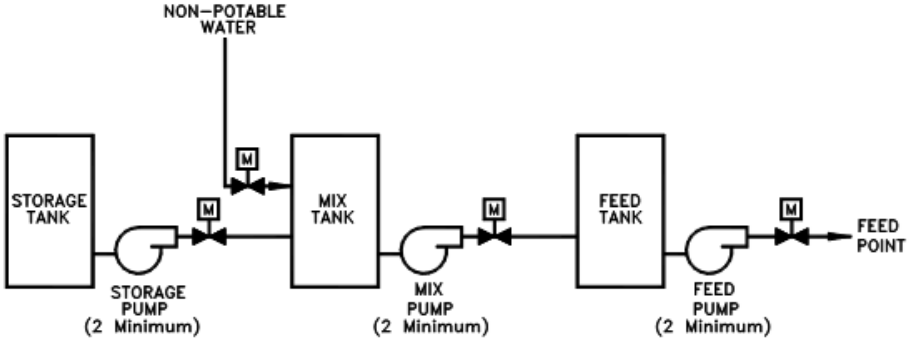

b. Storage Tank

i. Size storage tank for the larger of a 15-day peak use or a 30-day average use. The product is stored neat. Size the mix and feed tanks according to dosage requirements and acceptable age of mix.

ii. Provide HDPE or FRP tanks with a conical bottom if possible. Provide side manway access for cleaning. Locate tanks indoors. Heat tracing and insulation are not required if the tanks are placed in an indoor and temperature-controlled environment. Design flexible connection with tank piping due to expansion / flexure at connection points.

iii. Provide a level indicator for level monitoring. A sight glass on the tank is not required. For automated sequence to control, refer to the HRSD Standard Functional Descriptions.

iv. Provide a mechanical mixer inside the mix tank.

c. Piping & Appurtenances

i. Provide PVC piping and appurtenances. Some polymer products tend to cause interior chemical build-up on the piping system. Provide appropriate flanged connections and unions to allow for removal and replacement. For small diameter piping (< 2 inches) provide PVC ball valves and for large diameter piping (>2 inches) provide PVC plug or ball valves.

d. Storage, Mix and Feed Pumps - Provide rotary or gear type storage pumps for liquid feed applications and progressive cavity type mix/feed pumps.

e. Flow Metering - Provide a magnetic type flow meter and a valved bypass on the discharge of the feed pump combination.

f. Operations/Maintenance/Accessibility – Consider carefully room ventilation. Direct tank vents to a suitable outdoor location.

9. Methanol

a. Refer to HRSD Safety Department's Safe Work Practice and Methanol Response Procedures Documents for this information.

10. Oxygen (O2) Systems

a. General – Oxygen is used to generate ozone gas. Oxygen is stored on site as a cryogenic liquid and is converted to gaseous oxygen using vaporizers. Follow NFPA and building code requirements for maintaining proper distance between storage vessels and occupied buildings. Oxygen is not compatible with hydrocarbons. Liquid oxygen unloading areas shall be free of asphalt or hydrocarbon-based expansion joints. Oxygen storage areas shall include ambient oxygen monitoring equipment, automatic shutdown interlocks, ventilation interlocks, and local and remote alarm notifications.

b. Storage – Provide steel storage tanks. Storage tanks shall be sized such that the anticipated typical "boil-off" of oxygen is less than or equal to the anticipated 5th percentile oxygen usage rate for the treatment facility.

c. Piping and appurtenances – provide stainless steel piping and appurtenances. A connection shall be provided for connecting a temporary liquid oxygen storage system in the event that maintenance must be performed on the installed equipment. Relief valves shall be provided as required to prevent over-pressurization of liquid oxygen between isolation valves. Cleaning of piping and components shall be per CGA G-4.1 and ASTM G93.

d. Operations/Maintenance/Accessibility - ambient oxygen monitoring shall be provided in ozone generator rooms and other locations where high concentrations of oxygen may be present.

11. Ozone (O3) Generation Systems

a. General – Ozone is generated on site from oxygen gas and is applied to the water to oxidize and remove organic contaminants. Selection of ozone generators shall consider maintaining economical use of power and oxygen over the full range of expected operating conditions. Generator startup requirements shall include tuning the generator control loops (i.e. gas flow and power) to provide stable ozone output over the entire ozone generator operating range.

b. Storage – N/A

c. Piping and appurtenances – Gaseous oxygen, ozone destruct, and ozone gas piping shall be 316L stainless steel. Piping that could come into contact with ozonated water shall be 2507 stainless steel and shall not be welded in the field. Piping gaskets shall be PTFE. Cleaning of piping and components shall be per CGA G-4.1 and ASTM G93. Ozone contactors shall be fitted with a properly sized vacuum/pressure release valve to maintain nominal vacuum conditions in the contactor while protecting the structure during filling and rapid drain-down events.

d. Operations/Maintenance/Accessibility - ambient ozone monitoring shall be provided in all facility spaces where ozone may be present (e.g. ozone generator rooms, ozone destruct rooms, sample areas). The ozone control systems shall automatically shutdown interlocks, ventilation interlocks, and local and remote alarm notifications.

12. Aluminum Chlorohydrate (Al2(OH)5Cl) Systems

a. General – Aluminum Chlorohydrate (ACH) is used as a coagulant to destabilize colloidal material and remove organic compounds in SWIFT influent water and develop a floc during the flocculation process for subsequent settling and removal in the sedimentation process. ACH storage and feed systems shall be also be compatible with aluminum hydroxide (alum) and ferric (ferric sulfate or ferric chloride).

b. Storage – ACH tanks shall be FRP.

c. Piping and appurtenances – Yard piping shall be HDPE and routed through a secondary containment casing pipe. Exposed piping shall be Schedule 80 PVC pipe.

d. Flow metering – as required.

13. Phosphoric Acid (H3PO4) Systems

a. General – Phosphoric acid is used as a nutrient source for the SWIFT AWT biologically active filters. Phosphoric acid is normally delivered and fed as a 75% solution.

b. Storage – The storage volume required for phosphoric acid fed as a BAF nutrient source is normally small. Phosphoric acid can typically be received and stored in chemical totes. Chemical totes shall be installed on scales to allow for chemical inventory monitoring through DCS.

c. Piping and appurtenances - Yard piping shall be HDPE and routed through a secondary containment casing pipe. Exposed piping shall be Schedule 80 PVC pipe.

14. Hydrogen Peroxide (H2O2) Systems

a. General – Hydrogen peroxide (H2O2) is used in conjunction with ozone and/or UV to form hydroxyl radicals used for advanced oxidation of target compounds. Hydrogen peroxide can be delivered at a strength of 35% or 50%.

b. Storage – Hydrogen peroxide storage tanks shall be 316L stainless steel or HDPE.

c. Piping and appurtenances – Hydrogen peroxide piping shall be welded or flanged 316L stainless steel. Gaskets shall be expanded PTFE. Ball valves shall be used for isolation and shall be vented. Relief valves shall be provided as required to prevent over-pressurization of hydrogen peroxide between isolation valves.

d. Flow metering – as required.

J. Drain Systems

1. Consider plant drain system hydraulic capacity. A hydraulic grade line should be plotted with each new plant drain. Surcharging of gravity systems should be controlled. Design system to convey contents of the largest tank in less than 12-hours.

2. Gravity drain systems are preferred over pumped systems for all processes except primary and BNR unit process tanks. Provide valves for isolation and throttling of each tank or process. Provide regular access points (manholes) in gravity systems and cleanouts in pumped systems. Provide ability to pump out primary and BNR unit process tanks and return to in-service unit process/tank.

3. Grit, solids handling and polymer process areas require special plant drain considerations due to the likelihood of plugging. Limit fittings, provide flushing connections and cleanouts, provide adequate diameter/slope of gravity drain system. Use long radius fittings.

4. Provide trench drains for pump galleries and evaluate trench drains for containment areas. Grating to be easily removable and corrosion resistant.

5. Provide flushing and cleaning locations with plant drain systems. If multiple processes are connected to the plant drain a method of isolation is needed to allow for effective cleaning operations.

6. Drain systems shall be tested as described in the Pipeline portion of this Section.

7. All concrete embedded drain inlets must be poured with a slope to the drain intlets.

8. Provide drain located under each emergency eyewash and shower.

9. All process tank drains are to be sump, trench, or negative slope floor drains.

10. All process buildings are to have either trench drains to sump or at minimum one floor drain for every 500 square feet of floor area. Floor drains are to be within three feet of process equipment.

11. Plant drains shall return upstream of influent screens.

12. Locate drain valves for ease of access, maintenance, and replacement. Avoid buried valves where possible.

K. Emergency Eyewash and Showers

1. Refer to Section 22 - HRSD Safety Programs for specific requirements.

L. Equipment Numbering Sequences

1. Equipment designations shall correspond to the existing Operations Department equipment identification number (EID) system and/or asset ID and plant unit process designations. All design drawings, specifications and Operations Manuals shall incorporate the plant unit process designation. The EID numbers shall be shown on the Record Drawings. The following alpha-numeric functional coding system is used to determine the EID: Plant Abbreviation/ST or SH/ Unit process – System – Subsystem – Component

   a. Plant Abbreviation – Letter designation for each plant as follows:

      Army Base - AB
      Atlantic - AT
      Boat Harbor - BH
      Central Middlesex - CM
      Chesapeake-Elizabeth - CE
      County Treatment Plant - CSY
      James River - JR
      King William - KW
      Middle Peninsula - MP
      Nansemond - NP
      Town Plant - TSY
      Urbana - U
      Virginia Initiative Plant - VIP
      West Point - WP

Williamsburg - WB
York River - YR

b. Unit Process – Letter designation as follows:

Code		Unit Process
A		Administrative Facilities
B		Plant Utilities
C		Flow Storage/Equalization
D		Preliminary Treatment
DCS		DCS
E		Primary Treatment
F		Intermediate Treatment
G		Secondary Treatment
H		Sidestream Treatment
I		Tertiary Treatment
J		Disinfection
K		Effluent Pumping/Water Reclamation
L		Scum Disposal
M		Biosolids Thickening
N		Biosolids Anaerobic Digestion
O		Biosolids Heat Treatment
P		Biosolids Storage
Q		Biosolids Dewatering
R		Biosolids Incineration
S		Biosolids Composting
T		Biosolids Land Application
U		Odor Control
Z		Spare
AA		SWIFT Administrative Facilities
BB		SWIFT Plant Utilities
CC		SWIFT Flow Equalization
DD		SWIFT Preliminary Treatment
EE		SWIFT Coagulation/Flocculation
FF		SWIFT Sedimentation
GG		SWIFT Ozonation
HH		SWIFT Biofiltration
II		SWIFT GAC Adsorption
JJ		SWIFT UV Disinfection
KK		SWIFT Water Distribution
LL		SWIFT Aquifer Recharge
MM		SWIFT Treatment Residuals
DCS		Distributed Control System

c. The System, Subsystem, and Component designations are assigned by the Maintenance Planner.

2. New equipment shall be designated using a priority sequence based on original plant's existing numbering sequence. The FIRM shall review the sequence with the plant staff early in the design stage of the project.

M. Equipment Spare Parts

1. It is HRSD's goal to minimize the inventory of unnecessary spare parts. Review the plant's needs for spare parts and recommended special equipment/tools with HRSD prior to including these components in the contract documents.

N. Miscellaneous Pump Items

1. Seal Water Piping

   a. Use strained NPW or potable water for this application. Potable water should only be used as a back up seal water source should the NPW pumping system fail. Backflow preventer is required when potable water is used.
   b. Provide manual bypass.

2. Sump Pumps

   a. Sump pumps shall be designed to pass the product/chemicals in the area of the sump. If the materials of construction necessary to safely pass the product/chemical under consideration make the pump cost impractical, consider a lower cost, replaceable sump pump or manual NPW eductor system.

3. Shaft Guards – Manufacturer shall provide shaft guards to comply with OSHA requirements. Refer to 29 CFR 1910 Subpart O Machinery and Machine Guarding. Select material of construction considering specific installation environment conditions.

O. Noise Abatement for Installed Stationary Equipment

1. Refer to Section 22 - HRSD Safety Programs section in this manual.

2. Consider sound attenuation in spaces that house equipment such as blowers, centrifuges, odor control fans, incinerator fans and generators.

3. Minimize location of equipment and control devices in areas with significant noise levels.

4. Design equipment installed in exterior locations such that no offsite noise nuisance will result.

P. Non-Potable Water Systems

1. Non-Potable Water (NPW) systems are used for certain plant treatment processes, cleaning and for flushing systems on some equipment seals. The NPW system should be designed to provide needed pressures at all locations of the plant while meeting regular water demands. A looped piping system that is isolated at each process should be provided.

2. Provide automatic cleaning strainers on the discharge of pumping systems.

3. Provide strainers at each major plant process or critical delivery point.

4. Consider how the NPW pumping system could be expanded in the future. Provide redundant NPW pump and/or an emergency pump connection.

5. NPW piping shall be ductile iron, PVC or HDPE.

6. Provide NPW hydrants at each process location. NPW hydrants shall be located to limit hose lengths to approximately 100 feet. Consider a quick disconnect, valve and drain in-lieu of a hydrant at process tank locations. Provide NPW hydrants with a self draining feature to limit freeze problems.

7. Exposed NPW systems to be painted and marked in accordance with the Miscellaneous, Painting and Coatings section of this document.

8. NPW piping systems shall be separated from SWIFT treatment areas. SWIFT treatment areas shall be provided with potable water (PW), utility water (UW), or SWIFT NPW water for washdown, process make up, or utility water demands.

9. Provide minimum ¾-inch a stainless steel hose reel and washdown station for NPW or SWIFT NPW at each plant process that requires regular cleaning.

Q. Odor Control and Room Ventilation

1. General

   a. The following text lists HRSD's current standards for the design of odor control facilities with respect to H_2S. A different design approach will be required when there is a significant odor concern other than H_2S. This standard addresses chemical packed towers. Consider combination bio-filter-chemical packed tower systems when applicable.

   b. Design odor control facilities to to eliminate off-site nuisance odors. Odor control facilities typically include enclosing the odorous work areas and covering odorous process areas, ducting the odorous gases to scrubbers, and scrubbing the odorous

gases in a two stage packed tower scrubber system. With respect to dual stage chemical packed tower scrubbers:

i. Initially reducing the H_2S concentration to less than 5 ppm in the first stage scrubber using only caustic to maintain a scrubber recirculation water flow pH range of 10 to 12.
ii. Achieving a first stage scrubber effluent H_2S concentration of 1 to 5 ppm with a maximum effluent H_2S concentration of 5 ppm.
iii. Obtaining the remaining H_2S removal in the second stage scrubber using 6.12 gallons of hypochlorite per 1,000 cfm and sufficient caustic to maintain an optimum pH of 9.5 or greater.

NOTE: Alternative oxidant chemicals may be evaluated and utilized. Alternative chemical feed control strategy such as ORP, or continuous H_2S or chlorine gas monitors may be used. Achieving a second stage scrubber maximum effluent H_2S concentration of 0.1 ppm.

2. Air Flow

a. Provide for sufficient air flow from enclosed work areas and covered process areas to provide adequate ventilation and odor control as appropriate. Entrance doors should be labeled with the design air changes per hour.

NOTE: Air flow for work areas occupied by personnel should be based on ventilation requirements as appropriate. Air flow for ventilation should not be routed through odor control facilities wherever practical. Air flow for odor control in some situations can be substantially reduced by pressurizing work areas otherwise requiring only ventilation and drawing off only a portion of the ventilation air flow through the unit process openings for odor control. Air flow for odor control in other situations can be substantially reduced in a work area by using covers or hoods on process equipment. The minimum air change requirement indicated below shall be maintained.

b. Provide air flow based on the more stringent of the NFPA 820 requirements, other applicable codes, or the following design criteria:

i. Air Changes - Provide for the minimum number of air changes as follows:

Type of Area	Air Changes Per Hour
Enclosed work area directly exposed to wastewater or solids with normal access by personnel <u>Examples</u> Bar Screen Room Grit Classifier Room Grit or Scum Dumpster Room Solids or Scum Thickener Room (uncovered) Solids Handling Filter Room Solids Conveyor or Hopper Room Truck Drive Through Room	12 x per hour
Enclosed work area not directly exposed to wastewater or solids with normal access by personnel <u>Examples</u> Solids Handling Centrifuge Room	6 x per hour
Enclosed access, equipment or storage area not directly exposed to wastewater or solids with normal access by personnel <u>Examples</u> Electrical Rooms Stairwells	1.5 x per hour
Covered process area with extreme turbulence or H_2S levels without normal access by personnel <u>Examples</u> Screw Pumps Grit Tanks Pre-aeration Tanks	12 x per hour
Covered process area directly exposed to relatively turbulent wastewater or solids without normal access by personnel <u>Examples</u> Splitter Boxes Solids Handling Tanks (based on empty)	6 x per hour
Covered process area directly exposed to relatively quiescent wastewater or solids without normal access by personnel <u>Examples</u> Non-Aerated Channels Primary Clarifiers (including weirs) Anaerobic/Anoxic Tanks	4 x per hour

Type of Area	Air Changes Per Hour
Covered process area receiving process air without normal access by personnel <u>Examples</u> Aerated Channels Aeration Tanks	Max Process Air + 10%
Enclosed work area where personnel could encounter oxygen or ozone gas <u>Examples</u> Ozone generator room Ozone sample gallery Ozone destruct room	6 x per hour under typical operating conditions 12 x per hour if oxygen or ozone is detected above the alarm value.

i. Face Velocity - Provide for a minimum face velocity of 100 FPM for any indoor unit process opening. Provide for higher face velocities for outdoor unit process openings to counteract wind affects as appropriate.Prevent backdraft of toxic levels into enclosed work areasEnsure destruction of H_2S in scrubber based on past operating experience.

3. Public Acceptance, Nuisance Prevention and Odor Control – Public acceptance, nuisance prevention and odor control for treatment plants must be achieved for HRSD to provide quality service. Adverse impacts to nearby neighbors and communities from treatment plant facilities must be prevented, eliminated or minimized to the extent practical.

   a. Public acceptance is critical for HRSD to build new treatment plant facilities to serve the public. Public acceptance should be paramount when siting, designing and operating facilities, and these activities should be coordinated with the public information program to promote public acceptance. Nuisance prevention is required for treatment plants to be good neighbors. HRSD's goal is to prevent offsite nuisances. Treatment plant facilities should be planned, designed and operated to mitigate offsite nuisances from odor, noise, light, traffic or other causes to the extent practical. Buffer areas should be in accordance with all provisions of the approved SCAT Regulations but in all cases should be at least 300 feet from any potentially nuisance process unit or activity to the property line for new treatment plants. The planning and design of facilities should also account for the inevitable encroachment of new residential, commercial and industrial neighbors on any nearby developable land.

4. Scrubber Equipment

a. Provide for a scrubber train consisting of two packed tower scrubbers connected in series per the following:

Packing detention time	1.3 – 1.6 seconds
Packing depth	10 feet
Packing type	As appropriate
Packing support	Grating or gas injection plate
Recirculation liquid to air ratio	15 – 20 gpm/1,000 cfm
Liquid distribution	Single nozzle if less than 9 foot diameter, or a weir distribution system or multiple nozzle system with nine or more nozzles if greater than nine foot diameter.
Blowdown rate	To be provided
Mist eliminator	Use mesh or media type

b. Provide for one or more individual scrubber trains connected and isolated in parallel to accommodate the required size as appropriate.

c. Provide for one additional fully equipped standby scrubber train including induced draft fan connected and isolated in parallel with the other scrubber train(s).

d. Provide for each scrubber train a discharge stack designed to discharge at sufficient height to disperse the emissions and eliminate offsite odors. Consider adding a directional stack piece on the stack discharge to direct air flow and air flow noise away from populated areas.

5. Chemical Feed

a. Provide for all scrubbers to be fed with caustic and sodium hypochlorite.

b. Provide for chemical feed rates per the following:

i. A minimum caustic feed to first stage scrubber of 3 pounds NaOH per pound of H_2S to obtain a maximum effluent H_2S concentration of 5 ppm.
ii. Sodium hypochlorite feed to the first stage scrubber (as an alternative sodium hypochlorite feed point in lieu of the second stage scrubber) of 2.1 gallons NaOCl per pound of H_2S removed to obtain a maximum effluent H_2S concentration of 5 ppm.
iii. Sodium hypochlorite feed to the second stage scrubber of 6.12 gallons of NaOCl/1,000 cfm and sufficient caustic to maintain a pH of 9.5 in the scrubber recirculation water flow or greater at a maximum influent H_2S concentration of 5 ppm.

c. Provide for new caustic feed and storage facilities located separately or at the existing caustic feed facilities utilizing the available caustic storage facilities to the extent possible. Size the caustic storage tanks for a minimum of 15-days peak use or 30-

days average use.

d. Evaluate the use of existing hypochlorite storage facilities to the extent possible. Size sodium hypochlorite for a minimum 15-days storage at the average design feed rate.

e. Provide for at least one caustic feed pump for each operating scrubber with one standby caustic feed pump for the overall scrubber system.

f. Provide for at least one sodium hypochlorite pump for each operating two stage scrubber system and one standby hypochlorite pump for the overall scrubber system.

g. Provide for automatic pH control of caustic feed for each scrubber using pH monitoring of the scrubber overflow. Also provide for automatic control of caustic feed to the first stage scrubber using continuous H_2S monitors.

h. Provide for automatic control of sodium hypochlorite feed to each second stage scrubber for H_2S removal using ORP or continuous sulfide monitors.

i. Provide for adding chemicals to the suction or discharge side of the recirculation pump and/or to the scrubber sump if baffled to prevent short circuiting. Ensure chemicals are added downstream from the pH meter where feasible.

j. Provide for separate metering of caustic solution, sodium hypochlorite solution and makeup water flows to each scrubber.

k. Provide muratic acid storage, pumping and containment for scrubber cleaning. Provide for manual control of acid feed.

    i. If acid is fed to the first stage scrubber to decrease pH, then acid storage and containment should be sized appropriately. Automatic acid feed based on pH should be provided.

6. Coatings - Provide for coating protection for covered process areas to prevent corrosion due to H_2S attack per the following and refer to the Coatings Manual.

    a. Provide coatings on all exposed interior surfaces of covered process areas and extend coatings to one foot below the low water surface or to an appropriate termination point.

    b. Consider life cycle cost in the selection of coatings.

    c. For areas which can not be isolated and accessed for coatings maintenance using existing plant valving (i.e. splitter boxes, flow distribution chambers/channels, etc.) consider the cost of over pumping in determining life cycle costs. Stronger consideration will be given to anticipated life of the coatings in these areas.

7. Duct Work

a. All duct shall be manufactured of fiberglass reinforced plastic (FRP). All FRP shall have UV protection. Ductwork in most cases should be elevated above ground. Consider access and maintenance of adjacent equipment when locating ductwork.

b. Odorous air is almost always very humid. Provide a drain system at low points in ductwork. Extend drain piping to existing drains or tanks. Drains must have a P-trap sufficient to overcome system vacuum.

8. Room Ventilation (As related to Odor Control)

a. See Air Flow at the beginning of this Section for air flow requirements.

b. Review with plant staff the use of timers, manual overrides and switches for the proposed ventilation system in each area.

c. Provide the maximum distance possible in each building space between intake and exhaust locations to limit short-circuiting of air flow.

d. Utilize non-corrosive hardware for all exhaust fans and vent assemblies.

e. Design screened louvers to be accessible for maintenance and to limit rainwater from entering the building space.

R. Pipe Insulation and Heat Tracing

1. Provide a fiberglass, PVC jacketed insulation system.

2. Provide indicator (on/off) lights on all heat tracing systems.

3. Provide for piping insulation jacket to be color coded and/or stenciled in accordance with HRSD's Piping Identification and Color Code included in the "Miscellaneous" section of this manual.

4. Provide junction boxes/plugs on heat tracing systems to allow for removal of fittings, valves, etc.

5. For new construction, provide power source with appropriate equipment. For retrofits and improvements, indicate a location for the power feed to the proposed heat tracing system and verify that the existing power panel is suited for this application.

6. Refer to Section 32 - Electrical and Instrumentation in this manual for further information regarding electrical equipment and requirements.

S. Primary and Secondary Clarifiers

1. Provide circular clarifiers with center feed, peripheral weir layout..

2. The following system components should also be included in new or modified secondary clarifiers:

    a. Provide design which assures a watertight gearbox.

    b. Provide a biosolids withdrawal system that is compatible with flow proportion RAS flow and does not require manual adjustment when flow volume or concentration changes. A suction plenum or Tow-Bro type biosolids collection system is preferred. Organ pipe drawoff systems are not acceptable.

    c. All components shall be stainless steel.

    d. Provide a modular drive system that can be repaired or replaced without dismantling the clarifier structure.

    e. Provide fiberglass clarifier weir covers designed to allow cleaning of weir and launder channels, or provide weir covers to deter algae growth.

    f. Provide a gravity drain system if possible. Consider a method to fully drain clarifier to allow for inspection and cleaning. Refer to drain system section [insert section number] for additional information.

    g. Provide adequate NPW system to meet cleaning and tank filling needs.

    h. Provide positive control of RAS flow from each individual clarifier.

    i. Provide full diameter scum well and pump. Provide cleanouts.

T. Process Air Piping

1. Process air piping shall be either stainless steel or welded carbon steel. Process air piping shall be placed in the following locations:

    a. Above grade
    b. Direct bury with a proper coating and/or cathodic protection system. Avoid buried pipe whenever possible.

2. Thermal expansion and contraction must be carefully considered with this piping system. Methods for support and/or restraint must be coordinated with the possibility of thermal expansion and contraction.

U. Process Flow Splitting

1. Perform a hydraulic analysis to verify that adequate flow splitting occurs for the following conditions:

    a. Daily Average Flows – existing and at the rated plant capacity.

b. Diurnal Flows – average daily minimum and maximum at existing flow conditions.
c. Unit out of Service – when multiple units are included in the design, consider the impacts of the largest unit out of service.

   i. Provide for flow balancing between multiple units using low velocity channels where feasible. If channels are not possible, provide valves designed for throttling and/or adjustable gates/weirs.
   ii. Buried valves designed for throttling shall be located in a vault and sized to allow for access and future removal of the equipment.
   iii. Review with HRSD the anticipated frequency of flow balancing and the value/cost of providing remote monitoring and control.

V. Scum Handling, Piping and Pumping

1. The type of scum received depends upon the grease loads of the collection system, type of screen equipment, and grease from septage receiving. Scum is any combination of: water, grease, plastics, rags, floatables, and foam (from the biological process). Some general design guidelines and considerations are listed below to limit scum handling problems:

   a. Design preliminary treatment to remove plastics, rags, etc that cause scum conveyance issues. Screening equipment such as band screens and step screens are appropriate.

   b. Eliminate scum pits. The use of pits results in a batch process that tends to plug pipes, pumps and appurtenances.

   c. Automate the handling process to allow for a direct feed system to the scum concentrator and/or incinerator.

   d. Consider the reduction or elimination of scum gravity collection systems.

   e. Locate the scum concentrator to minimize piping and materials handling.

   f. If the WWTP uses bar screens, expect plastics and rags at every collection source; provide grinders at each source.

2. Scum piping is to be 4 inch minimum between the collection source and a concentrator. Provide clean outs at all bends and Y's. Yard cleanouts are to be Y connections at a maximum every 50 feet.

3. Scum grinding is to be as close to the source as possible followed by scum pumping. Scum grinder must be replete with full bypassing capability to accommodate the grinder removal for maintenance.

4. Scum pumping shall be provided using screw, centrifugal or progressive cavity type units. Non-clogging pumps are not substitutes for grinders.

5. When using a well or decanting tank, consider the use of a continuously mixed system and/or heated system to limit the likelihood of the scum from separating or plugging handling equipment.

6. Provide an NPW flush system at the source of the scum collection.

7. Scum concentrators are to be have a minimum retention time of 20 minutes. Scum concentrator hoppers are to be heated.

8. Scum piping after concentration is to be heat traced. Hot water, steam and NPW flushing connections are to be provided at the point of origination and destination. All downstream piping is to use sweeps with Y cleanout connections at a maximum every 50 feet.

9. Scum in the form of foam collected from the biological process is to have provisions for hypochlorite addition and NPW sprays to collapse the foam and allow conveyance.

10. Disposal: Scum may be processed to a landfill after adding an appropriate amendment for the paint filter test (sand, rags, grit, etc.), or it may be incinerated as long as operational impacts are observed as well as adherence to 503 and MACT 129 regulations.

W. Grit, Septage and Grease, and Biosolids – Grit, septage and grease, and foreign biosolids require special consideration and facilities to handle these materials effectively, minimize required labor for operations and maintenance, and prevent nuisance conditions. Inadequate facilities for handling these materials can have a significant adverse impact on overall treatment plant operations and costs.

1. Grit:

   a. Grit handling facilities should be sized based on the characteristics and quantity of grit at the individual treatment plant. Examine the impact of grit on the existing WWTP.

   b. Consider raw influent and plant influent grit characterization sampling to determine grit loading on the plant during dry and wet weather events.

   c. Review collection system infiltration as well as velocities during dry and wet weather to determine grit slug loads. Use 1 ft/sec rule for deposition of grit and 3 – 5 ft/sec rule for re-suspension of grit. Review diurnal flow patterns for the number of grit removal units during wet weather events. Grit removal units such as detritors, head cells, and vortex are to be considered at a minimum. Consider two times the recommended number of vortex units for peak wet weather events. Grit channels are not to be considered.

   d. Individual components including separators, cyclones, classifiers, pumps and piping should be sized for peak grit loadings occurring during storm flow conditions which

may be significantly higher than the corresponding peak flows. Consider vertical cyclones over angled installations to minimize recycle loads on the plant.

e. Provide plug style valves fitted with grit seals. No epoxy-coated plug valves. Provide for easy flushing with NPW at all elbows and tees.

f. Grit handling facilities and grit containers should be located inside enclosed buildings with odor control. Grit containers should be designed for leveling and/or easy moving without significant operator attention. Provide plastic curtains around the dumpsters to minimize the impact of splatter. Provide 6-inch diameter at rollup doors to protect the door frames during grit container removal. Provide bollards or similar for stops upon placement of grit containers. Provide floor drains under grit containers with clean outs.

2. Septage and grease handling facilities should be designed to remove/process these materials and minimize adverse impact on sewage treatment operations in an unattended mode. The addition of septage or FOG receiving may be based on beneficial use of these products in the treatment process, or by lack of other receiving options within a reasonable transport distance. Septage facilities shall be designed to unload a 6,000 gallon septage or grease truck within 15 to 20 minute period. Storage/equalization capacity for the facility shall be provided and based on historical data for peak week average of the total daily discharge volume. Preliminary screening, such as rock traps, grinders, package type screening systems, etc shall be provided to prevent debris from impacting transport and pumping of discharge through pipes and pumps. The combined discharge will be equalized and pumped back to the influent channel downstream of the raw influent sampling point, but before the plant screens. Facilities shall be capable of passing grit and grease. Septage and grease handling facilities and grease and grit containers should be located inside enclosed buildings with odor control. Grease only facilities should be designed to collect, transport, concentrate, load grease containers or otherwise dispose of the grease. Receiving stations shall be integrated with Scale Automation and DCS systems for monitoring and control.

   A washdown area with containment should be provided for each discharge location. Each discharge station shall include a trench drain with a sump located below the discharge station connection. The discharge station connection shall include a 12 inch section of clear tubing and have a single lever operated agricultural knife gate valve for isolation. All connections shall use camlock fittings. Trench drain should span the entire discharge area and slope from both sides to the center sump area. Trench drain grating shall support H20 loading. Trench drain to be a minimum depth of 12 inches and 12 inches wide with a 6% negative slope to sump intersection. Sump area shall be 4’0 x 4’0 x 1.5’. Sump shall include float operated grinder style sump pump that discharges to equalization tank, unless equalization is below grade. All connections to sump pump shall be camlock fittings.

   All equalization tanks shall be accessible and unobstructed to allow cleanout using vac truck for cleaning operations. Provide sloped bottom and center coleetion point to allow for complete emptying. If equalization tank is above grade, a 36-inch diameter side

manway shall be provided on all tanks and integral tank wash down system shall be provided.

3. Dewatered solids handling facilities shall include both receiving and loading facilities based on plants specific or HRSD solids management strategy. Dewatered solids handling facilities should be sized based on the volume/characteristics of biosolids to be handled at the individual treatment plant. The time period required to load or unload a truck or empty a receiving hopper shall be balanced to support both operational and process requirements at the loading and receiving facilities. Dewatered solids receiving facilities at incinerator plants should be designed to accept and hold multiple full truck loads and feed the incinerator in a batch process with or without blending with the treatment plant's own biosolids. Dewatered solids receiving facilities should be designed to accept various truck designs on a case by case basis.

X. Site Lighting

1. Review the footprint of each light to ensure that the proper areas are being lit and that no off-site nuisance light will result. For all new lighting, consider use of high efficient LEDs.

2. Provide task lighting (low level) in-lieu of high mast lighting in areas where nighttime operation and maintenance efforts are required.

3. Use quick-strike capabilities when high-intensity discharge lights are used to allow for immediate access to the area being illuminated. Consider LED systems.

4. Design high-mast lights to meet mimimum lighting level requirements. Refer toSection 22 - HRSD Safety Programs in the manual for specific lighting levels. High-mast lights to operate on photocells. Provide on/off switches for additional lighting on and around individual process tanks.

5. Refer to Section 32 - Electrical and Instrumentation in this manual for further information regarding site lighting equipment and requirements.

Y. Slide and Sluice Gates

1. Gates to be fabricated of cast iron, aluminum, stainless steel, or co-plastic and compatible with process flow and up/downstream chemical discharge.

2. Gates to be provided with double-seated configuration or single seat if flow is limited to one direction.

3. Provide electric operators on gates.

4. Provide redundant gates, stop log channel or other method to isolate gate for maintenance or replacement.

5. Provide for means of access and maintenance platforms at gate actuators, if the working elevation is greater that 5 feet.

6. Gate should be installed so that they can be removed vertically without impedance of overhead structures.

Z. Solids Piping

1. Piping should be stainless steel, HDPE or ductile iron.

2. Provide an NPW flush system.

3. Pumps for centrifuge or thickener feed to be progressive cavity, lobe, or centrifugal with variable frequency drives. Consider the use of grinders, solids screens, or integral pump grinding as part of the pumping system design.

4. Pumps for return and waste biosolids to be centrifugal with variable frequency drives.

5. Return activated solids (RAS) systems should be designed so that multiple pumps can be used to withdraw biosolids from different clarifiers. Operating flexibility and sufficient monitoring/control is critical. The system should be designed to allow for the balancing of solids within each clarifier. An accurate and reliable metering system is critical to the proper operation of this process. Consider flow and mass metering.

AA. Travel Path (Walkway) Alignment

1. Provide walkways in heavily traveled locations (i.e. adjacent to Administration Buildings).

2. Locate walkways for ease of access of plant staff to daily sampling points. Provide ramps for bicycle and cart access.

3. Provide drainage pipes under walkways in lieu of lowering sidewalk elevations at drainage swales.

4. Provide elevated walkways to connect above-grade unit process tanks.

BB. Yard Piping

1. Each piping system should be carefully evaluated for above ground use, buried use and the product being conveyed. Select pipe material taking into consideration the soil conditions and corrosivity. Provide pipe protection as appropriate. The following materials of construction and design features should be considered:

a. Ductile iron – Consider internal and external corrosion. Refer to Section 24 - Pipeline and Appertunances in this manual for further information.

b. Reinforced concrete pipe (RCP) and reinforced concrete cylinder pipe (RCCP) - Provide plastic liner on piping upstream of aeration basins (T-lock by Ameron, LinaBond or approved equal).

c. Welded steel (WSP)– Consider internal and external corrosion. Refer to Section 24 – Pipeline and Appurtenances in this standards manual for further information.

d. High Density Polyethylene (HDPE)

e. Fiber Reinforced Plastic (FRP)

2. At locations of high flow consider the use of concrete channels in-lieu of yard piping. Provide internal coating or liner systems as required.

3. Consider the ability to access, inspect and maintain yard piping after construction is complete. Consider the use of access manways, isolation gates and valves to enter these pipelines.

CC. Functional Descriptions

1. HRSD has developed functional descriptions for each unit process. HRSD's goal is to standardize the processes at the various plants as much as possible. Hence, the FIRM shall use the HRSD Functional Descriptions as a foundation for developing the P&IDs and functional descriptions for all projects. If a functional description is developed for a new process the FIRM shall follow the format of the HRSD functional descriptions.

   The most up to date functional descriptions should be requested by the FIRM at the start of a new project.

DD. Operational Technical Information System (OTIS)

1. HRSD has developed a web based Operational Technical Information System that serves as a repository for plant information and is the basis for the Operational and Maintenance Manual that is submitted to the State. HRSD's goal is to standardize the OTIS structure and layout for each treatment plant as much as possible. The FIRM shall provide HRSD with requested information to populate OTIS. The FIRM shall populate template provided by HRSD for review and acceptance. The OTIS is accessed through HRSD's SharePoint site.

EE. Equipment Startup, Training, and Turnover

1. Refer to Master Specification “01650 – Facility and System Startup System Startup” in Section 40 of this manual.

FF. Flow Metering

1. Provide flow metering for the final effluent regulatory flow. Locate meter to read a true final effluent flowrate. There shall be no recycles to subtract.
2. Provide a Parshall flume and manual verification scale to confirm instrumentation calibration.
3. Verify downstream hydraulics do not impact meter reading at a 10-year peak hourly flow.

End of Section

Section 32 - Electrical and Instrumentation

A. Introduction – The HRSD Operations Department has an Electrical and Instrumentation Division that provides electrical and instrumentation support for all of HRSD. The Engineering Department is responsible for coordinating the electrical review of plans and specifications and coordinating with the Operations Department on design and start-up issues. Based upon HRSD's history with various products and manufacturers, we have developed requirements and needs for certain specific products. Manufacturers of equipment and products are listed in the tables that follow.

B. General – Unless otherwise agreed upon, the FIRM shall design facilities and specify equipment around the names listed in this Section. In all cases NEMA is preferred over IEC rated components. IEC and NEMA/IEC components are not acceptable. Place all electric/electronic equipment indoors whenever possible. The following sections provide independent tables of products and manufacturers for pump stations, interceptor system controls and treatment plants in order to accommodate the different requirements of the various operating departments within HRSD.

- All equipment that is not NEMA rated must be approved by Engineer or Owner.

C. Pump Station and Interceptor Systems – Refer to following Table "Pump Station."

D. Treatment Plant – Refer to following Table "Treatment Plant." Equipment Numbering Sequences shall be in accordance with the Treatment Plant Section of this document.

Index

Pump Station

Item #	Item Description	Page#
1	Switchgear and MCC	3
2	Emergency Generators	7
3	Energy Efficient Motors	13
4	Sump Pumps	13
5	Level Sensing Systems	13
6	Variable Frequency Drives (VFDs)	15
7	Watt Hour Meter (for MCCs or individual motors)	17
8	PLCs/RTU	17
9	Exhaust Fans	17
10	Lighting	18
11	Concrete Housekeeping Pads	18
12	Conduit and Conduit Systems	19
13	Wire	21
14	Relays	21
15	Lockout/Tagout → Safety	22
16	Switches/Receptacles/Plugs	22
17	Electric Heaters	22
18	Electrical Drawings	22
19	Safety Switches (fused or unfused)	23
20	Transformers	23
21	Metering Vaults/Pits	23
22	Pressure Sustaining/Regulating Valves	24
23	Alarm Systems	24
24	Flow Meters	24
25	Antenna	25
26	Louvers/Dampers	25
27	Cathodic Protection	25
28	Junction Boxes and Misc. Enclosures	26
29	Panel Boards/Control Panels	26
30	Miscellaneous Electrical	27
31	Lightning Protection	27
32	SCADA Site Drawing	27
33	SCADA Flowchart	28
34	Dominion Energy Coordination	28
35	Analyzers/Monitors	28
36	Grounding	28
37	Building Classification	29
38	Standard Details	30
39	Air Purification	30

Treatment Plant

Item #	Item Description	Page#
1	Switchgear	31
2	MCCs	34
3	Emergency Generators	37
4	Energy Efficient Motors	43
5	Sump Pumps	43
6	Level Sensing Systems	43
7	Variable Frequency Drives (VFDs)	46
8	Metering Packages for Switchgear	48
9	PLCs TP	48
10	Exhaust Fans	49
11	Lighting	49
12	Concrete Housekeeping Pads	51
13	Conduit and Conduit Systems	51
14	Wire	53
15	Relays	55
16	Lockout/Tagout → Safety	55
17	Switches/Receptacles/Plugs	55
18	Heaters	55
19	Electrical Drawings	56
20	Safety Switches (fused or unfused)	56
21	Transformers	56
22	Metering Vaults/Pits	57
23	Pressure Sustaining/Regulating Valves	58
24	Flow Meters	58
25	RTUs	59
26	Louvers/Dampers	59
27	Transfer Switches	59
28	On-Line Vibration Monitors	60
29	Panel Meters	60
30	Analyzers/Monitors	61
31	Miscellaneous Instrumentation	62
32	Miscellaneous Electrical	63
33	Heating and Cooling	64
34	Junction/Pull Boxes and Miscellaneous Enclosures	64
35	Panel Boards/Control Panels	65
36	Distributive Control System (DCS)	65
37	Lightning Protection	66
38	SWIFT	66
39	Dominion Energy Coordination	66
40	Grounding	66
41	Building Classification	67
42	~~SCADA Details~~ Standard Details	68
43	Air Purification	68

Distributive Control System (DCS)

Item #	Item Description	Page#
1	Strategic Automation Configuration	69

PUMP STATION
Electrical and Instrumentation Requirements

I. Item No. 1

A. Switchgear and MCCs

1. Manufacturers
   a. Eaton
   b. Square D
   c. Allen Bradley
2. Specific Criteria
   a. Design to meet arc flash standard; Reduce incident energy to 12 Cal/Cm2 or lower (MCC and VFD's incident energy should be designed to meet 1.2 Cal/Cm2 if attainable);Reference HRSD Arc Flash Mitigation Document Dated July 9-10, 2013 and additional Power Study Specifications example by SKM Power Systems Analysis, Inc. *(refer to Exhibit A)*
   b. MCCs must be placed indoors in NEMA 12 enclosures (gasketed).
   c. Switchgear must be placed indoors in NEMA 1A enclosure (gasketed).
   d. MCC's providing rear access is not acceptable.
   e. All horizontal / vertical bus must be accessible.
   f. Everything to be face-mounted, motor controls in the MCC are to be marked, lead, 1st lag, 2nd lag selectable, (any combination) with automatic failover (This may be part of the bubbler panel).
   g. Bottom entry versus Top entry routing must be evaluated for application.
   h. Provide with tin-plated copper bus.
   i. Provide feeder breakers with digital trip units.
   j. Provide extra fasteners for door cover.
   k. Provide phenolic labels with black backgrounds and white lettering.
   l. Provide spare terminals for intermediate terminal blocks for controls. Provide feeder breakers with digital trip units.
   m. Provide grounding for Switchgear (Ball type)
   n. The size of the electrical gear is based on the ampacity of the bus within. Typically, electrical rooms are designed to accommodate equipment layout without future considerations for growth, therefore electrical buildings should be sized adequately to accommodate where wall space is needed for future equipment.

o. Electrical rooms should be conditioned to increase the life of sensitive electrical and electronic equipment. Thermostat should be set up to 80 F to control condensation/moisture. Also include a hydrogen sulfide (H2S) removal system if needed.

B. Breakers / Solid State Breakers

1. Manufacturers

a. Eaton

b. Square D

2. Specific Criteria

a. Provide 20 amp minimum

b. Provide remote open/close operator to protect personnel from Arc Flash Incident; operator should be outside of arc flash boundary where possible. (refer to Exhibit M)

c. Provide ARMS "Arc Reduction Maintenance Switch" or equal, when activating downstream breakers incident energy levels will be reduced. Also, add separate pi- lot light to indicate when maintenance mode is enabled or disabled.

d. Provide LSIG digital trip unit if =/> 1000 amps and LSI if < 1000 amps

C. Provide trip units with fault indication to determine status (i.e., overloads or fault conditions) Metering Package.

1. Manufacturers

a. Schweitzer Engineering Laboratories (SEL)

b. Eaton

c. Schneider Electric (Square D)

d. GE

e. Basler

2. Specific Criteria

a. Volt Meter 3 phase & off

b. Ammeter 3 phase & off

c. kW

d. Provide 3 phase undervoltage & overcurrent protection

D. CT Cabinet

1. Manufacturers

a. Provided by Utility

2. Specific Criteria

   a. Locate meter base and CT cabinet on outside of pumping station

E. Selector Switches, Push Buttons, Lighted Push Buttons (NEMA 30mm)

1. Manufacturers

   a. Square D

   b. Eaton

   c. Allen Bradley

2. Specific Criteria

   a. Expandable contact blocks on operator IEC and NEMA/IEC rated switches are not acceptable.

F. Contactors

1. Manufacturers

   a. Eaton

   b. Square D (Contactor must be able to reclose after short power blips)

   c. Allen Bradley

2. Specific Criteria

   a. Provide with expandable auxiliary contacts for 120-volt control circuits

   b. IEC and NEMA/IEC rated contractors are not acceptable.

G. Fuses & Fuse Holders

1. Manufacturers

   a. Bussmann

   b. Shawmut

2. Specific Criteria

   a. Shall be locally available

H. Transformers

1. Manufacturers

   a. Square D

   b. Eaton

   c. ACME

2. Specific Criteria

   a. Copper coils

b. Aluminum coils are unacceptable

I. Terminal Strips

1. Manufacturers

a. Phoenix Contact

b. Square D

c. Weidmuller

d. Panduit Panduct DIN Rail Wiring Duct

2. Specific Criteria

a. DIN Rail mount if possible

b. Industrial rated

c. Provide compression type screws terminals on jumpers

J. Combination Starters (buckets)

1. Manufacturers

a. Square D

b. Eaton

c. Allen Bradley

2. Specific Criteria

a. Provide standalone combination starters in the proper enclosures (see junction/pull boxes and miscellaneous enclosures).

b. 120-volt control voltage

c. Run light – red

d. Stop light – green

e. Fault light – Amber

f. Power available light – white

g. Provide push to test indicator lights

h. Elapsed time meters (Crompton, ENB)–pump motors graduated in 1/10 hours, non-resettable

i. Externally mounted resets, operational from the front

j. Provide with adjustable thermo-magnetic breakers

k. Fused control transformer

l. MCC mounted lighting panels shall be provided with 25% spare breakers

m. Provide spare buckets (minimum 2)

n. Provide connections for motor leads directly from the motors to the starters. Do not use intermediate terminal blocks.

o. No IEC or NEMA/IEC rating (NEMA only).

K. Panel Meters

1. Analog

a. Manufacturers

1) GE/Yokogawa

2) Simpson

2. Digital

a. Manufacturers

1) Yokogawa

2) Red Lion

3) Simpson

3. Elapsed Time

a. Manufacturers

1) Crompton

2) ENB

3) Yokogawa

b. Specific Criteria

1) Non resettable / resettable (plant site specific)

4. Pulse Counters

a. Manufacturers

1) Acromag

2) Omron

5. Isolators

a. Manufacturers

1) Acromag

2) AGMPhoenix

b. Specific Criteria

1) Isolate 4-20 MA and 1-5 volt signals

2) Powered 4-20 MA isolator splitter

3) Terminal relay

4) Compact panel temp sensor 4-20 MA

6. Signal Converters

a. Manufacturers

1) AGM

2) RIS

3) Acromag

b. Specific Criteria

1) Isolate 4-20 MA and digital

7. Surge Protectors

a. Manufacturers

1) Phoenix

2) MTL-Crouse Hinds

b. Specific Criteria

1) Provide 120v AC power supply surge protectors

L. Rubber Mats (in front of gear)

1. Manufacturers

a. Grainger

b. Chesapeake Bay Rubber

2. Specific Criteria

a. Contractor will provide and install at substantial completion (OSHA approved electric safety rubber matting: Type II ASTM D178)

M. Pilot Lights

1. Manufacturers

a. Square D

b. Eaton

2. Specific Criteria

a. Provide LED type pilot lights

b. Provide push to test lamp

c. LED color and light cover color will be specified by HRSD

d. No IEC or NEMA/IEC Rating (NEMA Only)

N. Voltage Test Points

1. Manufacturer

a. Safeside- Grace Engineered Products (Load side of Main Breaker)

b. Panduit VeriSafe

II. Item No. 2

A. Emergency Generators

1. Manufacturers

a. Caterpillar

b. Cummins Onan

c. Kohler

2. Specific Criteria

a. Diesel generators

b. Propane or natural gas-powered engine generators are site specific

c. Engines to be of domestic manufacture whenever possible

d. Standby rated

e. 4-stroke

f. Parts must be available in 48 hours or less

g. Must meet current U.S. EPA and Virginia DEQ air standards

h. Low emission units

i. 48 hours of runtime/Fuel at full load

j. Remote Emergency stop pushbuttons at doorways (Pilla Model GS120 w/clear, hinged plastic cover)

B. Generator

1. Manufacturers

a. Stamford Newage

b. Caterpillar

c. KATO

d. LIMA

e. Marathon

f. Cummins

2. Specific Criteria
    a. Provide permanent magnet exciters
    b. The rectifier shall be a brushless, full-wave bridge
    c. All stator winding leads are to be brought out to the terminal box
    d. Neutrals shall be sized to full rating
    e. Temperature rise shall not exceed Class B rating with 105□□C ambient rise
    f. Alternator shall have a space heater that switches off when running
    g. Provide for 2/3 winding pitch; 5/6 pitch is not acceptable
    h. Minimum Class H insulation (epoxy) with tropicalization (anti-fungus) temperature requirements as specified by NEMA
    i. Provide voltage regulation less than +/- 1%
    j. Provide 150% minimum overspeed capability
    k. Provide amortisseur winding
    l. Provide less than 5% THD (Total Harmonic Distortion)
    m. Provide less than 50 TIF (Telephone influence factor)
    n. Provide Square D/Eaton main breaker of domestic manufacture
    o. Provide elapsed time meter graduated in 1/10 hours (analog or digital), non-resettable
    p. Voltage regulators shall be 3-phase.
    q. Provide 12 leads to switch voltages
    r. Provide flap at the end of exhaust to keep rain, birds, etc. out.
    s. The type of bird screen is site specific.
    t. Sound attenuation is site specific
    u. Provide separate room for indoor generator to reduce heat and noise.

C. Diesel Engine
1. Manufacturers
    a. Caterpillar
    b. Cummins
    c. John Deere
2. Specific Criteria
    a. Heavy-duty, direct-injected, 4-stroke diesel engine.
    b. Provide electronically controlled engines with an electronic control system to meet

current EPA emissions regulations

c. State the control system

d. Provide isochronous frequency regulation (no load to full load)

e. Provide +/- .25% steady state frequency regulation (minimum)

f. Size air, fuel, and oil filters to provide a minimum of 250 hours of operation before servicing

g. Engine manufacturers shall provide fuel separators

h. The heavy-duty air filter is to be a dry type with a restriction indicator

i. Provide a Racor heavy duty crankcase vapor coalescer

j. Provide a battery charging alternator 12V/65 amp, 24v/35amp minimum – negative ground)

k. Skid-mounted radiator sized to prevent overheating in the most severe conditions (122°F ambient)

l. Exhaust system and muffler shall be residential grade muffler (lowest DB reductions available). All insulation must be blanket type (non-asbestos), removable for servicing of exhaust system

m. Provide 12/24-volt DC starting system

n. Provide all diagnostic equipment for complete trouble shooting and training; operational training must be included (software/technical manuals/hardware etc.)

o. Provide speed sensing to protect against accidental starter engagement into a moving flywheel. (Battery charging alternator voltage output will not be accepted for this purpose)

p. Provide an adjustable (0-15 minutes) cool down time

q. Provide a large red emergency stop push button

r. Generator Alarms and shutdowns

    i. Low oil pressure

    ii. Not in auto

    iii. High coolant temperature

    iv. Overspeed

    v. Low fuel (Pre shutdown)

    vi. Generator running and over-crank shall shut down the engine and provide indicator lights.

    vii. All generator alarms/shutdowns provide indicator lights

viii. Separate alarms and shutdowns based on HRSD recommendation and not tie everything to common alarm

s. Provide analog or digital displays for coolant temperature, oil pressure, service hours, engine RPM, system DC volts and system diagnostic code

t. Provide Kim Hot-Start engine block heater (thermostatically controlled); isolation valves must be included.

u. Provide vibration isolators between generator set base and floor

v. Provide lifting eyes bolt

w. Provide break mean effective pressure (BMEP) calculations

x. Provide SCADA interface/data monitoring for HRSD generators

D. Battery Chargers

1. Manufacturers

a. LaMarche

b. Cummins

c. SENS

2. Specific Criteria

a. 12/24-volt chargers or equal

b. Automatic, solid state, provide continuous taper charging

c. UL listed, provide with under/over voltage, current failure, and loss of power acknowledgment

d. Evaluate full float charge versus trickle charge

E. Starting Batteries

1. Manufacturers

a. Exide

2. Specific Criteria

a. Use 8D series lead acid batteries (4D is not acceptable)

b. Provide 2 minimum

c. Each battery shall provide 1200 CCA each

d. Provide with insulated battery rack

e. Provide with 2-year full replacement guarantee

f. Provide as a minimum 2 cranking cycles at a minimum of 30 seconds each

g. Consult engine manufacturer for sizing

F. Day Tanks

1. Manufacturers

    a. Pryco

    b. Tramont

2. Specific Criteria

    a. UL Listed – double wall

    b. Provide with Oberndorfer bronze gear type pump. All pumps must be mounted on Day Tank.

    c. Pumps with rubber or nitrile impellers will not be accepted

    d. Provide with a low-level alarm and light

    e. Size for 2-hour minimum running time

    f. Provide a fuel level indicator on the day tank

    g. Provide a 2-pump system. Each pump shall be capable of pumping 100% fuel oil throughout the entire system.

    h. Provide "Not in Auto" lamp or other warning device

    i. Use momentary switch for tank fill/test

G. Transfer Switches

1. Manufacturers

    a. Eaton

    b. ASCO

2. Specific Criteria

    a. Provide with a metering package

    b. Provide with an exercise cycle of 4 hours, field adjustable from 10 minutes to 4 hours

    c. Provide with a utility power available light normal/emergency, phase indicator lights

    d. Zenith transfer switches are not acceptable.

    e. VFD compatible

    f. Time delay normal to emergency

    g. Time delay engine start

    h. Time delay emergency to normal

    i. Time delay engine cool down

    j. Three phase over voltage (Source 1 & 2)

k. Phase reversal (normal)

l. Three phase under frequency (Source 2)

m. 4 NO / NC form C contacts for (Source 1 & 2)

n. Manual Push to test button which automatically returns to utility & adjustable run timer (0- 600 minutes) (Note: This is not an exercise function)

o. Time delay neutral position

p. Three phase UV protection (Source 1 & 2)

q. Normal position light

r. Emergency position light

s. Normal source available light

t. Emergency source available light

H. Underground Storage Tanks (UST) Leak Detection

1. Manufacturers

a. Veeder Root TLS450 PLUS

b. Xerxes

2. Specific Criteria

a. Provide with leak detection system

b. Provide in accordance with EPA and all applicable state and local standards

c. Provide tank monitoring system

d. Provide a graduated stick for level measuring

e. Provide for refueling and stick access

f. Provide with electronic tank level indicating system

g. Provide with 48-hour fuel tank capacity

h. Provide AMI Model 8CH-DAC 8 channel digital/analog converter (4-20ma)

I. Louvers and Dampers

1. Manufacturers

a. Greenheck

b. Ruskin

2. Specific Criteria

a. Provide gravity damper

b. Provide anodized aluminum louvers and dampers with nylon bushings or ball bearings

c. Provide with bird screens readily removable without removing louvers or dampers

d. Designed to limit rainwater in the building

e. All hardware & components must be the same material and non-corrosive.

f. Where louvers and dampers are required provide (inside) recessed damper and (outside)

g. flange mounted louvers

J. Meter or monitoring package

1. Specific Criteria

a. Provide standard metering package

b. Frequency

c. Provide a voltage adjust rheostat

d. Provide 3 phase undervoltage and over-current protection

e. Provide automatic and manual start and stop

K. Start Up and Testing - Diesel Generator Tests

1. Specific Criteria

a. Provide factory test data

b. Contractors shall verify and provide fuel prior to start up and testing

c. Simulate and test all safety equipment. Using a reactive load bank > 500kW or a resistive load bank <500kW (0.8pF) run the generator:

i. 15 minutes at idle speed

ii. 30 minutes at 25% load

iii. 30 minutes at 50% load

iv. 60 minutes at 75% load

v. 120 minutes at 100% load

vi. 15 minutes at 25% load

vii. 15 minutes at 0% load

viii. off-Record stator, bearing, oil, ambient, and water temperatures every 15 minutes

d. Provide load bank receptacle boxes (site specific – Refer to Exhibit B)

e. Design in such that the station load is not included during load bank test.

f. Take power factor (pF) into consideration for resistive load bank test to ensure generator is not overloaded.

g. Demonstrate all warnings and shutdown alarms (simulation with laptop).

h. Record speed, voltage and amperage at 15-minute intervals as well as just prior to and after the load change

i. Hook up the generator and cycle through the light loading cycles as well as heavy loading cycles (3 each). Record same parameters every 15 minutes and before and after changing load. Tests to be witnessed by HRSD Automotive Superintendent and HRSD Electrical Engineer/Superintendent or designee

j. Create and attach to the switchgear detailed instructions. The instructions shall be laminated. The instructions shall be simple enough for anyone to pick them up and operate the diesel generator set.

k. Group A, B, and C phase cable together to cancel out EMF (Electromagnetic Field)

L. Load Bank Test Box (in Exhibit B "Leviton")

1. Fabricated Load Bank Test Box

2. Alternative Load Bank Test Box

3. Manufacturers

a. ESL Power Systems

III. Item No. 3

A. Energy Efficient Motors

1. Specific Criteria

a. HRSD Electric Motor Specifications in Exhibit E "HRSD Electric Motor Specifications".

b. Emergency stop pushbuttons

IV. Item No. 4

A. Sump Pumps

1. Manufacturers

a. Zoeller Co.

2. Specific Criteria

a. 120-volt

b. Plug into receptacle

c. Float controlled

V. Item No. 5 - Level Sensing Systems

A. Bubbler Type, Ultrasonic (Rosemount), and Submersible

1. Specific Criteria

a. Complete purged air bubbler system for sensing wetwell liquid level which generates and transmits level signals to a separate PLC which controls pump operations

b. Provide UPS for power failure

c. Power light – white

d. Provide with low pressure switch with normally closed dry contacts downstream of the regulator

e. Provide externally mounted duplex air compressors mounted on 30-gallon horizontal receiving tank (Model 3HBB-10-M300 AX) with lead/lag rotation control

f. Provide oil-less compressors with 120-volt 60 cycle, single phase motors with integral thermal overload protection

g. Provide manual purging of bubbler piping

h. Provide manual alternation of air compressors

i. Mount air compressors outside of the panel whenever possible

j. Provide high level alarm in wetwells. Provide with micro (non-mercury) switch backup (float ball)

k. Provide high wet well light and pressure switch

l. Provide overflow light and pressure switch

m. Provide high wet well and overflow push to test lights

n. All alarm contacts are closed in a normal operating state (Closed loop system)

o. Provide high level Floatball for alarms

B. Ultrasonic (site specific)

1. Manufacturers

a. Siemens

2. Specific Criteria

a. Microprocessor

b. FM approved (frequency modulation)

C. Level Transducer (site specific)

1. Refer to Exhibit F - Stilling Well Detail

2. Manufacturers

a. Waterpilot FMX-21 (refer to Exhibit Q)

D. Pressure Sensing Systems

1. Manufacturers

a. Foxboro

b. Rosemont

c. Siemens

2. Specific Criteria

a. Provide either an Ashcroft or Red Valve (series 40) brand pressure seal with Viton boot

b. Provide 0-100psi gauge (Ashcroft)

c. Provide a Foxboro IDPT 10 absolute pressure electronic transmitter

d. See Standard Detail "Pressure Reducing Station Pressure Sensor Detail"

e. Suction and discharge transmitters to be mounted in dry well area

E. Float Balls

1. Manufacturers

a. Flygt

b. Opti Float (Intrinsically Safe – Fiber Optic)

c. CSI Controls

2. Specific Criteria

a. Locate near sump pump in dry well and wet well

b. Alarm on high level

c. Support float ball cable to bottom of well; must be rigid and removable from top

VI. Item No. 6 – Variable Frequency Drives (VFDs)

A. Variable Frequency Drives (VFDs)

1. Manufacturers

a. YASKAWA

b. Allen Bradley

2. Specific Criteria

a. Provide thermal/mag breakers for the drive input power

b. Install equipment with the idea of keeping it clean and the temperature regulated

c. Provide thumbscrews for removable/washable filters or thumb screws replaced by snap in grills that are removable from the front of the cabinet (reusable)

d. Provide a programmable ramp time

e. Provide input reactors (MTE Corp) or TCI

f. Pulse Width Modulated (PWM)

g. IGBTs

h. Automatic restart on power disruption

i. Tune out a minimum of 3 frequencies

j. Hand/Off/Automatic (HOA) selector switch

k. Manual speed pot door mounted (in addition to keypad control)

l. Mount the resets and appropriate indicator lighting on the front of the drive or outside of the box to prevent employees from opening the panel

m. Tune drive to motor with a harmonics meter

n. Provide an input circuit breaker for short circuit protection (Fuses are not acceptable)

o. The controller electronics shall contain indicators of the following conditions:

1) Undervoltage

2) Overvoltage

3) Over temperature

4) Memory failure

5) Emergency Stop

6) Ground fault

7) Instantaneous overcurrent

p. Provide auxiliary run contacts wired to run command for ventilation fan

q. Provide a NEMA 12 flanged disconnect free standing enclosure

r. Mount the resets and the appropriate indicator lighting on the front of the drive or the outside of the box

s. Provide four contact outputs for run status, power failure, VFD failure, not in auto status

t. The following are site specific options:

u. VFD must be able to be isolated and bypassed (auto/manual operation) allowing the motor to operate across the line at full load speed and current

v. Provide manual isolation and bypass capability

w. Provide three contactors for bypass operation

x. 6 Pulse Drive

y. Bypass contactors are site specific; consult with Interceptor Systems & Electrical Shop

3. Additional Design Considerations

a. All electrical components must be NEMA only. IEC or NEMS/IEC is not acceptable.

b. Filters to HVAC units must be maintained and free from dust during construction phase.

c. VFD parameters must be included on as built prints (i.e., momentary power loss ride thru, energy savings, and fault reset)

d. Specify coil locks (Power Quality Solutions) on control relays for power dip ride thru capabilities.

e. Provide Bypass mode for critical VFD's. Soft start or across the line depending on application.

f. Specify main circuit breaker cable operators for breaker operation instead of standard door operating mechanisms.

g. Provide One reset button to reset VFD and control circuit faults.

h. Provide finger safe barriers for main sideline breaker lugs.

i. Provide enough fans to replace each fan within a VFD (spare parts) where several VFD's of the same size and model are specified.

j. Provide paper copies of VFD manuals.

k. To support large and heavy VFD's 60 HP and above, provide a pedestal with a flat plate mounted inside the enclosure for VFD to rest for easy removal. Also provide a lift table to remove VFD.

l. Provide external air filter for easy access on cabinets.

m. Contractor to perform static tuning for optimal performance during startup. Contractor to supply panel shop with motor data sheets including the number of poles per motor. Also, include number of motor poles on motor nameplate.

n. Provide extended warranty by VFD manufacturer where replacement cost is justified.

o. Need all switches to indicate when not in auto

p. Need indication when control power is loss in addition to VFD fault.

q. Evaluate best routing method for bottom versus top entry of wire.

r. VFD shall be sized to provide current necessary for motor to produce continuous rated horsepower and service factor horsepower at highest carrier frequency.

s. Provide VFD Cable with copper shielding, XLPE insulation manufacture by Belden or equal.

   1) Consider these factors when designing motor HP, motor voltage and motor full load current, ambient temperature, VFD cable and connector ratings, and number of cables in raceway.

t. A Harmonic Study Analysis should be performed for all VFD applications by using IEE 519 guidelines. The design engineer should evaluate the best solution to reduce

Harmonic Distortion (ie. passive and active filters or active front end included as part of the VFD).

1) Refer to Exhibit C “Variable Frequency Drive” Specs

u. Provide auxiliary (AUX) to remove run command of VFD before opening contact. Refer to Disconnect – Aux Contact

B. Eddy Current Brake Systems/DC Drives – UNACCEPTABLE

VII. Item No. 7

A. Watt Hour Meter (for MCCs or individual motors) – Meter base and meter

1. Specific Criteria

a. Provided by utility. Locate outside of pump station.

VIII. Item No. 8

A. PLC/RTU

1. Manufacturers

a. Emerson / Control Wave /OCC100

b. Allen Bradley

2. Specific Criteria

a. Provide functional descriptions, the application program, the job-specific program data and a copy of the as-built software documentation

b. Include control & alarms

c. Controls accommodate automatic purge and latch output to current state during bubbler purge

d. Program must be provided using Function Block Programming

e. Control Wave Micro

f. PLC’s and RTU’s shall be equipped with isolation relays for all digital inputs. Example: (Idec 5-blade – 24 VDC coils- with a form C configuration contactor) relays mounted on DIN rail for the purpose isolating relay inputs. Whether a junction box is used or control panel a 24 VDC power supply with sufficient capacity to energize all of the 24 VDC relay coils simultaneously when necessary for all PLC or RTU inputs.

IX. Item No. 9

A. Exhaust Fans

1. Manufacturers

a. ILG

b. Dayton

c. Greenheck

d. Airovent

e. MK Plastics

2. Specific Criteria

a. Corrosion resistant including hardware

b. Must be explosion proof in wet wells and metering vaults

c. Direct drive

d. Belt drive not acceptable unless approved by Owner (Air detection is required if approved).

X. Item No. 10

A. Lighting

1. Manufacturers

a. Holophane

b. Hubbell

c. Thomas

d. Crouse Hinds

2. Specific Criteria

a. Provide proper levels of lighting over major equipment including switchgear, generators, pump motors, and controls. Lighting levels should conform to the IES lighting handbook as a minimum.

b. Provide exterior lighting at doorways and yard lighting required by building configuration.

c. Consider operation by photo electric cell.

d. Replace all light fixtures with LEDs if non-LED style fixture cannot be repaired.

1) Refer to Exhibit D - Lighting Policy

2) HPS, LPS, and Mercury Vapor – NOT ACCEPTABLE FOR ANY APPLICATION

B. Emergency Lighting

1. Specific Criteria

a. Dual Lite GMM-EL-W2 in admin areas

b. Emerg Lite PRO-2 in corrosive areas

c. Wall-paks are provided by HRSD

Note: Install dual input inverters if applicable

C. Exit Lighting

1. Specific Criteria

a. Highly visible 24 hours/day for life of material

D. LED

1. Specific Criteria
2. To reduce maintenance
3. Perform payback analysis

XI. Item No. 11

A. Concrete Housekeeping Pads

1. Specific Criteria

a. Provide a minimum of 4-inch thickness under MCCs, generators, transformers, and other general electrical equipment and around conduits at floor penetration.

b. Chamfer all edges

XII. Item No. 12

A. Conduit and Conduit Systems

1. Specific Criteria

a. Ream and chamfer all edges

b. EMT or IMC are not allowed

c. All flexible conduits shall be metallic liquidtite or equal.

d. Flexible conduit must not be installed to complete one small run between RGS.

e. Provide ¾ inch minimum size. (Where specifically approved or when the instrumentation restricts this size, ½ inch can be used)

f. Do not use plastic anchors.

g. Seal conduits with a silicone product as necessary

h. See Miscellaneous section of these standards for markings and coatings.

i. Seal conduits with OZ Gedney conduit and cable seals or with silicone where seals are not available.

j. Cable trays are not acceptable unless approved by Owner.

k. Label all conduits inside of building (Engineer must provide conduit schedule)

l. Circuit # must be brought back to the panel/breaker.

m. Paint RGS conduits red if requested by owner.

B. Spare Conduit Feeder

1. Specific Criteria

    a. Provide with service entrance.

    b. Add appropriate spares with pull wire.

C. PVC Coated Rigid Steel (inside and out)

1. Manufacturers

    a. Robroy

    b. OCAL

    c. Perma-Cote

    d. Gafco Industries

    e. Plastibond

    f. KorKap

2. Specific Criteria

    a. Provide in wet wells, underground (not encased), chemical areas, outside, and damp areas. Provide with PVC coated fittings, boxes and touch-up material.

    b. Provide 8” of PVC coated conduit were stubbed up through concrete (washdown areas)

D. Galvanized Rigid Steel

1. Specific Criteria

    a. Provide with applications other than PVC coated above.

E. PVC

1. Specific Criteria

    a. Underground/encased reinforced concrete, Schedule 40 can be substituted for galvanized conduit in duct banks where EMI is not a threat.

F. Tools Used

1. Specific Criteria

    a. Use suitable tools with conduit.

G. Patching/Repair

1. Specific Criteria

    a. Use appropriate material to patch and repair.

H. Flex – Liquidtite & Fittings

1. Manufacturers

a. Crouse Hinds

2. Specific Criteria

a. Use fittings to suit installed conduit.

b. Shall be metallic stainless steel, aluminum or equal.

I. Fixtures & Fittings (pull boxes)

1. Specific Criteria

a. Use appropriate fittings and materials.

J. Struts and Straps

1. Specific Criteria

a. To suit conduit materials

b. Use matching fasteners.

c. In outside, wet or damp areas use stainless steel fasteners.

d. PVC coated channel or unistrut are not acceptable.

K. Pull Boxes (wire pulled through) and Junction Boxes (wires terminated inside)

1. Specific Criteria

a. In outside, wet or damp areas, use stainless steel fasteners.

b. Over 6-inch x 6 inch are to be hinged

c. Gasketed

d. Use stainless steel or aluminum in outside or damp areas.

L. Red Dye (Duct bank)

1. Specific Criteria

a. Provide red dye in concrete duct banks.

1) See typical duct bank details in Exhibit J

XIII. Item No. 13

A. Wire

1. Specific Criteria

a. Provide copper stranded wire only.

b. Provide separation of power, signal and telephone services

c. Use compression type lugs only.

d. **Do not splice wire – Splicing not allowed unless approved by Owner/Engineer**

e. Telephone

1) Provide conduit and wiring for telephone.

f. Welding cable (DLO) – Design based on intermittent duty vs. continuous duty.

g. THHN, THWN, XHHW (for duct banks)

1) Follow NEC color coding.

2) All wire shall be stranded wire, rated for 600 volts.

3) #12 minimum wire size for typical applications

h. Instrumentation

1) All wire (MTW) or signal wire shall be rated at 600 volts.

2) DC wire shall be color-coded blue #16 AWG minimum.

3) AC wire shall be color-coded red #16 AWG minimum.

4) Analog signals shall be #18-2 with a shield (minimum), tinned.

5) f. Provide Ethernet cable/CAT 6 for communications to equipment.

Note: Cabinets with multiple sources must be clearly marked as such

XIV. Item No. 14 - Relays

A. Industrial

1. Manufacturers

a. Allen Bradley

b. Eaton

2. Specific Criteria

a. Fixed base

B. Electronic

1. Manufacturers

a. IDEC

b. Potter-Brumfield

c. Agastat

2. Specific Criteria

a. Plug in ice cube type with pilot lights.

XV. Item No. 15 - Lockout / Tagout (Safety) Refer to Section 22 – HRSD Safety Program in this manual for specifics.

XVI. Item No. 16

A. Switches / Receptacles / Plugs

1. Manufacturers
    a. Pass & Seymour
    b. Hubbell
    c. Crouse Hinds
2. Specific Criteria
    a. Provide compression type screw terminals on receptacles. Wire binding receptacles or switches are not acceptable.
    b. Provide for dedicated circuits for sump pumps.
    c. Provide one weatherproof (WP)/watertight receptacle with lockable cover on exterior wall of the pump station on a separate circuit; separately switches and should not be hot at all times.
    d. Provide a receptacle on each wall of the PS, upper & lower levels.
    e. Lower levels shall be mounted at 48 inches above finished floor -Provide one
    f. weatherproof/watertight receptacle on exterior walls on a single circuit, separately switched (Should be “hot” all the time)
    g. Provide ground fault receptacles and breakers where required.
    h. Provide power receptacles in control cabinets.
    i. Provide “in use” covers for indoor sump applications.

XVII. Item No. 17 – Electric Unit Heaters

A. *Not used, do not supply unless a condition requires it.*

XVIII. Item No. 18

A. Electrical Drawings
1. Specific Criteria
    a. Process and Instrumentation Diagrams (P&IDs) are to conform to ISA modified standards (Consulting engineer to provide.
    b. Provide functional descriptions with the P&IDs (Consulting engineer to provide)
    c. Provide Point-to-Point connection drawings. Contractor shall develop.
    d. Review and approval by the engineer shall be prior to installation.
    e. Label all conduits inside building.
    f. Place metal tags on cables in manholes.
    g. Provide final conduit & cable schedule on disk (AutoCAD, PDF or VISIO)

XIX. Item No. 19

A. Safety Switches (fused or unfused)

1. Manufacturers

   a. Square D

   b. Eaton

   c. Allen Bradley

2. Specific Criteria

   a. Light duty safety switches are unacceptable.

   b. Must be pad lockable.

XX. Item No. 20

A. Transformers (Dry)

1. Manufacturers

   a. Square D

   b. Eaton

   c. GE

2. Specific Criteria

   a. No aluminum wires.

   b. Provide 220° C insulation system for 15 kVA and larger.

   c. Provide 180° C insulation system for transformers less than 15 kVA.

   d. Transformers shall handle a 15% overload without exceeding the insulation rating.

XXI. Item No. 21 – Metering Vaults / Pits

A. Dehumidifiers

1. Specific Criteria

   a. Provide receptacle and location for HRSD installation.

B. Power Requirements

1. Specific Requirements

   a. Provide two receptacles with weatherproof covers.

C. Exhaust Fans

1. See Exhaust Fans (item#9)

D. Sump Pumps

1. Provide “in use” receptacle with a remote GFCI breaker located in station power panel.

2. Provide explosion proof sump pump in Class 1 division 1 areas.

E. Lighting

XXII. Item No. 22

A. Pressure Sustaining/Regulating Valves

1. Manufacturers

a. KTM

b. Foxboro

c. Clow

2. Specific Criteria

a. No butterfly valves or pinch valves with controls

b. Provide 4-20 mA operated valves. Do not use pulsed control valves.

c. Automatic Controls of Virginia or Valve Automation for actuator applications

B. Valve Actuators

1. Manufacturers

a. EIM/Bettis

b. Limitorque (refer to Exhibit P)

2. Specific Criteria

a. Auma and Rototorque are not acceptable.

XXIII. Item No. 23

Manufacturer

1. Pure Air or approved equal Alarm Systems

3. Specific Criteria

a. HRSD will provide and install the alarm system. Contractor shall provide sensors and wiring to a junction box and terminate on a terminal strip adjacent to the alarm panel location

b. HRSD will provide alarm points.

C. Station Bypass Alarm Systems (Refer to Exhibit G)

1. Specific Criteria

a. A minimum of two (2) weeks' notice is required to set up temporary alarms for a scheduled station bypass operation.

b. HRSD will provide and install the temporary alarm system. Contractor shall provide sensors and wiring to a junction box and terminate on a terminal strip adjacent to the alarm panel location.

c. HRSD will provide alarm points.

d. Contractors to provide contact names and numbers for alarming purposes.

XXIV. Item No. 24 – Flow Meters (Size for average flows)

A. Magnetic

1. Manufacturers

a. Rosemount

b. Foxboro

2. Specific Criteria

a. Use for control or billing applications.

b. Ensure vendor is clear on application.

c. Provide with remote head, display and keyboard.

B. Ultrasonics (strap on)

1. Manufacturers

a. FUJI

b. Flexim (refer to Exhibit O)

c. Pulsar

2. Specific Criteria

a. Do not use for control.

b. Locate inside station.

C. Venturi

1. Specific Criteria

a. Generally, not used in most applications.

XXV. Item No. 25 – Antenna

A. Mobil Mark

B. Shark Fin Type

C. Omni Directional

XXVI. Item No. 26

A. Louvers/Dampers

1. Specific Criteria

a. See Emergency Diesel Generator Louvers and Dampers (Item #2)

XXVII. Item No. 27

A. Cathodic Protection (Test Stations)

1. Specific Criteria

a. Use Flush Fink Test Stations

XXVIII. Item No. 28

A. Junction Boxes and Misc. Enclosures

1. Manufacturers

a. Hoffman

b. Saginaw

c. Hammond

2. Specific Criteria

a. Provide PVC coated boxes and/or fittings when using with PVC coated conduit. Use "like" materials.

3. Inside

a. Specific Criteria

1) Stainless steel, fiberglass reinforced plastic (FRP), NEMA 4x

4. Outside

a. Specific Criteria

1) Stainless steel, NEMA 4x with Myers hubs

5. Wet

a. Use with PVC coated conduit and PVC coated hubs.

1) Stainless steel, fiberglass reinforced plastic, NEMA 4x with watertight fittings (Myers)

XXIX. Item No. 29

A. Panel Boards/Control Panels

1. Manufacturers

a. Eaton

b. Square D

c. GE

2. Specific Criteria

a. Provide with tin-plated copper bus.

b. Provide 25% spares (minimum)

c. Provide bolt-in breakers.

d. Do not provide cans with pre-stamped knockouts.

e. Provide with hinged panel cover with a latching door.

f. Provide heavy duty industrial grade panel boards.

g. Breaker operator should be outside of panel.

h. Breaker should be located inside of panel.

i. HOA switches should be on the outside of panel.

j. Dead front Hinge panel cover if available.

k. Provide LED work light, if warranted

l. Provide phenolic labels with black backgrounds and white lettering.

XXX. Item No. 30 – Miscellaneous Electrical

A. Electrical Equipment Testing

1. Specific Criteria

a. Provide testing in off-peak hours or switch off an equivalent amount of load prior to testing.

B. One Line Diagram

1. Specific Criteria

a. Provide an update to the one-line diagram with significant changes in the electrical system.

C. Thermographic Inspection

1. Specific Criteria

a. Provide a thermographic inspection of the new systems upon completion.

D. Short Circuit / Coordination Study / Arc Flash

1. Specific Criteria

a. Provide a coordination study short circuit, coordination, and arc flash analysis for new systems or systems with significant changes.

b. The short-circuit calculations and the corresponding incident energy calculations for multiple system scenarios must be compared and the greatest incident energy must be uniquely reported for each equipment location. Calculations must be performed to represent the maximum and minimum contributions of fault current magnitude for all normal and emergency operating conditions. The minimum calculation will assume that the utility contribution is at a minimum and will assume a minimum motor contribution (all motors off). Conversely, the maximum calculation will assume a maximum

contribution from the utility and will assume the maximum number of motors to be operating. Calculations shall take into consideration the parallel operation of synchronous generators with the electric utility, where applicable. Include Arc flash analysis results for generator protective device.

c. Contractor must adhere to NFPA 70E Electrical Safety requirements when working on electrical equipment in HRSD facilities.

d. Engineer must design electrical systems in accordance with NFPA 70E.

Refer to Exhibit A

XXXI. Item No. 31- Lightning Protection Refer to NFPA 820 and NFPA 780. - Lightning Protection applications will be site specific (Discuss with HRSD Electrical Staff).

XXXII. Item No 32 - SCADA Site Drawing (Refer to Exhibit H)

A. For sites without generators should provide battery charger and batteries to maintain reliability.

XXXIII. Item No 33 – SCADA Flowchart (refer to Exhibit L)

XXXIV. Item No 34 – Dominion Energy Coordination (refer to Exhibit K)

A. Easements

1. It is imperative that the design engineer contacts the utility company (i.e., Dominion Energy, Rappahannock Power, Prince George Electric Cooperative, etc.) to determine the responsible territory.

2. Design Engineer and HRSD should inquire with the utility company if single phase or 3-phase power is available at the proposed site.

3. Design Engineer should incorporate right-of-way (ROW), multi-use utility easements, identify property owners, and VDOT requirements as part of the preliminary engineering report (PER) to prevent delays and cost increase during the construction phase of the project. The items listed above should be explored in advance especially in rural communities where 3-phase electrical service is not available.

   a. See Exhibit K for Dominion Project Workflow Brochure “HRSD Interface on New Projects with Dominion Energy Virginia (DEV)”

XXXV. Item No. 35

A. Analyzers/Monitors: Process

1. pH

2. Manufacturers

   a. Foxboro

   b. E&H Memosens CPS16D pH probe (Incinerator scrubber water process) (Site Specific/Specific applications)

   c. M4 Knick (Site Specific/Specific applications)

B. Conductivity

1. Manufacturers

a. Hach

XXXVI. Item No. 36

A. Grounding

"50.53 Grounding Electrode System Installation.

(A) Rod, Pipe, and Plate Electrodes. Rod, pipe, and plate electrodes shall meet the requirements of 250.53(A)(1) through (A)(3).

(1) Below Permanent Moisture Level. If practicable, rod, pipe, and plate electrodes shall be embedded below permanent moisture level. Rod, pipe, and plate electrodes shall be free from nonconductive coatings such as paint or enamel.

(2) Supplemental Electrode Required. A single rod, pipe, or plate electrode shall be supplemented by an additional electrode of a type specified in 250.52(A)(2) through (A)(8). The supplemental electrode shall be permitted to be bonded to one of the following:

(1) Rod, pipe, or plate electrode

(2) Grounding electrode conductor

(3) Grounded service-entrance conductor

(4) Nonflexible grounded service raceway

(5) Any grounded service enclosure

Exception: If a single rod, pipe, or plate grounding electrode has a resistance to earth of 25 ohms or less, the supplemental electrode shall not be required.

(3) Supplemental Electrode. If multiple rod, pipe, or plate electrodes are installed to meet the requirements of this section, they shall not be less than 1.8 m (6 ft) apart."

XXXVII. Item No. 37

A. NFPA 820 Building Classification –

"1. Purpose to provide explosion and fire protection for life property, and operations.

2. Reduce or mitigate the effects of fire or explosion

3. Consult with AHJ (Authority Having Jurisdiction) to ensure that the NFPA 820 standard will be enforced.

NFPA 70 – Article 500

Class I: Flammable Gases/Vapors

Class II: Combustible Dust

Class III: Ignitable Fibers

Wastewater/Treatment/Collections Systems

Class I, Div 1 or 2, Group D (Methane)

Class I, Div 1 or 2, Group G (Sludge)

Wet Well Pump Station

Less than 12 air changes – Division 1

Greater than 12 air changes – Division 2

Typical classified areas: Barscreen, Headworks or Preliminary Treatment Facility, Grit Removal, Odor Control, Sludge Handling and Thickening, etc.

Evaluate equipment type (i.e., explosion proof, conduit seals, etc.)

NFPA 820 4.2.2 – Collections Systems – See Exhibit Y

NFPA 820 5.2.2 – Liquid Streaming – See Exhibit Z

Consideration requirements: exhaust fans, continuous ventilation, alarming, air flow and monitoring."

XXXVIII. Item No. 38 – Standard Details

A. PLC Control Wave – Temp Pump Enclosure Detail and Pump Run Status PS Schematic– See Exhibit S

B. Antenna Installation Detail - See Exhibit T

C. Wet Well Installation Detail – See Exhibit U

D. Intrinsic Safety Panel Wiring Diagram – See Exhibit V

E. Power Wiring Junction Box Detail– See Exhibit W

F. Vault Plans – See Exhibit X

XXXIX. Item No. 39 – Air Purification – Hydrogen Sulfide (H2S) Mitigation for Electrical Room – See Exhibit AA

A. Manufacturer

1. Pure Aire or approved equal.

I. Item No. 1

A. Switchgear

1. Manufacturers

   a. Eaton

   b. Square D

2. Specific Criteria

   a. Design to meet arc flash standard; Reduce hazard category rating to 2 or lower (MCC and VFD's should be designed to meet incident energy of 1.2 Cal/Cm2 or below if attainable); Reference HRSD Arc Flash Mitigation Document Dated July 9-10, 2013.

   b. Provide two 48 VDC control voltage. 48 VDC redundant battery systems for control voltage per incoming primary voltage source. Use 1 Best Battery Selector to switch between each set of batteries (per primary source side) for control voltage.

   c. Stored charge breaker systems are unacceptable.

   d. Sealed Lead acid (VRLA)

   e. NiCAD are not acceptable unless approved by Owner.

   f. Provide tin-plated copper bus.

   g. Provide switchgear indoors in a NEMA 1A (gasketed) enclosure.

   h. Switchgear to be located indoors.

   i. Provide with push to test lights.

   j. Bottom entry versus top entry must be evaluated for application.

   k. Provide in a room strictly for switchgear.

   l. Install 3- or 4-inch windows on switchgear for IR testing for new installations (consult with Electrical Manager)

   m. Equipment should be designed to be double end fed with tie breakers.

   n. Rack out breakers must be racked in and out remotely without opening doors.

   o. Provide remote open/close operator to protect personnel from Arc Flash Incident; operator should be outside of arc flash boundary where possible. (refer to Exhibit N)

p. Provide ARMS "Arc Reduction Maintenance Switch" or equal, when activating downstream breakers incident energy levels will be reduced. Also, add separate pilot light to indicate when maintenance mode is enabled or disabled.

q. Provide hinged doors if available.

r. Design electrical gear/equipment to achieve an arc flash rating of Cat 2 or less.

s. Provide trip units with fault indication to determine status (i.e., overloads or fault conditions)

t. Provide LSIG digital trip unit if =/> 1000 amps and LSI if < 1000 amps

u. Provide extra fasteners for door cover.

v. Provide phenolic labels with black backgrounds and white lettering.

w. The size of the electrical gear is based on the ampacity of the bus within. Typically, electrical rooms are designed to accommodate equipment layout without future considerations for growth, therefore electrical buildings should be sized adequately to accommodate where wall space is needed for future equipment.

x. Electrical rooms should be conditioned to increase the life of sensitive electrical and electronic equipment. Thermostat should be set up to 80 F to control condensation/moisture. Also include a hydrogen sulfide (H2S) removal system if needed.

Note: 1. For reliability and the ability to safely troubleshoot and perform maintenance on switchgear and MCC's, the main switchgear should be double ended with a Bus tie. (The main gear shall provide each piece of major electrical equipment with an A and B feeder from each end.) Each MCC shall have a double ended configuration with Bus ties and Kirk Key interlocks to allow isolation of ½ the electrical gear at the MCC level.

2. When this is not possible, alternatives shall be investigated for critical electrical equipment for critical processes. *(Return to MCCs)*

Reference HRSD Arc Flash Mitigation Document Dated July 9-10, 2013, and additional Power Study Specifications example by SKM Power Systems Analysis, Inc.

Refer to Exhibit A

B. Breakers/Solid State Breakers

1. Manufacturers

a. Eaton

b. Square D

2. Specific Criteria

a. Provide appropriate spares and spaces.

C. Metering or Monitoring Package (Utility Grade Metering)

1. Manufacturers

a. Schweitzer Engineering Laboratories (SEL)

b. Eaton

c. Schneider Electric (Square D)

d. GE

e. Basler

2. Specific Criteria

a. Provide utility grade metering.

b. Volt Meter 3 phase & off

c. Ammeter 3 phase & off

d. kW

e. PF

f. kVA

g. kVAR

h. Utility grade CTs & PTs

i. Metering packages (See Item No. 8)

j. Provide 3 phase undervoltage & overcurrent protection (open Delta PTs are unacceptable)

k. Provide testing that trips the main with a loss of any of the three legs.

l. Generator must be designed to be manually initiated to return to utility.

D. Selector Switches, Push Buttons, Lighted Push Buttons

1. Manufacturers

a. Square D

b. Eaton

c. Allen Bradley

2. Specific Criteria
    a. Expandable contact blocks on operators
    b. NEMA/IEC rated switches are not acceptable.

E. Contactors
1. Manufacturers
    a. Eaton
    b. Square D
    c. Allen Bradley
2. Specific Criteria
    a. Provide with expandable auxiliary contacts for 120-volt control circuits.
    b. NEMA/IEC rated contactors are not acceptable.

F. Fuses & Fuse Holders
1. Specific Criteria
    a. Must be locally available.

G. Switchgear Control Transformers
1. Specific Criteria
    a. Provide copper coils.
    b. Aluminum coils are unacceptable.

H. Terminal Strips / DIN Rail (Space Saver)
1. Manufacturers
    a. Phoenix
    b. Contact
    c. ILSCO
    d. Square D
    e. Weidmuller
    f. Panduit Panduct
2. Specific Criteria
    a. Rail mount if possible
    b. Industrial rated
    c. Finger safe
    d. Provide compression type screws terminals on jumpers.

I. Rubber Mats

1. Specific Criteria

   a. Contractor will provide and install at substantial completion (OSHA Approved: Type I I ASTM D178)

   b. Add matting in front of gear.

J. Pilot Lighting

1. Specific Criteria

   a. Provide LED type pilot lights.

K. Protective Relays

1. Manufacturers

   a. Schweitzer Engineering Laboratories

   b. GE

   c. Basler

2. Specific Criteria

   a. Provide 10-year warranty.

   b. Solid State

   c. Provide integral remote racking system of breakers from control room via HMI to ensure the safety of employees by removing the breaker on and off bus safely and out of the Arc Flash boundary.

L. MCCs

1. Manufacturers

   a. Eaton

   b. Square D

   c. Allen Bradley

2. Specific Criteria

   a. Provide with tin-plated copper bus.

   b. MCCs to be placed indoors in a NEMA 12 (gasketed) enclosure.

   c. Provide redundant feeders to either end of the MCCs with a bus tie in the middle whenever possible.

   d. Provide with Kirk key interlocks door (mounted)

   e. Do not provide in the same room with chemical tanks or pumps.

   f. Provide with “push to test” lights.

g. Bottom entry vs. top entry must be evaluated based on application.

h. Provide with face mounted operators and resets.

i. Design to meet arc flash standard.

j. Provide extra fasteners for door cover.

k. Provide phenolic labels with black backgrounds and white lettering.

l. Provide spare terminals for intermediate terminal blocks for controls.

m. The size of the electrical gear is based on the ampacity of the bus within. Typically, electrical rooms are designed to accommodate equipment layout without future considerations for growth, therefore electrical buildings should be sized adequately to accommodate where wall space is needed for future equipment.

n. Electrical rooms should be conditioned to increase the life of sensitive electrical and electronic equipment. Thermostat should be set up to 80 F to control condensation/moisture. Also include a hydrogen sulfide (H2S) removal system if needed.

Notes: See General Notes, Item 1 – Switchgear

M. Breakers/Solid State Breakers

1. Manufacturers

   a. Eaton

   b. Square D

N. Metering/Monitoring Package (For applications other than utility grade metering)

1. Manufacturers

   a. Eaton IQ SEL

   b. Square D

   c. Power Logic

   d. Schweitzer Engineering Laboratories (SEL)

2. Specific Criteria

   a. Volt Meter 3 phase & off

   b. Ammeter 3 phase & off

   c. kW

   d. PF

e. kVA

f. kVAR

g. CTs & PTs

h. Metering packages (See Item No. 8)

O. Selector Switches, Push Buttons, Lighted Push Buttons

1. Manufacturers

a. Square D

b. Eaton

c. Allen Bradley

2. Specific Criteria

a. Expandable contact blocks on operators

P. Contactors

1. Manufacturers

a. Eaton

b. Square D (Contactor must be able to reclose after short power blips)

c. Allen Bradley

2. Specific Criteria

a. Provide with expandable auxiliary contacts for 120-volt control circuits.

Q. Fuses & Fuse Holders

1. Manufacturers

a. Bussmann

b. Shawmut

2. Specific Criteria

a. Must be locally available.

R. MCC CTs and PTs

1. Manufacturers

a. Square D

b. Eaton

c. Allen Bradley

2. Specific Criteria

a. Metering

b. Provide copper coils.

c. Aluminum coils are unacceptable.

S. Terminal Strips

1. Manufacturers

a. Pheonix

b. Contract

c. ILSCO

d. Square D

e. Weidmuller

2. Specific Criteria

a. Rail mount instrumentation if possible

b. Industrial rated

T. Combination Starters (Buckets)

1. Manufacturers

a. Square D

b. Eaton

c. Allen Bradley

2. Specific Criteria

a. 120-volt control voltage

b. Run light – red.

c. Stop light – green.

d. Fault light – amber

e. Power available light – white

f. Provide push to test indicator lights.

g. Elapsed time meters–graduated in 1/10 hours Resettable or Non-resettable (plant/site specific; incorporate time meters on DCS if available)

h. Provide overload resets operational from the front (external)

i. Provide with adjustable thermo-mag breakers.

j. Fused control transformer.

k. 25% spares and/or spaces for all sizes of buckets or expandable option

l. MCC mounted lighting panels shall be provided with 25% spare breakers.

m. Provide connections for motor leads directly from the motors to the starter. Do not use intermediate terminal blocks (50 HP and smaller)

n. Provide standalone combination starters in the proper enclosures (See Junction/Pull Boxes and Miscellaneous Enclosures)

U. Rubber Mats (to be placed in front of gear)

1. Manufacturers

a. Grainger

b. Chesapeake Bay Rubber

2. Specific Criteria

a. Contractor will provide and install at substantial completion (OSHA approved: Type II ASTM D178)

V. Voltage Test Points

1. Manufacturer

a. Safeside-Grace Engineered Products (Load side of Main Breaker)

b. Panduit VeriSafe

II. Item No. 2

A. MCCs

1. Manufacturers

a. Eaton

b. Square D

c. Allen Bradley

2. Specific Criteria

a. Provide with tin-plated copper bus.

b. MCCs to be placed indoors in a NEMA 12 (gasketed) enclosure.

c. Provide redundant feeders to either end of the MCCs with a bus tie in the middle whenever possible.

d. Provide with Kirk key interlocks door (mounted)

e. Do not provide in the same room with chemical tanks or pumps.

f. Provide with “push to test” lights.

g. Bottom entry vs. top entry must be evaluated based on application.

h. Provide with face mounted operators and resets.

i. Design to meet arc flash standard.

j. Provide extra fasteners for door cover.

k. Provide phenolic labels with black backgrounds and white lettering.

l. Provide spare terminals for intermediate terminal blocks for controls.

m. The size of the electrical gear is based on the ampacity of the bus within. Typically, electrical rooms are designed to accommodate equipment layout without future considerations for growth, therefore electrical buildings should be sized adequately to accommodate where wall space is needed for future equipment.

n. Electrical rooms should be conditioned to increase the life of sensitive electrical and electronic equipment. Thermostat should be set up to 80 F to control condensation/moisture. Also include a hydrogen sulfide (H2S) removal system if needed.

Notes: See General Notes, Item 1 – Switchgear

B. Breakers/Solid State Breakers

1. Manufacturers

a. Eaton

b. Square D

C. Metering/Monitoring Package (For applications other than utility grade metering)

1. Manufacturers

a. Eaton IQ SEL

b. Square D

c. Power Logic

d. Schweitzer Engineering Laboratories (SEL)

2. Specific Criteria

a. Volt Meter 3 phase & off

b. Ammeter 3 phase & off

c. kW

d. PF

e. kVA

f. kVAR

g. CTs & PTs

h. Metering packages (See Item No. 8)

D. Selector Switches, Push Buttons, Lighted Push Buttons

1. Manufacturers

a. Square D

b. Eaton

c. Allen Bradley

2. Specific Criteria

a. Expandable contact blocks on operators

E. Contactors

1. Manufacturers

a. Eaton

b. Square D (Contactor must be able to reclose after short power blips)

c. Allen Bradley

2. Specific Criteria

a. Provide with expandable auxiliary contacts for 120-volt control circuits.

F. Fuses & Fuse Holders

1. Manufacturers

a. Bussmann

b. Shawmut

2. Specific Criteria

a. Must be locally available.

G. MCC CTs and PTs

1. Manufacturers

a. Square D

b. Eaton

c. Allen Bradley

2. Specific Criteria

a. Metering

b. Provide copper coils.

c. Aluminum coils are unacceptable.

H. Terminal Strips

1. Manufacturers
    a. Pheonix
    b. Contract
    c. ILSCO
    d. Square D
    e. Weidmuller
2. Specific Criteria
    a. Rail mount instrumentation if possible
    b. Industrial rated

I. Combination Starters (Buckets)

1. Manufacturers
    a. Square D
    b. Eaton
    c. Allen Bradley
2. Specific Criteria
    a. 120-volt control voltage
    b. Run light – red.
    c. Stop light – green.
    d. Fault light – amber
    e. Power available light – white
    f. Provide push to test indicator lights.
    g. Elapsed time meters–graduated in 1/10 hours Resettable or Non-resettable (plant/site specific; incorporate time meters on DCS if available)
    h. Provide overload resets operational from the front (external)
    i. Provide with adjustable thermo-mag breakers.
    j. Fused control transformer.
    k. 25% spares and/or spaces for all sizes of buckets or expandable option
    l. MCC mounted lighting panels shall be provided with 25% spare breakers.
    m. Provide connections for motor leads directly from the motors to the starter. Do not use intermediate terminal blocks (50 HP and smaller)
    n. Provide standalone combination starters in the proper enclosures (See Junction/Pull Boxes and Miscellaneous Enclosures)

J. Rubber Mats (to be placed in front of gear)

1. Manufacturers

   a. Grainger

   b. Chesapeake Bay Rubber

2. Specific Criteria

   a. Contractor will provide and install at substantial completion (OSHA approved: Type II ASTM D178)

K. Voltage Test Points

1. Manufacturer

   a. Safeside-Grace Engineered Products (Load side of Main Breaker)

   b. Panduit VeriSafe

III. Item No. 3

A. Emergency Generators

1. Manufacturers

   a. Caterpillar

   b. Cummins

2. Specific Criteria

   a. Diesel generators

   b. Turbine generators are not acceptable unless approved by Owner.

   c. Engines to be of domestic manufacture whenever possible.

   d. 4-stroke diesels **ONLY**

   e. Parts must be available in 48 hours or less.

   f. Must meet current U.S. EPA and Virginia DEQ air standards.

   g. Low emission units

   h. All units shall be Standby Rated

   i. Remote Emergency stop pushbuttons at doorways (Pilla Model GS120 w/clear, hinged, plastic cover)

   j. Provide separate room for indoor generator to reduce heat and noise.

B. Generator

1. Manufacturers

   a. Stamford

   b. Newage

c. Caterpillar

d. KATO

e. LIMA

f. Marathon

g. Cummins

2. Specific Criteria

a. Generators 1 MWatt and larger require a two-bearing generator unless the manufacturer has engineered the engine main bearing to reliably withstand the dynamic rotor loads and weights

b. The rectifier shall be a brushless, full-wave bridge.

c. <400 kW and below at 480 volts bring all leads out to the terminal box.

d. 400 kW and above – bring out 3 leads and a neutral (minimum) to the terminal box.

e. Neutrals shall be sized to full rating (brought out to the terminal box)

f. Temperature rise on generator voltages 4160 & higher shall not exceed Class B rating with 80° C ambient rise. All others shall not exceed 105° C rating.

g. Alternator shall have a space heater that switches off when running.

h. Provide for 2/3 winding pitch.

i. Minimum Class H insulation (operating temperature class 180° C) with topicalization (anti-fungus)

j. Provide voltage regulation less than +/- 1%

k. Provide 150% minimum overspeed capability.

l. Provide amortisseur winding.

m. Provide less than 5% THD (Total Harmonic Distortion)

n. Provide less than 50 TIF (Telephone influence factor)

o. Voltage regulator shall be 3-phase.

C. Diesel Engine

1. Manufacturers

a. Caterpillar

b. Cummins

2. Specific Criteria

a. Heavy-duty, direct-injected, 4-stroke diesel engine.

b. Provide electronically controlled engines.

c. Provide electronically controlled engines with an electronic control system.

d. Require vendor to identify the control system to be provided.

e. Provide system software and training to fully troubleshoot and operate the engine

f. Provide isochronous frequency regulation (no load to full load)

g. Provide +/- 0.25% steady state frequency regulation (minimum)

h. Air, fuel and oil filters shall be sized to provide a minimum of 250 hours of operation before servicing

i. Engine manufacturers shall provide fuel water separators.

j. The air filter is to be a dry type with a restriction indicator.

k. Provide RTD's for monitoring bearing and winding temperatures.

l. Add vibration monitoring if > 1000 KW.

m. Provide a Racor heavy duty crankcase vapor coalesce.

n. All radiators and supporting appurtenances are to be galvanized steel.

o. The radiator core shall have solder coated fins to prevent corrosion by hydrogen sulfide gas.

p. Size radiator to prevent overheating in the most severe conditions (122°F ambient)

q. Exhaust system and muffler shall be residential grade muffler (lowest DB reduction available). All insulation must be blanket type (non-asbestos), removable for servicing of exhaust system.

r. The starting system shall be 24-volt DC.

s. Provide all diagnostic equipment for complete trouble shooting (software/technical manuals/hardware etc.)

t. Speed sensing shall be provided to protect against accidental starter engagement into a moving flywheel.

u. Battery charging alternation output voltage will not be acceptable for this purpose.

v. Provide an adjustable (0-15 minutes) cool down time.

w. Provide a large red emergency stop push button.

x. Low oil pressure, high coolant temperature, overspeed, and over-crank shall shut down the engine and provide indicator lights

y. Analog or digital displays shall be provided for coolant temperature, oil pressure, ser- vice hours, engine RPM, system DC volts and system diagnostic code

z. Provide Kim Hot-Start engine block heater (thermostatically controlled) set in accordance with manufacturer's recommendation (120°F – 140°F)

aa. Provide vibration isolators between generator set base and floor
bb. bb. Provide lifting eyes.

cc. Provide brake mean effective pressure (BMEP) calculations.

dd. Provide means of quantifying flows from the day tank to the diesel and from the diesel back to the main tank.

D. Battery Chargers

1. Manufacturers

   a. LaMarche

   b. Cummins

   c. SENS

2. Specific Criteria

   a. 24-volt chargers or LaMarche equal

   b. Automatic, solid state, provide continuous taper charging.

   c. UL listed, provide with under/over voltage, current failure and loss of power acknowledgment.

   d. Full Float Charge versus trickle charge must be evaluated for application.

E. Starting Batteries

1. Manufacturers

   a. Delco -DEKA

   b. Exide Switch locations

2. Specific Criteria

   a. Use 8D lead-acid batteries (4D is not acceptable)

   b. Provide a minimum of 2. The batteries shall provide 1200 CCA each.

   c. Provide with insulated battery rack.

   d. Provide a 2-year full replacement guarantee.

   e. Provide as a minimum 2 cranking cycles at a minimum of 30 seconds each.

F. Air Starter

1. Manufacturers

   a. Ingersoll Rand

2. Specific Criteria

   a. Site Specific

G. Day Tanks

1. Manufacturers

   a. Pryco

   b. Simplex

   c. Tramont

2. Specific Criteria

   a. UL Listed – double wall.

   b. Provide with Oberndorfer bronze gear type pump. Pumps with rubber or nitrile impellers will not be accepted

   c. Provide with a low-level alarm. Size for 2-hour minimum running time

   d. Provide a fuel level indicator on the day tank.

   e. Provide a two-pump system. Each pump shall be capable of pumping 100% of the fuel oil for all generators.

   f. Fuel shall be returned to the day tank.

   g. Provide Not in Auto lamp or other warning device.

   h. Meet all VDEQ requirements.

H. Underground Storage Tanks (UST)

1. Manufacturers

   a. Veeder Root TLS450 PLUS

   b. Xerxes

2. Specific Criteria

   a. Provide in accordance with EPA and all applicable state and local standards.

   b. Provide with leak detection system.

   c. Provide a graduated stick for level measuring.

   d. Provide for stick access and refueling.

   e. Provide with 7 days of fuel tank capacity.

   f. Provide an electronic tank level indicating system with a 4-20 mA output calibrated to the tank or Ethernet connection (TCP/IP)

   g. Provide AMI Model 8CH-DAC 8 channel digital/analog converter (4-20ma)

I. Sub-base Fuel Tanks

1. Provided by Generator Manufacturer.

2. Must meet all UL-142 requirements for double-walled fuel tanks (Site Specific).

3. Must provide generator 48 hours of runtime at 100% load.
4. Must include high level, low level, and leak detection alarms.

J. Enclosure

1. Sound level is site specific. Must not exceed 75dBA @ 23 ft.
2. Must have full access to engine, generator, and controls.
3. Must be able to operate at 100% load in all weather conditions.

K. Louvers and Dampers

1. Manufacturers
   a. Greenheck
   b. Ruskin
2. Specific Criteria
   a. Aluminum or PVC with hardware
   b. Provide for gravity dampers on emergency generator systems (For motor operated applications, must fail to open position if power loss)
   c. Provide anodized aluminum dampers with nylon bushings or ball bearings.
   d. Steel and/or steel shafts are not acceptable.
   e. Provide with bird screens readily removable without removing louvers or dampers.
   f. Designed to limit rainwater in building.
   g. Where louvers and dampers are required, provide recessed dampers (inside) and flange mounted louvers (outside)
   h. Manufacturer shall set and balance the system.

L. Metering/Monitoring Package

1. Specific Criteria
   a. Volt meter 3 phase & off
   b. Ammeter 3 phase & off
   c. Frequency
   d. kW
   e. PF
   f. kVA
   g. kVAR
   h. kWh
   i. Utility grade CTs & PTs

j. Metering packages (See Item No. 8)

k. Provide 3 phase undervoltage & overcurrent protection.

l. Synchroscope

m. Sync lights

n. Supply a TCP/IP modbus link with an HRSD supplied IP address, subnet mask, and gateway to allow the Emerson DCS (or other monitoring system) to read all data registers from the generators and the associated MCC hardware. This includes run statuses, breaker statuses, voltage, current, diesel generator engine data, etc.

M. System Operation

1. Specific Criteria

a. Provide protection such that the two sources (utility & emergency generator) can never be closed out of phase

b. Provide approvals by Dominion Virginia Power on the paralleling protection scheme

c. Provide a selector switch to allow the operator to choose “curtailment” or “loss of power” (typically set to “loss of power”).

d. In the loss of power setting, the system shall have automatic and manual operation. The manual operation would be provided in the event the automatic functions failed.

e. If the operator switches to curtailment:

f. Depressing a single push button in the automatic mode will start the engine, parallel with the utility, ramp the plant load onto the generator and open the utility breaker.

g. Depressing a second push button will ramp the load back to the utility and shut down the generators.

h. Provide a detailed sequence of operation for generator and switchgear operation.

i. Monitor temporary generator master control panel connect to DCS for monitoring.

N. Start Up and Testing

1. Specific Criteria

a. Provide factory test data.

b. Simulate and test all safety equipment. Using a reactive load bank (0.8PF) run the generator:

1) 15 minutes at idle speed

2) 30 minutes at 25% load

3) 30 minutes at 50% load

4) 60 minutes at 75% load

5) 120 minutes at 100% load

6) 15 minutes at 25% load

7) 15 minutes at 0% load (cool down) off record stator, bearing, oil, ambient, and water temperatures every 15 minutes.

c. Record speed, voltage and amperage at 15-minute intervals as well as just prior to and after a load change.

d. Demonstrate all warnings and shutdowns with laptop.

e. Hook up the generator to the main switchgear. Perform all automatic and manual functions a minimum of three times each. The plant will load the generators as much as possible. Particular attention should be observed to the larger starting loads. Record same parameters every 15 minutes and before and after changing load. Tests to be witnessed by HRSD Automotive Superintendent and HRSD Electrical Engineer or designee.

f. Create and attach to the switchgear detailed instructions. The instructions shall be laminated. The instructions shall be simple enough for anybody to pick them up and operate the diesel generator set.

g. Group A, B, and C phase cable together to cancel out EMF (Electromagnetic Field)

I. Energy Efficient Motors

1. Specific Criteria

a. See HRSD Electric Motor Specifications in *Exhibit E "HRSD Electric Motor Specifications".*

b. Provide ammeters on motors 50 HP & larger.

c. Local stop pushbuttons for VFDs, Use HOA for constant speed applications.

d. Add momentary push button at Motor.

J. Sump Pumps

1. Specific Criteria

a. Provide with 120-volt plug and receptacle. Refer to Treatment Plant/Miscellaneous Items.

K. Level Sensing Systems

1. Specific Criteria

a. Provide 4-20 mA signal.

1) See Treatment Plant No. 24

2) See Chemical Systems Plants

L. Bubbler Type – Level Sensing Systems

1. Specific Criteria

a. Complete purged air bubbler system with time delay for sensing wet well liquid level which generates and transmits level signals to control pump operations.

b. Provide UPS backup for controls.

c. Provide power light – white.

d. Provide a pressure sensing device (Foxboro or equal)

e. Provide externally mounted duplex air compressors mounted on 30-gallon horizontal receiving tank

f. Provide push button for manual purging of bubbler piping.

g. Provide manual alternation of air compressors.

h. Provide lead/lag switch – on off.

i. Provide panel mounted 4 ½ inch 0 level gauge/Analog gauge.

j. Mount air compressors outside of panel whenever possible

k. Provide pressure activated switches for point applications (Barksdale)

M. Ultrasonic – Level Sensing Systems

1. Manufacturers

a. Rosemont

b. Siemens

2. Specific Criteria

a. Microprocessor

b. FM approved (frequency modulation)

N. Capacitance – Level Sensing Systems (Not Acceptable)

1. Manufacturers

a. Warrick

b. Drexelbrook

2. Specific Criteria

a. Provide with point applications only.

b. Not for 4-20 ma applications

O. Pressure Transmitters – Level Sensing Systems

1. Manufacturers

a. Foxboro

b. Rosemount

c. Air Monitor – Incinerator draft

d. Siemens

2. Specific Criteria

a. All other locations

P. FloatBalls

1. Manufacturers

a. Flygt

b. Optifloat

2. Specific Criteria

a. Non mercury

b. Fiber Optic

Q. Pressure Sensing System – Level Sensing Systems

1. Specific Criteria

a. Provide either an Ashcroft or Red Valve (series 40) brand pressure seal with Viton boot.

b. Provide Ashcroft Gauges 100 psi.

c. Provide Foxboro IDPT 10 absolute pressure electronic transmitter.

d. See Standard Detail "Pressure Reducing Station Pressure Sensor Detail"

R. Diaphragm – Level Sensing Systems

1. Manufacturers

a. Foxboro

b. Rosemont

2. Specific Criteria

a. Pressure Transmitter (Diaphragm Type)

S. Radar – Level Sensing Systems

1. Manufacturers
    a. Rosemont
2. Specific Criteria
    a. Non-Contacting and Guided Wave types will be application dependent.

T. Variable Frequency Drives (VFDs)

1. Manufacturers
    a. Yaskawa
    b. Allen Bradley
2. Specific Criteria
    a. Install the equipment with the idea of keeping it clean and temperature regulated.
    b. Provide thumbscrews for removable/washable filters or thumb screws replaced by snap in grills that are removable from the front of the cabinet (reusable)
    c. Provide a programmable ramp time.
    d. Provide input reactors (MTE Corp) or TCI
    e. Pulse Width Modulated (PWM)
    f. Use IGBTs
    g. Automatic restart on power disruption
    h. Tune out a minimum of 3 frequencies.
    i. Hand/Off/Automatic (HOA) selector switch
    j. Manual speed control by potentiometer (door mounted) in addition to keypad control.
    k. Tune drive to motor with a harmonics meter
    l. Provide an input circuit breaker for short circuit protection (Fuses are not acceptable)
    m. The controller electronics shall contain indicators of the following conditions:
        1) Undervoltage
        2) Overvoltage
        3) Over temperature
        4) Memory failure
        5) Emergency Stop

6) Ground fault

7) Instantaneous overcurrent

n. Provide a NEMA 12 flanged disconnect free standing enclosure.

o. Provide auxiliary run contactor wired to run command for ventilation fan.

p. Mount the resets & appropriate indicator lighting on the front of the drive or the outside of the box to prevent employees from opening the panel.

q. Provide four contact outputs for run status, power failure, VFD failure, not in auto status.

r. The following are site specific options:

1) VFD must be able to be isolated and bypassed (auto/manual operation) allowing the motor to operate across the line at full-load speed and current. Site specific

2) Provide manual isolation and bypass capability.

3) Provide three contactors for bypass operation.

s. VFD “T” leads in free air shall be run in RGS or PVC coated RGS.

t. “T” leads can be run in PVC if in a duct bank.

u. Do not run “T” leads in conduit with any other conductors.

v. “T” leads shall be run in a separate conduit per each drive.

w. 6 pulse drive or Matrix drive or AB 755T

3. Additional Design Considerations

a. All electrical components must be NEMA only. IEC or NEMS/IEC is not acceptable.

b. Filters to HVAC units must be maintained and free from dust during construction phase.

c. VFD parameters must be included on as built prints (i.e., momentary power loss ride thru, energy savings, and fault reset)

d. Specify coil locks (Power Quality Solutions) on control relays for power dip ride thru capabilities.

e. Specify Baker SKF EP 1000 Dynamic motor link on all motor/VFD system 100HP and above or designated as critical equipment.

f. Provide Bypass mode for critical VFD’s. Soft start or across the line depending on application.

g. Specify main circuit breaker cable operators for breaker operation instead of standard door operating mechanisms.

h. Provide One reset button to reset VFD and control circuit faults.

i. Provide finger safe barriers for main sideline breaker lugs.

j. Provide enough fans to replace each fan within a VFD (spare parts) where several VFD's of the same size and model are specified.

k. Provide paper copies of VFD manuals.

l. To support large and heavy VFD's 60 HP and above, provide a pedestal with a flat plate mounted inside the enclosure for VFD to rest for easy removal. Also provide a lift table to remove VFD.

m. Provide external air filter for easy access on cabinets.

n. VFD shall be sized to provide current necessary for motor to produce continuous rated horsepower and service factor horsepower at highest carrier frequency.

o. Contractor to perform static tuning for optimal performance during startup. Contractor to supply panel shop with motor data sheets including the number of poles per motor. Also, include number of motor poles on motor nameplate.

p. Provide extended warranty by VFD manufacturer where replacement cost is justified.

q. Need all switches to indicate when not in auto.

r. Need indication when control power is loss in addition to VFD fault.

s. Evaluate best routing method for bottom versus top entry of wire.

t. Provide VFD Cable with copper shielding, XLPE insulation manufacture by Belden or equal.

   1) Consider these factors when designing motor HP, motor voltage and motor full load current, ambient temperature, VFD cable and connector ratings, and number of cables in raceway.

u. A Harmonic Study Analysis should be performed for all VFD applications by using IEE 519 guidelines. The design engineer should evaluate the best solution to reduce Harmonic Distortion (ie. passive and active filters or active front end included as part of the VFD) (refer to Exhibit C)

Provide auxiliary (AUX) to remove run command of VFD before opening contact.

Refer to Disconnect – Aux Contact

IV. Item No. 4

A. Energy Efficient Motors

1. Specific Criteria
    a. See HRSD Electric Motor Specifications in *Exhibit E "HRSD Electric Motor Specifications".*
    b. Provide ammeters on motors 50 HP & larger.
    c. Local stop pushbuttons for VFDs, Use HOA for constant speed applications.
    d. Add momentary push button at Motor.

V. Item No. 5

A. Sump Pumps

1. Specific Criteria
    a. Provide with 120-volt plug and receptacle. Refer to Treatment Plant/Miscellaneous Items.

VI. Item No. 6

A. Level Sensing Systems

1. Specific Criteria
    a. Provide 4-20 mA signal.
        1) See Treatment Plant No. 24
        2) See Chemical Systems Plants

B. Bubbler Type – Level Sensing Systems

1. Specific Criteria
    a. Complete purged air bubbler system with time delay for sensing wet well liquid level which generates and transmits level signals to control pump operations.
    b. Provide UPS backup for controls.
    c. Provide power light – white.
    d. Provide a pressure sensing device (Foxboro or equal)
    e. Provide externally mounted duplex air compressors mounted on 30-gallon horizontal receiving tank
    f. Provide push button for manual purging of bubbler piping.
    g. Provide manual alternation of air compressors.
    h. Provide lead/lag switch – on off.

i. Provide panel mounted 4 ½ inch 0 level gauge/Analog gauge.

j. Mount air compressors outside of panel whenever possible

k. Provide pressure activated switches for point applications (Barksdale)

C. Ultrasonic – Level Sensing Systems

1. Manufacturers

a. Rosemont

b. Siemens

2. Specific Criteria

a. Microprocessor

b. FM approved (frequency modulation)

D. Capacitance – Level Sensing Systems (Not Acceptable)

1. Manufacturers

a. Warrick

b. Drexelbrook

2. Specific Criteria

a. Provide with point applications only.

b. Not for 4-20 ma applications

E. Pressure Transmitters – Level Sensing Systems

1. Manufacturers

a. Foxboro

b. Rosemount

c. Air Monitor – Incinerator draft

d. Siemens

2. Specific Criteria

a. All other locations

F. FloatBalls

1. Manufacturers

a. Flygt

b. Optifloat

2. Specific Criteria

a. Non mercury

b. Fiber Optic

G. Pressure Sensing System – Level Sensing Systems

1. Specific Criteria

a. Provide either an Ashcroft or Red Valve (series 40) brand pressure seal with Viton boot.

b. Provide Ashcroft Gauges 100 psi.

c. Provide Foxboro IDPT 10 absolute pressure electronic transmitter.

d. See Standard Detail "Pressure Reducing Station Pressure Sensor Detail"

H. Diaphragm – Level Sensing Systems

1. Manufacturers

a. Foxboro

b. Rosemont

2. Specific Criteria

a. Pressure Transmitter (Diaphragm Type)

I. Radar – Level Sensing Systems

1. Manufacturers

a. Rosemont

2. Specific Criteria

a. Non-Contacting and Guided Wave types will be application dependent.

VII. Item No. 7

A. Variable Frequency Drives (VFDs)

1. Manufacturers

a. Yaskawa

b. Allen Bradley

2. Specific Criteria

a. Install the equipment with the idea of keeping it clean and temperature regulated.

b. Provide thumbscrews for removable/washable filters or thumb screws replaced by snap in grills that are removable from the front of the cabinet (reusable)

c. Provide a programmable ramp time.

d. Provide input reactors (MTE Corp) or TCI

e. Pulse Width Modulated (PWM)

f. Use IGBTs

g. Automatic restart on power disruption

h. Tune out a minimum of 3 frequencies.

i. Hand/Off/Automatic (HOA) selector switch

j. Manual speed control by potentiometer (door mounted) in addition to keypad control.

k. Tune drive to motor with a harmonics meter

l. Provide an input circuit breaker for short circuit protection (Fuses are not acceptable)

m. The controller electronics shall contain indicators of the following conditions:

   1) Undervoltage

   2) Overvoltage

   3) Over temperature

   4) Memory failure

   5) Emergency Stop

   6) Ground fault

   7) Instantaneous overcurrent

n. Provide a NEMA 12 flanged disconnect free standing enclosure.

o. Provide auxiliary run contactor wired to run command for ventilation fan.

p. Mount the resets & appropriate indicator lighting on the front of the drive or the outside of the box to prevent employees from opening the panel.

q. Provide four contact outputs for run status, power failure, VFD failure, not in auto status.

r. The following are site specific options:

   1) VFD must be able to be isolated and bypassed (auto/manual operation) allowing the motor to operate across the line at full-load speed and current. Site specific

   2) Provide manual isolation and bypass capability.

   3) Provide three contactors for bypass operation.

s. VFD “T” leads in free air shall be run in RGS or PVC coated RGS.

t. “T” leads can be run in PVC if in a duct bank.

u. Do not run “T” leads in conduit with any other conductors.

v. “T” leads shall be run in a separate conduit per each drive.

w. 6 pulse drive or Matrix drive or AB 755T

3. Additional Design Considerations

a. All electrical components must be NEMA only. IEC or NEMS/IEC is not acceptable.

b. Filters to HVAC units must be maintained and free from dust during construction phase.

c. VFD parameters must be included on as built prints (i.e., momentary power loss ride thru, energy savings, and fault reset)

d. Specify coil locks (Power Quality Solutions) on control relays for power dip ride thru capabilities.

e. Specify Baker SKF EP 1000 Dynamic motor link on all motor/VFD system 100HP and above or designated as critical equipment.

f. Provide Bypass mode for critical VFD’s. Soft start or across the line depending on application.

g. Specify main circuit breaker cable operators for breaker operation instead of standard door operating mechanisms.

h. Provide One reset button to reset VFD and control circuit faults.

i. Provide finger safe barriers for main sideline breaker lugs.

j. Provide enough fans to replace each fan within a VFD (spare parts) where several VFD’s of the same size and model are specified.

k. Provide paper copies of VFD manuals.

l. To support large and heavy VFD’s 60 HP and above, provide a pedestal with a flat plate mounted inside the enclosure for VFD to rest for easy removal. Also provide a lift table to remove VFD.

m. Provide external air filter for easy access on cabinets.

n. VFD shall be sized to provide current necessary for motor to produce continuous rated horsepower and service factor horsepower at highest carrier frequency.

o. Contractor to perform static tuning for optimal performance during startup. Contractor to supply panel shop with motor data sheets including the number of poles per motor. Also, include number of motor poles on motor nameplate.

p. Provide extended warranty by VFD manufacturer where replacement cost is justified.

q. Need all switches to indicate when not in auto.

r. Need indication when control power is loss in addition to VFD fault.

s. Evaluate best routing method for bottom versus top entry of wire.

t. Provide VFD Cable with copper shielding, XLPE insulation manufacture by Belden or equal.

1) Consider these factors when designing motor HP, motor voltage and motor full load current, ambient temperature, VFD cable and connector ratings, and number of cables in raceway.

u. A Harmonic Study Analysis should be performed for all VFD applications by using IEE 519 guidelines. The design engineer should evaluate the best solution to reduce Harmonic Distortion (ie. passive and active filters or active front end included as part of the VFD) (refer to Exhibit C)

Provide auxiliary (AUX) to remove run command of VFD before opening contact.

Refer to Disconnect – Aux Contact

B. DC Drives

1. Specific Criteria

a. Unacceptable

C. Eddy Current Brake Systems

1. Specific Criteria

a. Unacceptable

D. DC Drives

1. Specific Criteria

a. Unacceptable

E. Eddy Current Brake Systems

1. Specific Criteria

a. Unacceptable

VIII. Item No. 8

A. Metering Packages for Switchgear

1. Manufacturers

a. Schweitzer Engineering Lab (SEL)

b. Xpert (Eaton)

c. Power Logic (Square D)

d. Multilin (GE)

2. Specific Criteria

a. Provide cumulative watt-hour meters on each MCC, or specific motor

b. Provide a meter on each MCC to indicate 3 phase parameters on the MCC, i.e., volts, amps, kW, PF, kVA, kWh, etc.

c. Provide with motors 200 HP and above.

IX. Item No. 9

A. PLCs

1. Manufacturers

a. Allen Bradley (i.e. –SLC 500, Compact Logix 5000, Micro Logix 5000)

2. Specific Criteria

a. Provide functional descriptions, the application program, the job- specific program data, and a copy of the as-built software documentation

b. Include PLC fail indicator.

c. Provide license, software, programmed files with labels (as Built)

d. PLC's and RTU's shall be equipped with isolation relays for all digital inputs. Ex- ample: (Idec 5-blade – 24 VDC coils- with a form C configuration contactor) relays mounted on DIN rail for the purpose isolating relay inputs. Whether a junction box is used or control panel a 24 VDC power supply with sufficient capacity to energize all the 24 VDC relay coils simultaneously when necessary for all PLC or RTU inputs.

X. Item No. 10

A. Exhaust Fans

1. Manufacturers

a. ILG

b. Dayton

c. Greenheck

d. Airovent

e. Mk Plastics

2. Specific Criteria

a. Corrosion resistant including hardware.

b. Must be explosion proof in hazardous areas.

c. Direct Drive

1) Belt drive not acceptable unless approved by Owner (Air detection is required if approved).

XI. Item No. 11

B. Lighting

1. Manufacturers

a. Holophane

b. Hubbell

c. Thomas

d. Crouse-Hinds

2. Specific Criteria

a. Replace all light fixtures with LEDs if Non-LED style fixture cannot be repaired.

b. Provide proper levels of lighting over major equipment including switchgear, generators, pump motors, and controls. Minimum lighting levels should conform to the IES lighting handbook.

c. Exterior lights shall be placed on a single photocell (within reason)

Refer to Exhibit D - Lighting Policy

3. Other

a. HPS

1) Specific Criteria

i. Not acceptable for any application

b. LPS

1) Specific Criteria

i. Not acceptable for any application

c. Mercury Vapor

1) Specific Criteria

i. Not acceptable for any application

d. Emergency Lighting

1) Manufacturers

i. Dual Lite

ii. Emergency Lite

Note: Install dual input inverters if applicable

2) Specific Criteria

i. Dual Lite GMM-EL-W2 in admin areas

ii. Emerg Lite PRO-2 in corrosive areas

e. Exit Lighting

1) Manufacturers

i. Dual Lite

ii. Lithonia

2) Specific Criteria

i. Highly visible 24 hours/day for life (self-illuminating)

ii. Provide lighted only if required.

f. High-Mast Lighting

1) Manufacturers

i. Holophane

2) Specific Criteria

i. Site specific

g. LED

1) Specific Criteria

i. To reduce maintenance

ii. Perform payback analysis.

XII. Item No. 12

A. Concrete Housekeeping Pads

1. Specific Criteria

a. Provide a minimum of 4-inch thickness under Switchgear, MCCs, transformers, general electrical equipment, and around conduits at floor penetrations.

b. Chamfer all edges.

XIII. Item No. 13

A. Conduit and Conduit Systems

1. Specific Criteria
    a. Provide three separate conduit systems. One for power circuits >600 volts, one for power circuits less than 600 volts, and one for communication circuits
    b. Instrumentation (<25v) can be placed in the communication duct bank.
    c. Use compression type lugs only.
    d. Ream and chamfer all edges.
    e. EMT or IMC are not acceptable unless approved by Owner.
    f. All flexible conduits shall be heavy duty metallic liquidtite or equal.
    g. Provide ¾ inch minimum size (when specifically approved or when instrumentation restricts this size, ½ inch can be used)
    h. Do not use plastic anchors.
    i. Seal conduits with a silicone product as necessary (in the manholes to the buildings)
    j. Administrative areas (plenum) can use EMT down to ½ inch (lighting only)
    k. Label all conduits inside of building (Engineer must provide conduit schedule)
    l. Circuit # must be brought back to the panel/breaker.
    m. Place metal tags on cables in manholes
    n. See the Miscellaneous section of these standards for markings and coatings.
    o. Provide Oz Gedney conduit and cable seals or silicone where seals are not available.
    p. Cable trays are not acceptable unless approved by Owner.
    q. Evaluate cost of stainless steel or aluminum conduit vs. PVC coated rigid steel conduit (where applicable)

B. Spare Conduits
    1. Specific Criteria
        a. Provide with service entrance.
        b. Add appropriate spares with pull wires.

C. Future Conduits
    1. Specific Criteria
        a. Some future conduits may become trip hazards, they must be cut flush

and grouted at the finish floor in some cases.

D. PVC Coated Rigid Steel (inside and out)

1. Manufacturers

a. Robroy

b. Plasti-Bond

c. Perma-cote

d. Korkap

e. Ocal

f. Gafco Industries

2. Specific Criteria

a. Provide in corrosive areas, underground (not encased), chemical areas, chemical containment areas, outside and damp areas.

b. Provide with PVC coated fittings, boxes and touch-up material.

c. Provide 8” of PVC coated conduit were stubbed up through concrete (wash-down areas)

E. PVC

1. Specific Criteria

a. Underground/encased reinforced concrete.

b. Can replace RGS in duct banks where EMI is not a threat.

F. Rigid Galvanized Steel

1. Specific Criteria

a. Provide in all other areas not covered by PVC and PVC coated.

G. Tools Used

1. Specific Criteria

a. Use suitable tools with conduit.

H. Patching/Repair

1. Specific Criteria

a. Use appropriate material to patch and repair.

I. Flex – Liquidtite & Fittings

1. Specific Criteria

a. Use Myers hubs where suitable.

b. Use coated fittings where appropriate.

c. Heavy duty metallic fittings require.

d. Shall be metallic stainless steel, aluminum or equal.

J. Explosion Proof Fittings

1. Manufacturers

a. Crouse Hinds

b. Appleton

2. Specific Criteria

a. Use fittings to match installed conduit.

K. Fixtures & Fittings

1. Specific Criteria

a. Use appropriate fittings and materials.

L. Struts and Straps

1. Specific Criteria

a. To suit conduit materials

b. Use matching fasteners.

c. In outside, wet or damp areas use stainless steel fasteners.

M. Pull Boxes (wire pulled through) and Junction Boxes (wires terminated inside)

1. Specific Criteria

a. Over 6-inch x 6 inch are to be hinged

b. Gasketed

c. Use stainless steel/aluminum in outside/wet areas.

d. Use PVC coated reinforced fiberglass in hazardous and chemical areas.

N. Wire Hangers

1. Specific Criteria

a. Appropriately locate above dropped ceilings.

O. Red Dye

1. Specific Criteria

a. Provide red dye in concrete duct bank.

b. 4000 psi

c. See typical duct bank details in Exhibit J

XIV. Item No. 14

A. Wire

1. Specific Criteria

   a. Provide copper stranded wire only.

   b. Provide for separation of power, signal and telephone services.

   c. Do not splice wire - Splicing not allowed unless approved by Owner/Engineer

   d. Use compression type lugs only.

   e. Place metal tags on cables in manholes

   f. Welding cable (DLO) – Design based on intermittent duty vs. continuous duty.

   g. Provide Ethernet cable/CAT 6 for communications to equipment.

B. Telephone – Wire

1. Specific Criteria

   a. Minimum wire gauge #22-24 AWG

   b. Provide plenum rated cable in return air plenums.

C. THHN, THWN, XHHW – Wire

1. Specific Criteria

   a. Follow NEC color coding.

   b. All shall be stranded wire, rated for 600-volt.

   c. #12 minimum wire size for typical applications

D. Instrumentation – Wire

1. Specific Criteria

   a. All wire MTW or signal wire shall be rated at 600-volt.

   b. Do not combine analog circuits (twisted shielded pair-TSP) with other circuits in the same conduit.

   c. Instrumentation control wires should be sized accordingly (#16 stranded wire recommended)

   d. DC wire shall be color-coded blue #16 AWG minimum.

   e. AC wire shall be color-coded red #16 AWG minimum.

   f. Unless otherwise specified by the manufacturer, provide analog signals with #18-2 AWG with a shield, tinned

   Note: Cabinets with multiple sources must be clearly marked as such

E. High Voltage Cable – Wire

1. Specific Criteria

a. Follow appropriate code.

F. Heat Tracing – Wire

1. Manufacturers

a. Letco-Dual Controls

b. Chromalox

2. Specific Criteria

a. Provide terminations above the insulation.

b. Provide thermostatically controlled constant watt tracing.

c. Provide with insulation.

d. Provide with protective outer coating.

e. Provide a metal strip on PVC pipe to distribute heat.

f. Provide with indicator light.

g. Provide with stainless steel leads in corrosive areas.

h. Provide coating for chemically corrosive areas.

XV. Item No. 15 - Relays

A. Industrial

1. Manufacturers

a. Allen Bradley

b. Eaton

2. Specific Criteria

a. Fixed base

B. Electronic

1. Manufacturers

a. IDEC

b. Potter-Brumfield

c. Agastat

2. Specific Criteria

a. Plug-in/ice cube type with pilot lights

XVI. Item No. 16

A. Lockout / Tagout → Safety

1. Specific Criteria

a. Provided for in Section 22 – HRSD Safety Program in this manual. Provide local lockout devices for all equipment.

XVII. Item No. 17

A. Switches / Receptacles / Plugs

1. Manufacturers

a. Pass & Seymour

b. Hubbell

c. Crouse Hinds

2. Specific Criteria

a. Provide compression type screw terminals on receptacles. Wire binding receptacles or switches are not acceptable.

b. Provide for dedicated circuits for sump pumps.

c. Provide power receptacle in control cabinets.

d. Provide a neutral for each circuit, multi wire circuits are not allowed without special approval and then with a two-pole breaker.

e. Provide "in use" covers for indoor sump area applications.

XVIII. Item No. 18 – Unit Heaters

A. Unit Heaters - Electric

1. Manufacturers

a. QMark

b. Dayton

2. Unit Heaters – Gas

a. Space Ray

b. Dayton

XIX. Item No. 19

A. Electrical Drawings

1. Specific Criteria

a. Process and Instrumentation Diagrams (P&IDs) are to conform to ISA modified standards (Consulting engineer to provide)

b. Provide functional descriptions with the P&IDs (Consulting engineer to provide)

c. Provide Point-to-Point connection drawings. Contractor shall develop.

d. Review and approval by the engineer shall be prior to installation.

e. Label all conduits inside building.

f. Place metal tags on cables in manholes

g. Provide final conduit & cable schedule on disk (AutoCAD, PDF & VISIO)

XX. Item No. 20

A. Safety Switches (fused or unfused)

1. Manufacturers

a. Square D

b. Eaton

c. Westinghouse

d. Allen Bradley

2. Specific Criteria

a. Light duty safety switches are unacceptable.

b. Must be pad lockable.

xxi. Item No. 21 - Transformers

A. Dry Transformers

1. Manufacturers

a. Square D

b. Eaton

c. GE

d. ACME

2. Specific Criteria

a. No Aluminum Wire

b. Provide 220° C insulation system for 15kVA and larger.

c. Provide 180° C insulation system for transformers less than 15kVA.

d. Transformers shall handle a 15% overload without exceeding the insulation rating.

e. Place on 4” housekeeping pads

B. Oil Filled Transformers

1. Manufacturers

a. Square D

b. Eaton

c. GE

2. Specific Criteria

a. No PCBs allowed.

b. Provide with FR3 oil.

c. Provide housekeeping pad – elevate pad in places prone for flooding.

d. Require external sample ports.

XXII. Item No. 22

A. Metering Vaults/Pits

1. Specific Criteria

a. Provide receptacle and receptacle location per HRSD direction.

b. Provide sump pumps as needed with remote GFCI circuit breaker protection.

c. Provide explosion proof sump pump in Class 1 division 1 areas.

B. Other Metering Vaults/Pits

1. Power Requirements

a. Specific Criteria

i. Provide two receptacles with weatherproof covers with remote GFCI circuit breaker protection

2. Exhaust Fans

a. See Exhaust Fans

b. Size for 12 air changes per hour (minimum)

c. Bring exhaust duct to within 6 inches above finished floor.

3. Lighting

a. Provide incandescent lighting with a vapor tight glove and guard.

b. Provide light switch at access.

XXIII. Item No. 23

A. Pressure Sustaining/Regulating Valves

1. Manufacturers

a. KTM

b. Foxboro

c. Clow

2. Specific Criteria

a. Provide 4-20 mA operated valves. Do not use pulsed control valves.

b. Automatic Controls of Virginia or Valve Automation for actuator applications

c. Use EIM /Bettis actuators.

d. Limitorque (refer to Exhibit P)

B. Other

1. Butterfly Valves

2. V Notch Plug Valves

3. V Notch Ball Valves

XXIV. Item No. 24

A. Flow Meters – Size for average flows

1. Parshall flume

a. Specific Criteria

i. Use ultrasonic level indicator (Siemens)

2. Magnetic

a. Manufacturers

i. Rosemont

ii. Foxboro

b. Specific Criteria

i. Use for control or billing applications.

ii. Ensure vendor is clear on application.

iii. Provide with remote head, display and keyboard.

3. Ultrasonics (strap on)

a. Manufacturers

i. Fuji

ii. Flexim (refer to Exhibit O)

iii. Pulsar

b. Specific Criteria

4. Ultrasonics level
    a. Manufacturers
        i. Siemens
        ii. Rosemount
5. Insertion (mass flow)
    a. Manufacturers
        i. Magnetrol
        ii. Sierra
        iii. Kurz
    b. Specific Criteria
        i. Air
6. Venturi
    a. Specific Criteria
        i. Generally, not used in most applications.
        ii. Do not use for control.

XXV. Item No. 25

A. RTUs (Remote Terminal Unit)

1. Manufacturers
    a. Allen Bradley
    b. Emerson-Control Wave
    c. Emerson-OCC100
2. Specific Criteria
    a. HRSD shall provide.
    b. Physical size 24”x24”x8” in a NEMA 4x enclosure
    c. Physical size 12”x12”x8” in a NEMA 4x enclosure

XXVI. Item No. 26

A. Louvers/Dampers

1. Manufacturers
    a. Greenheck
    b. Ruskin
2. Specific Criteria

a. Provide gravity dampers for all applications.

b. See Emergency Generators

XXVII. Item No. 27

A. Transfer Switches

1. Manufacturers

a. Eaton

b. Square D

c. ASCO

2. Specific Criteria

a. Nema 12 Enclosure unless required otherwise.

b. IQ Plus Monitoring Device

c. Provide BUS status (A or B) to the DCS

d. Zenith transfer switches are not acceptable.

XXVIII. Item No. 28

A. On-Line Vibration Monitors

1. Manufacturers

a. Bentley-Nevada

2. Specific Criteria

a. Application specific

XXIX. Item No. 29

A. Panel Meters

1. Analog

a. Manufacturers

i. GE/Yokogawa

ii. Simpson

2. Digital

a. Manufacturers

i. Yokogawa

ii. Red Lion

iii. Simpson

3. Elapsed Time

a. Manufacturers
    i. Crompton
    ii. ENB
    iii. Yokogawa
b. Specific Criteria
    i. Non resettable / resettable (plant site specific)

4. Pulse Counters
    a. Manufacturers
        i. Acromag
        ii. Omron
5. Isolators
    a. Manufacturers
        i. Acromag
        ii. AGMPhoenix
    b. Specific Criteria
        i. Isolate 4-20 MA and 1–5-volt signals
        ii. Powered 4-20 MA isolator splitter.
        iii. Terminal relay
        iv. Compact panel temp sensor 4-20 MA
6. Signal Converters
    a. Manufacturers
        i. AGM
        ii. RIS
        iii. Acromag
    b. Specific Criteria
        i. Isolate 4-20 MA and digital.
7. Surge Protectors
    a. Manufacturers
        i. Phoenix
        ii. MTL-Crouse Hinds
    b. Specific Criteria

i. Provide 120v AC power supply surge protectors.

XXX. Item No. 30

A. Analyzers/Monitors: Safety / Gas

1. Combustible LEL

a. Manufacturers

i. Detronics

ii. MSA

2. O2

a. Manufacturers

i. Detronics

ii. MSA

3. SO2

a. Manufacturers

i. Detronics

ii. Bisulfite

4. H2S

a. Manufacturers

i. Detronics

b. Specific Criteria

i. ATI is not used for Safety.

B. Analyzers/Monitors: Process

1. pH

a. Manufacturers

i. Foxboro

ii. E&H Memosens CPS16D pH probe (Incinerator scrubber water process) (Site Specific/Specific applications)

iii. M4 Knick (Site Specific/Specific applications)

2. ORP

a. Manufacturers

i. Foxboro

b. Specific Criteria

i. Provide only.

ii. Stanco not acceptable

3. O2 (Incinerator)

a. Manufacturers

i. COSA

b. Specific Criteria

i. Provide only.

ii. Operating temperature >1500°F

4. DO

a. Manufacturers

i. Hach

ii. Insite

b. Specific Criteria

i. Optica

5. CL2

a. Manufacturers

i. Rosemount

ii. Prominent

iii. Chemtrac

6. H2S

a. Manufacturers

i. ATI

7. Conductivity

a. Manufacturers

i. Hach

XXXI. Item No. 31

A. Miscellaneous Instrumentation

1. PID Controllers

a. Manufacturers

i. Emerson Ovation

2. Electric Actuators

a. Manufacturers

i. EIM/Bettis

ii. Limitorque (refer to Exhibit P)

Note: Verify hazardous classification for small 120V actuators.

b. Specific Criteria

i. 120 volts and 480 volts AC

3. Burner Actuators

a. Manufacturers

i. Honeywell

ii. Barber Coleman

4. Alarm Panel

a. Manufacturers

i. Ronan

5. Temperature Controllers

a. Manufacturers

i. Yokogawa

XXXII. Item No. 32

A. Miscellaneous Electrical

1. Electrical Equipment Testing

a. Specific Criteria

i. Provide testing in off-peak hours or switch off an equivalent amount of load prior to testing.

2. One Line Diagram

a. Specific Criteria

i. Provide an update to the one-line diagram with significant changes in the electrical system.

3. Thermographic Inspection

a. Specific Criteria

i. Provide a thermographic inspection of the new systems upon completion.

4. Coordination Study/Short Circuit/Arc Flash

a. Specific Criteria

i. Provide a coordination study short circuit, coordination, and arc flash

analysis for new systems or systems with significant changes.

ii. The short-circuit calculations and the corresponding incident energy calculations for multiple system scenarios must be compared and the greatest incident energy must be uniquely reported for each equipment location. Calculations must be performed to represent the maximum and minimum contributions of fault current magnitude for all normal and emergency operating conditions. The minimum calculation will assume that the utility contribution is at a minimum and will assume a minimum motor contribution (all motors off). Conversely, the maximum calculation will assume a maximum contribution from the utility and will assume the maximum number of motors to be operating. Calculations shall take into consideration the parallel operation of synchronous generators with the electric utility, where applicable. Include Arc flash analysis results for generator protective device.

iii. Contractor must adhere to NFPA 70E Electrical Safety requirements when working on electrical equipment in HRSD facilities.

iv. Engineer must design electrical systems in accordance with NFPA 70E.

Refer to Exhibit A

XXXIII. Item No. 33

A. Heating and Cooling

1. Manufacturers

a. Honeywell

b. Barber Coleman

2. Specific Criteria

a. Louver actuators to be used with building heating/ventilation systems.

XXXIV. Item No. 34

A. Junction/Pull Boxes and Miscellaneous Enclosures

1. Manufacturers

a. Hoffman

b. Saginaw

c. Hammond

2. Specific Criteria

a. Provide PVC coated boxes and/or fittings when using with PVC coated conduit.

B. Administrative Areas

1. Manufacturers

   a. Hoffman

   b. Saginaw

   c. Hammond

2. Specific Criteria

   a. NEMA 4

C. Inside

1. Specific Criteria

   a. Stainless steel, fiberglass reinforced plastic (FRP), steel, NEMA 4

D. Outside

1. Specific Criteria

   a. Stainless steel, NEMA 4x with Myers hubs

E. Wet

1. Specific Criteria

   a. Use with PVC coated conduit and PVC coated hubs.

   b. Stainless steel, fiberglass reinforced plastic, NEMA 4x with watertight fittings (Myers).

XXXV. Item No. 35

A. Panel Boards/Control Panels

1. Manufacturers

   a. Eaton

   b. Square D

   c. Siemens

   d. GE

2. Specific Criteria

   a. Provide PVC coated boxes and/or fittings when using with PVC coated conduit.

   b. Provide with tin-plated copper bus.

   c. Provide 25% spares minimum.

   d. Provide bolt in breakers.

   e. Do not provide cans with pre-stamped knockouts.

f. Provide with hinged panel cover with a latching door.

g. Provide heavy duty, industrial grade panel boards.

h. Breaker operator should be outside of panel.

i. Breaker should be located inside of panel.

j. HOA switches should be on the outside of panel.

k. Provide dead front hinged panel.

l. Provide LED work light, if warranted

XXXVI. Item No. 36

A. Distributed Control System (DCS)

1. Manufacturers

a. Emerson

2. Specific Criteria

a. Provide fail safe condition within the DCS located in the marshalling cabinet terminal strips.

b. Contact in the field must be wired to a normally closed contact in the energized position. When fault occurs, the contact will open and be displayed as a system failure. This prevents contacts which do not close properly to indicate a fault to the system. A digital status that equals 1 (one) indicates a closed contact and a 0 (zero) indicates an open contact. An open contact occurs when a fault occurs (fail open).

c. DCS DCU's and RIO's shall be equipped with isolation relay junction box(s) (interposing relays) adjacent to all the DCU's and RIO's. The junction box shall contain ample room to house relays; Example: (Idec 5-blade – 24 VDC coils-with a form C configuration contactor) relays mounted on DIN rail for the purpose isolating relay junction box. This junction shall be equipped with a 24 VDC power supply with sufficient capacity to energize all the 24 VDC relay coils simultaneously when necessary for all DCS inputs.

Note: The following HRSD design standards shall be adhered to colors for graphical screens, graphics design, and control functionality. The current HRSD DCS standards are maintained by Industrial Automation within the E&I division. These standards are available upon request.

XXXVII. Item No. 37 - Lightning Protection Refer to NFPA 820 and NFPA 780. - Lightning Protection applications will be site specific (Discuss with HRSD Electrical Staff).

XXXVIII. Item No. 38 - SWIFT (*Refer to Exhibit I*)

XXXIX. Item No. 39 - Dominion Energy Coordination (refer to Exhibit K)

A. Easements

1. It is imperative that the design engineer contacts the utility company (i.e., Dominion Energy, Rappahannock Power, Prince George Electric Cooperative, etc.) to determine the responsible territory.
2. Design Engineer and HRSD should inquire with the utility company if single phase or 3-phase power is available at the proposed site.
3. Design Engineer should incorporate right-of-way (ROW), multi-use utility easements, identify property owners, and VDOT requirements as part of the preliminary engineering report (PER) to prevent delays and cost increase during the construction phase of the project. The items listed above should be explored in advance especially in rural communities where 3-phase electrical service is not available.
4. See Exhibit K for Dominion Project Workflow Brochure "HRSD Interface on New Projects with Dominion Energy Virginia (DEV)

XL. Item No. 40

A. Grounding

"50.53 Grounding Electrode System Installation.

(A) Rod, Pipe, and Plate Electrodes. Rod, pipe, and plate electrodes shall meet the requirements of 250.53(A)(1) through (A)(3).

(1) Below Permanent Moisture Level. If practicable, rod, pipe, and plate electrodes shall be embedded below permanent moisture level. Rod, pipe, and plate electrodes shall be free from nonconductive coatings such as paint or enamel.

(2) Supplemental Electrode Required. A single rod, pipe, or plate electrode shall be supplemented by an additional electrode of a type specified in 250.52(A)(2) through (A)(8). The supplemental electrode shall be permitted to be bonded to one of the following:

(1) Rod, pipe, or plate electrode

(2) Grounding electrode conductor

(3) Grounded service-entrance conductor

(4) Nonflexible grounded service raceway

(5) Any grounded service enclosure

Exception: If a single rod, pipe, or plate grounding electrode has a resistance to earth of 25 ohms or less, the supplemental electrode shall

not be required.

(3) Supplemental Electrode. If multiple rod, pipe, or plate electrodes are installed to meet the requirements of this section, they shall not be less than 1.8 m (6 ft) apart."

XLI. Item No. 41 - Building Classification

"1. Purpose to provide explosion and fire protection for life property, and operations.

2. Reduce or mitigate the effects of fire or explosion

3. Consult with AHJ (Authority Having Jurisdiction) to ensure that the NFPA 820 standard will be enforced.

NFPA 70 – Article 500

Class I: Flammable Gases/Vapors

Class II: Combustible Dust

Class III: Ignitable Fibers

Wastewater/Treatment/Collections Systems

Class I, Div 1 or 2, Group D (Methane)

Class I, Div 1 or 2, Group G (Sludge)

Wet Well Pump Station

Less than 12 air changes – Division 1

Greater than 12 air changes – Division 2

Typical classified areas: Barscreen, Headworks or Preliminary Treatment Facility, Grit Removal, Odor Control, Sludge Handling and Thickening, etc.

Evaluate equipment type (i.e., explosion proof, conduit seals, etc.)

NFPA 820 4.2.2 – Collections Systems – See Exhibit Y

NFPA 820 5.2.2 – Liquid Streaming – See Exhibit Z

Consideration requirements: exhaust fans, continuous ventilation, alarming, air flow and monitoring."

XLII. Item No. 42 – Standard Details

A. PLC Control Wave – Temp Pump Enclosure Detail and Pump Run Status PS Schematic– See Exhibit S

B. Antenna Installation Detail - See Exhibit T

C. Wet Well Installation Detail – See Exhibit U

D. Intrinsic Safety Panel Wiring Diagram – See Exhibit V

E. Power Wiring Junction Box Detail– See Exhibit W

F. Vault Plans – See Exhibit X

XLIII. Item No. 42 - Air Purification – Hydrogen Sulfide (H2S) Mitigation for Electrical Room - See Exhibit AA

A. Manufacturer

1. Pure Air or approved equal.

I. Strategic Automation Configuration

A. Refer to Exhibit R

Click here to return to Switchgear and MCCs (PSs)

Click here to return to Switchgear (TPs)

Click here to return to Misc. Electrical (PSs)

Click here to return to Misc. Electrical (TPs)

Exhibit A

HDR | ONE COMPANY *Many Solutions*℠

Meeting Notes

Subject:	Arc Flash Mitigation Planning Workshop		
Client:	HRSD		
Project:	Arc Flash Mitigation Workshops	Project No:	214032
Meeting Date:	July 9-10, 2013	Meeting Location:	HRSD South Shore Operations Center, Atlantic Conference Room
Notes by:	B. M'Coy		

Attendees:

HRSD

Sherman Pressey	Tim Marsh	Stan Saunders
Carolyn Cagle	Stephanie Laughinghouse	Lee Inman
John Haymore	Ryan Duke	Kelly Lamp
Jennifer See	Mardane McLemore	Rick Raike

HDR

Gary Useldinger	Natalie Wieszek
Bill M'Coy	Kevin Thernes

Notes:

Primary HRSD Arc Flash Hazards:

1. Mechanical lock out/tag out by non-qualified personnel – treatment plants and pump stations (unattended).
2. Work on Greater Than Category 4 equipment by qualified electrical personnel.
3. Energized work in emergencies.
4. Hand-Off-Auto (HOA) selector switches located on motor control centers (MCCs) and variable frequency drive (VFD) panels – treatment plants and pump stations.

HRSD Arc Flash Program Goals:

1. Reduce arc flash hazard/risk category to Category 2 or lower (MCC and VFD panels should be reduced to Category 0).
2. Resolve issues with lock out/tag out by non-qualified personnel.
3. Determine method to manage changes to equipment and standard procedures:
   a. Standards & Preferences.
   b. Software (SKM model updates) and hardcopy documentation.
      i. Who will manage; where stored.
      ii. How will changes be tracked.
   c. Manage through construction.
4. Electrical Safety Program in compliance with standards.
   a. Training and qualifying personnel.

HRSD Mitigation Actions to Date:

1. Prepared Draft Electrical Safety Program (held up on lock out/tag out issue).
2. Initiated pilot program at Virginia Initiative Plant (VIP) - mechanical lock out/tag out:
   a. Local shared PPE at equipment (Category 2) - Grit MCC.
   b. Remote Switching Operator (RSO) device - RAS MCC.
3. Purchased Eaton remote racking device for switchgear breakers (located at VIP Blower Building).
4. Developed form for tracking equipment changes.

5. Conducted re-training for all qualified electrical personnel on NFPA 70E.
6. Installed permanent remote operating panel for opening/closing existing 2SB1 main circuit breakers at VIP.
7. Retrofitted circuit breakers with AC-PRO with QUICK-TRIP trip units to provide adjustable long time, short time, and instantaneous settings (LSI) at VIP.
8. Installing Arc Reduction Maintenance Switch (ARMS) and maintenance bypass transfer switches at Army Base Treatment Plant (ABTP).
9. VIP NRI design will include separate enclosures for the Main Switchgear main circuit breakers at VIP.
10. Compiled spreadsheet of electrical equipment with respective arc flash hazard/risk categories.

Potential Arc Flash Mitigation Alternatives for Medium Voltage Switchgear:

New	Retrofit Existing
Bus differential relays installed in switchgear • Approximately $5k • There is a concern with nuisance tripping	Bus differential relays installed in switchgear • Approximately $5k • There is a concern with nuisance tripping
Maintenance bypass switch on main and feeder circuit breakers	Maintenance bypass switch on main and feeder circuit breakers
Separate main circuit breaker • Partitions in switchgear • Separate rooms • Separate space in room	Clean air/filtration/climate control (applies to all equipment)
Permanent remote operator	Permanent remote operator
Arc flash sensing relay	Arc flash sensing relay
Main-tie-tie-main configuration (doubled ended switchgear)	Upgrade induction disc relays to microprocessor relays
5-cycle breakers	

Potential Arc Flash Mitigation Alternatives for Medium Voltage MCC:

New	Retrofit Existing
Remove HOA from MCC	Remove HOA from MCC
Bus differential installed in switchgear • Approximately $5k • There is a concern with nuisance tripping	Bus differential installed in switchgear • Approximately $5k • There is a concern with nuisance tripping
Maintenance bypass switch	Maintenance bypass switch
Separate main circuit breaker • Partitions in switchgear • Separate rooms • Separate space in room	Clean air/filtration/climate control (applies to all equipment)
Permanent remote operator	Permanent remote operator
Arc flash sensing relay	Arc flash sensing relay
Main-tie-tie-main configuration (double ended switchgear)	Upgrade induction disc relays to microprocessor relays
5-cycle breakers	

Potential Arc Flash Mitigation Alternatives for Low Voltage Switchgear:

New	Retrofit Existing
Maintenance bypass at upstream medium voltage feeder and/or at main circuit breaker	Retrofit unit substations (3.F. in Attachment A)
Remote open/close and remote racking	Remote open/close and remote racking
Separate main circuit breaker from switchgear	Remove main circuit breaker and install in separate location (if possible)
Arc flash sensing relay	Arc flash sensing relay
Arc Vault	Arc Vault
Zone selective interlocking (ZSI)	ZSI

Potential Arc Flash Mitigation Alternatives for Low Voltage Switchboards:

New	Retrofit Existing
Not preferred for new equipment	Replace with switchgear
Separate main circuit breaker from switchboard	Remove main circuit breaker and install in separate location
Arc Vault	Arc vault
Maintenance bypass switch at upstream feeder circuit breaker and/or at main circuit breaker	Maintenance bypass switch at upstream feeder circuit breaker and/or at main circuit breaker
	Remote open/close of insulated case circuit breakers

Potential Arc Flash Mitigation Alternatives for Low Voltage MCC:

New	Retrofit Existing
Separate main circuit breaker from MCC	Remove main circuit breaker and install in separate location (if possible)
Solid state trip unit on upstream feeder circuit breaker and/or main circuit breaker	Solid state trip unit on upstream feeder circuit breaker and/or main circuit breaker
Remote racking	Remote switch operator (RSO)
Arc Vault	Arc Vault

Potential Arc Flash Mitigation Alternatives for Low Voltage VFD and Control Panels:

New	Retrofit Existing
Remote mount HOAs (Category 1 or higher)	Remote mount HOAs (Category 1 or higher)
Solid state trip unit (LSI) on upstream feeder circuit breakers to VFDs and main circuit breakers	

Potential Arc Flash Mitigation Alternatives for Low Voltage Power Panels and Transfer Switches:

New	Retrofit Existing
Addressed by upstream protective device	
Address construction quality in Standards & Preferences	

Alternatives to be Evaluated for Lowering Arc Flash Hazard Category in Pump Stations:

New	Retrofit Existing
Main circuit breaker mounted outside	Main circuit breaker mounted outside
Install upstream separately-mounted circuit breaker	Install upstream separately-mounted circuit breaker
Smart MCC with networking	Remote switching

Alternatives to be Evaluated to Address Pump Station Equipment Lock Out/Tag Out:

New	Retrofit Existing
Local disconnect with remote start/stop	Local disconnect with remote start/stop
Remote switching	Remote switching
Personal protective equipment (PPE)	PPE
Achieve Category 0 at pump station	Achieve Category 0 at pump station

Alternatives to be Evaluated to Address Plant HOAs:

New	Retrofit Existing
HOA located at process equipment without VFD	Achieve Category 0 at MCC/VFD panel
HOA on VFD with DCS shutdown	Relocate HOA to motor/equipment
Local disconnect at all equipment with DCS shutdown	Connect to DCS
HOA located at HVAC equipment	

Alternatives to be Evaluated to Address Plant Equipment Lock out/Tag out:

New and Retrofit	Retrofit Existing
Local disconnect switch at all equipment with DCS shutdown	RSO devices (all categories)
Design for Category 0 at applicable panels (MCCs, VFD panels, control panels, etc.)	PPE (Category 2 or lower)
	Modify circuit breakers
	Change protective schemes

Criteria that will be used to evaluate alternatives:

- Initial cost
- Safety – achieve low arc flash hazard/risk
- Risk – loss of operation
- Ease of operation
- Reliability – of implemented equipment
- Versatility - addresses lock out/tag out and electrical work
- Annual cost
- Feasibility/Maintaining operation

Preliminary Decisions:

1. Existing pump stations and new pump stations (< 400A service):
   a. Use portable remote switching operator (RSO) devices.
   b. Relocate HOAs off of MCC.
   c. For new pump stations, separately-mount main circuit breaker inside the pump station.
2. New pump stations (≥ 400A service):
   a. Install main circuit breaker with adjustable LSI trip unit and remote switching.
   b. Separately-mount main circuit breaker inside the pump station.
   c. For Greater Than Category 4 areas, workers need to have utility shut down power at their end to work on main circuit breaker.
   d. HOAs mounted off of MCC.
   e. Consider using SCADA to shutdown equipment and install local disconnect switches.

Miscellaneous Notes:

1. 5 year audit - does it require upgrade to current code?
2. Arc flash labels - equipment based or task based?
3. Who tracks/maintains software?
4. Testing should include circuit breaker trip time.
5. Work on electrical equipment with a Greater Than Category 4 rating at plants by qualified electrical personnel requires equipment to be de-energized prior to work.

Action Items:

1. HDR to draft Standard & Preferences language for new pump station electrical service configuration.
2. HRSD to procure RSO devices for existing pump stations.
3. HRSD to contract relocation of HOAs in existing pump stations.
4. HDR to evaluate actions to achieve Category 0 at MCCs, VFD panels, and other applicable panels requiring lock out/tag out at VIP, one larger pump station, and one smaller pump station. Also, evaluate relocation of HOAs to motors at VIP. Consider risk reduction (Category 2 or lower) for electrical work at distribution equipment.
5. HRSD complete pilot testing of RSO devices and PPE at VIP.
6. HDR draft Standard & Preferences language for MCCs, VFD panels, and other applicable panels in new plant designs to address lock out/tag out (goal to achieve Category 0l, with adding local disconnects as alternative). Also, installing motorized circuit breakers that feed large VFD panels).
7. HRSD to develop cost for installation of local disconnect switches at two pump stations.
8. HDR draft Standard & Preferences language to address HOAs on new plant designs.
9. HDR draft Standard & Preferences language on managing construction process relative to arc flash (equipment shop drawings, etc.).
10. HRSD and HDR will schedule a follow-up one-day workshop upon completion of the evaluations listed in Actions Items 4 and 7.

Attachment A
Typical Approaches to Limiting Arc Flash Exposure

Limiting Arc Exposure

1. Avoiding arc flash accidents
2. Reducing the level of arc energy released
3. Proper use of personal protective equipment (PPE)

Avoiding Arc Flash Accidents

1. Preventive maintenance
    a. Keep equipment clean.
    b. Keep rodents and birds out of equipment.
    c. Control and repair corrosion of enclosure and electric components.
    d. Check for loose connections.
    e. Test insulation integrity.
    f. Test and repair relays/trip units and breakers.
    g. Test and repair moving parts (breaker racking, switch operation, etc.)
2. Working on Live Equipment
    a. If possible, always work on de-energized equipment.
    b. Use insulated tools.
    c. When excessive force is needed (loosening bolts), it is not uncommon to lose control.
    d. Do not use paint, cleaning chemicals, spray lubrication, etc. on live parts.

Reducing Incident Energy on Worker

1. Reduce the level of Fault
    a. Use smaller kVA transformers.
    b. Double ended switchgear:
        i. Keep tie breaker open in Main-Tie-Main configurations.
        ii. Use only one source of a Main-Main configuration.
        iii. Utilize two line-ups in a Main-Tie-Tie-Main configuration instead of one line-up in a Main-Tie-Main.
    c. Current limiting fuses or breakers.
    d. Current limiting reactors.
2. Reduce arcing time
    a. Reduce breaker response time safety margin.
        i. Replace electro-mechanical relays with microprocessor relays allows time margin between relays to be reduced from 0.4 second to 0.2 – 0.25 seconds.
        ii. Utilized 5 cycle breakers rather than 8 cycle breakers.
    b. Bus differential protection.
    c. Zone selective interlocking (ZSI).
    d. Temporary instantaneous settings:
        i. Arc maintenance settings on trip units.
        ii. Maintenance group setting on microprocessor relays.
        iii. Add instantaneous trip devices to breakers with no instantaneous that can be turned on and off.
    e. Arc flash sensing relays via fiber optical cable.
    f. Adjust fuse size and speed.
    g. General Electric Arc Vault.
    h. High/Low resistance grounding.
3. Equipment features
    a. Remote breaker operation (open/close).
    b. Remote breaker racking.
    c. Arc flash resistant MCC and switchgear. (not effective with doors open)
    d. MCC that can rack bucket out with door closed.
    e. Locate main breaker section remote (separate room) from distribution section.
    f. Retrofit unit substations (primary fuse switch with secondary feeder breakers) with secondary CT and relay and primary switch over breaker with trip unit to provide both primary and secondary protection.
    g. Remote switching operator (RSO) device.

SKM SYSTEMS ANALYSIS, INC

SHORT-CIRCUIT/COORDINATION STUDY/ARC FLASH RISK ASSESSMENT

PART 1 GENERAL

1.1 SCOPE

A. The contractor shall furnish short-circuit and protective device coordination studies as prepared by the electrical equipment manufacturer or an approved engineering firm.

B. The contractor shall furnish an Arc Flash Risk Assessment Study per the requirements set forth in NFPA 70E - Standard for Electrical Safety in the Workplace. The arc flash risk assessment shall be performed according to the IEEE 1584 equations that are presented in NFPA70E, Annex D.

C. The scope of the studies shall include all new distribution equipment supplied by the equipment Manufacturer under this contract. - OR - The scope of the studies shall include all new distribution equipment supplied by the equipment Manufacturer under this contract as well as all directly affected existing distribution equipment at the customer facility. - OR - The scope of the studies shall include all new distribution equipment supplied by the equipment Manufacturer under this contract as well as all existing distribution equipment

1.2 RELATED SECTIONS

1.3 REFERENCES

A. Institute of Electrical and Electronics Engineers, Inc. (IEEE):

1. IEEE 141 – Recommended Practice for Electric Power Distribution and Coordination of Industrial and Commercial Power Systems
2. IEEE 242 – Recommended Practice for Protection and Coordination of Industrial and Commercial Power Systems
3. IEEE 399 – Recommended Practice for Industrial and Commercial Power System Analysis
4. IEEE 241 – Recommended Practice for Electric Power Systems in Commercial Buildings
5. IEEE 1015 – Recommended Practice for Applying Low-Voltage Circuit Breakers Used in Industrial and Commercial Power Systems.
6. IEEE 1584 - Guide for Performing Arc-Flash Hazard Calculations

B. American National Standards Institute (ANSI):

1. ANSI C57.12.00 – Standard General Requirements for Liquid-Immersed Distribution, Power, and Regulating Transformers
2. ANSI C37.13 – Standard for Low Voltage AC Power Circuit Breakers

Used in Enclosures

3. ANSI C37.010 – Standard Application Guide for AC High Voltage Circuit Breakers Rated on a Symmetrical Current Basis

4. ANSI C 37.41 – Standard Design Tests for High Voltage Fuses, Distribution Enclosed Single-Pole Air Switches, Fuse Disconnecting Switches and Accessories.

C. The National Fire Protection Association (NFPA)

1. NFPA 70 - National Electrical Code, latest edition
2. NFPA 70E – Standard for Electrical Safety in the Workplace

1.4 SUBMITTALS FOR REVIEW/APPROVAL

A. The short-circuit and protective device coordination studies shall be submitted to the design engineer prior to receiving final approval of the distribution equipment shop drawings and/or prior to release of equipment drawings for manufacturing. If formal completion of the studies may cause delay in equipment manufacturing, approval from the engineer may be obtained for preliminary submittal of sufficient study data to ensure that the selection of device and characteristics will be satisfactory.

1.5 SUBMITTALS FOR CONSTRUCTION

A. The results of the short-circuit, protective device coordination and arc flash risk assessment studies shall be summarized in a final report. No more than five (5) bound copies of the complete final report shall be submitted. For large system studies, submittals requiring more than five (5) copies of the report will be provided without the section containing the computer printout of the short-circuit input and output data. Additional copies of the short-circuit input and output data, where required, shall be provided on CD in PDF format.

B. Following best practices, the contractor is to provide the study project files to the Owner in electronic format to allow the Owner to review all aspects of the project input data and reprint arc flash labels, one-line diagrams, reports etc. The electronic project files are critical for disaster recovery and maintaining the power system. In addition, a copy the PTW Viewer program is required to accompany the electronic project files (or Owner to purchase directly from SKM).

C. The report shall include the following sections:

1. Executive Summary.
2. Descriptions, purpose, basis and scope of the study
3. Tabulations of circuit breaker, fuse and other protective device ratings versus calculated short circuit duties
4. Protective device time versus current coordination curves, tabulations of relay and circuit breaker trip unit settings, fuse selection
5. Fault current calculations including a definition of terms and guide for interpretation of the computer printout.
6. Details of the incident energy and flash protection boundary calculations

7. Recommendations for system improvements, where needed.
8. One-line diagram

Arc flash labels shall be provided in hard copy only. -OR- Arc flash labels shall be provided in hard copy and for large system studies with more than 200 bus locations, a copy of the

A. electronic format.

1.6 QUALIFICATIONS

A. The short-circuit, protective device coordination and arc flash risk assessment studies shall be conducted under the supervision and approval of a Registered/Licensed Professional Electrical Engineer skilled in performing and interpreting the power system studies.

B. The Registered/Licensed Professional Electrical Engineer shall be a full-time employee of the equipment manufacturer or an approved engineering firm

C. The Registered/Licensed Professional Electrical Engineer shall have a minimum of five
(5) years of experience in performing power system studies.

D. The equipment manufacturer or approved engineering firm shall demonstrate experience with Arc Flash Risk Assessment by submitting names of at least ten actual arc flash risk assessment it has performed in the past year.

1.7 COMPUTER ANALYSIS SOFTWARE

A. The studies shall be performed using the latest revision of the SKM Systems Analysis Power*Tools for Windows (PTW) software program or approved equal.

PART 2 PRODUCT

2.1 STUDIES

A. Contractor to furnish short-circuit and protective device coordination studies as prepared by equipment manufacturer or an approved engineering firm.

B. The contractor shall furnish an Arc Flash Risk Assessment Study per NFPA 70E - Standard for Electrical Safety in the Workplace, reference Article 130.5 and Annex D.

2.2 DATA COLLECTION

A. Contractor shall furnish all data as required by the power system studies. The Engineer performing the short-circuit, protective device coordination and arc flash risk assessment studies shall furnish the Contractor with a listing of required data immediately after award of the contract. The Contractor shall expedite collection of the data to assure completion of the studies as required for final approval of the distribution equipment shop drawings and/or prior to the release of the equipment for manufacturing.

B. Source combination may include present and future motors and generators.

C. Load data utilized may include existing and proposed loads obtained from Contract Documents provided by Owner, or Contractor.

D. If applicable, include fault contribution of existing motors in the study. The Contractor shall obtain required existing equipment data, if necessary, to satisfy the study requirements.

2.3 SHORT-CIRCUIT AND PROTECTIVE DEVICE EVALUATION STUDY

A. Use actual conductor impedances if known. If unknown, use typical conductor impedances based on IEEE Standard 141-1993.

B. Transformer design impedances shall be used when test impedances are not available.

C. Provide the following:

1. Calculation methods and assumptions
2. Selected base per unit quantities
3. One-line diagram of the system being evaluated
4. Source impedance data, including electric utility system and motor fault contribution characteristics
5. Tabulations of calculated quantities
6. Results, conclusions, and recommendations.

D. Calculate short-circuit momentary and interrupting duties for a three-phase bolted fault at each:

1. Electric utility's supply termination point
2. Incoming switchgear
3. Unit substation primary and secondary terminals
4. Low voltage switchgear
5. Motor control centers
6. Standby generators and automatic transfer switches
7. Branch circuit panelboards
8. Other significant locations throughout the system.

E. For grounded systems, provide a bolted line-to-ground fault current study for areas as defined for the three-phase bolted fault short-circuit study.

F. Protective Device Evaluation:

1. Evaluate equipment and protective devices and compare to short circuit ratings
2. Adequacy of switchgear, motor control centers, and panelboard bus bars to withstand short-circuit stresses
3. Notify Owner in writing, of existing, circuit protective devices improperly rated for the calculated available fault current.

2.4 PROTECTIVE DEVICE COORDINATION STUDY

A. Proposed protective device coordination time-current curves (TCC) shall be

displayed on log-log scale graphs.

B. Include on each TCC graph, a complete title and one-line diagram with legend identifying the specific portion of the system covered.

C. Terminate device characteristic curves at a point reflecting maximum symmetrical or asymmetrical fault current to which the device is exposed.

D. Identify the device associated with each curve by manufacturer type, function, and, if applicable, tap, time delay, and instantaneous settings recommended.

E. Plot the following characteristics on the TCC graphs, where applicable:

1. Electric utility's overcurrent protective device
2. Medium voltage equipment overcurrent relays
3. Medium and low voltage fuses including manufacturer's minimum melt, total clearing, tolerance, and damage bands
4. Low voltage equipment circuit breaker trip devices, including manufacturer's tolerance bands
5. Transformer full-load current, magnetizing inrush current, and ANSI through-fault protection curves
6. Conductor damage curves
7. Ground fault protective devices, as applicable
8. Pertinent motor starting characteristics and motor damage points, where applicable
9. Pertinent generator short-circuit decrement curve and generator damage point
10. The largest feeder circuit breaker in each motor control center and applicable panelboard.

F. Provide adequate time margins between device characteristics such that selective operation is provided, while providing proper protection.

2.5 ARC FLASH RISK ASSESSMENT

A. The arc flash risk assessment shall be performed according to the IEEE 1584 equations that are presented in NFPA70E, Annex D.

B. The flash protection boundary and the incident energy shall be calculated at all significant locations in the electrical distribution system (switchboards, switchgear, motor-control centers, panelboards, busway and splitters) where work could be performed on energized parts.

C. The Arc-Flash Risk Assessment shall include all significant locations in 240 volt and 208 volt systems fed from transformers equal to or greater than 125 kVA where work could be performed on energized parts.

D. Safe working distances shall be based upon the calculated arc flash boundary considering an incident energy of 1.2 cal/cm^2.

E. When appropriate, the short circuit calculations and the clearing times of the phase overcurrent devices will be retrieved from the short-circuit and coordination study model. Ground overcurrent relays should not be taken into consideration when determining the clearing time when performing incident energy calculations

The short-circuit calculations and the corresponding incident energy calculations for multiple system scenarios must be compared and the greatest incident energy must be uniquely reported for each

equipment location. Calculations must be performed to represent the maximum and minimum contributions of fault current magnitude for all normal and emergency operating conditions. The minimum calculation will assume that the utility

A. contribution is at a minimum and will assume a minimum motor contribution (all motors off). Conversely, the maximum calculation will assume a maximum contribution from the utility and will assume the maximum amount of motors to be operating. Calculations shall take into consideration the parallel operation of synchronous generators with the electric utility, where applicable.

B. The incident energy calculations must consider the accumulation of energy over time when performing arc flash calculations on buses with multiple sources. Iterative calculations must take into account the changing current contributions, as the sources are interrupted or decremented with time. Fault contribution from motors and generators should be decremented as follows:

   1. Fault contribution from induction motors should not be considered beyond 3-5 cycles.
   2. Fault contribution from synchronous motors and generators should be decayed to match the actual decrement of each as closely as possible (e.g. contributions from permanent magnet generators will typically decay from 10 per unit to 3 per unit after 10 cycles).

C. For each equipment location with a separately enclosed main device (where there is adequate separation between the line side terminals of the main protective device and the work location), calculations for incident energy and flash protection boundary shall include both the line and load side of the main breaker.

D. When performing incident energy calculations on the line side of a main breaker (as required per above), the line side and load side contributions must be included in the fault calculation.

E. Mis-coordination should be checked amongst all devices within the branch containing the immediate protective device upstream of the calculation location and the calculation should utilize the fastest device to compute the incident energy for the corresponding location.

F. Arc Flash calculations shall be based on actual overcurrent protective device clearing time. Maximum clearing time will be capped at 2 seconds based on IEEE 1584-2002 section B.1.2. Where it is not physically possible to move outside of the flash protection boundary in less than 2 seconds during an arc flash event, a maximum clearing time based on the specific location shall be utilized.

2.6 REPORT SECTIONS

A. Input data shall include, but not be limited to the following:

   1. Feeder input data including feeder type (cable or bus), size, length, number per phase, conduit type (magnetic or non-magnetic) and conductor material (copper or aluminum).

2. Transformer input data, including winding connections, secondary neutral-ground connection, primary and secondary voltage ratings, kVA rating, impedance, % taps and phase shift.
3. Reactor data, including voltage rating, and impedance.

4. Generation contribution data, (synchronous generators and Utility), including short- circuit reactance (X”d), rated MVA, rated voltage, three-phase and single line- ground contribution (for Utility sources) and X/R ratio.
5. Motor contribution data (induction motors and synchronous motors), including short-circuit reactance, rated horsepower or kVA, rated voltage, and X/R ratio.

B. Short-Circuit Output Data shall include, but not be limited to the following reports:
1. Low Voltage Fault Report shall include a section for three-phase and unbalanced fault calculations and shall show the following information for each applicable location:
   a. Voltage
   b. Calculated fault current magnitude and angle
   c. Fault point X/R ratio
   d. Equivalent impedance
2. Momentary Duty Report shall include a section for three-phase and unbalanced fault calculations and shall show the following information for each applicable location:
   a. Voltage
   b. Calculated symmetrical fault current magnitude and angle
   c. Fault point X/R ratio
   d. Calculated asymmetrical fault currents
      1. Based on fault point X/R ratio
      2. Based on calculated symmetrical value multiplied by 1.6
      3. Based on calculated symmetrical value multiplied by 2.7
   e. Equivalent impedance
3. Interrupting Duty Report shall include a section for three-phase and unbalanced fault calculations and shall show the following information for each applicable location:
   a. Voltage
   b. Calculated symmetrical fault current magnitude and angle
   c. Fault point X/R ratio
   d. No AC Decrement (NACD) Ratio
   e. Equivalent impedance
   f. Multiplying factors for 2, 3, 5 and 8 cycle circuit breakers rated on a symmetrical basis
   g. Multiplying factors for 2, 3, 5 and 8 cycle circuit breakers rated on a total basis

C. Recommended Protective Device Settings:
1. Phase and Ground Relays:
   a. Current transformer ratio
   b. Current setting
   c. Time setting

   d. Instantaneous setting
   e. Recommendations on improved relaying systems, if applicable.
2. Circuit Breakers:
   a. Adjustable pickups and time delays (long time, short time, ground)
   b. Adjustable time-current characteristic

c. Adjustable instantaneous pickup
d. Recommendations on improved trip systems, if applicable.

Incident energy and flash protection boundary calculations

1. Arcing fault magnitude
2. Protective device clearing time
3. Duration of arc
4. Arc flash boundary
5. Working distance
6. Incident energy
7. Hazard Risk Category*
8. Recommendations for arc flash energy reduction

*Applicable only when using the arc flash PPE category method.

PART 3 EXECUTION

3.1 FIELD ADJUSTMENT

A. Adjust relay and protective device settings according to the recommended settings table provided by the coordinaField adjustments to be completed by engineering service division of the equipment manufacturer under the Acceptance Testing contract .

B. Make minor modifications to equipment as required to accomplish conformance with short circuit and protective device coordination studies.

C. Notify Owner in writing of any required major equipment modifications.

3.2 ARC FLASH WARNING LABELS

A. The contractor of the Arc Flash Risk Assessment shall provide a 3.5 in. x 5 in. thermal transfer type label of high adhesion polyester for each work location analyzed.

B. All labels will be based on recommended overcurrent device settings and will be provided after the results of the analysis have been presented to the owner and after any system changes, upgrades or modifications have been incorporated in the system.

C. The label shall include the following information, at a minimum:

1. Location designation
2. Nominal voltage
3. Flash protection boundary
4. Hazard risk category*
5. Incident energy

6. Working distance
7. Engineering report number, revision number and issue date.

*Applicable only when using the arc flash PPE category method.

D. Labels shall be machine printed, with no field markings.

E. Arc flash labels shall be provided in the following manner and all labels shall be based on recommended overcurrent device settings.

1. For each 600, 480 and applicable 208 volt panelboard, one arc flash label shall be provided.
2. For each motor control center, one arc flash label shall be provided.
3. For each low voltage switchboard, one arc flash label shall be provided.
4. For each switchgear, one flash label shall be provided.
5. For medium voltage switches one arc flash label shall be provided

F. Labels shall be field installed by the engineering service division of the equipment manufacturer under the Startup and Acceptance Testing

3.3 ARC FLASH TRAINING

A. The contractor of the Arc Flash Risk Assessment shall train the owner's qualified electrical personnel of the potential arc flash risks associated with working on energized equipment (minimum of 4 hours).

3.4 ARC FLASH COORDINATION MEETING

A. Conduct an ARC Flash meeting with HRSD Electrical Personnel after equipment selection to discuss reporting format, guidelines, expectations, and defining responsibilities. This includes consultants, equipment manufacturers, and electrical contractors, etc.

Click here to return to Diesel Generator Tests (PSs)

Exhibit B

North and South Shore Pump Stations
Load Bank Connection's
5560 C/S FY12 Rev 04

PART I – GENERAL

1.01 Scope of Work – Rolling Hills and Colonial Williamsburg Pump Stations

The work to be performed under this Section shall include furnishing all labor, materials, tools and equipment necessary to install and test all load bank connections.

A. Work includes providing labor and materials to build and install a Deep Hinged Window Kit with locking wing knobs and an aluminum inner plate for mounting the necessary panel receptacles.

The Deep Hinged Window Kit shall be sized and configured to insure proper safe distances between all energized components to grounding surfaces with the hinged cover closed and locked while the panel receptacles are energized.

- Special Notation
  - The amount of panel receptacles and Deep Hinged Window Kit shall be sized to meet the minimum of 100% rating of the generator load with additional room to add 50% more panel receptacles.

B. Work includes installing properly sized aluminum plate and Deep Hinged Window Kit to meet 150% of the capacity of the generator.

C. Work includes providing and installing all necessary lugs in transfer switch to accept cable for panel receptacles.

- Special Notation
  - Lugs shall be sized to accept conductors being used for panel receptacles and conductors from generator.

D. Work includes making all necessary terminations in a workmanship like manor.

E. Work includes removing a portion of the steel side door of the transfer switch and mounting an aluminum plate of adequate size to cover area removed and to accept panel receptacles to meet 150% of the capacity of the generator.

F. Work includes mounting Aluminum Plate, Panel Receptacles, and Deep Hinged Window Kit with machine screws and nuts of adequate size.

G. Work includes coordination with HRSD to perform an operational test to validate product quality and installation.

H. Work must be performed onsite between hours of 7am-3pm Mon-Fri. The time schedule may be altered if approved by owner.

1.02 Scope of Work – Rodman, Quail, and Suffolk Pump Stations

The work to be performed under this Section shall include furnishing all labor, materials, tools and equipment necessary to install and test all load bank connections.

A. Work includes providing labor and materials to install conduit, wire, and deep hinged NEMA 4X junction box with an aluminum dead front panel for mounting the necessary panel receptacles.

The junction box shall be sized and configured to insure proper safe distances between all energized components to grounding surfaces with the hinged cover closed and locked while the panel receptacles are energized.

- Special Notation
  - The amount of panel receptacles and junction box shall be sized to meet the minimum of 100% rating of the generator load with additional room to add 50% more panel receptacles.

B. Work includes installing properly sized aluminum plate and junction box to meet 150% of the capacity of the generator.

C. Work includes providing and installing all necessary lugs in transfer switch to accept cable for panel receptacles.

- Special Notation
  - Lugs shall be sized to accept conductors being used for panel receptacles and conductors from generator.

D. Work includes making all necessary terminations in a workmanship like manor.

E. Work includes installing properly sized conduit and fittings necessary from the existing transfer switch to the receptacle junction box.

F. Work includes mounting aluminum dead front plate and Panel Receptacles in junction box.

G. Work includes coordination with HRSD to perform an operational test to validate product quality and installation.

H. Work must be performed onsite between hours of 7am-3pm Mon-Fri. The time schedule may be altered if approved by owner.

1.03 Submittals

B. The contractor shall submit a minimum of four copies of all submittals in a three ring binder. Any CAD drawings or other relevant information must be submitted in electronic format on a CD (Compact Disc). The Owner will review and approve before any material is purchased or any work has commenced. The submittals shall be delivered or mailed to the North Shore Electrical Shop, 2391 G Avenue Newport News, VA 23602 Attn: Dean Lowery or the South Shore Electrical Shop,1424 Air rail Ave, VA Beach VA 23455 Attn: Donnie Ward.

C. The following submittals will be provided:

a. Manufacture Product Specification's of cables, connectors, enclosure, and associated hardware.

Part 2 Products

2.01 Panel Receptacles shall be Leviton 18 series female panel receptacle, Cam type 400 amp 600v 1/0 – 4/0 AWG. (18R24-(B,O,Y,G))

A. Panel Receptacles shall be Leviton® 18series female receptacle Cam type 400amp 600v, 1/0 – 4/0 AWG (part No.18R24).

B. Panel Receptacles shall be colored to match corresponding phase and grounding conductor (grounded conductor Not Applicable)

i.e.: 480V or 240V
A phase – Brown/Black
B phase – Orange/Red
C phase – Yellow/Blue
Ground - Green
Neutral – NA

2.02 Deep Hinged Window Kit with locking wing knobs (Rolling Hills, Colonial Williamsburg)

A. Deep Hinged Window Kit with locking wing knobs may be Hoffman® (i.e. CAT No. AWDH2420N4) or equivalent quality.

B. Window Kit shall be capable of being locked.

C. Shall be mounted with machine screws and nuts.

2.03 Deep Junction Box with Aluminum dead front panel (Rodman, Quail, Suffolk)

A. Shall be lockable, hinged, and NEMA 4X

B. Shall have an aluminum dead front panel

2.04 Lugs

A. Shall be that of a manufacture with conductor size and temperature rating stamped into side of lug.

B. Shall be capable of accepting the correct number of conductors coming from the generator and panel receptacles (a minimum of 100% rating of the generator).

2.05 Aluminum Plate

A. Shall be a minimum of 1/4" thick.

B. Shall be adequate size to accept the panel receptacles capable of 150% of the generator rating.

C. Shall be mounted with machine screws and nuts.

2.06 Conductor

A. Shall be that of DLO type (Diesel Locomotive Cable)

B. Shall be a minimum of 4/0 and 600v rated.

C. Shall be supported so as not to cause stress on the insulation of the conductor or the lugs where being terminated.

D. Stranded, Copper

2.07 Conduit and Fittings

A. Shall be sized appropriately for conductors.
B. Conduit shall be galvanized ridged steel.
C. Conduit fittings shall be malleable iron,

Part 3 Execution

3.01 General and Schedule of work

A. A schedule of work shall be prepared by the Contractor and submitted to the Owner within 10 days of the project award. **The project must be completed and invoiced by Friday June 15th, 2012 to receive payment**.

B. This project is located on the North Shore as well as the South Shore at total of five separate HRSD owned waste water pumping stations.
- The North Shore Stations are:
  1. Rolling Hills – 402 Rolling Hills Dr. Williamsburg VA 23185
  2. Colonial Williamsburg – 1000 RT. 132 Williamsburg VA 23185
- The South Shore Stations are:
  1. Rodman – 2412 Rodman Ave., Portsmouth VA 23707
  2. Suffolk – 1136 Sanders Dr., Suffolk VA 23434
  3. Quail PRS – 822 Quail Ave. Chesapeake VA 23324

C. The installation of the aluminum plate with the appropriate amount of panel receptacles and Deep Hinged Window Kit with locking wing knobs shall be determined at each location.

D. The location of where the junction boxes, panel receptacles, aluminum plate and Deep Hinged Window Kit with locking wing knobs will be determined at each location depending on equipment layout.
- Special Notation
  - The preferred location will be as low to the finished floor as possible and towards the hinged side of the door or on a side of the transfer switch.
  - Where junction boxes are installed the preferred location is top of box at 6 feet from finished grade outside.

E. The successful contractor shall perform work in a safe and workmanship manner and adhere to all applicable codes.

F. The contractor must attend safety orientation training prior to starting construction, which will be facilitated by HRSD Safety Department. Call Jennifer See at (757) 460 - 7060 to schedule an appointment.

G. The successful contractor shall contact HRSD personnel when entering and exiting into the pump station. On North Shore call (757) 833-1720 and (757) 460-7072 on the South Shore. HRSD access Badges and keys will be issued by HRSD. The contractor must make a log entry in the stations log book upon arrival and departure of the station.

H. The contractor shall coordinate all shutdowns with the contact personnel. Certain weather events may dictate rescheduling a shutdown at the last minute and is up to the discretion of the owner.

I. This work will require qualified personnel to work in proximity of energized parts; a energized work permit is required to perform work "hot".

Part 4 HRSD Contacts

4.01 Contact personnel

A. North Shore Electrical Supervisor

Dean Lowery – 757-274-4947 cell 757-833-1702 desk

B. South Shore Electrical Supervisor
Donnie Ward – 757-376-2721 cell 757460-7348 desk

C. Electrical Superintendent
John Haymore – 757-376-3376 cell 757-460-7033 desk

D. Electrical Manager
Sherman Pressey – 757-274-8753cell 757-833-1715 desk

Other
- Meetings (pre-bid, pre-construction, and other coordination meetings).
- Cost estimate breakdown (includes labor, material, and other associated cost).

Attachments
A – Hoffman Window Kits
B – Leviton Connectors
C – Photos

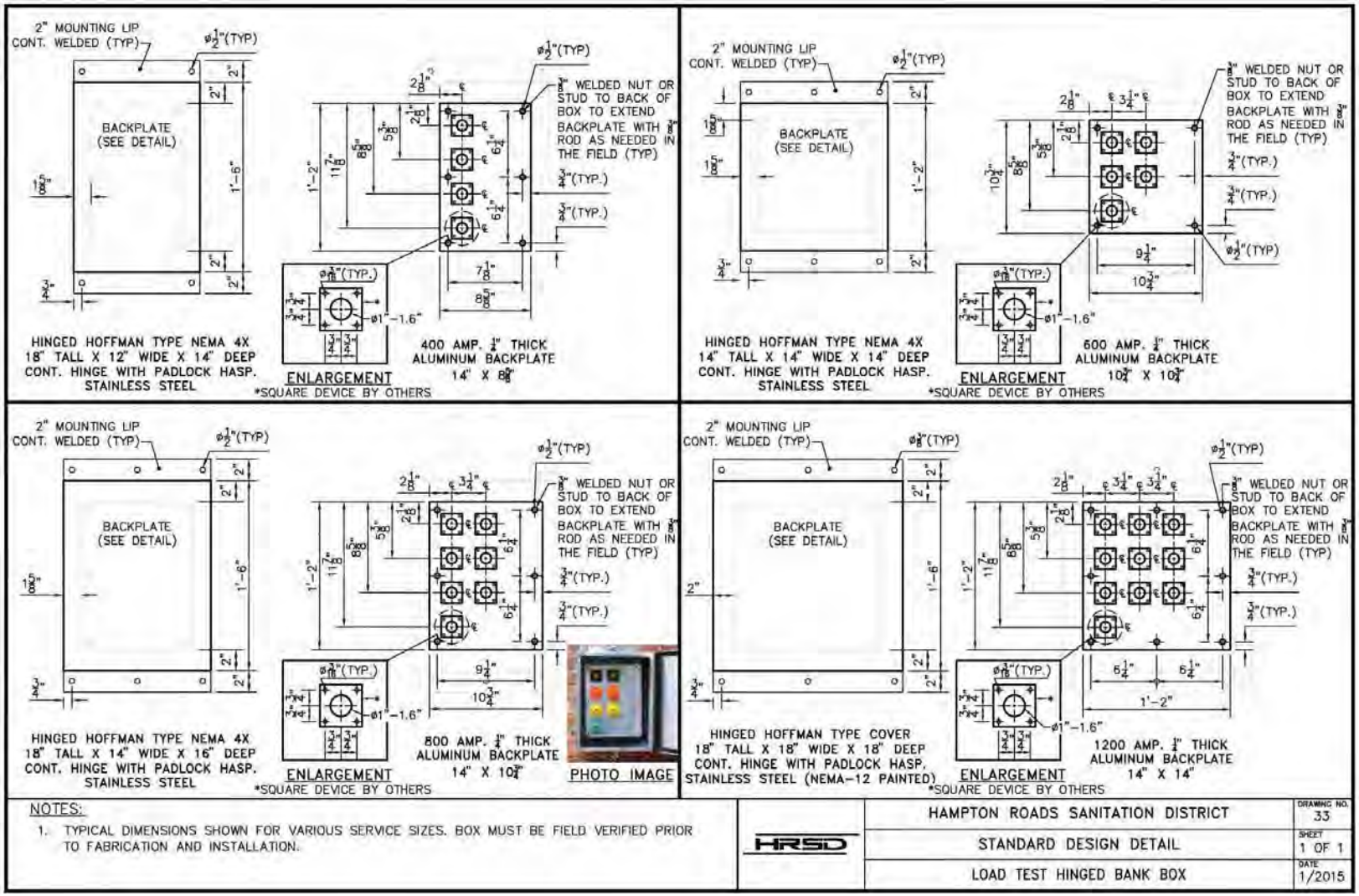

NOTES:

1. TYPICAL DIMENSIONS SHOWN FOR VARIOUS SERVICE SIZES. BOX MUST BE FIELD VERIFIED PRIOR TO FABRICATION AND INSTALLATION.

HRSD

HAMPTON ROADS SANITATION DISTRICT

STANDARD DESIGN DETAIL

LOAD TEST HINGED BANK BOX

DRAWING NO. 33

SHEET 1 OF 1

DATE 1/2015

Alternative Load Bank Box Solution

TripleSwitch™ 3-Way Manual Transfer Switch

ESL POWER SYSTEMS

UL 1008 Listed

125 - 400A, up to 600VAC

Series: 3141-M

Features

- Accepts 24VDC signal from ATS to switch power during load bank testing (other signal trip voltages available)

- Quick connect solution for permanent generator load bank testing and a backup portable generator
- Mechanically interlocked mechanism prevents cross-connecting power sources
- Dry contacts provided for annunciator circuit
- Disconnects are 3-pole circuit breakers as standard (optional 4-pole breakers or molded case switches available)
- Type 3R heavy gauge galv. steel enclosure with gray powdercoat RAL 7035 (stainless steel & additional colors optional)
- Color-coded series 16 cam style connectors for easy back-up generator (male) & load bank (female) connection
- Handle cover provides security from unauthorized use
- Wall mountable; leg kits optional
- Operating instructions silkscreened on door
- Optional extended enclosure (8" deeper) for bottom conduit feed
- NEC 700.12 compliant

Drawing

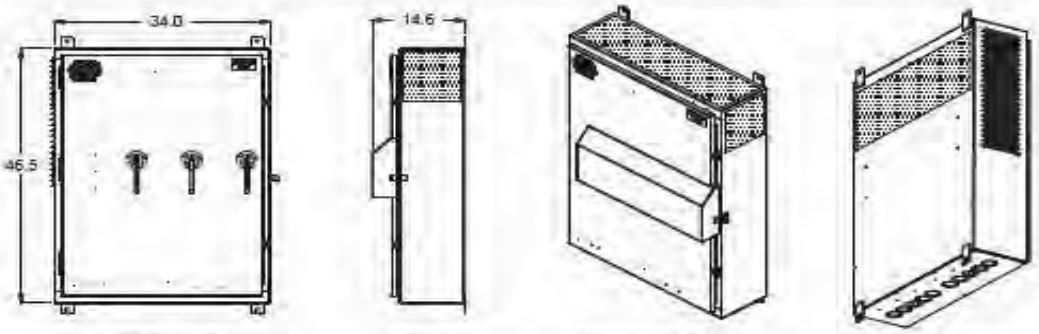

FRONT VIEW (HANDLE COVER NOT SHOWN) | SIDE VIEW | FRONT ANGLE VIEW | REAR ANGLE VIEW

Available incoming conduit entry locations shown shaded.

Approvals

- UL/cUL 1008 Listed assembly
- UL 1691 Listed receptacles
- UL 1087 Listed molded case switch
- UL 489 Listed / CSA certified molded case circuit breaker
- OSHPD seismic certification (OSP)
- ICC-ES 156 shake-table tested/certified
- IBC 2015/ASCE 7-10 compliant

Specifications

TripleSwitch 3-Way Manual Transfer Switch
Series: 3141-M

UL 1008 Listed

Ordering Information

Example: M3D4 - 400C - 400C - 400C - 208 - 311 - S - C

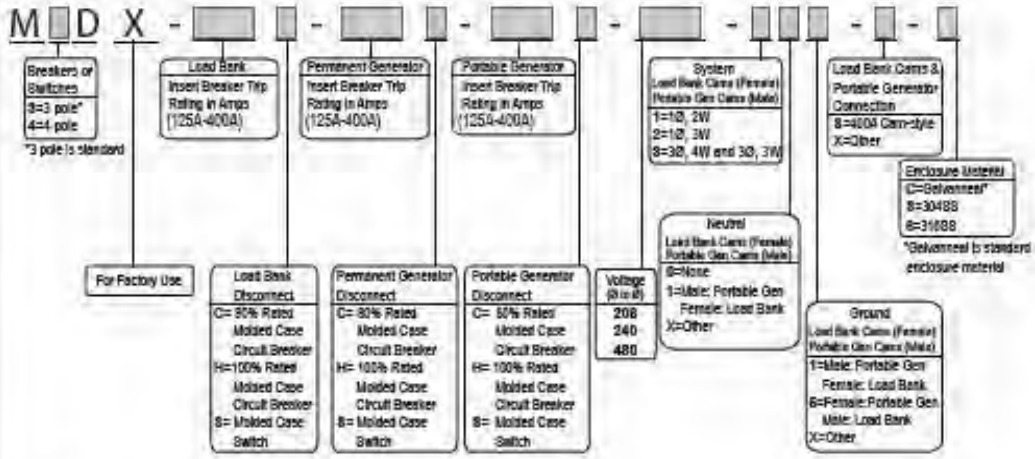

Contact factory for additional options

Ratings

Short circuit rating (breakers)	65kAIC @ 208VAC & 240VAC, 35kAIC @ 480VAC, 18kAIC @ 600VAC
Withstand rating (switches)	10kA @ 208VAC to 600VAC
Cam-style receptacles	Includes the following for both load bank & portable generator: (1)400A, 600VAC for each phase, neutral and ground
Terminals	Disconnect line terminals: (2) 2/0 - 500kcmil Load terminals: (2) 2/0 - 500kcmil Ground lug: (3) #6 - 300kcmil Neutral: (4) 2/0 - 500kcmil Other options available
Environmental	Type 3R, gasketed (Type 3RX with 304SS or 316SS option)

Packaging

Approximate product weight	370 lbs.
Approximate shipping weight	410 lbs.

TripleSwitch™ 3-Way Manual Transfer Switch

ESL POWER SYSTEMS

UL 1008 Listed

450 - 800A, up to 600VAC

Series: 3181-M

- Accepts 24VDC signal from ATS to switch power during load bank testing (other signal trip voltages available)

Features

- Quick connect solution for permanent generator load bank testing and a backup portable generator
- Mechanically interlocked mechanism prevents cross-connecting power sources
- Dry contacts provided for annunciator circuit
- Disconnects are 3-pole circuit breakers as standard (optional 4-pole breakers or molded case switches available)
- Type 3R heavy gauge galv. steel enclosure with gray powdercoat RAL 7035 (stainless steel & additional colors optional)
- Color-coded series 16 cam style connectors for easy back-up generator (male) & load bank (female) connection
- Handle cover provides security from unauthorized use
- Wall mountable; leg kits are optional
- Operating instructions silkscreened on door
- Optional extended enclosure (8" deeper) for bottom conduit feed
- NEC 700.12 compliant

Drawing

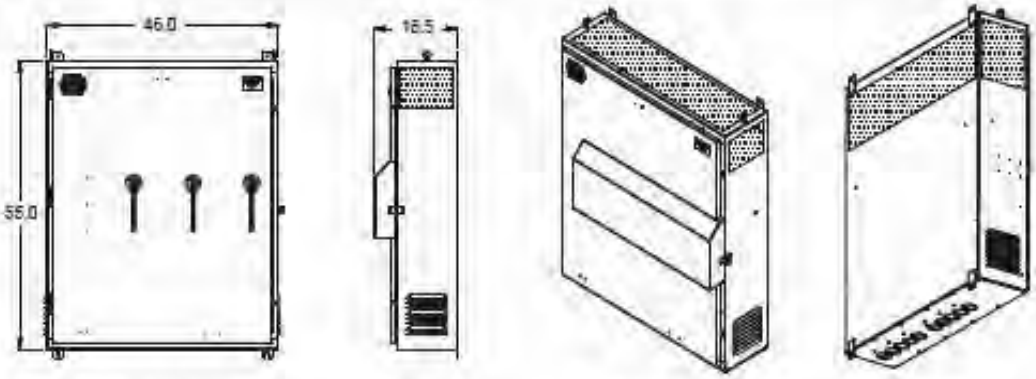

FRONT VIEW (HANDLE COVER NOT SHOWN) | SIDE VIEW | FRONT ANGLE VIEW | REAR ANGLE VIEW

Available incoming conduit entry locations shown shaded.

Approvals

- UL/cUL 1008 Listed assembly
- UL 1691 Listed receptacles
- UL 1087 Listed molded case switch
- UL 489 Listed / CSA certified molded case circuit breaker
- OSHPD seismic certification (OSP)
- ICC-ES 156 shake-table tested/certified
- IBC 2015/ASCE 7-10 compliant

Specifications

TripleSwitch 3-Way Manual Transfer Switch
Series: 3181-M

UL 1008 Listed

Ordering Information

Example: M3D8 - 800C - 800C - 800C - 208 - 311 - S - C

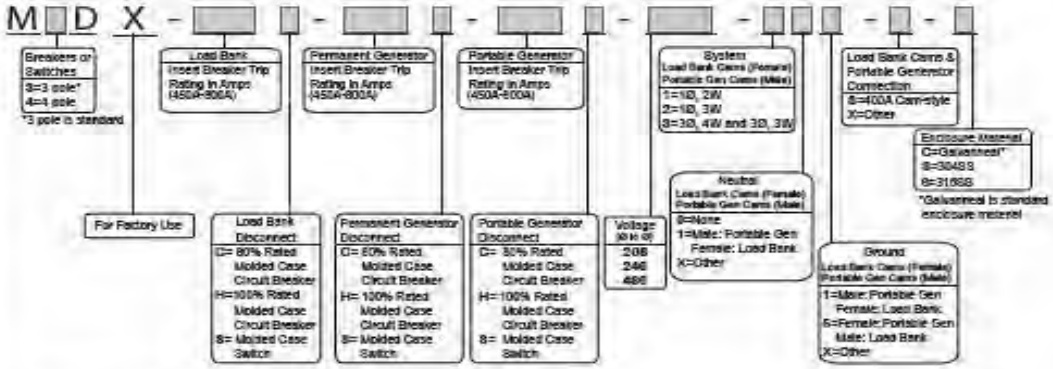

Contact factory for additional options

Ratings

Short circuit rating (breakers)	65kAIC @ 208VAC & 240VAC, 35kAIC @ 480VAC, 18kAIC @ 600VAC
Withstand rating (switches)	10kA @ 208VAC to 600VAC
Cam-style receptacles	Includes the following for both load bank & portable generator: (2) Sets of 400A, 600VAC for phase & neutral (1) 400A, 600VAC for ground
Terminals	Disconnect line terminals: (3) 3/0 - 500kcmil Load terminals: (3) 3/0 - 500kcmil Ground lug: (3) #6 - 300kcmil Neutral: (6) 3/0 - 500kcmil Other options available
Environmental	Type 3R, gasketed (Type 3RX with 304SS or 316SS option)

Packaging

Approximate product weight	540 lbs.
Approximate shipping weight	575 lbs.

400A SINGLE POLE CAM STYLE MATING PLUG (SOLD SEPARATELY)

- [redacted]
- [redacted]
- LEVITON 16 SERIES, TAPER NOSE
- [redacted]

Return to Load Bank Text Boxes

SPECIFICATIONS FOR 3-WAY MANUAL TRANSFER SWITCH WITH (2) BREAKER INTERLOCK

PART 1 – GENERAL REQUIREMENTS

1.01 **Scope:**

A. Contractor shall furnish, deliver, install and test the 3-way manual transfer switches as specified herein and in accordance with the drawings.

1.02 **Quality Assurance:**

A. 3-way manual transfer assembly switch shall be UL listed and labeled under the UL 1008 standard.

B. 3-way manual transfer switch shall be special seismic certified by OSHPD exclusively on the basis of approved shake table testing, and also certified to IBC 2015. Minimum IBC 2015 design parameters shall be as follows: Ip = 1.5, S_{DS} = 2.0g, z/h = 1.0

C. 3-way manual transfer switch manufacturer shall provide a complete factory assembled, wired and tested 3-way manual transfer switch.

D. 3-way manual transfer switch shall be factory Hi-pot tested for a period of not less than 60 seconds.

E. 3-way manual transfer switch installation shall meet all applicable NEC standards.
   1. 2017 NEC 700.3 (F) compliant when used in conjunction with an ATS and appropriate auxiliary equipment.

1.03 **Submittals:**

A. Contractor shall submit manufacturer's drawings and data of 3-way manual transfer switches for Engineer's approval prior to start of fabrication. Drawings and data shall include, as a minimum, dimensioned general arrangement drawings and wiring diagrams, UL listing information including UL file or control number, short circuit rating or withstand rating, component data, mounting provisions, conduit entry locations and installation instructions.

B. Upon installation of 3-way manual transfer switches Contractor shall submit manufacturer's Operating & Maintenance Manual which shall include as a minimum:
   1. Certified as-built General Arrangement drawings and Wiring Diagram.
   2. Materials / Component List including part numbers.
   3. Maintenance and service requirements.
   4. Certificate of Compliance and hi-pot test data.

200929

1.04 **Warranty:**

A. 3-way manual transfer switches shall be covered by manufacturer's warranty for a minimum period of (1) one year after shipment from manufacturer.

SECTION 2 - PRODUCTS

2.01 **General:**

A. All equipment shall be new.

B. 3-way manual transfer switch manufacturer must have produced and sold UL 1008 Listed manual transfer switches as a standard product for minimum of (3) years.

C. 3-way manual transfer switches shall be molded case circuit breaker type; knife switch or fused switches are not acceptable.

D. Contractor shall be responsible for the equipment until it has been installed and is finally inspected, tested and accepted in accordance with the requirements of this Specification.

E. 3- way manual transfer switches shall be TripleSwitch as manufactured by ESL Power Systems, Inc. or equal as approved by the Engineer.

2.02 **3-way Manual Transfer Switches:**

A. 3-way manual transfer switch shall consist of (2) mechanically-interlocked molded case circuit breakers, and (1) independent load bank breaker with a shunt trip (shunt trip voltage to be per the drawings), male cam-style inlet connectors, female cam-style outlet connectors, power distribution blocks and grounding terminals, all housed within a padlockable enclosure.

B. WALL-MOUNT ENCLOSURES

3-way manual transfer switch enclosure shall be Type 3R, constructed of continuous seam-welded, powder coated galvanneal steel. The main access shall be through an interlocked, hinged door that extends the full height of the enclosure. Access for both portable generator cables with female cam-style plugs and for load bank cables with male cam-style plugs shall be via a drawn flange cable entry openings in the bottom of enclosure. A hinged flap door shall be provided to cover the cable openings when cables are not connected; the hinged flap door shall allow cable entry only after the main access door has been opened. Enclosure shall be powder coated after fabrication; color shall be wrinkle gray RAL 7035.

PAD-MOUNT ENCLOSURES

3-way manual transfer switch enclosure shall be Type 3R, constructed of continuous seam-welded, powder coated galvanneal steel. The main access shall be through a hinged door that extends the full height of the enclosure. Access for both portable generator cables with female cam-style plugs and for load bank cables with male cam-style plugs shall be via a hinged lower flap door. Hinged flap door shall be provided to cover the cable openings when cables are not connected; the hinged flap door shall allow cable entry only after the main access door has been opened. Enclosure shall be powder coated after fabrication; color shall be wrinkle gray RAL 7035.

C. Cam-style male connectors (inlets) and cam-style female connectors (outlets) shall be UL Listed single-pole separable type and rated 400 amps at 600VAC. All cam-style connectors shall be color coded. Cam-style connectors shall be provided for each phase and for ground, and shall also be provided for neutral. Each of the phase cam-style connectors and the neutral cam-style connectors within the enclosure shall be factory-wired to a molded case circuit breaker. The ground cam-style male connectors shall be bonded to the enclosure, and a ground lug shall be provided for connection of the facility ground conductor. None of the cam-style connectors shall be accessible unless all (3) molded case circuit breakers are in the "OFF" position and the main access door is open.

D. A power distribution block shall be provided for load-side field wiring. The power distribution block shall be factory wired to the molded case circuit breakers.

E. Molded case circuit breakers shall be UL Listed 3-pole and the short circuit interrupt rating shall be a minimum of 35kAIC at 480VAC (wall mount units) or 50kAIC at 480VAC (pad mount units). Trip rating of the molded case circuit breakers shall be as shown on the drawings. One molded case circuit breaker shall control the connection between the permanent generator and the automatic transfer switch. A second circuit breaker shall control the connection between the permanent generator and the load bank female cam-style connectors. A third circuit breaker shall control the connection between the portable generator (via male cam-style connectors) and the automatic transfer switch. All (3) molded case circuit breakers shall include UL Listed door-mounted operating mechanisms, preventing the opening of the main access door unless all (3) breakers are in the "OFF" position. All (3) molded case circuit breakers shall be mounted behind a deadfront panel. The load-side of the molded case circuit breakers shall not be energizable unless the main access door is closed and one of the molded case circuit breakers is in the "ON" position. The (2) molded case circuit breakers controlling the connections between the permanent generator and the automatic transfer switch, and the connection between the portable generator and automatic transfer switch shall be safety interlocked by mechanical means to ensure that only one of these breakers can be closed at any given time.

F. An auxiliary contact shall be provided in the circuit breaker controlling the connection from the Permanent Generator to the ATS and shall be factory wired to terminal blocks within the enclosure. The auxiliary contact is provided in compliance with NEC 2017 700.3 (F)(5) which requires a means to activate an annunciator circuit.

SECTION 3 - EXECUTION

3.01 **Installation:**

A. Prior to installation of 3-way manual transfer switches, Contractor shall examine the areas and conditions under which the 3-way manual transfer switch is to be installed and notify the Engineer in writing if unsatisfactory conditions exist.

B. 3-way manual transfer switch shall be installed as shown on the drawings and per the manufacturer's written instructions. In addition, the installation shall meet the requirements of local codes, the National Electrical Code and National Electrical Contractors Association's "Standard of Installation".

C. Conduit entry into the 3-way manual transfer switch shall be by Contractor; Contractor shall furnish and install listed watertight conduit hubs, as manufactured by MYERS or T&B, for each conduit entry on the 3-way manual transfer switch. The incoming hub size shall match the conduit size for feeders and ground as shown on the drawings. The outgoing hub size shall match the conduit size for loads and ground as shown on the drawings. Hubs shall be properly installed and tightened to maintain Type 3R integrity of the 3-way manual transfer switch enclosure.

D. Contractor shall terminate feeder conductors, load conductors and ground per the manufacturer's instructions. All field wiring terminations shall be torqued as required per the instructions on the 3-way manual transfer switch's power distribution blocks, circuit breakers & ground lugs.

3.02 **Field Testing:**

A. Prior to energizing 3-way manual transfer switch, the Contractor shall perform the following checks and tests as a minimum:
   1. Verify mounting and connections are complete and secure.
   2. Verify internal components and wiring are secure.
   3. Perform continuity check of all circuits.
   4. Perform 1,000 VDC megger test on feeder and load cables. Prior to testing, all auxiliary circuits must be turned OFF and all fuses, microswitches and shunt trip circuits must be disconnected. It is required to take out the rating plug of any electronic trip circuit breakers while performing a megger (insulation) test.
   5. Verify deadfront is secure.
   6. With the 3-way manual transfer switch deadfront in place and the main access door closed and properly latched, actuate all (3) Operator Mechanisms; verify:
      A). With the breaker controlling the connection between the permanent generator and the automatic transfer switch (ATS) in the "ON" position, the breaker controlling the connection between permanent generator and the load bank can be turned to the "ON" and "OFF" position and the breaker controlling the connection between the

portable generator and the automatic transfer switch cannot be turned "ON"

B) With the breaker controlling the connection between the permanent generator and the automatic transfer switch (ATS) in the "OFF" position, the other (2) breakers controlling the connection between the permanent generator and load bank can be turned "ON" or "OFF", and the breaker controlling the connection between the portable generator and the automatic transfer switch can be turned "ON" and "OFF"

C) With the breaker controlling the connection between the portable generator and the automatic transfer switch (ATS) in the "ON" position, the breaker controlling the connection between the permanent generator and the automatic transfer switch (ATS) cannot be turned "ON" and the breaker controlling the connection between the permanent generator and load bank can be turned "ON" and "OFF".

7. Confirm operation of the 3-way manual transfer switch ground receptacle by attaching a plug to the 3-way manual transfer switch ground receptacle and then verify that the plug is grounded to the facility ground.
8. Once normal power has been applied, confirm operation of 3-way manual transfer switch by following directions on main access door.

End of Section

HAMPTON ROADS SANITATION DISTRICT
Electrical Department
2391 G Avenue
Newport News, VA 23602
Phone: 757-833-1702
Fax: 757-875-0273

Drive Specifications:
Date: 09-10-15

Variable Frequency Drive w/ Waste Water Package

1.) Horsepower: _____
2.) Full Load Amps: _____
3.) _____ VAC, Three Phase, 60 Hertz, with internal DC Link Choke and Line Reactor.
4.) NEMA 12 free standing enclosure, 90" x 36" x 20" with viewing window and positive pressure blower & filter. Viewing window shall be made by Tegam (www.tegam.com- Item# AWXXXX). Also note, width may vary depending on air exchanges needed for correct cooling factor and/ or dimension of the VFD.
Tegam windows are not required if the VFD's are installed in a controlled environment.
5.) Door mounted digital keypad operator
6.) Fully NEMA rated door interlocking circuit breaker approved for thermal & magnetic trips. ***IEC or DUAL RATED NOT ACCEPTED.***
7.) Fully NEMA rated three contactor by-pass configuration fully rated for continuous drive operation. Also, shall operate automatically when in the by-pass position. ***IEC or DUAL RATED NOT ACCEPTED.***
8.) NEMA rated – "Drive/ Off/ By-Pass" and "Test/Off/Run" selector switches.

9.) NEMA Rated- "Manual/Auto" selector switch programmed for a voltage (manual) and current (auto) input. Additional contact on "Auto" side of switch to provide closure in auto mode and wired to terminal on drive.

10.) Door mounted ~~Yokogawa elapsed time meter Model # 240311AAAB7 120~~ VAC non- resettable. Crompton elapsed time meter is UL listed

11.) 4-20 MADC speed reference for input and output signals.

12.) NEMA rated speed potentiometer mounted on door for manual speed control.

13.) Isolation form "C" relay TPDT for each "Run", "Fault" and "Man/ Auto" status.

14.) Enclosure shall be manufactured by Hoffman.

15.) Control transformer should be ***1,000 VA or larger*** based on control needs in cabinet.

16.) Auxiliary contact for cabinet cooling fans to be form "C" relay TPDT and controlled from Run Status contacts of VFD.

17.) Cooling air fans shall be sized to provide correct air exchanges in cabinet to maintain temperature in cabinet below VFD rating.

18.) Extended 5 year warranty must be included.

19.) The assembly shall be listed per UL508 and 508A or equivalent NRTL standard. The entire assembly shall be affixed with UL508A label prior to shipment.

20.) Application specific - evaluate need for soft start for bypass for 100 HP motors or greater.

21.) Door mounted cradle for controller that could be removed and connected via (3m or 9ft) cable so that drive can be operated outside of the arc flash boundary.

Note for Vendor:

1.) Must visit the site to verify that equipment ordered is correct for operation.

2.) Drawings for approval are required to be submitted to HRSD Electrical Department.

3.) Items 6 & 7 shall be approved NEMA rated Cutler-Hammer, Allen-Bradley or Square D. Or other manufacture NEMA rated with written approval by the HRSD site.

4.) All switches and lights shall be heavy duty NEMA Rated Cutler-Hammer or Allen-Bradley 30mm.

5.) All switches, lights and keypad shall be mounted inside of viewing window on door. If applicable

6.) All spare relay contacts should be wired to terminal blocks.

7.) Fault relay should be controlled from Normally Closed (N.C.) contacts of VFD MB & MC Terminals and to be wired after Overload (O/L) contacts on drawing.

8.) All VFD's will be shipped attached Horizontally on pallets and with sufficient protection for the switches, lights and On/Off breaker.

9.) ***THERE SHALL BE NO IEC OR DUAL RATED NEMA DEVICES ACCEPTED.***
Examples: Lights, position switches, circuit breakers, contactors and speed potentiometer.

Mount Thermostat above or close to the VFD. Not at the bottom of the cabinet

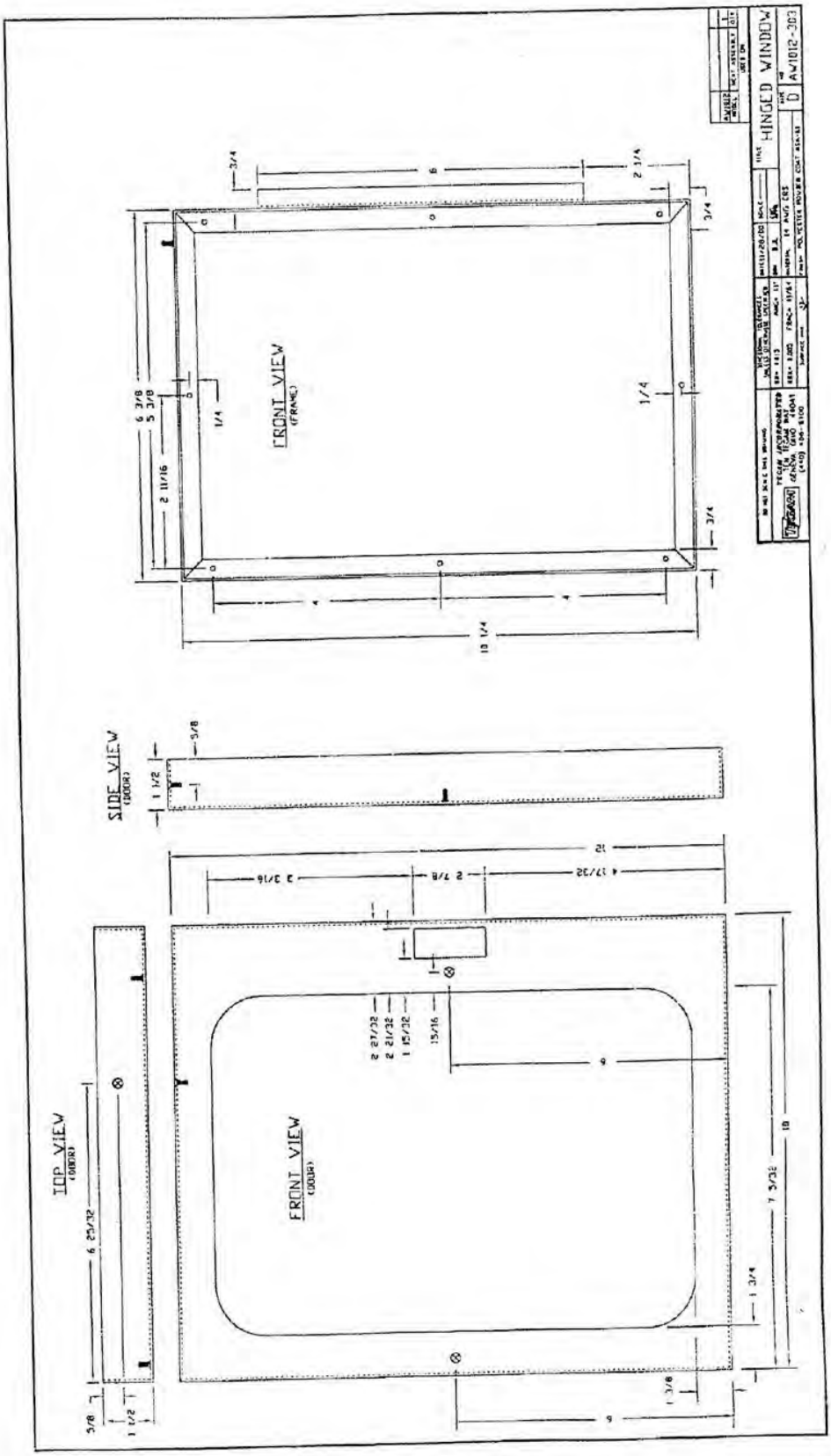
FRONT VIEW
(FRAME)
SIDE VIEW
(DOOR)
TOP VIEW
(DOOR)
FRONT VIEW
(DOOR)
HINGED WINDOW
AW1012-303

Technical Memorandum

VFD Harmonic Mitigation

To:
Laura Kirkwood, PE, HRSD

Issued By:
Mike Gaffney, PE, RK&K
Ryan Delo, PE, RK&K
Tim Bollinger, PE, RK&K
Jason Hoyt, RK&K

Date:
June 12, 2018

Program Name:
Hampton Roads Sanitation District
Chesapeake Elizabeth Interceptor System Diversion Improvements

Subject:
Technical Memorandum to Provide Harmonic Mitigation Recommendation for Variable Frequency Drives at Pressure Reducing Stations

Introduction

It is our experience variable frequency drives (VFDs) operating motors 100HP or larger benefit from harmonic filters to reduce the effects of harmonic distortion. Harmonic distortion can increase generator sizing, reduce equipment life expectancy, and reduce the efficiency of the power system ultimately resulting in higher operation and maintenance costs. HRSD's standard Yaskawa A1000 VFD with a line reactor reduces the harmonic distortion, but it is estimated the total distortion will be greater than the limits recommended by IEEE-519. See **Figure 1** below for the IEEE-519 recommended limits, and **Figure 2** for the harmonic estimation of HRSD's standard configuration.

Harmonic Mitigation Options

There are two options for mitigating the harmonics generated by the VFDs. The first option for harmonic mitigation is to add a passive harmonic filter. A passive harmonic filter may be added to HRSD's standard configuration. Adding a passive harmonic filter will reduce the effects of harmonic distortion within the limits recommended by IEEE-519, see **Figure 3** for the harmonic estimation. This option will increase the foot print of the drive enclosure, additional labor will be required for wiring, and additional ventilation will be required for heat dissipation.

The second option for harmonic mitigation is to utilize the Yaskawa U1000 Matrix VFD. The Yaskawa U1000 Matrix VFD will replace the Yaskawa A1000 VFD and line reactor. Use of the Yaskawa U1000 Matrix VFD will reduce the effects of harmonic distortion within the limits recommended by IEEE-519, see **Figure 4** for the harmonic estimation. This option will not impact the foot print of the drive enclosure, labor for

wiring will be reduced because the line reactor is no longer required, and additional ventilation will not be required for heat dissipation.

Either option will increase the cost an estimated $25,000 per drive, based on powering a 215 hp motor.

Recommendation

Of the options available for harmonic mitigation we recommend the Yaskawa U1000 Matrix VFD be used as the standard variable frequency drive for all motors 100HP and larger. Use of the Yaskawa U1000 Matrix VFD will reduce the effects of harmonic distortion to within the limits recommended by IEEE-519, eliminate the need for a line reactor and passive harmonic filter, and reduce the foot print of the drive enclosure compared to a variable frequency drive panel with a line reactor and passive harmonic filter. The Yaskawa A1000 VFD uses the typical AC to DC conversion, then DC to variable AC pulse width modulated (PWM) waveform for speed control. The Yaskawa U1000 Matrix VFD reduces harmonics by AC to AC operation with the use of 9 bi-directional insulated-gate bipolar transistors (IGBTs) for speed control. In addition to the low harmonics of the Yaskawa U1000 Matrix VFD the use of bi-directional IGBTs allows the variable frequency drive to handle continuous power regeneration.

Aside from the advantages listed above for the Yaskawa U1000 Matrix VFD, the variable frequency drive has the same user interface and terminal layout as the Yaskawa A1000 VFD, eliminating the need for any additional operator training for the set-up and programming of the VFD.

Allen Bradley manufactures the PowerFlex 755TL VFD capable of reducing harmonics. While an extensive evaluation of this drive was not completed (as it is not the model indicated in HRSD's Preferences) as part of this technical memorandum, this alternative may be worthy of evaluation to determine suitability for installation in the pressure reducing stations.

Figure 1. IEEE-519 (2014) Limits

IEEE-519 (2014)

Current Distortion Limits

Harmonic Current Distortion Limits for general distribution systems (120V through 69kV)

Isc/IL	TDD
<20	5.0 %
20 - 50	8.0 %
50 - 100	12.0 %
100 - 1000	15.0 %
> 1000	20.0 %

TDD = Total Demand Distortion, in percent of IL
Isc = Maximum short circuit current at PCC (Point of Common Coupling)
IL = Maximum demand load current at PCC (Point of Common Coupling)

Voltage Distortion Limits

Bus voltage V at PCC	THD
V <= 1.0 kV	8.0 %
1 kV < V <= 69 kV	5.0 %
69 kV < V <= 161 kV	2.5 %
161 kV < V	1.5 %

Figure 2. Harmonic Estimation with a Yaskawa A1000 VFD and Line Reactor

Project: Providence Road PRS

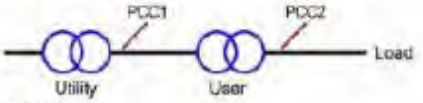

Linear: 15 HP

Non-Linear: 860 HP

Utility: Dominion Energy

Source Data I

Source	Frequency (Hz)	Rating (kVA)	Impedance Z (%)	Sec. Voltage (V)	Isc (A)
Utility XFMR	60	50,000	8.00	13,800	26,148
User XFMR	60	1,500	5.75	480	31,378

Source Data II

Source	Rated Amps, rms (A)	Amps Fundamental (A)	Amps Harmonics (A)	Total Amps (A)
Utility XFMR	2,092	30.9	8.6	32.1
User XFMR	1,804	889.7	247.4	923.5

Harmonic Summary

Location	Current TDD (%)	Voltage TDD (%)	Isc/Load	Transformer Load (%)
PCC2	27.8	4.7	35.3	56.7

IEEE-519 (2014) limits at PCC2 for specified system based on Isc/IL: Voltage THD: 8.0 %, Current TDD: 20.0 %

Project Compliance

Location	IEEE-519 (2014)	IEC
PCC2	No	No

Figure 3. Harmonic Estimation with a Yaskawa A1000 VFD and Passive Filter

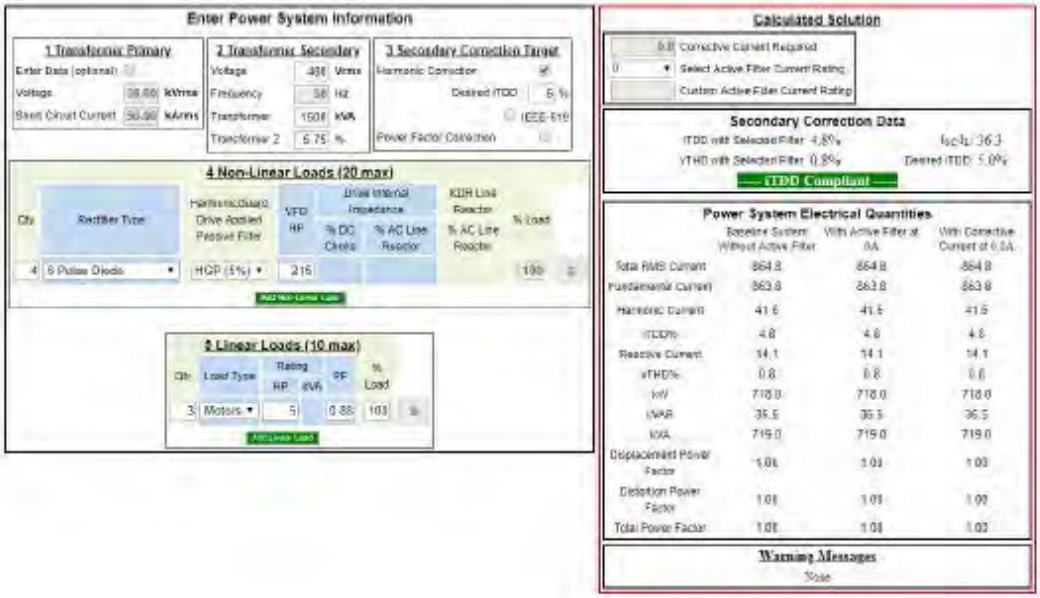

Figure 4. Harmonic Estimation with a Yaskawa U1000 Matrix VFD

Project: Providence Road PRS

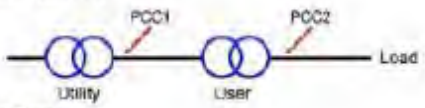

Linear: 15 HP

Non-Linear: 860 HP

Utility: Dominion Energy

Source Data I

Source	Frequency (Hz)	Rating (kVA)	Impedence Z (%)	Sec. Voltage (V)	Isc (A)
Utility XFMR	60	50,000	8.00	13,800	26,148
User XFMR	60	1,500	5.75	480	31,378

Source Data II

Source	Rated Amps, rms (A)	Amps Fundamental (A)	Amps Harmonics (A)	Total Amps (A)
Utility XFMR	2,092	30.9	0.9	31.0
User XFMR	1,804	889.7	25.0	890.1

Harmonic Summary

Location	Current TDD (%)	Voltage TDD (%)	Isc/Load	Transformer Load (%)
PCC2	2.9	1.2	35.3	49.9

IEEE-519 (2014) limits at PCC2 for specified system based on Isc/IL: Voltage THD: 8.0 %, Current TDD: 8.0 %

Project Compliance

Location	IEEE-519 (2014)	IEC
PCC2	Yes	Yes

Click here to return to VFH (AUX) (PSs)

Click here to return to VFD (AUX) (TPs)

Application Paper

Effective November 2013

Safety Switches with Variable Frequency Drives

Introduction

The National Electrical Code® (NEC®) requires that a disconnecting means shall be located in sight from the motor location and the driven machinery location (Article 430.102(B)). The NEC® defines "in sight" as visible and not more than 50 feet (15.24 m) distant (Article 100 – definitions).

In many cases, motor starters will be located in another space then the motor and to meet code requirements, a safety switch is used to add a way to disconnect and lockout a motor. When an across the line starter is used, this won't cause an issue, but it can cause issues with a Variable Frequency Drive. When a motor is running with a VFD and is turned off at the safety switch, the VFD does not have a way of sensing that the motor load has dropped off completely in V/Hz control. The drive is designed to supply as much voltage as the motor is demanding and it would not be uncommon for the motor to not require any power once the load is moving due to inertia. Because of this, the VFD will continue to function and run as it normally would even though the load has been disconnected. When the safety switch is closed again, the VFD will function like an across the line starter and an enormous amount of inrush current will be generated and pulled through the drive.

Across the line starters are designed to handle these large current spikes for a short amount of time, but a VFD is meant to be used to ramp up and down the speed of a motor. Until recently, this inrush current could cause the IGBTs to fail and require complete replacement which can be very costly due to down time and the process being very labor intensive. A way to prevent these issues is to provide feedback from the safety switch back into the VFD that the switch has been opened and the VFD should stop running.

As a standard, safety switches are simple devices that cut off power to the motor, however, they have additional options including an auxiliary contact that will change states when the switch is changed. There are multiple ways to tie this back into the VFD to prevent it from running, but the two most common ways are to use it as a lockout contact that is wired into the RUN input of the drive or a Normally Closed contact is wired into the EXTERNAL FAULT input on the drive. Each method will be discussed in more detail below.

Interlocking with RUN signal

Eaton provides terminal blocks to interlock an external signal to the RUN input as a standard on all Enclosed VFD Assemblies. From the factory, these terminal blocks come jumpered as in most cases this interlock signal is not required. This makes interlocking your safety switch as easy as running two wires from the safety switch into the VFD enclosure that are rated for 120Vac.

In the case that an open component VFD is being used or the drive was installed into an enclosure by a local panel builder, it will take some rewiring to interlock the VFD with the Safety Switch. Figure 1 below shows a simplified wiring scheme. By wiring a Normally Open Contact from the Safety Switch in series with the VFD's RUN Input, the drive will only be allowed to RUN when the switch is closed.

EATON

Powering Business Worldwide

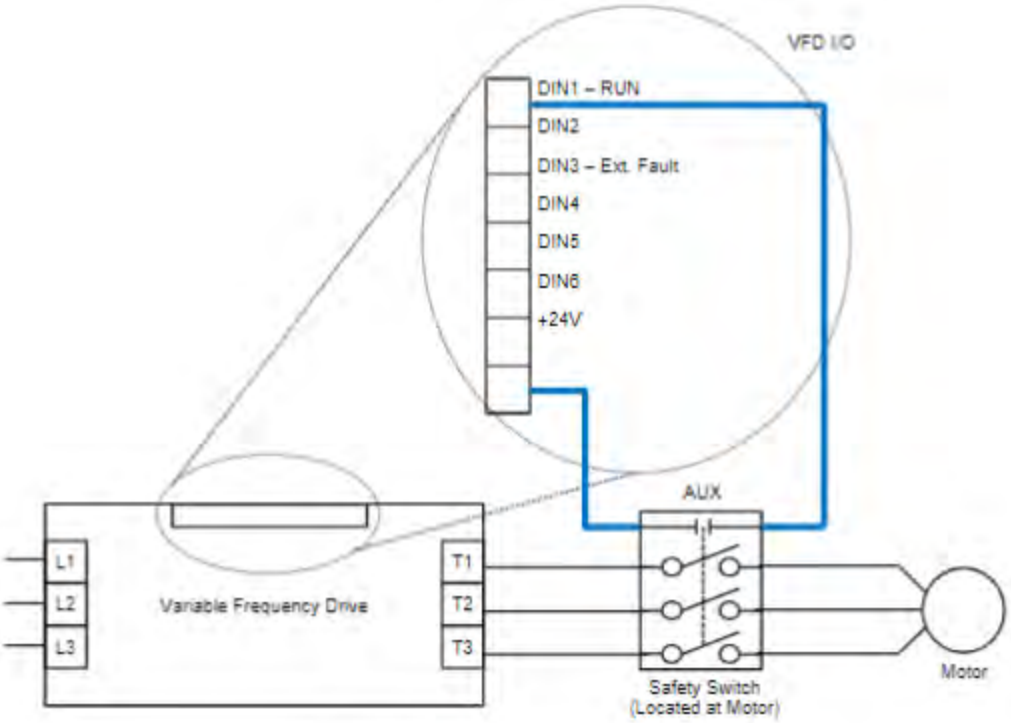

Figure 1 – Interlocking with the VFD RUN input

One of the main advantages of going this route is that the VFD will start to run again as soon as the Safety Switch is put back into the closed position. In the case where you don't have a local control station near the motor, this will save some time from having to go back to the main VFD to reset it to allow the unit to start back up. Some people would prefer that the motor needs to be manually restarted again in which case interlocking the Safety Switch with the VFD EXTERNAL FAULT input is a better solution.

Interlocking with EXTERNAL FAULT signal

Wiring into the EXTERNAL FAULT input on the drive is a less common way of interlocking the Safety Switch with the VFD, but it will provide similar results. Figure 2 below shows a simplified wiring scheme on how to do this. By wiring a Normally Closed Contact from the Safety Switch in series with the VFD's EXTERNAL FAULT Input, the drive will register a Fault anytime the Switch is opened, causing the VFD to shut down.

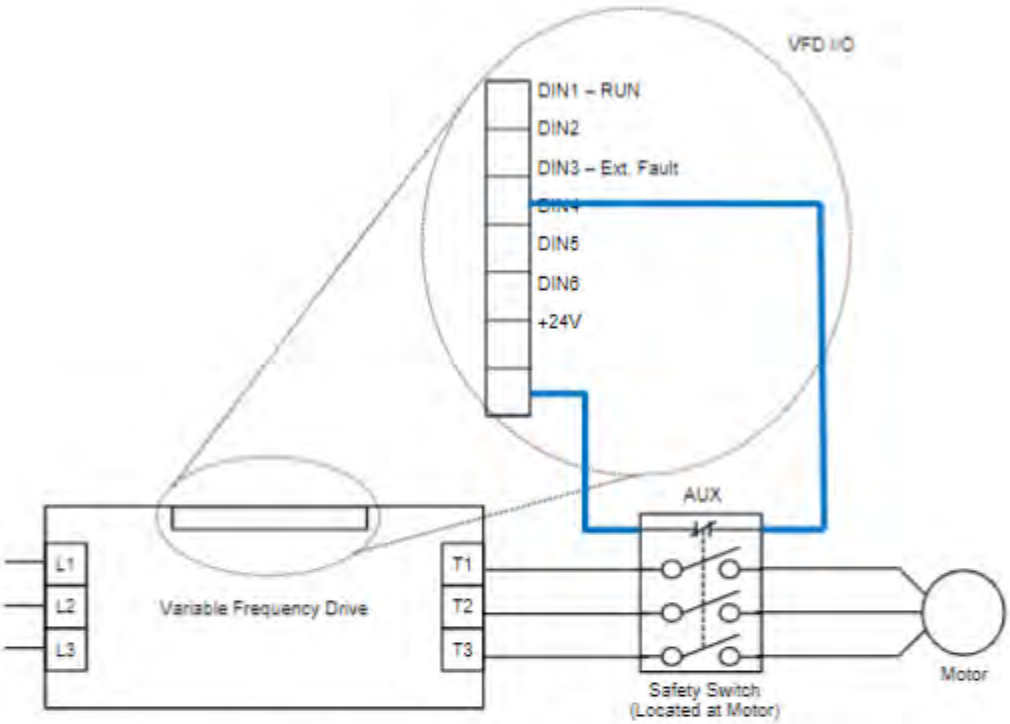

Figure 2 – Interlocking with the VFD EXTERNAL FAULT Input

External Faults are typically looking for low signals to prevent issues with wires coming lose and faults not registering. In this case, as soon as the motor's power is cut at the safety switch, the drive will register an External Fault which cannot be cleared until the Safety Switch is closed again. The Drive can then be reset locally at the keypad or through a remote reset button with is wired into a RESET input on the VFD. The reset can also be done over the communication bus as well.

Additional Help

In the US or Canada: please contact the Technical Resource Center at 1-877-ETN-CARE or 1-877-326-2273 option 2, option 6.

All other supporting documentation is located on the Eaton web site at www.eaton.com/Drives

Eaton
1000 Eaton Boulevard
Cleveland, OH 44122 USA
Eaton.com

© 2013 Eaton
All Rights Reserved
Printed in USA
Publication No. AP040187EN
November 2013

Eaton is a registered trademark.

All other trademarks are property of their respective owners.

Click here to return to Lighting (PSs)

Exhibit D

Click here to return to Lighting (TPs)

HRSD Lighting Guidelines Rev. 092718

The purpose of these guidelines is to provide direction for sustainable lighting solutions to meet the needs of facilities and help accomplish the Mission and Vision of HRSD.

Sustainable lighting meets the qualitative needs of the visual environment with the least impact on the physical environment.

- **Sustainable lighting elements**
  - Optimize use of daylight
  - Minimize use of energy
  - Reduce light pollution and light trespass
  - Minimize embodied environmental effects
  - Specify environmentally preferable materials and equipment
  - Ensure system quality, flexibility, adaptability, maintainability and durability
  - Provide staff orientation and training

I. Qualitative needs

- Support work
  - Productivity, safety, security
- Regulatory
  - Minimum required light levels maintained
- Human Centric
  - The psychological wellbeing, interest, and enthusiasm of people.

II. Optimize use of daylight

- Daylight can provide potential benefits in terms of health, performance, or general well being
- Minimize electric lighting, turn off (or down) in response to daylight
  - Simple solution: Photo-sensor, controller, step-dimming ballast (bi-level option) for fixture retrofit
  - Optional feature for occupancy/vacancy sensors- Built in photo-sensor- Inhibits room lights from turning on when there is sufficient daylight present

III. **Minimize use of energy**

- Integrated design
  - Optimize integration with daylighting
- Appropriate, high quality design
  - Appropriate light levels, noticeable improvement
- Effective controls
  - To reduce kWh by turning off lighting
    - Switching controls
  - To reduce kW by turning down lighting
    - Dimming controls

IV. **Reduce light pollution and light trespass**

- Light pollution is:
  - Unnecessary, unwanted or wasted light
  - Light that damages or degrades the nighttime luminous environment
  - Light that negatively impacts humans, animals or plants
- Sustainability issue because:
  - Affects use of energy & enjoyment of natural nighttime sky
- Light Trespass
  - Obtrusive light that crosses a property line
  - Difficult to quantify
    - When, where & how much light is unwanted
- Can be avoided by:
  - Aiming lights down
  - Choosing fixtures with hoods, visors, or shields
  - Installing motion sensors to turn off lights when not needed
  - Use lowest wattage lamp to do the job
  - Lighting should not be overly bright in relation to the surrounding area.
  - B.U.G. rating of fixture, Back, Up, Glare.

V. **Minimize embodied environmental effects**

- Total energy required to produce a product, service or material including all life cycle phases from raw extraction to end of life
  - Includes manufacturing, packaging, transportation, installation, recycling
- Buy American (locally)
  - Minimize transportation
- Retrofit vs. Re-lighting (w/new fixtures)

        - Retrofit uses less material (often w/ lamps & ballasts or LED retrofit kits only)

VI. **Specify environmentally preferable materials and equipment**

- Lighting equipment manufacturers demonstrating their commitment to environmental responsibility with improvements to manufacturing.
- RoHS COMPLIANCE
    - Reduction of Hazardous Substances Directive
    - Aims to restrict certain dangerous substances commonly used in electronic equipment

VII. **Ensure system quality, flexibility, adaptability, maintainability and durability**

- Quality
    - Lighting that positively addresses human needs, architecture, economics, energy and the environment.
- Flexibility
    - To extend useful life of facility & better serve user's changing needs
        - Ex: Flexible lighting controls, such as wireless
        - Ex: Flexible wiring systems
- Adaptability
    - Should anticipate change to allow system reconfiguration and reuse in future remodeling
        - LED's improving Lumens Per Watt at 20% a year
        - Ex: Lighting controls – reprogram for new space uses
        - Ex: Lighting controls – wireless
- Maintainability & Durability
    - Lighting systems that perform the longest with the least maintenance effort have best economic and environmental value
        - SSL equipment & LED bulbs – lowest life-cycle cost
        - Long-life lamps have great value
        - Ex: Standardizing and minimizing the number of different lamp types reduces inventory and maintenance labor

VIII. **Provide staff orientation and training**

- Ensures operation and maintenance

IX. **Lighting Metrics**

- Provides a means to make comparisons between various lighting sources
    - Lumens-Total amount of light emitted by a source in all directions
    - Lumens Per Watt-Measure of light source energy efficiency

- CRI- Color Rendering Index is the measurement of how colors look under a light source when compared with sunlight. The index is measured from 0-100, with a perfect 100 indicating that colors under the light source appear the same as they would under natural sunlight.
- CCT- Correlated Color Temperature, measured in degrees Kelvin, refers to the amount of orange vs blue hue to the white light. "Warm" Light has a more orange hue vs. "Cool" light, which has a more bluish tint to it.
- Foot Candles- Measurement of total quantity of light falling on a square foot of a surface. This measurement is useful because working conditions are often specified in foot candles.

X. Warranties

- Unfortunately, there are still a number of unproven products and manufacturers out there that are causing challenges for both consumers and the industry.
- Half of new businesses last less than 5 years.

XI. Reference Resources

- Department Of Energy (DOE)
  - Caliper Reports
- DesignLights Consortium (DLC)
  The DesignLights Consortium® (DLC) is a non-profit organization dedicated to accelebrating the widespread adoption of high-performing commercial lighting solutions. The DLC promotes high-quality, energy-efficient lighting products in collabo- ration with utilities and energy efficiency program members, manufacturers, lighting designers, and federal, state, and local entities. Through these partnerships, the DLC establishes product quality specifications, facilitates thought leadership, and provides information, education, tools and technical expertise.

- Illuminating Engineering Society (IES)

- Occupational Safety and Health Administration (OSHA)

- International Dark Sky Association (IDA)
  IDA is non-profit, tax-exempt, membership-based organization to help preserve & restore dark skies while maximizing the quality and efficiency of nighttime outdoor lighting.

XLIV. **A Practical Guide for Choosing the Appropriate LED Lighting**

There's More to It Than Just Lumens Per Watt

General

- Deplete existing parts inventory
- Plan for future network connectivity
- Use motion activating controls with overrides
- Color Rendering (CRI) Index of 80 or greater
- Correlated Color Temperature (CCT) 3500-4000K, Exterior
- Correlated Color Temperature (CCT) 4000K and above, Interior
- Consider glare use diffuser and or indirect fixture
- Consider vertical and up-light levels of illumination
- Consider light trespass and pollution, Exterior
- Ask for photo metrics of fixtures

Recommendations

- LED replacement tubes and cob lamps (plug and play) are not recommended due to safety and efficiency concerns.
- New fixtures designed around the LED light source are recommended.
- LED fixture retrofits are an option if more feasible than new fixture.
- Buy a few or ask vendor to supply fixtures for a temporary trial
- Use a light meter and record foot-candle readings horizontal and vertical before and after changes

Difficult Access Areas

  - Replace with LED fixture

Outside / Exterior Lighting

- High Mast Lighting
  - No new installations, Install LED Street lighting
  - Replace with LED fixture
  - Consider light trespass and pollution

- Street Lighting/Building Exterior
  - LED replacement cob lamps not recommended due to safety and efficiency concerns
  - Low and High Pressure Sodium- replace with LED
  - Metal Halide- replace with LED
  - Incandescent/Halogen- replace with LED
  - Consider light trespass and pollution

Fluorescent Lighting

- LED replacement tubes not recommended due to safety and efficiency concerns
- Existing T-12, Fixtures 8’0
  - Retrofit with LED kit or replace with new LED fixture preferred
  - Consider vertical levels of illumination
  - Consider glare, use indirect or diffuser
- Existing T-12, Fixtures 4’0
  - Retrofit with LED kit or replace with new LED fixture preferred
  - Consider vertical levels of illumination
  - Consider glare, use indirect or diffuser

Hazardous (Classified) Areas, PTF, Wet Well, Digester etc.

- Replace with LED fixture rated for specific conditions, Class and Division
  - Correlated Color Temperature (CCT) 4000K and above
  - Color Rendering (CRI) Index of 90 or greater
  - Consider vertical and uplight levels of illumination
  - Consider glare, use diffuser

Click here to return to Motor Specs (PSs)

Click here to return to Motor Specs (TPs)

Exhibit E

HRSD ELECTRIC MOTOR SPECIFICATIONS

The following specifications shall be used for the purchase of new motors.

A. The motor shall meet or exceed the efficiency levels from NEMA MG1 Table 12-11 which comply with levels set by The Energy Policy Act and Conservation Act (EPCA), as amended by the Emergency and Security Act of 2007 (EISA). See NEMA MG1 Table 12-11.

B. The motor efficiency shall be determined using the test standards found in IEEE Standard 112-2004, Standard Test Procedure for Polyphase Induction Motors and Generators, or by other internationally accepted methods.

C. The motor shall be properly sized for the given load.

D. The motor shall be Totally-Enclosed, Fan-Cooled (TEFC), unless noted. Open Drip Proof (ODP) is acceptable in cases where TEFC is not available.

E. The motor shall have a minimum service factor of 1.15.

F. The motor shall have a minimum insulation class of F.

G. Motors used with variable frequency drives shall be examined for inverter duty motor applicability.

H. The following parameters shall be specified for the motor:

1. Motor horsepower
2. Voltage
3. Full load amps
4. Speed
5. Frequency
6. Phase
7. Shaft size
8. Environmental conditions (ambient operating temperature range, humidity level, etc.)
9. Starting torque (loaded or unloaded)
10. Classification of hazard (explosion proof, non-explosion proof, etc.)
11. Special equipment requirements (thermal protection, space heaters for outside, wet or high humidity area, standard or nonstandard conduit boxes, etc.)
12. Maximum number of starts per day/per hour
13. High temperature grease (for special cases, if required)

I. Where a Contractor is required to coat a motor, the motor shall be coated with an industrial enamel at a thickness of 5 mil D.F.T. The coating color shall be gray, U.S. Government Federal Register 595 Paint Color Number 16473.

NEMA MG1 Table 12-11
Motor Efficiencies

OPEN MOTORS

HP	FULL-LOAD EFFICIENCIES OF ENERGY EFFICIENT MOTORS							
	Nominal Efficiency 2 POLE	Minimum Efficiency 2 POLE	Nominal Efficiency 4 POLE	Minimum Efficiency 4 POLE	Nominal Efficiency 6 POLE	Minimum Efficiency 6 POLE	Nominal Efficiency 8 POLE	Minimum Efficiency 8 POLE
1	…	…	82.5	80.0	80.0	77.0	74.0	70.0
1.5	82.5	80.0	84.0	81.5	84.0	81.5	75.5	72.0
2	84.0	81.5	84.0	81.5	85.5	82.5	85.5	82.5
3	84.0	81.5	86.5	84.0	86.5	84.0	86.5	84.0
5	85.5	82.5	87.5	85.5	87.5	85.5	87.5	85.5
7.5	87.7	85.5	88.5	86.5	88.5	86.5	88.5	86.5
10	88.5	86.5	89.5	87.5	90.2	88.5	89.5	87.5
15	89.5	87.5	91.0	89.5	90.2	88.5	89.5	87.5
20	90.2	88.5	91.0	89.5	91.0	89.5	90.2	88.5
25	91.0	89.5	91.7	90.2	91.7	90.2	90.2	88.5
30	91.0	89.5	92.4	91.0	92.4	91.0	91.0	89.5
40	91.7	90.2	93.0	91.7	93.0	91.7	91.0	89.5
50	92.4	91.0	93.0	91.7	93.0	91.7	91.7	90.2
60	93.0	91.7	93.6	92.4	93.6	92.4	92.4	91.0
75	93.0	91.7	94.1	93.0	93.6	92.4	93.6	92.4
100	93.0	91.7	94.1	93.0	94.1	93.0	93.6	92.4
125	93.6	92.4	94.5	93.6	94.1	93.0	93.6	92.4
150	93.6	92.4	95.0	94.1	94.5	93.6	93.6	92.4
200	94.5	93.6	95.0	94.1	94.5	93.6	93.6	92.4
250	94.5	93.6	95.4	94.5	95.4	94.5	94.5	93.6
300	95.0	94.1	95.4	94.5	95.4	94.5	…	…
350	95.0	94.1	95.4	94.5	95.4	94.5	…	…
400	95.4	94.5	95.4	94.5	…	…	…	…
450	95.8	95.0	95.8	95.0	…	…	…	…
500	95.8	95.0	95.8	95.0	…	…	…	…

NEMA MG1 Table 12-11
Motor Efficiencies

ENCLOSED MOTORS

HP	FULL-LOAD EFFICIENCIES OF ENERGY EFFICIENT MOTORS							
	Nominal Efficiency 2 POLE	Minimum Efficiency 2 POLE	Nominal Efficiency 4 POLE	Minimum Efficiency 4 POLE	Nominal Efficiency 6 POLE	Minimum Efficiency 6 POLE	Nominal Efficiency 8 POLE	Minimum Efficiency 8 POLE
1	75.5	72.0	82.5	80.0	80.0	77.0	74.0	70.0
1.5	82.5	80.0	84.0	81.5	85.5	82.5	77.0	74.0
2	84.0	81.5	84.0	81.5	86.5	84.0	82.5	80.0
3	85.5	82.5	87.5	85.5	87.5	85.5	84.0	81.5
5	87.5	85.5	87.5	85.5	87.5	85.5	85.5	82.5
7.5	88.5	86.5	89.5	87.5	89.5	87.5	85.5	82.5
10	89.5	87.5	89.5	87.5	89.5	87.5	88.5	86.5
15	90.2	88.5	91.0	89.5	90.2	88.5	88.5	86.5
20	90.2	88.5	91.0	89.5	90.2	88.5	89.5	87.5
25	91.0	89.5	92.4	91.0	91.7	90.2	89.5	87.5
30	91.0	89.5	92.4	91.0	91.7	90.2	91.0	89.5
40	91.7	90.2	93.0	91.7	93.0	91.7	91.0	89.5
50	92.4	91.0	93.0	91.7	93.0	91.7	91.7	90.2
60	93.0	91.7	93.6	92.4	93.6	92.4	91.7	90.2
75	93.0	91.7	94.1	93.0	93.6	92.4	93.0	91.7
100	93.6	92.4	94.5	93.6	94.1	93.0	93.0	91.7
125	94.5	93.6	94.5	93.6	94.1	93.0	93.6	92.4
150	94.5	93.6	95.0	94.1	95.0	94.1	93.6	92.4
200	95.0	94.1	95.0	94.1	95.0	94.1	94.1	93.0
250	95.4	94.5	95.0	94.1	95.0	94.1	94.5	93.6
300	95.4	94.5	95.4	94.5	95.0	94.1	…	…
350	95.4	94.5	95.4	94.5	95.0	94.1	…	…
400	95.4	94.5	95.4	94.5	…	…	…	…
450	95.4	94.5	95.4	94.5	…	…	…	…
500	95.4	94.0	95.8	95.0	…	…	…	…

Click here to return to Level Sensing Systems (PSs)

Exhibit F

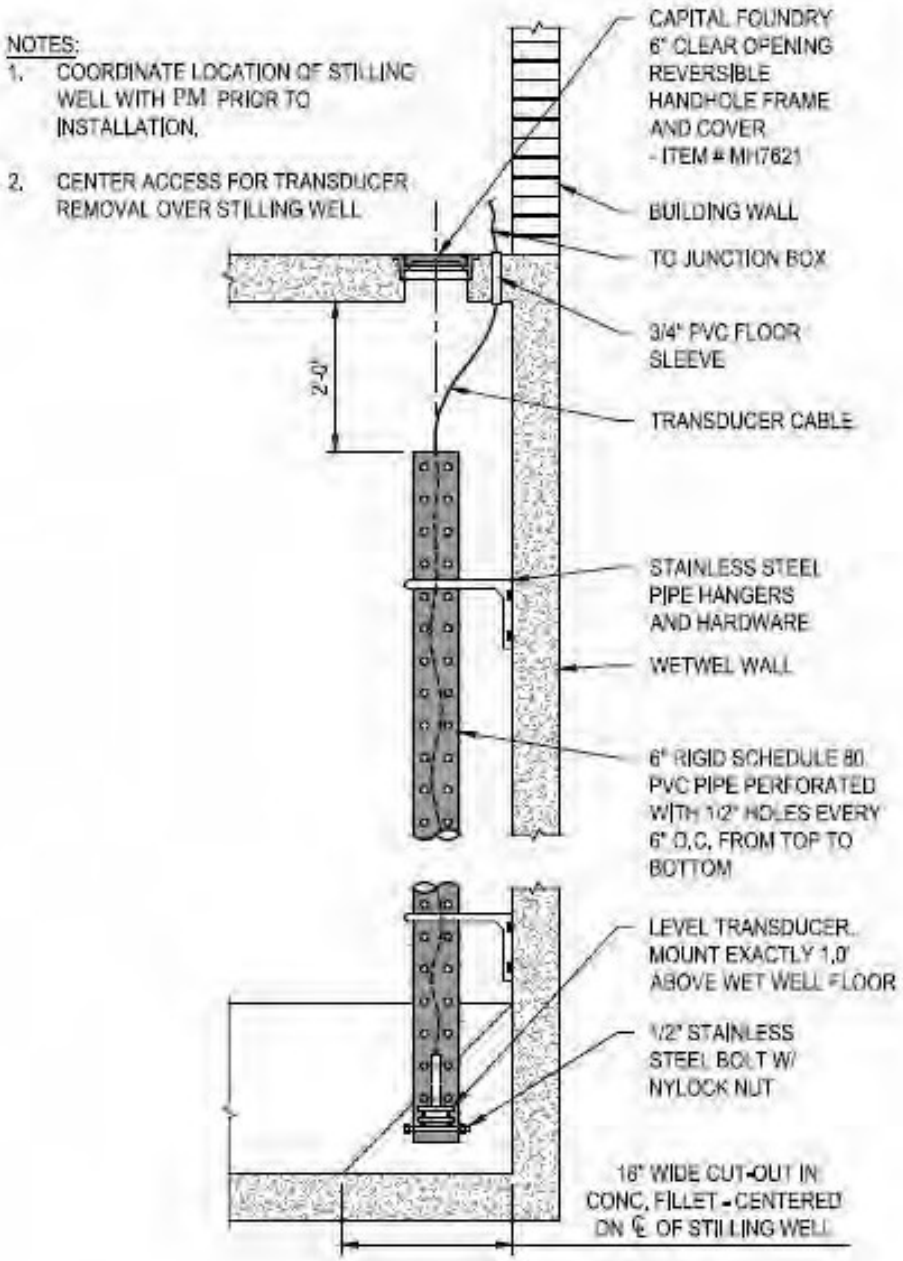

Stilling Well for Level Transducer

Pumping Station or Treatment Plant

Click here to return to Alarm Systems (PSs)

Exhibit G

Temporary Portable Pump Alarms and Setup Standards

When a project requires a temporary portable pump to be alarmed, the following guidelines need to be followed.

- **When work is performed at station:** If power is available, all alarms are to be routed through existing HRSD's SCADA system. Portable pump manufacture call box is not acceptable unless otherwise approved for site specific situations. If power is not available then, HRSD solar SCADA panel will be provided. A portable generator may be required depending on site specific situations.
- **When work is performed at a manhole:** If power is available, all alarms are to be routed through existing HRSD's SCADA system. Portable pump manufacture call box is not acceptable unless otherwise ap- proved for site specific situations. If power is not available then, HRSD solar Scada panel will be pro- vided. A portable generator may be required depending on site specific situations. Naming of the alarms from a manhole should indicate the location of the manhole (i.e., Pearl and Ligon)
- The name of the site is to be used followed by temporary lead, lag or second lag, depending on the number of pumps. (Example: Arctic Temporary Lead, Arctic Temporary Lag and Arctic Second Lag.)
- Both contractor and HRSD will be alerted in the event of a pump alarm. The contractor is responsible to be primary responder with the support of HRSD staff.
- All pump maintenance and fuel requirement are the contractor's responsibility.
- Pump maintenance records are to be provided monthly through the duration of the project by contractor, depending on length of project.
- Battery chargers are required with all pumps. In situations where power is not available a portable generator may be required.
- All discharge piping is to be pressure rated flanged or fused pipe. Isolations valves are required at each pump along with an additional external swing check valve. A means to bleed air off the discharge piping is required.
- Float balls, level transducers and pressure transducers are acceptable. In a Lift station or manhole application, level transducers are used. If float balls are used for control, a two float setup is required per pump. All floats are to be secured in manhole or wet well so as not to become tangled, hindering pump operation. In a temporary PRS setup, owner furnished sensor valve will be provided to allow contractor to connect pressure transducers for control. An isolation valve is required to be furnished by contractor at this location.
- If work is to be performed during cold weather, the contractor is responsible for providing freeze protection on pumps and controls, specifically transducers.
- Depending on location and duration of job, concrete protective barrier wall may be required.

- All manholes and wet wells where temporary pumps are being used must be secured to prevent trip hazards, fall risks and odor issues.

The following standard alarms are required. Site specific alarms will be evaluated on a as need basis.

I. Two Pump Lift station Or Manhole (Diesel Pumps)

Lead	Fail / Normal
Lag	On / off
High well used)	Alarm / Normal (HRSD furnished float ball if station alarms cannot be
Overflow	Alarm / Normal (Determined necessary according to length of Job. HRSD furnished float ball if station alarms cannot be used.)

II. Three Pump Lift station Or Manhole (Diesel Pumps)

Lead	Fail / Normal
Lag	
On / off	
Second La	
On / Off	
High well used)	Alarm / Normal (HRSD furnished float ball if station alarms cannot be
Overflow	Alarm / Normal (Determined necessary according to length of Job. HRSD furnished float ball if station alarms cannot be used.)

III. Two Pump Lift Station or Manhole (Diesel Pumps) New Prime Guard Controller

Lead	Fail / Normal
Lag	On / off and Fail / Normal
High well used)	Alarm / Normal (HRSD furnished float ball if station alarms cannot be
Overflow	Alarm / Normal (Determined necessary according to length of Job.

HRSD furnished float ball if station alarms cannot be used.)

IV. Two Pump Lift Station or Manhole (One electric one diesel pump) New Prime Guard Controller

Dominion Power O n / OFF

Lead Fail / Normal (Electric)

Lag On / off and Fail / Normal

High well Alarm / Normal (HRSD furnished float ball if station alarms cannot be used)

Overflow Alarm / Normal (Determined necessary according to length of Job. HRSD furnished float ball if station alarms cannot be used.)

(For HRSD monitoring purposes only, provide well level.)

V. Three Pump Lift Station or Manhole (One electric two diesel pump) New Prime Guard Controller

Dominion Power O n / OFF

Lead Fail / Normal (Electric)

Lag On / off and Fail /

Normal Second Lag On / off and

Fail / Normal

High well Alarm / Normal (HRSD furnished float ball if station alarms cannot be used)

Overflow Alarm / Normal (Determined necessary according to length of Job. HRSD furnished float ball if station alarms cannot be used.)

(For HRSD monitoring purposes only, provide well level.)

VI. Two Pump PRS (Diesel Pumps) New Prime Guard Controller

Lead Fail / Normal

Lag On / off and Fail / Normal

(For HRSD monitoring purposes only, provide Suction and Discharge pressures.)

VII. Three Pump PRS (Diesel Pumps) New Prime Guard Controller

Lead Fail / Normal

Lag On / off and Fail /

Normal Second Lag On / off and

Fail / Normal

(For HRSD monitoring purposes only, provide Suction and Discharge pressures.)

VIII. Two Pump PRS (One electric one diesel pump) New Prime Guard Controller

Dominion Power O n / OFF

Lead Fail / Normal (Electric)

Lag On / off and Fail / Normal

(For HRSD monitoring purposes only, provide Suction and Discharge pressures.)

IX. Three Pump PRS (One electric two diesel pump) New Prime Guard Controller

Dominion Power O n / OFF

Lead Fail / Normal (Electric)

Lag On / off and Fail / Normal

Second Lag On / off and Fail / Normal

(For HRSD monitoring purposes only, provide Suction and Discharge pressures.)

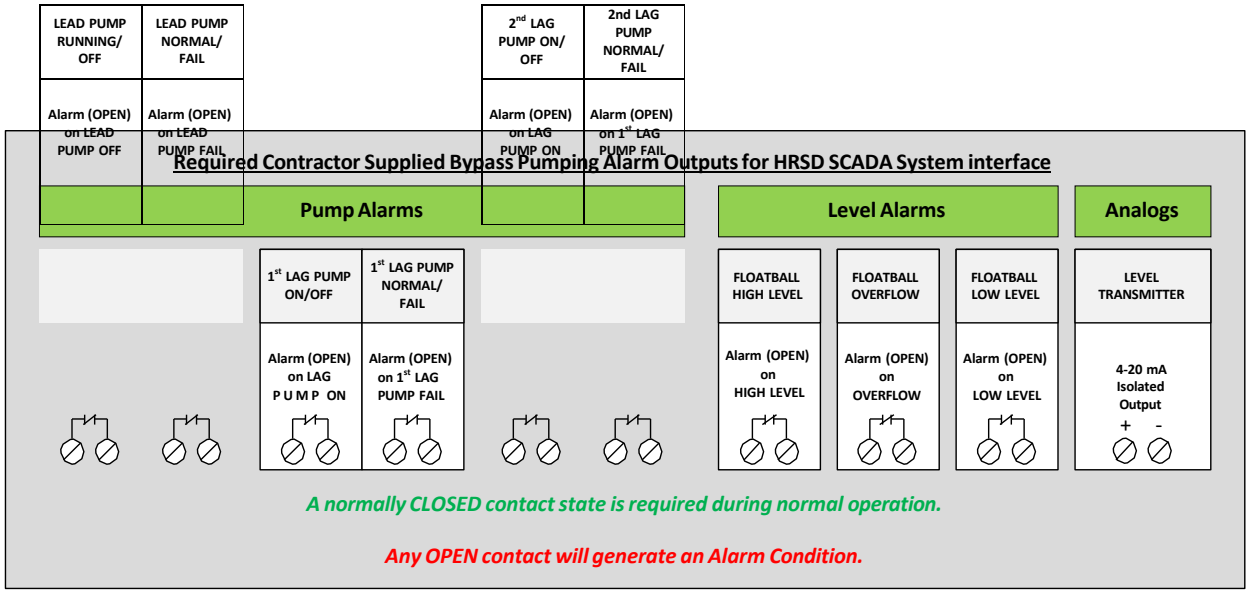

Click here to return to SCADA Site Drawings

Exhibit H

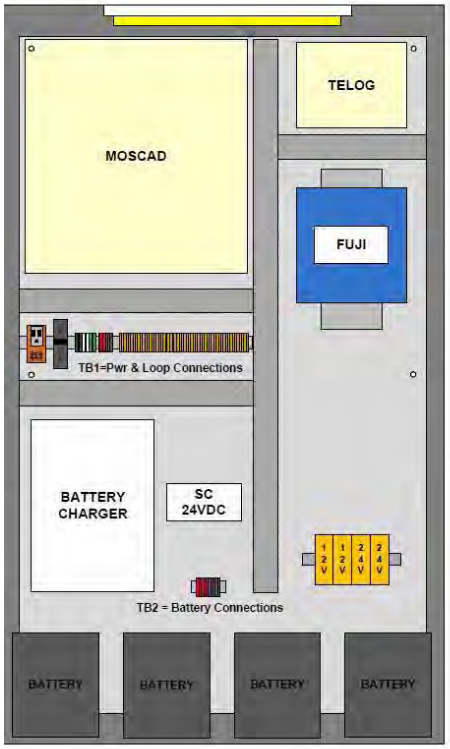

SCADA/MMP SITE MATERIALS

CABINET =	Hoffman A60H3612ALLP/SPL w/Back Plane
	(Special Order HRSD# 583JG for 60x36x18)
DATA LOGGER =	Telog 3307A or 3314 w/Modem & Antenna
FLOW METER =	Fuji #FLVS1213 (24VDC)
BATTERY CHARGER =	Newmar #PT-24-20U (24VDC)
BATTERIES (X4) =	100Ah Gel Cell Batteries (12VDC)
CABINET LIGHT =	Various (120VAC)
PANDUIT =	Various
DIN RAIL =	Various
TERMINAL STRIPS =	Weidmuller # WDU2.5 1020000000 (Beige)
	Weidmuller # WDU2.5 1020090000 (Green)
	Weidmuller # (Black) ?
	Weidmuller # (Red) ?
OUTLET =	Weidmuller #RS-Simplex 9915480000 (120VAC)
CIRCUIT BREAKER =	Square D #QOU120 (20A DIN Rail Mount)
POST =	Various 4 X 6 X 8
ANTENNA MAST 20' =	Various
MISC WIRING =	Various
RTU =	MOSCAD Ace (Optional)
POWER SUPPLY =	IDEC 24 VDC # PS5R-SD24 (Optional)
POWER SUPPLY =	IDEC 14 VDC # PS5R-SD12 (Optional)

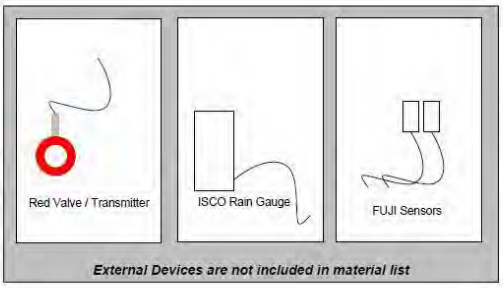

HRSD

DESCRIPTION

SCADA/MMP SITE

DRAWING DESCRIPTION						PAGE
REV.	A	DATE:	11-21-2011	BY:	L. Inman	1
REV.	B	DATE:	11-29-2011	BY:	L. Inman	
REV.	C	DATE:	10-21-2019	BY:	L. Inman	

Click here to return to SWIFT

Exhibit I

RECOMMENDED ADDITIONS/CHANGES TO SPECIFICATIONS FOR FUTURE SWIFT DESIGN

PREPARED BY HRSD EEM STAFF

SECTION 1 ELECTRICAL

1.1 ELECTRICAL CONDUIT / ROUGH IN / METHODS

1.2 LIGHTING

1.3 DESIGN / LAYOUT

SECTION 2 INSTRUMENTATION ELECTRICAL

2.1 MOLEX CONNECTORS

2.2 WIRING TERMINATIONS

2.3 VFD CABINET CONSTRUCTION

2.4 INSTRUMENT GENERAL

SECTION 3 INSTRUMENTAION PIPING METHODS

3.1 SAMPLE PIPING

3.2 DRAIN PIPING

3.3 GENERAL

SECTION 4 DCS

4.1 INTERPOSING RELAY CABINET

4.2 OPCON

4.3 CONTROL NETWORK

ELECTRICAL

1.1 ELECTRICAL CONDUIT/ ROUGH IN METHODS

A. ALL EXTERIOR POWER AND CONTROL CONDUCTORS MUST BE FULLY ENCASED IN CONDUIT. CABLE TRAY MAY NOT BE USED ON AREAS DEFINED AS "WET LOCATION" BY THE NEC. CONDUIT STUB UPS SHALL EXTEND COMPLETELY UP TO ALL ENCLOSURES, DISCONNECTS OR WIREWAYS. NO EXTERIOR CABLE WILL BE ALLOWED TO BE RAN "FREE AIR". EXPANSION JOINTS TO BE USED WHERE REQUIRED.

B. ALL OUTLET BOX ROUGH-INS OF GWB CONSTRUCTION SHALL USE A BRACKET TO MOUNT TO AT LEAST TWO WALL STUDS. SCREW EAR BOXES ARE NOT ACCEPTABLE. USE OF THESE BRACKETS WILL ALSO INSURE THAT BOXES MOUNTED NEXT TO EACH OTHER WILL BE LEVEL.

C. ALL CONDUIT/RACEWAYS SHALL BE RAN CONCEALED IN AREAS OF GWB CONSTRUCTION.

D. ALLOW ½" TRADE SIZE EMT TO BE RAN ON RECEPTACLE AND LIGHTING CIRCUITS CONCEALED IN GWB CONSTRUCTION, OR ABOVE CEILING TILES.

1.2 LIGHTING

A. CONTROL ROOM LIGHTING SHALL BE OF A LOW GLARE DESIGN IN RELATION TO THE VIDEO DISPLAYS, WITH DIMMABLE SWITCHING AND OCCUPANCY SENSOR OVERIDE.

B. ELECTRICAL AND MECHANICAL SPACES SHALL HAVE A MINUMUM LIGHTING LEVEL OF 30 VERTICAL AND HORIZONTAL FOOT CANDLES PER IES STANDARDS. 75% OF EACH ELECTRICAL AND MECHANICAL ROOM SPACE LIGHTING FIXTURES SHALL BE ON DUAL TECHNOLOGY OCCUPANCY SENSORS WITH ADEQUATE COVERAGE OF ENTIRE SPACE. THE 25% REMAINDER OF LIGHTING SHALL BE CONNECTED TO TRADITIONAL MANUAL SWITCHING.

C. NO STAIRWAY LIGHTING SHALL BE MOUNTED IN A LOCATION THAT IS NOT ACCESSIBLE VIA A STANDARD 8′ A-FRAME LADDER SET ON STAIR LANDINGS.

D. NO LIGHTING ABOVE FANS DUE TO STROBING EFFECT.

1.3 DESIGN / LAYOUT

A. LAB COUNTER TOP RECPTACLES SHALL BE ONE DUPLEX EVERY FIVE FEET OF COUNTER WITH A MINIMUM OF TWO DUPLEX RECEPTACLES FOR ANY SIZE COUNTER SPACE.

B. CONTROL ROOM DESIGN SHALL INCLUDE RACEWAYS FOR VIDEO AND DATA CABLING, AND A DUPLEX RECPTACLE BEHIND EACH WALL MOUNTED VIDEO MONITOR OR COMPUTER DISPLAY.

INSTRUMENTATION ELECTRICAL

2.1 MOLEX CONNECTORS

A. FIELD POWERED TRANSMITTERS SHALL USE MOLEX CONNECTOR CAT. #WH1R3006A20M005G8 MOUNTED ON THE BOTTOM OF THE TRANSMITTER. THE MATING PLUG/CABLE IS CAT. #WH103000A45M0208 (2 METER CABLE LENGTH) FOR 120 VOLT POWER CONNECTIONS. THIS CONNECTOR WILL SERVE AS A MEANS OF DISCONNECT FOR INDIVIDUAL UNITS.

B. TRANSMITTERS AND SENSORS WILL USE A MOLEX CONNECTOR CAT. # WH8R4006A18M0058 MOUNTED ON THE BOTTOM OF TRANSMITTER/SENSOR WHEN POSSIBLE. THE MATING PLUG/CABLE IS CAT. # WH80400D01M0208 THIS IS A TWO PAIR CONFIGURATION THAT WILL ALLOW FOR TWO ANALOG 4-20MA CURRENT LOOPS OR TWO DIGITAL SIGNALS. IF THE EQUIPMENT REQUIRES MORE THAN TWO PAIR SHIELDED CONDUCTORS HARD WIRING IS ACCEPTABLE.

2.2 WIRING TERMINATIONS

A. ALL CONTROL WIRING TERMINATIONS WILL USE A CRIMP ON TYPE CONNECTOR OF EITHER A FORK TYPE OR A PIN TYPE APPROPRIATE FOR TERMINAL BLOCK STYLE.

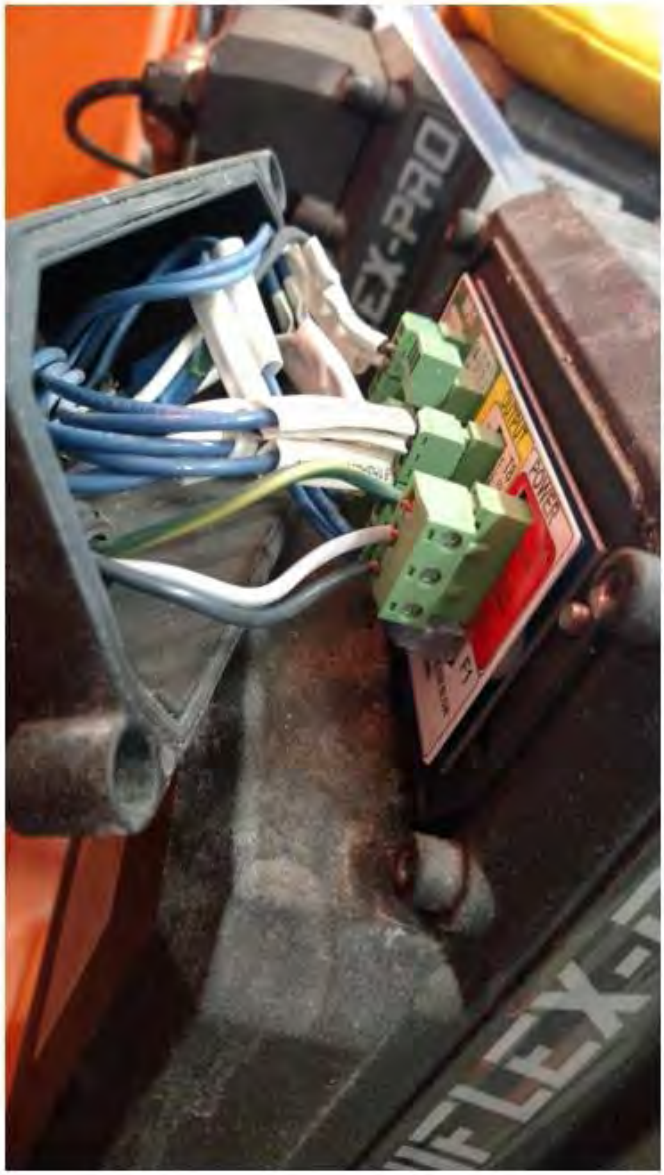

B. UPON OWNER REVIEW AND APPROVAL THE MINUMUM CONTROL WIRE SIZE MAY BE REDUCED TO ACCOMODATE EQUIPMENT WITH SMALL/CONGESTED TERMINATION SPACES. EXAMPLE: METERING PUMPS WITH 12-16 CONTROL CONDUCTORS.

2.3 VFD CABINET CONSTRUCTION

A. THE MOUNTING LOCATION OF COOLING FAN THERMOSTAT INSIDE THE CABINET SHALL BE PARALLEL OR HIGHER THAN THE TOP OF THE ACTUAL VFD UNIT WHERE THE HEAT ORIGINATES.

B. COOLING FAN POWER SHALL BE RAN THROUGH THE RUN RELAY SO THAT THE FAN DOES NOT RUN IF VFD IS NOT IN RUN MODE.

C. COOLING FAN EXHAUST OUTLETS INSIDE CONDITIONED SPACES SHALL NOT HAVE FILTERS, AND SHALL EXHAUST OUT THE SIDE OR TOP OF THE CABINET CONSISTANT WITH U.L. STANDARDS.

D. INCLUDE A BULKHEAD MOUNT WITH DUST COVER USB CONNECTOR ON THE CONTROL SURFACE OF THE VFD CABINET WHICH IS CONNECTED TO THE DATA PORT ON THE VFD UNIT. THIS IS TO ALLOW A LAPTOP CONNECTION TO THE VFD TO MODIFY PARAMETERS, ETC. WITHOUT NEEDING TO OPEN THE CABINET.

2.4 INSTRUMENT GENERAL

A. WHERE POSSIBLE MOUNT ALL TRANSMITTERS AT APPROX 5' AFF OR WALKWAY FOR EASE OF ACCESS AND VISUAL INSPECTION.

B. PROVIDE LOCAL AUDIBLE AND VISUAL ALARMS IN CHEMICAL ROOMS FOR CHLORINE AND SULPHER DIOXIDE GAS DETECTORS. CURRENTLY INSTALLED GAS DETECTORS ONLY HAVE A BLINKING DISPLAY WHEN ALARM CONDITION EXISTS.

C. PROVIDE A UPS TO POWER SHIMADZU TOC ANALYZER SIZED TO CARRY IT THROUGH GENERATOR STARTUP/SWITCHING.

INSTRUMENTATION PIPING METHODS

3.1 SAMPLE PIPING

A. FIRST SAMPLE INSTRUMENT IN A LINE UP SHALL NOT BE AFFECTED BY AIR BUBBLES. FOR EXAMPLE A PH PROBE FIRST IN LINE WILL ALLOW AIR TO ESCAPE BEFORE REACHING TURBIDITY METERS.

B. ALTERNATIVE METHODS SHOULD BE INVESTIGATED TO CONTROL FLOW TO INSTRUMENT LINE UPS ON INFLUENT AND FLOC/SED INSTRUMENTATION. ROTAMETERS AND REGULATORS ARE CLOGGING CAUSING LOW OR NO FLOW CONDITIONS.

C. PROVIDE A MEANS TO FLUSH BIOFILTER HEADLOSS TRANSDUCER SAMPLE LINES.

D. INCORPORATE A FULL DIAMETER FLUSH VALVE AT LOW POINT OF INSTRUMENT LINEUP SAMPLE LINES.

3.2 DRAIN PIPING

A. FLOOR DRAINS AT EACH INTERIOR INSTRUMENT LINEUP.

B. INSTRUMENT DRAIN LINES ON FRONT OF INSTRUMENT LINEUP WITH AIR GAP TO ALLOW VISUAL FLOW CONFIRMATION.

3.3 GENERAL

C. METERING PUMPS ON TURBIDITY INSTRUMENTS.

D. SELF CLEANING DEVICES ON INFLUENT AND FLOC/SED TURBIDITY INSTRUMENTS.

E. HEAT TRACING AND INSULATION ON ALL EXTERIOR SAMPLE AND DRAIN LINES INCLUDING PRESSURE TRANSMITTERS AND SWITCHES.

DCS

4.1 INTERPOSING RELAY CABINET

A. PROVIDE A POWER MONITORING OUTPUT POINT TO DCS THAT WILL INDICATE POWER LOSS TO ANY INTERPOSING RELAY CABINET CONTROL CIRCUITS.

4.2 OPCON

A. AT LEAST ONE ADDITIONAL OPERATORS CONSOLE FOR DCS THAT IS NOT LOCATED IN THE MAIN CONTROL ROOM.

4.3 NETWORK

A. SPEC FIBER OPTIC CAPABLE CISCO NETWORK SWITCHES IN ALL VENDOR PROVIDED EQUIPMENT THAT WILL CONNECTED THIRD PARTY TO THE DCS.

B. ENCOURAGE THE USE OF FIBER OPTIC CABLE IN LEIU OF TYPE TC CAT-6 CABLE.

C. IF CAT-6 TYPE TC IS USED IT MUST BE TERMINATED TO A PATCH PANEL AND NOT DIRECTLY CONNECTED TO NETWORK EQUIPMENT. THIS IS TO PREVENT DAMAGE TO NETWORK JACKS FROM THE RELATIVELY LARGE HEAVY CABLE.

D. INVESTIGATE THE USE OF VENDOR NETWORKS TO ALLOW THIRD PARTY COMMUNICATION TO THE DCS. SUCH AS HACH INSTRUMENTS, YASKAWA VFD AND CHEMICAL METERING PUMPS. THIS WOULD ALLOW MORE DETAILED INFORMATION TO BE AVAILABLE TO THE DCS. IT WOULD ALSO ALLOW ALL CONTROL WIRING TO REMOTE AREAS SUCH AS RECHARGE WELL HOUSES TO BE FIBER OPTIC. THIS

NEEDS TO BE FURTHER DISCUSSED WITHIN HRSD TO DETERMINE IF WE WILL GET ALL NEEDED ALARMS WE DESIRE FROM THE VFD CABINET. IE: POWER LOSS INDICATION

E. PROVIDE A HRSD CORPORATE NETWORK HARDWIRE CONNECTION OR WI-FI AT REMOTE LOCATIONS SUCH AS PUMP HOUSES TO ALLOW TROUBLSHOOTING VIA EDS, ETC.

Click here to return to duct bank

Click here to return to duct bank

Exhibit J

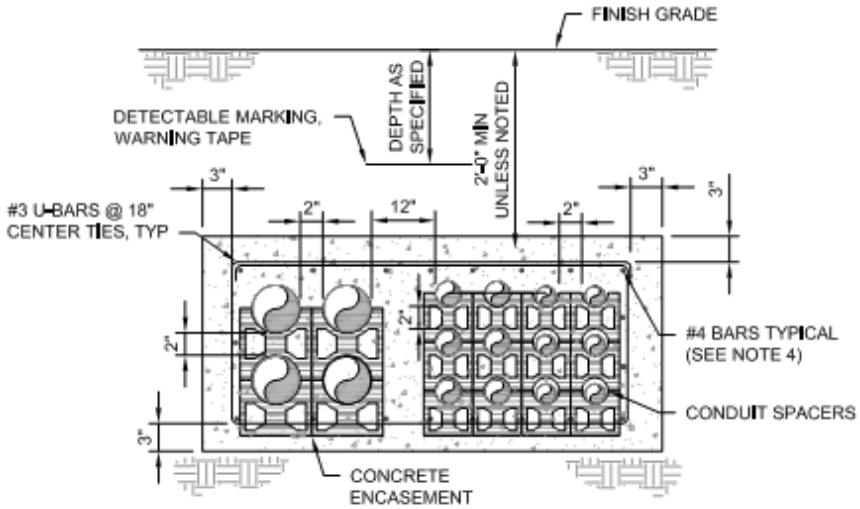

NOTES FOR DUCT BANKS

1. CONDUIT SPACING SHALL BE AS REQUIRED BY NEC. MINIMUM CONCRETE THICKNESS BETWEEN CONDUITS SHALL BE 2" MIN. CONCRETE THICKNESS BETWEEN POWER AND INSTRUMENTATION CONDUITS SHALL BE 7 1/2".
2. DUCT BANKS SHALL BE REINFORCED AT ALL LOCATIONS, BOTH HORIZONTAL AND VERTICAL INSTALLATIONS.
3. SEE SPECIFICATIONS FOR UNDERGROUND WARNING TAPE.
4. QUANTITY OF BARS EQUALS THE QUANTITY OF CONDUITS PLUS ONE, PER FACE MINIMUM.
5. CONCRETE SHALL BE RED-DYED.

TYPICAL REINFORCED CONCRETE ENCASED DUCTBANK CONSTRUCTION

DETAIL 1 -

L

Click here to return to Dominion Energy PS

Click here to return to Dominion Energy TP

Exhibit K

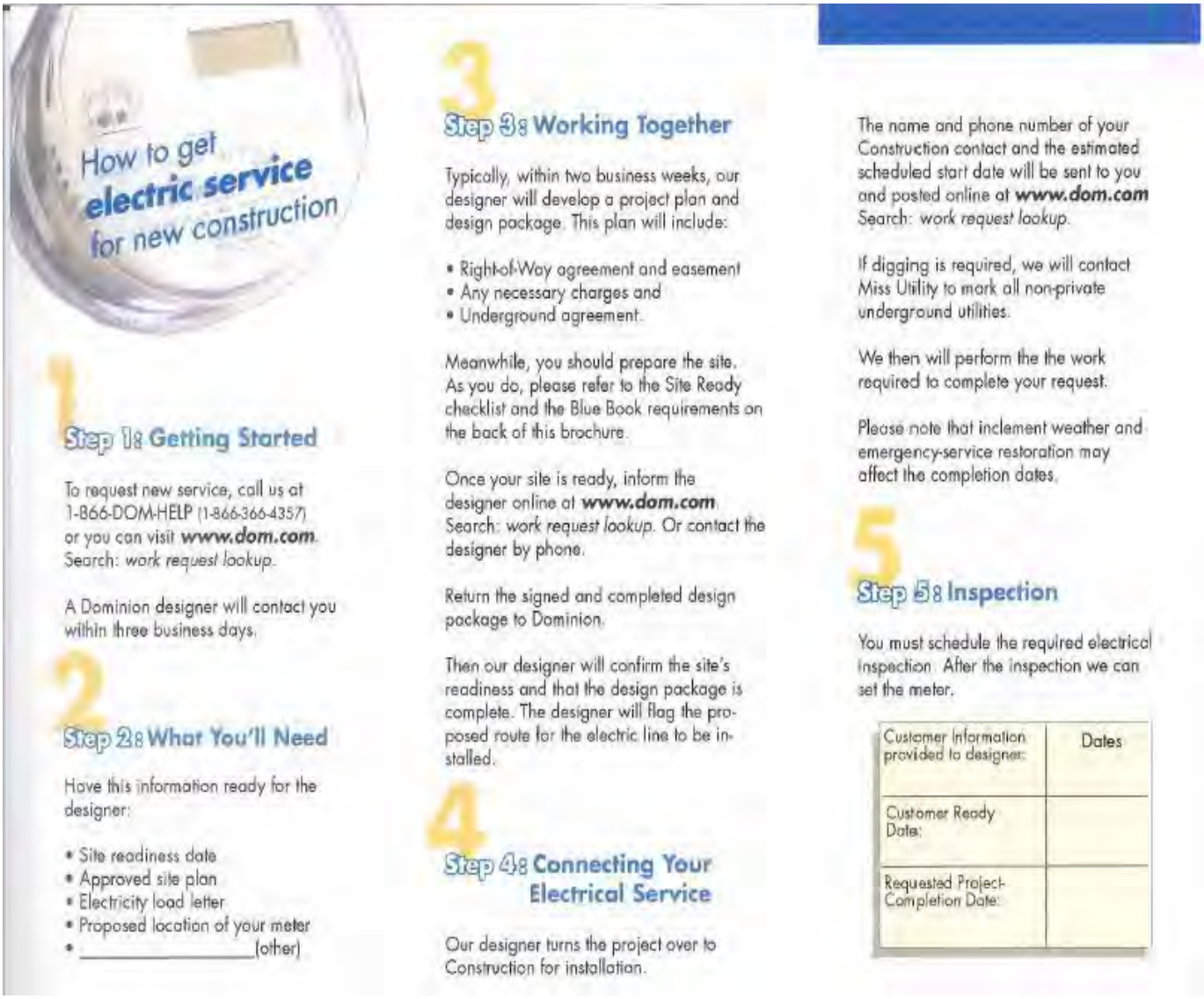

How to get electric service for new construction

Step 1: Getting Started

To request new service, call us at 1-866-DOM-HELP (1-866-366-4357) or you can visit **www.dom.com**. Search: *work request lookup*.

A Dominion designer will contact you within three business days.

Step 2: What You'll Need

Have this information ready for the designer:

- Site readiness date
- Approved site plan
- Electricity load letter
- Proposed location of your meter
- _____(other)

Step 3: Working Together

Typically, within two business weeks, our designer will develop a project plan and design package. This plan will include:

- Right-of-Way agreement and easement
- Any necessary charges and
- Underground agreement.

Meanwhile, you should prepare the site. As you do, please refer to the Site Ready checklist and the Blue Book requirements on the back of this brochure.

Once your site is ready, inform the designer online at **www.dom.com**. Search: *work request lookup*. Or contact the designer by phone.

Return the signed and completed design package to Dominion.

Then our designer will confirm the site's readiness and that the design package is complete. The designer will flag the proposed route for the electric line to be installed.

Step 4: Connecting Your Electrical Service

Our designer turns the project over to Construction for installation.

The name and phone number of your Construction contact and the estimated scheduled start date will be sent to you and posted online at **www.dom.com** Search: *work request lookup*.

If digging is required, we will contact Miss Utility to mark all non-private underground utilities.

We then will perform the the work required to complete your request.

Please note that inclement weather and emergency-service restoration may affect the completion dates.

Step 5: Inspection

You must schedule the required electrical inspection. After the inspection we can set the meter.

Customer information provided to designer:	Dates
Customer Ready Date:	
Requested Project-Completion Date:	

Site Ready Checklist

Before work can begin to install service, please complete the following:

- ___ Mark property lines
- ___ Mark all private underground facilities
- ___ Ensure lot is within 6" of final grade
- ___ Install and mark conduit per Dominion requirements
- ___ Sign and return underground agreement to Dominion
- ___ Make all necessary payments to Dominion
- ___ Sign and return any required easements to Dominion
- ___ Clear obstructions from cable route
- ___ Make sure all erosion control is adequate.
- ___ When the site is ready, notify your designer at **www.dom.com**. Search: *work request lookup*.

Blue Book Requirements

Before electrical service can begin, you also must take care of the following.

- ___ Clear space around meter (Section VII, Definitions)
- ___ Overhead point of attachment (Section 290)
- ___ Overhead entrance cable (Section 270 & 280)
- ___ Overhead service entrance (Section 270 & 280)
- ___ Underground service entrance (Section 450)
- ___ Meter location (Section 230)
- ___ Meter connection (Section 240)
- ___ Footer requirements for underground (Section 450.6)

The Blue Book is available at any Dominion office or at **www.dom.com**. Search: Blue Book.

Designer:

Contact information:

Office: Fax:

Cell: E-mail:

www.dom.com.
Search: *work request lookup*

© 2012 Dominion. 2012-462

Dominion

How to get **electric service** for new construction

A quick reference guide

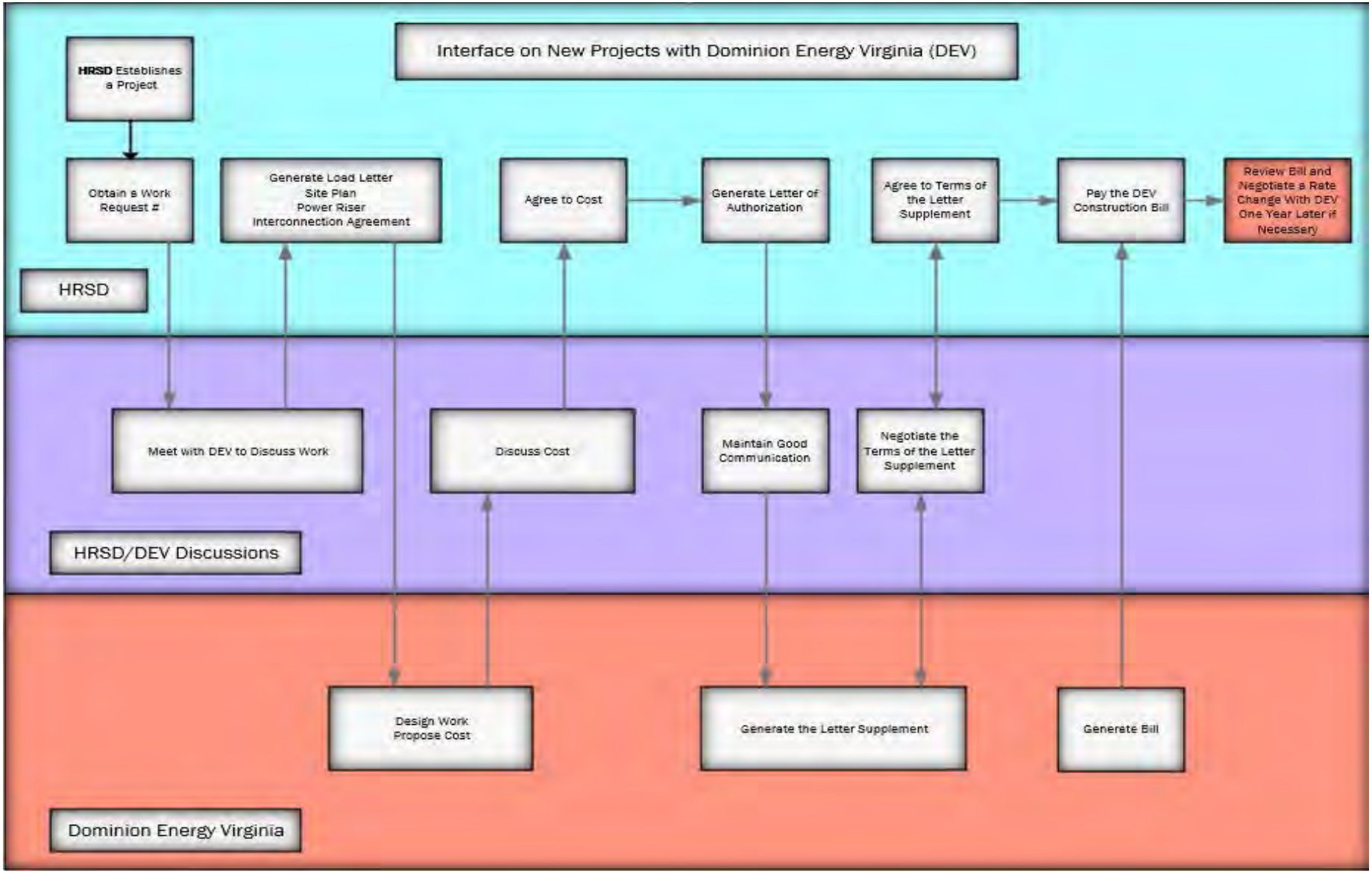
Interface on New Projects with Dominion Energy Virginia (DEV)
HRSD Establishes a Project
Obtain a Work Request #
Generate Load Letter
Site Plan
Power Riser
Interconnection Agreement
Agree to Cost
Generate Letter of Authorization
Agree to Terms of the Letter Supplement
Pay the DEV Construction Bill
Review Bill and Negotiate a Rate Change With DEV One Year Later if Necessary
HRSD
Meet with DEV to Discuss Work
Discuss Cost
Maintain Good Communication
Negotiate the Terms of the Letter Supplement
HRSD/DEV Discussions
Design Work
Propose Cost
Generate the Letter Supplement
Generate Bill
Dominion Energy Virginia

Click here to return to SCADA

Exhibit L

SCADA 2.0 PROCESS FLOWCHART

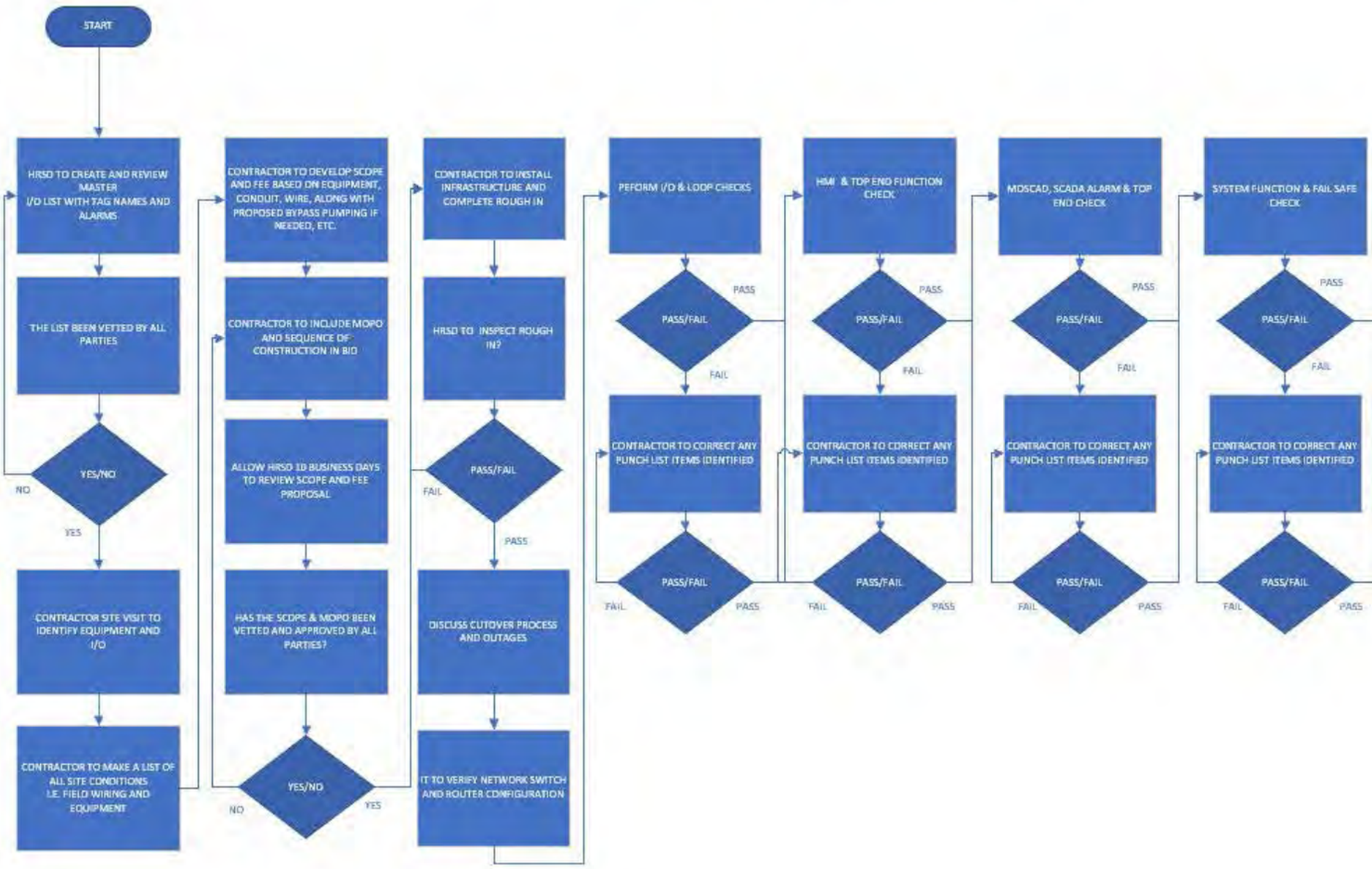

Click here to return to Remote Switch Operator (RSO) Open/Close Breaker Station (PS)

Exhibit M

Click here to return to Remote Switch Operator (RSO) Open/Close Breaker Station (TP)

Exhibit N

Human Machine Interface (HMI) Panel for Open/Close Breaker Operation and Rack In/Out Capability

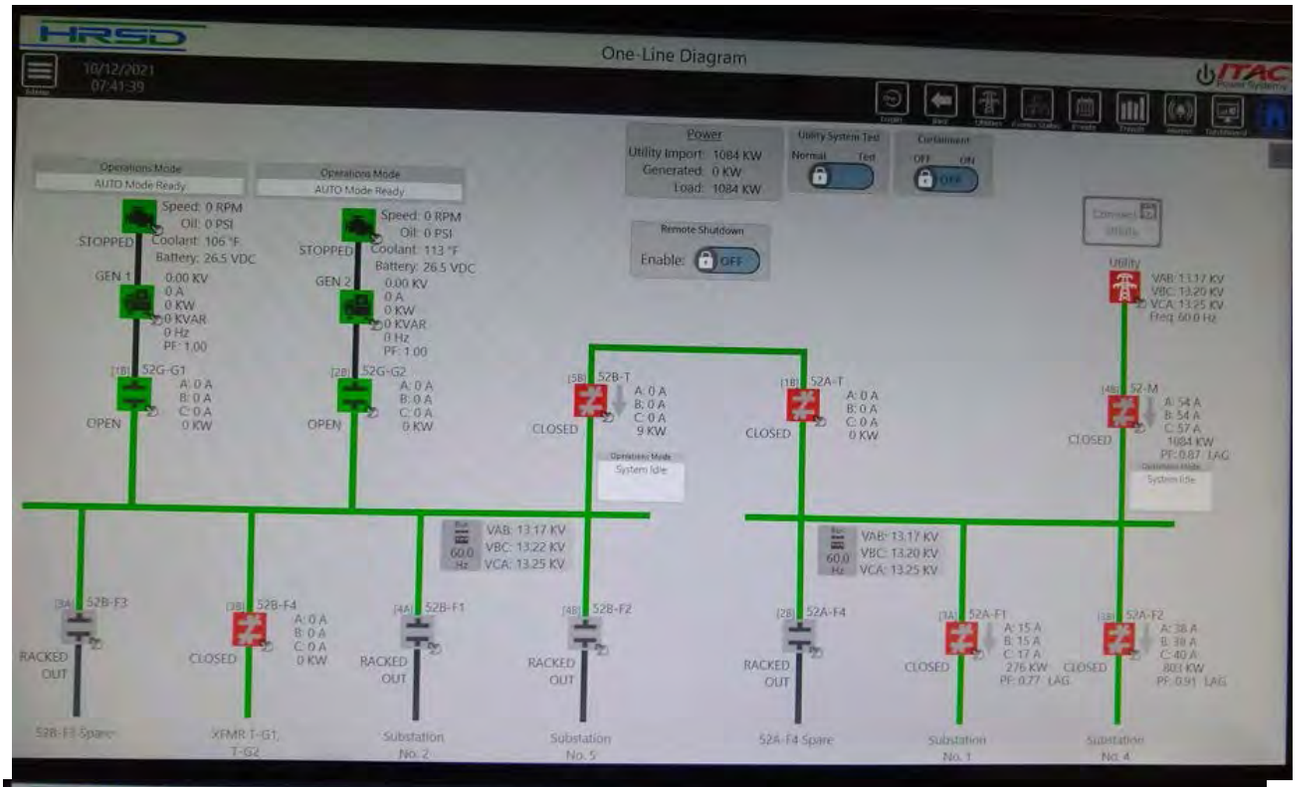

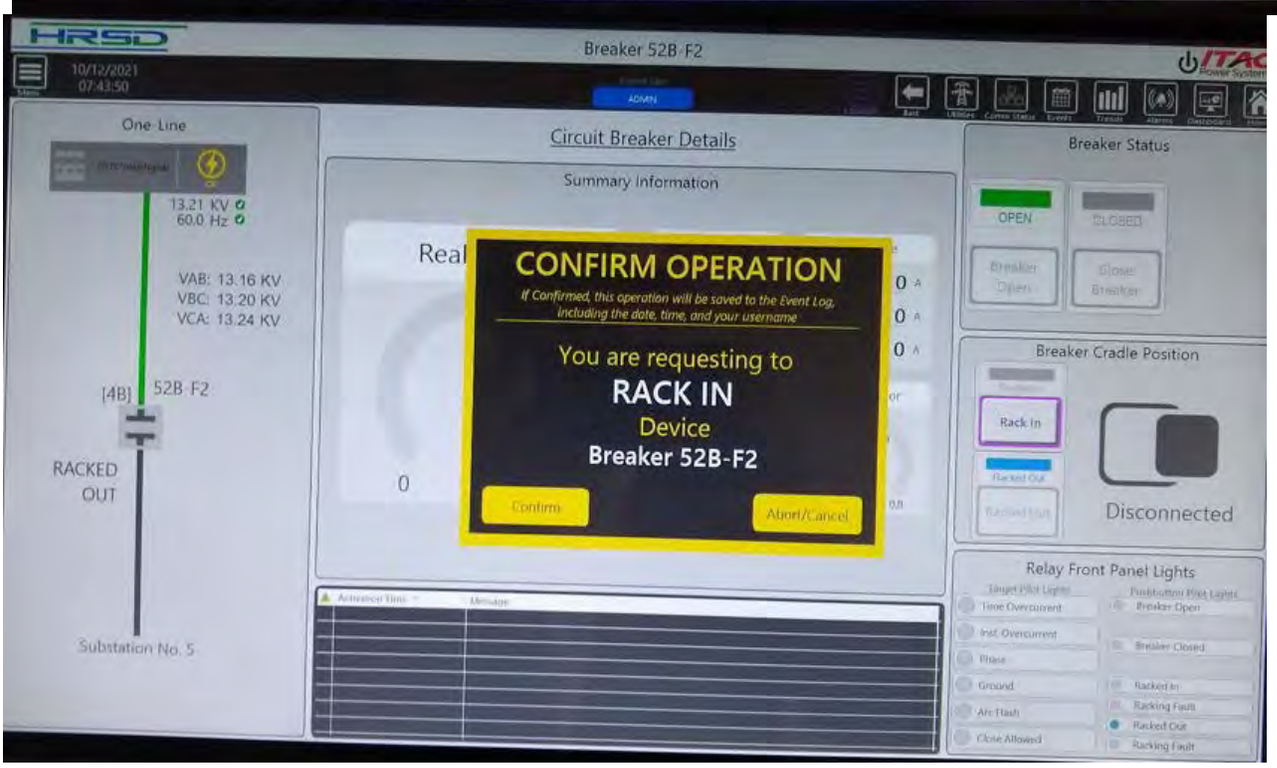

Click here to return to Flow Meters PS

Click here to return to Flow Meters TP

X. Exhibit O

FLEXIM

Technical specification
FLUXUS® F501SC

Ultrasonic flow measurement for the semiconductor industry

Permanently installed, completely metal-free ultrasonic clamp-on system for the flow measurement of liquids

Features

- Non-intrusive flow measurement with high measuring accuracy for stationary use
- The transducer mounting fixture and the transducers are completely metal-free
- For plastic pipes and flexible tubes with diameters of 3/8 ", 1/2 ", 3/4 ", 1 ", 1 1/4 ", others on request
- High measuring accuracy, even at low flow velocities
- Installation and commissioning can be carried out during operation
- No risk for potential contamination or leaks as the transducers are clamped-on to the outside of the pipe wall
- User-friendly menu navigation - the firmware is specifically adapted to the needs of the semiconductor industry

FLUXUS F501

Applications

Flow measurement in the semicondutor industries for:

- Highly corrosive substances, e.g., acids or caustics
- Cleaning agents
- Solvents
- Ultrapure fluids

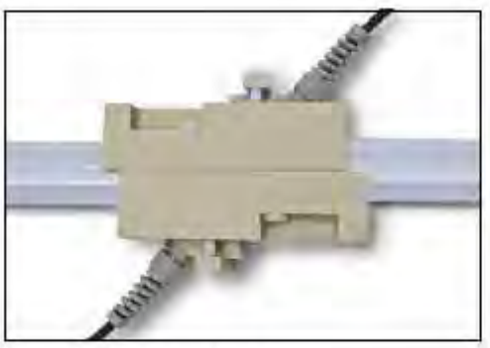

Transducers CDQ2LK1 in block fastener

Flow transmitter

Technical data

FLUXUS	F501SC
design	field device with 1 measuring channel
application	semiconductor applications
measurement	
measurement principle	transit time difference correlation principle
flow velocity	0.03 to 82 ft/s
repeatability	0.25 % of reading ±0.03 ft/s
fluid	water and acoustically similar liquids with < 6 % gaseous or solid content by volume
accuracy[1] - volumetric flow rate	 ±2 % of reading ±0.03 ft/s
flow transmitter	
power supply	100 to 230 V/50 to 60 Hz or 20 to 32 V DC or 11 to 16 V DC
power consumption	< 10 W
number of flow measuring channels	1
damping	0 to 100 s, adjustable
measuring cycle (1 channel)	10 Hz
response time	1 s
housing material	aluminum, powder coated
degree of protection	NEMA 4
dimensions	see dimensional drawing
weight	3.3 lb
fixation	wall mounting
ambient temperature	14 to +140 °F
display	2 x 16 characters, dot matrix, backlight
menu language	English, German, French, Dutch, Spanish
measuring functions	
physical quantities	volumetric flow rate, mass flow rate, flow velocity
totalizer	volume, mass
data logger (optional)	
loggable values	all physical quantities and totalized values
capacity	> 100 000 measured values
communication	
interface	optional: RS485 (sender) or Modbus RTU or BACnet MS/TP
outputs (optional)	
	The outputs are galvanically isolated from the transmitter.
	current output
number	1
range	0/4 to 20 mA
accuracy	0.1 % of reading ±15 µA
active output	R_{ext} < 500 Ω
	binary output
number	2
optorelay	28 V/100 mA
binary output as alarm output - functions	 limit, change of flow direction or error
binary output as pulse output - pulse value - pulse width	mainly for totalizing 0.01 to 1000 units 80 to 1000 ms

[1] for reference conditions and v > 0.82 ft/s

Dimensions

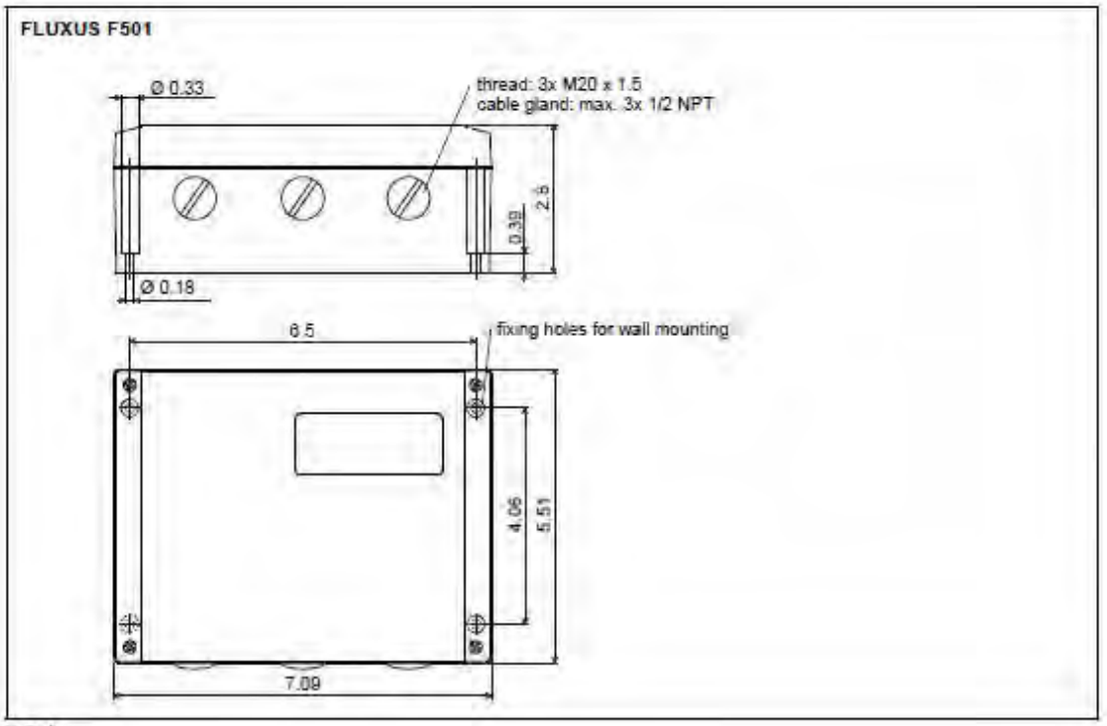

in inch

Terminal assignment

FLUXUS F501

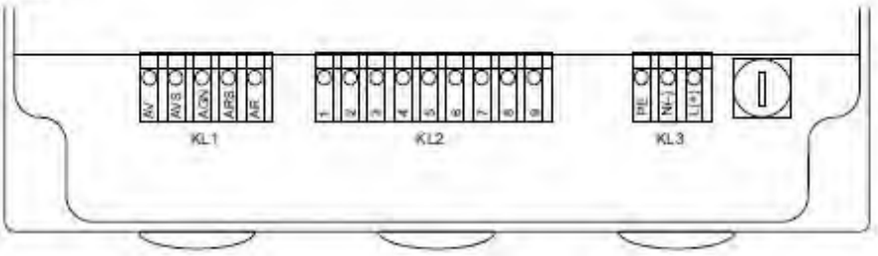

power supply

terminal strip KL3

terminal	connection (AC)	connection (DC)
PE	earth	earth
N(-)	neutral	-
L(+)	phase	+

transducers

terminal strip KL1

transducer cable	
measuring channel A	
terminal	**connection**
AV	transducer, signal
AVS	transducer, internal shield
ARS	transducer, internal shield
AR	transducer, signal
cable gland	external shield

outputs

terminal strip KL2

terminal	connection
1(-), 2(+)	binary output B1
3(-), 4(+)	binary output B2
5(-), 6(+)	current output I1
7(-), 8(+), 9 (shield)	RS485 (optional)

Transducers

Technical data

technical type		CDQ2LK1
transducer frequency	MHz	4
inner pipe diameter d		
min. extended	in	0.31
min. recommended	in	0.47
max. recommended	in	2
pipe wall thickness		
min.	in	0.02
material		PEEK
degree of protection		NEMA 6
transducer cable		
type		2549
length	ft	32
dimensions		
length l	in	1.57
width b	in	0.71
height h	in	1.04
dimensional drawing		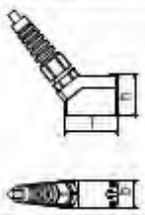
ambient temperature		
min.	°F	-20
max.	°F	+212

Transducer mounting fixture

block fastener

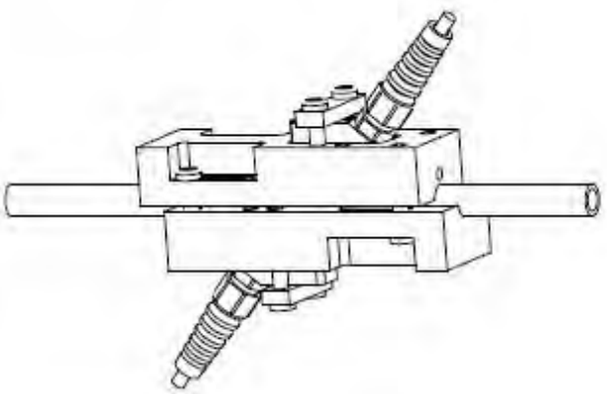

material: PP

outer pipe diameter Da:
3/8 ", 1/2 ", 3/4 ", 1 ", 1 1/4 ", 1 1/3 ", 1 1/2 " (others on request)

dimensions l x b x h:

- l: 4.72 in
- b:
  3/8 ", 3/4 ", 1 ": 1.81 in
  1/2 ": 1.61 in
  1 1/4 ": 2.09 in
  1 1/3 ", 1 1/2 ": 2.4 in
- h: outer pipe diameter + 2x transducer height + 0.87 in

Connection systems

direct connection

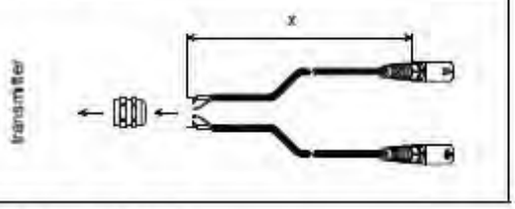

x = transducer cable length

Transducer cable

Technical data

		transducer cable
type		2549
ambient temperature	°F	-148...+392
cable jacket		
material		PTFE
outer diameter	in	0.21
thickness	in	0.02
color		black
shield		x

FLEXIM

Technical specification

FLUXUS F721

Permanently installed ultrasonic flowmeter for liquids

Transmitter for permanent outdoor wall or pipe mounting

Features

- Exact and highly reliable bidirectional clamp-on volume and mass flow measurement
- Installation and startup do not require any pipe work nor any process interruptions
- High measurement accuracy even at very low as well as very high flow rates and independent of the flow direction (bidirectional)
- Possibility to measure thermal energy quantities using clamp-on or inline temperature probes
- Automatic loading of calibration data and transducer recognition
- Bidirectional communication and support of common bus technologies (Profibus PA, Foundation Fieldbus, HART, Modbus, BACnet)
- Advanced self-diagnosis and possibilities for event based triggering of data recording for the supervision and control of critical processes
- Transmitter and transducers for use in hazardous areas are available
- Transmitter and transducers are separately calibrated (traceable to national standards)
- Transducers available for a wide range of inner pipe diameters and fluid temperatures -274 to +1112 °F
- The measurement is zero point stable, drift free and independent of pipe material, process pressure, process temperature and process fluid

Applications

- Chemical industry
- Petrochemical industry
- Oil and gas industry
- Pharmaceutical industry
- Semiconductor industry
- Manufacturing industries
- Building technology/energy management
- Water and wastewater industry
- Mining industries

FLUXUS F721**-****A

FLUXUS F721**-****S

PermaRail

TSFLUXUS_F721V2-2US_Lus, 2018-10-30

Function . . . 3
Measurement principle . . . 3
Calculation of volumetric flow rate . . . 3
Number of sound paths . . . 4

Transmitter . . . 5
Technical data . . . 5
Dimensions . . . 8
2" pipe mounting kit . . . 9
Terminal assignment . . . 10

Transducers . . . 11
Transducer selection . . . 11
Transducer order code . . . 12
Technical data . . . 13

Transducer mounting fixture . . . 19

Coupling materials for transducers . . . 22

Connection systems . . . 23

Junction box . . . 25
Technical data . . . 25
Dimensions . . . 26
2" pipe mounting kit . . . 26

Clamp-on temperature probe (optional) . . . 27
Technical data . . . 27
Fixation . . . 28
Junction box . . . 28

Inline temperature probe (optional) . . . 29

Function

Measurement principle

The transducers are mounted on the pipe which is completely filled with the fluid. The ultrasonic signals are emitted alternately by a transducer and received by the other. The physical quantities are determined from the transit times of the ultrasonic signals.

Path of the ultrasonic signal in the flowing fluid

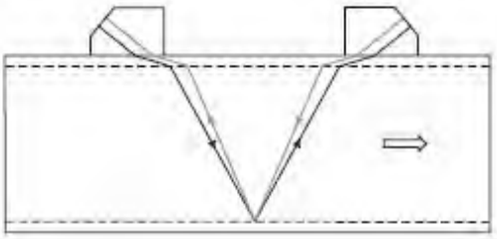

Transit time difference principle

As the fluid where the ultrasound propagates is flowing, the transit time of the ultrasonic signal in flow direction is shorter than the one against the flow direction.

The transit time difference Δt is measured and allows the flowmeter to determine the average flow velocity along the propagation path of the ultrasonic signals. A flow profile correction is then performed in order to obtain the area averaged flow velocity, which is proportional to the volumetric flow rate.

The integrated microprocessors control the entire measuring cycle. The received ultrasonic signals are checked for measurement usability and evaluated for their reliability. Noise signals are eliminated.

Transit time difference Δt

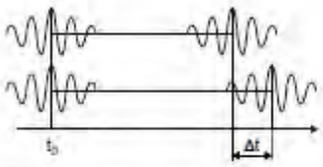

HybridTrek

If the gaseous or solid content in the fluid increases occasionally during measurement, a measurement with the transit time difference principle may no longer be possible. NoiseTrek mode will then be selected by the flowmeter. This measurement method allows the flowmeter to achieve a stable measurement even with high gaseous or solid content.

The transmitter can switch automatically between transit time and NoiseTrek mode without any changes to the measurement setup.

Calculation of volumetric flow rate

$$\dot{V} = k_{Re} \cdot A \cdot k_a \cdot \frac{\Delta t}{2 \cdot t_f}$$

where

$\dot{V}$	-	volumetric flow rate
k_{Re}	-	fluid mechanics calibration factor
A	-	cross-sectional pipe area
k_a	-	acoustical calibration factor
Δt	-	transit time difference
t_f	-	average of transit times in the fluid

Number of sound paths

The number of sound paths is the number of transits of the ultrasonic signal through the fluid in the pipe. Depending on the number of sound paths, the following methods of installation exist:

- **reflect arrangement**
  The number of sound paths is even. The transducers are mounted on the same side of the pipe. Correct positioning of the transducers is easier.
- **diagonal arrangement**
  The number of sound paths is odd. The transducers are mounted on opposite sides of the pipe.
- **direct mode**
  Diagonal arrangement with 1 sound path. This should be used in the case of a high signal attenuation by the fluid, pipe or coatings.

The preferred method of installation depends on the application. While increasing the number of sound paths increases the accuracy of the measurement, signal attenuation increases as well. The optimum number of sound paths for the parameters of the application will be determined automatically by the transmitter.

As the transducers can be mounted with the transducer mounting fixture in reflect arrangement or diagonal arrangement, the number of sound paths can be adjusted optimally for the application.

Reflect arrangement, number of sound paths: 2

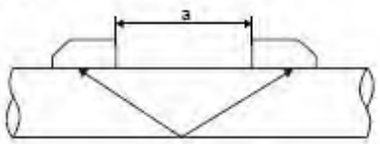

Diagonal arrangement, number of sound paths: 3

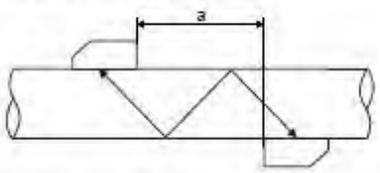

Direct mode, number of sound paths: 1

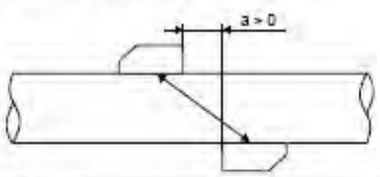

Direct mode, number of sound paths: 1, negative transducer distance

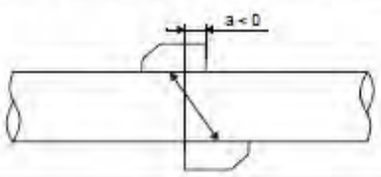

a - transducer distance

Transmitter

Technical data

		FLUXUS F721**-NN0*A	FLUXUS F721**-NN0*S	FLUXUS F721**-A20*S	FLUXUS F721**-F20*S
design		standard field device nonEx	field device with stainless steel housing nonEx	field device with stainless steel housing zone 2	field device with stainless steel housing FM Class I Div. 2
measurement					
measurement principle		transit time difference correlation principle, automatic NoiseTrek selection for measurements with high gaseous or solid content			
flow velocity	ft/s	0.03 to 82			
repeatability		0.15 % of reading ±0.03 ft/s			
fluid		all acoustically conductive liquids with < 10 % gaseous or solid content in volume (transit time difference principle)			
temperature compensation		corresponding to the recommendations in ANSI/ASME MFC-5.1-2011			
measurement uncertainty[1]					
with calibration traceable to NIST		±1.2 % of reading ±0.03 ft/s			
with field calibration[2]		±0.5 % of reading ±0.03 ft/s			
transmitter					
power supply		• 100 to 230 V/50 to 60 Hz or • 20 to 32 V DC or • 11 to 16 V DC			
power consumption	W	< 15			
number of measuring channels		1, optional: 2			
damping	s	0 to 100 (adjustable)			
measuring cycle	Hz	100 to 1000 (1 channel)			
response time	s	1 (1 channel), option: 0.02			
housing material		aluminum, powder coated	stainless steel 316L		
degree of protection		IP65	IP65	IP66	IP65
dimensions	in	see dimensional drawing			
weight	lb	11.9	11.2		
fixation		wall mounting, optional: 2" pipe mounting			
ambient temperature	°F	-4 to +131/140 °F	-4 to +131/140 °F	-40 to +140 °F (<-4 °F without operation of the display)	-4 to +131/140 °F
display		128 x 64 dots, backlight			
menu language		English, German, French, Spanish, Dutch, Russian, Polish, Turkish			
explosion protection					
• ATEX/IECEx					
marking		-	-	CE 0637 Ex II3G II2D Ex nA nC ic IIC T4 Gc Ex tb IIIC T 120 °C Db T_a -40 to +60 °C	-
certification ATEX		-	-	IBExU11ATEX1015	-
certification IECEx		-	-	IECEx IBE 11.0008	-
• FM					
marking		-	-	-	F703Z2**1, F703Z2**2: NI/CI. I,II,III/Div. 2/ GP. A,B,C,D,E,F,G/ T5 Ta = 60 °C F703Z2**9: NI/CI. I,II,III/Div. 2/ GP. A,B,C,D,E,F,G/ T4A Ta = 55 °C

[1] for transit time difference principle, reference conditions and v > 0.49 ft/s
[2] reference uncertainty < 0.2 %
[3] outside of explosive atmosphere (housing cover open)
[4] with inputs and including parametrization of the transmitter

		FLUXUS F721**-NN0*A	FLUXUS F721**-NN0*S	FLUXUS F721**-A20*S	FLUXUS F721**-F20*S
measuring functions					
physical quantities		volumetric flow rate, mass flow rate, flow velocity, thermal energy rate (if temperature inputs are installed)			
totalizer		volume, mass, optional: thermal energy			
calculation functions		average, difference, sum (2 measuring channels necessary)			
diagnostic functions		sound speed, signal amplitude, SNR, SCNR, standard deviation of amplitudes and transit times			
communication interfaces					
service interfaces		measured value transmission, parametrization of the transmitter: • USB[3] • LAN[3]			
process interfaces		max. 1 option: • RS485 (ASCII sender) • Modbus RTU[4] • BACnet MS/TP • HART[4] • Profibus PA[4] • FF H1[4] • Modbus TCP[4] • BACnet IP	max. 1 option: • RS485 (ASCII sender) • Modbus RTU[4] • BACnet MS/TP • HART[4] • Profibus PA[4] • FF H1[4] • Modbus TCP[4] • BACnet IP	max. 1 option: • RS485 (ASCII sender) • Modbus RTU[4] • BACnet MS/TP • HART[4] • Profibus PA[4] • FF H1[4] • Modbus TCP[4] • BACnet IP	
accessories					
serial data kit		USB cable[3]			
software		• FluxDiagReader: download of measured values and parameters, graphical presentation • FluxDiag (optional): download of measurement data, graphical presentation, report generation, parametrization of the transmitter			
data logger					
loggable values		all physical quantities, totalized values and diagnostic values			
capacity		max. 800 000 measured values			
outputs					
		The outputs are galvanically isolated from the transmitter.			
number		on request			
• switchable current output					
		The switchable current outputs are menu selectable all together as passive or active.			
range	mA	4 to 20 (3.2 to 22)			
accuracy		0.04 % of reading ±3 µA			
active output		R_{ext} < 350 Ω			
passive output		U_{ext} = 8 to 30 V, depending on R_{ext} (R_{ext} < 1 kΩ at 30 V)			
• HART					
range	mA	4 to 20			
accuracy		0.1 % of reading ±15 µA			
active output		U_{int} = 24 V, R_{ext} < 500 Ω			
passive output		U_{ext} = 10 to 24 V DC, depending on R_{ext} (R_{ext} < 1 kΩ at 24 V)			
• voltage output					
range	V	0 to 1 or 0 to 10			
accuracy		0 to 1 V: 0.1 % of reading ±1 mV 0 to 10 V: 0.1 % of reading ±10 mV			
internal resistance		R_{int} = 500 Ω			
• frequency output					
range	kHz	0 to 5			
optorelay		24 V/4 mA, R_{int} = 66.5 Ω			
• binary output					
optorelay		26 V/100 mA, R_{int} = 22 Ω			
Reed relay		48 V/100 mA, R_{int} = 22 Ω			
binary output as alarm output					
• functions		limit, change of flow direction or error			
binary output as pulse output					
• functions		mainly for totalizing			
• pulse value	units	0.01 to 1000			
• pulse width	ms	optorelay: 1 to 1000 Reed relay: 80 to 1000			

[1] for transit time difference principle, reference conditions and v > 0.49 ft/s

[2] reference uncertainty < 0.2 %

[3] outside of explosive atmosphere (housing cover open)

[4] with inputs and including parametrization of the transmitter

		FLUXUS F721**-NN0*A	FLUXUS F721**-NN0*S	FLUXUS F721**-A20*S	FLUXUS F721**-F20*S
inputs					
		The inputs are galvanically isolated from the transmitter.			
number		max. 4, on request			
• temperature input					
type		Pt100/Pt1000			
connection		4-wire			
range	°F	-236 to +1040			
resolution	K	0.01			
accuracy		±0.01 % of reading ±0.03 K			
• current input					
accuracy		0.1 % of reading ±10 µA			
active input • range	 mA	U_{int} = 24 V, R_{int} = 50 Ω, P_{int} < 0.5 W, not short-circuit proof 0 to 20			
passive input • range	 mA	R_{int} = 50 Ω, P_{int} < 0.3 W -20 to +20			
• voltage input					
range	V	0 to 1			
accuracy		0.1 % of reading ±1 mV			
internal resistance		R_{int} = 1 MΩ			
• binary input					
switching signal		5 to 30 V, 1 mA	5 to 30 V, 1 mA		5 to 26 V, 1 mA
functions		• resetting the measured values • resetting the totalizers • stopping the totalizers • activation of the measuring mode for highly dynamic flows			

[1] for transit time difference principle, reference conditions and v > 0.49 ft/s

[2] reference uncertainty < 0.2 %

[3] outside of explosive atmosphere (housing cover open)

[4] with inputs and including parametrization of the transmitter

Dimensions

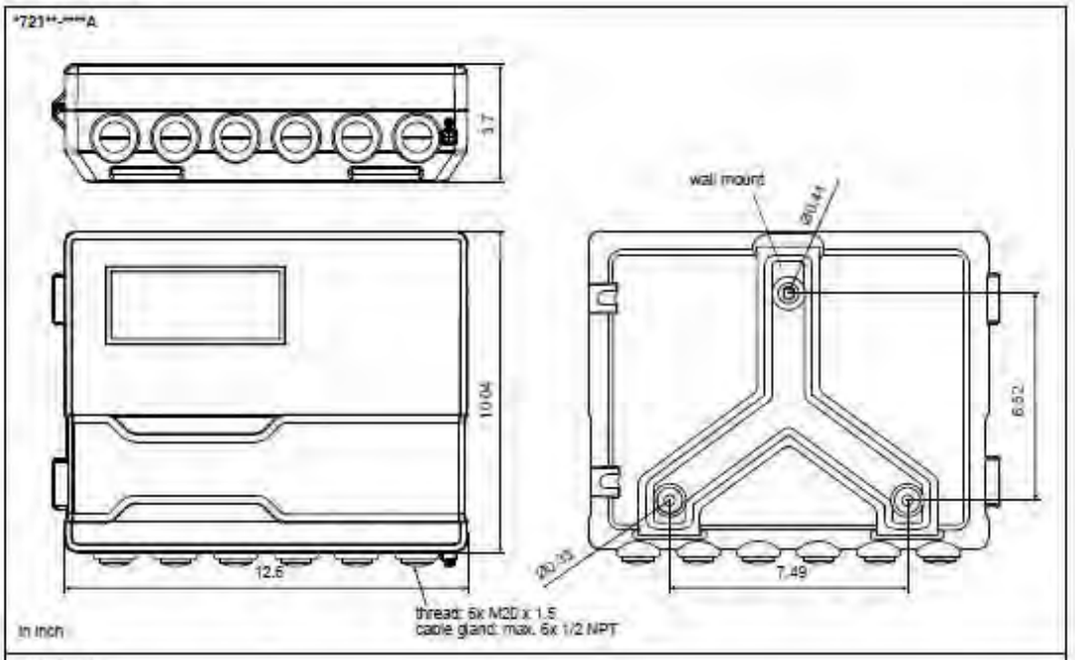
*721**-***A
3.7
wall mount
10.04
6.52
12.6
7.49
thread: 6x M20 x 1.5
cable gland: max. 6x 1/2 NPT
in inch

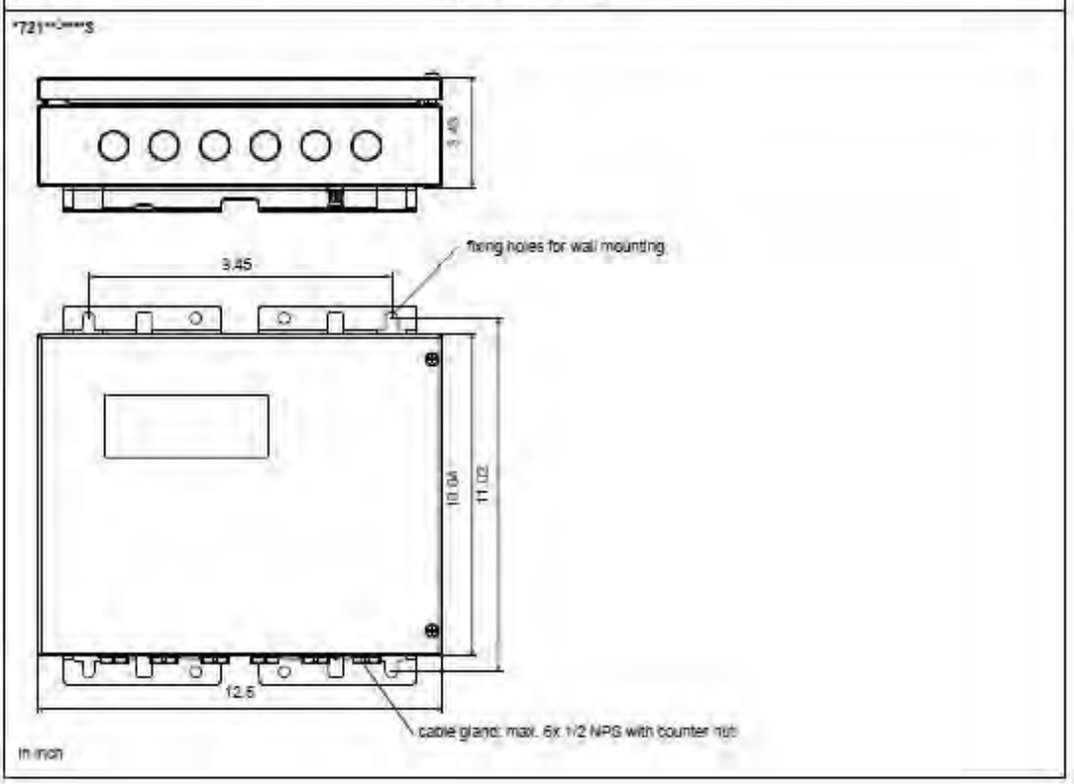
*721**-***S
3.45
fixing holes for wall mounting
3.45
10.04
11.02
12.6
cable gland: max. 6x 1/2 NPG with counter nut
in inch

2" pipe mounting kit

*721**-***A

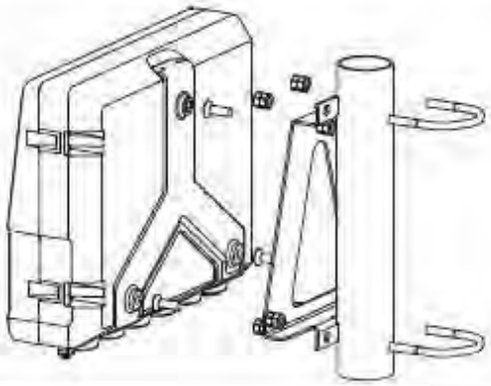

*721**-***S

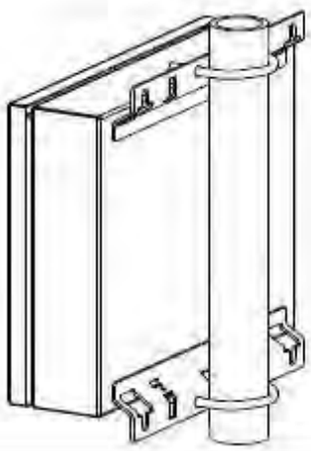

Terminal assignment

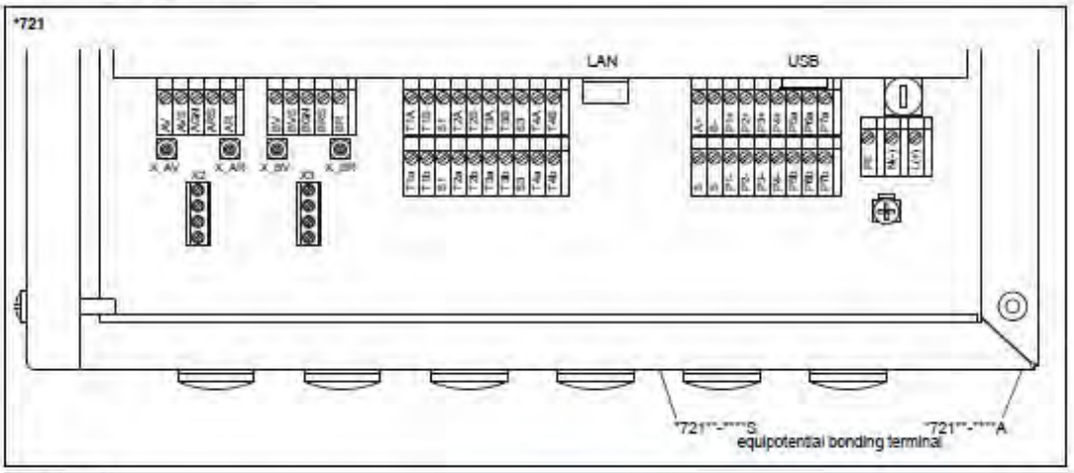

power supply[1]		
terminal	connection (AC)	connection (DC)
PE	earth	earth
N(-)	neutral	-
L(+)	phase	+

transducers							
transducer cable (transducers ****LI*), extension cable					transducer cable (transducers *****52)		
measuring channel A		measuring channel B			measuring channel A	measuring channel B	
terminal	connection	terminal	connection	transducer	terminal		connection
AV	signal	BV	signal		X_AV	X_BV	SMB connector
AVS	shield	BVS	shield				
ARS	shield	BRS	shield		X_AR	X_BR	SMB connector
AR	signal	BR	signal				

outputs[1, 2]				
terminal	connection	terminal	connection	communication interface
P1+ to P4+ P1- to P4-	current output, voltage output, frequency output, binary output (Reed relay), HART (P1)	A+	signal +	• RS485[1] • Modbus RTU[1] • BACnet MS/TP[1] • Profibus PA[1] • FF H1[1]
		B-	signal -	
P5a to P7a P5b to P7b	binary output (optorelay)	S	shield	
		USB	type B	• service (FluxDiag/ FluxDiagReader)
		LAN	RJ45	• service (FluxDiag/ FluxDiagReader) • BACnet IP • Modbus TCP

analog inputs[1, 2]						
	temperature probe				passive sensor	active sensor
terminal	with connector		without connector		connection	connection
	direct connection	connection with extension cable	direct connection	connection with extension cable		
T1a to T4a	red	red	red	white	not connected	not connected
T1A to T4A	red/blue	gray	red	black	-	+
T1b to T4b	white/blue	blue	white	red	+	not connected
T1B to T4B	white	white	white	green	not connected	-
S1, S3	shield	shield	-	-	not connected	not connected

Binary inputs[1, 2]
terminal
P1+ to P2+, P1- to P2-

[1] cable (by customer):
- e.g., flexible leads, with insulated wire end ferrules, lead cross sectional area: AWG14 to 24
- outer diameter of the cable (*721**-****S with ferrite nut): max. 0.3 in

[2] The number, type and terminal assignment will be customized.

Transducers

Transducer selection

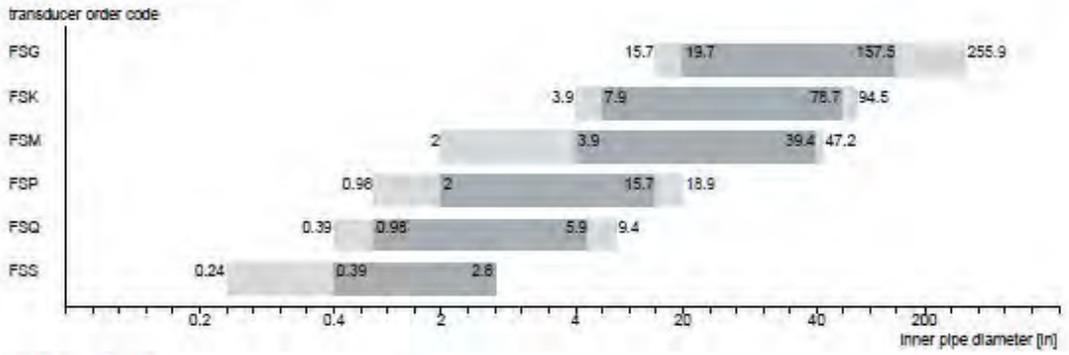

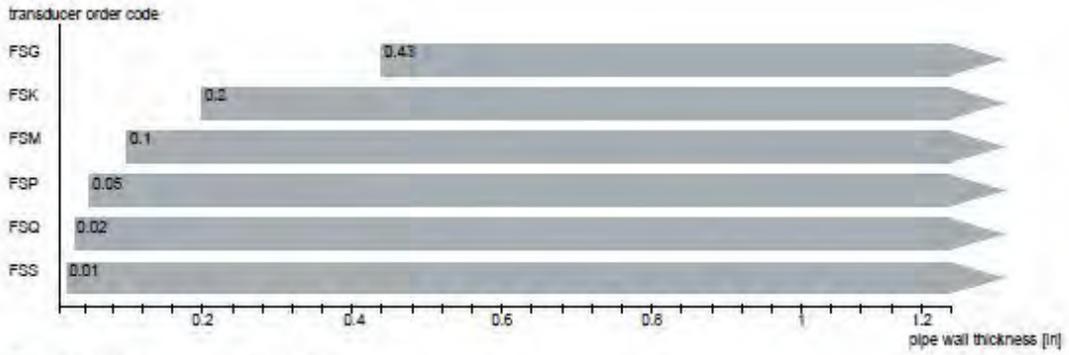

recommended possible

Transducer order code

1, 2	3		4	5, 6	7, 8		9 to 11			no. of character
transducer	transducer frequency	-	ambient temperature	explosion protection	connection system	-	extension cable	/	option	description
FS										set of ultrasonic flow transducers for liquids measurement, shear wave
	G									0.2 MHz
	K									0.5 MHz
	M									1 MHz
	P									2 MHz
	Q									4 MHz
	S									8 MHz
			N							normal temperature range
			E							extended temperature range
				NN						not explosion proof
				A2						ATEX zone 2/IECEx zone 2
				A1						ATEX zone 1/IECEx zone 1
				F2						FM Class I Div. 2
					TS					direct connection or connection via junction box
							XXX			0 m: without extension cable > 0 m: with extension cable
									LC	long transducer cable
									IP68	degree of protection IP68
									OS	housing with stainless steel 316

Technical data

Shear wave transducers (zone 2 - FM Class I Div. 2 - nonEx, TS)

order code		FSG-N**TS/**	FSK-N**TS/**	FSM-N**TS/**	FSP-N**TS/**	FSQ-N**TS/**	FSS-N**TS/**
technical type		C(DL)G1N52	C(DL)K1N52	C(DL)M2N52	C(DL)P2N52	C(DL)Q2N52	CDS1N52
transducer frequency	MHz	0.2	0.5	1	2	4	8
inner pipe diameter d							
min. extended	in	15.7	3.9	2	0.98	0.39	0.24
min. recommended	in	19.7	7.9	3.9	2	0.98	0.39
max. recommended	in	157.5	78.7	39.4	15.7	5.9	2.8
max. extended	in	255.9	94.5	47.2	18.9	9.4	2.8
pipe wall thickness							
min.	in	0.43	0.2	0.1	0.05	0.02	0.01
material							
housing		PEEK with stainless steel cap 304, ***-*****/OS: 316L		PEEK with stainless steel cap 304, ***-*****/OS: 316L			stainless steel 304
contact surface		PEEK		PEEK			PEI
degree of protection		NEMA 6		NEMA 6			NEMA 4
transducer cable							
type		1699		1699			1699
length	ft	16		13		9	6
length (***-*****/LC)	ft	29		29		29	-
dimensions							
length l	in	5.1	4.98	2.52		1.57	0.98
width b	in	2.01	2.01	1.26		0.87	0.51
height h	in	2.64	2.66	1.59		1	0.67
dimensional drawing							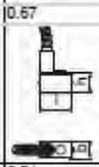
weight (without cable)	lb	1	0.79	0.15		0.04	0.01
ambient temperature							
min.	°F	-40		-40			-22
max.	°F	+266		+266			+266
temperature compensation		x					-
explosion protection							
• ATEX/IECEx							
order code		FSG-NA2TS/**	FSK-NA2TS/**	FSM-NA2TS/**	FSP-NA2TS/**	FSQ-NA2TS/**	-
explosion protection temperature (pipe surface)							
• min.	°C	-55		-55			-
• max.	°C	gas: +190, dust: +180		gas: +190, dust: +180			-
marking		CE 0637 Ex II3G II2D Ex nA IIC T6...T2 Gc Ex tb IIIC TX Db		CE 0637 Ex II3G II2D Ex nA IIC T6...T2 Gc Ex tb IIIC TX Db			-
certification ATEX		IBExU10ATEX1163 X		IBExU10ATEX1163 X			-
certification IECEx		IECEx IBE 12.0005X		IECEx IBE 12.0005X			-
• FM							
order code		FSG-NF2TS/**	FSK-NF2TS/**	FSM-NF2TS/**	FSP-NF2TS/**	FSQ-NF2TS/**	FSS-NF2TS/**
explosion protection temperature							
• min.	°F	-40		-40			-40
• max.	°F	+257		+374			+257
degree of protection		IP66		IP66			IP66
marking		"APPROVED" NI/Cl. I,II,III/Div. 2 / GP A,B,C,D,E,F,G/ Temp. Codes dwg 3860		"APPROVED" NI/Cl. I,II,III/Div. 2 / GP A,B,C,D,E,F,G/ Temp. Codes dwg 3860			"APPROVED" NI/Cl. I,II,III/ Div. 2 / GP A,B,C,D,E,F,G/ Temp. Codes dwg 3860

Shear wave transducers (zone 2 - nonEx, TS, IP68)

order code		FSG-N"TS/IP68	FSK-N"TS/IP68	FSM-N"TS/IP68	FSP-N"TS/IP68
technical type		CDG1LI8	CDK1LI8	CDM2LI8	CDP2LI8
transducer frequency	MHz	0.2	0.5	1	2
inner pipe diameter d					
min. extended	in	15.7	3.9	2	0.98
min. recommended	in	19.7	7.9	3.9	2
max. recommended	in	157.5	78.7	39.4	15.7
max. extended	in	255.9	94.5	47.2	18.9
pipe wall thickness					
min.	in	0.43	0.2	0.1	0.05
material					
housing		PEEK with stainless steel cap 316Ti			
contact surface		PEEK			
degree of protection		IP68[1]			
transducer cable					
type		2550			
length	ft	39			
dimensions					
length l	in	5.12		2.76	
width b	in	2.13		1.26	
height h	in	3.29		1.81	
dimensional drawing		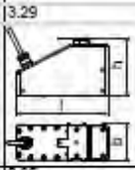			
weight (without cable)	lb	0.95		0.19	
ambient temperature					
min.	°F	-40			
max.	°F	+212			
temperature compensation		x			
explosion protection					
• ATEX/IECEx					
order code		FSG-NA2TS/IP68	FSK-NA2TS/IP68	FSM-NA2TS/IP68	FSP-NA2TS/IP68
explosion protection temperature (pipe surface)					
• min.	°C	-40			
• max.	°C	gas: +90, dust: +80			
marking		CE 0637 Ex II3G II2D Ex nA IIC T6...T2 Gc Ex tb IIIC TX Db			
certification ATEX		IBExU10ATEX1163 X			
certification IECEx		IECEx IBE 12.0005X			

[1] test conditions: 3 months/29 psi (65 ft)/36 °F

Shear wave transducers (zone 2 - FM Class I Div. 2 - nonEx, TS, extended temperature range)

order code		FSM-E**TS/**	FSP-E**TS/**	FSQ-E**TS/**
technical type		C(DL)M2E52	C(DL)P2E52	C(DL)Q2E52
transducer frequency	MHz	1	2	4
inner pipe diameter d				
min. extended	in	2	0.98	0.39
min. recommended	in	3.9	2	0.98
max. recommended	in	39.4	15.7	5.9
max. extended	in	47.2	18.9	9.4
pipe wall thickness				
min.	in	0.1	0.05	0.02
material				
housing		PI with stainless steel cap 304, **-****/OS: 316L		
contact surface		PI		
degree of protection		NEMA 4		
transducer cable				
type		6111		
length	ft	13		9
length (**-****/LC)	ft	29		
dimensions				
length l	in	2.52		1.57
width b	in	1.26		0.87
height h	in	1.59		1
dimensional drawing				
weight (without cable)	lb	0.15		0.04
ambient temperature				
min.	°F	-22		
max.	°F	+392		
temperature com-pensation		x		
explosion protection				
• ATEX/IECEx				
order code		FSM-EA2TS/**	FSP-EA2TS/**	FSQ-EA2TS/**
explosion protection temperature (pipe surface)				
• min.	°C	-45		
• max.	°C	gas: +235, dust: +225		
marking		CE 0637 Ex II3G II2D Ex nA IIC T6...T2 Gc Ex tb IIIA TX Db		
certification ATEX		IBExU10ATEX1153 X		
certification IECEx		IECEx IBE 12.0005X		
• FM				
order code		FSM-EF2TS/**	FSP-EF2TS/**	FSQ-EF2TS/**
explosion protection temperature				
• min.	°F	-40		
• max.	°F	+455		
degree of protection		IP66		
marking		"****" NI/Cl. I,II,III/Div. 2 / GP A,B,C,D,E,F,G/ Temp. Codes dwg 3660		

Shear wave transducers (zone 1, TS)

order code		FSG-N*1TS/**	FSK-N*1TS/**	FSM-N*1TS/**	FSP-N*1TS/**	FSQ-N*1TS/**
technical type		C(DL)G1N81	C(DL)K1N81	C(DL)M2N81	C(DL)P2N81	C(DL)Q2N81
transducer frequency	MHz	0.2	0.5	1	2	4
inner pipe diameter d						
min. extended	in	15.7	3.9	2	0.98	0.39
min. recommended	in	19.7	7.9	3.9	2	0.98
max. recommended	in	157.5	78.7	39.4	15.7	5.9
max. extended	in	255.9	94.5	47.2	18.9	9.4
pipe wall thickness						
min.	in	0.43	0.2	0.1	0.05	0.02
material						
housing		PEEK with stainless steel cap 304 , ***-****/OS: 316L				
contact surface		PEEK				
degree of protection		IP65	IP66			IP65
transducer cable						
type		1699				
length	ft	16		13		9
length (***-****/LC)	ft	29				
dimensions						
length l	in	5.1	4.98	2.52		1.57
width b	in	2.01	2.01	1.26		0.87
height h	in	2.64	2.66	1.59		1
dimensional drawing						
weight (without cable)	lb	1	0.79	0.15		0.04
ambient temperature						
min.	°F	-40				
max.	°F	+266				
temperature com-pensation		x				
explosion protection						
• ATEX/IECEx						
order code		FSG-NA1TS/**	FSK-NA1TS/**	FSM-NA1TS/**	FSP-NA1TS/**	FSQ-NA1TS/**
explosion protection temperature (pipe surface)						
• min.	°C	-55				
• max.	°C	+180				
marking		CE 0637 Ex II2G II2D Ex q IIC T6...T3 Gb Ex tb IIIC TX Db				
certification ATEX		IBExU07ATEX1168 X				
certification IECEx		IECEx IBE 08.0007X				

Shear wave transducers (zone 1, TS, IP68)

order code		FSG-N*1TS/IP68	FSK-N*1TS/IP68	FSM-N*1TS/IP68	FSP-N*1TS/IP68
technical type		CDG1LI1	CDK1LI1	CDM2LI1	CDP2LI1
transducer frequency	MHz	0.2	0.5	1	2
inner pipe diameter d					
min. extended	in	15.7	3.9	2	0.98
min. recommended	in	19.7	7.9	3.9	2
max. recommended	in	157.5	78.7	39.4	15.7
max. extended	in	255.9	94.5	47.2	18.9
pipe wall thickness					
min.	in	0.43	0.2	0.1	0.05
material					
housing		PEEK with stainless steel cap 316Ti			
contact surface		PEEK			
degree of protection		IP68[1]			
transducer cable					
type		2550			
length	ft	39			
dimensions					
length l	in	5.12		2.76	
width b	in	2.13		1.26	
height h	in	3.29		1.81	
dimensional drawing		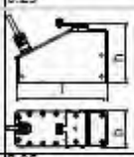			
weight (without cable)	lb	0.95		0.19	
ambient temperature					
min.	°F	-40			
max.	°F	+212			
temperature compensation		x			
explosion protection					
• ATEX/IECEx					
order code		FSG-NA1TS/IP68	FSK-NA1TS/IP68	FSM-NA1TS/IP68	FSP-NA1TS/IP68
explosion protection temperature (pipe surface)					
• min.	°C	-55			
• max.	°C	+180			
marking		CE 0637 Ex II2G II2D Ex q IIC T6...T3 Gb Ex tb IIIC TX Db			
certification ATEX		IBExU07ATEX1168 X			
certification IECEx		IECEx IBE 08.0007X			

[1] test conditions: 3 months/29 psi (65 ft)/36 °F

Shear wave transducers (zone 1, TS, extended temperature range)

order code		FSM-E*1TS/**	FSP-E*1TS/**	FSQ-E*1TS/**
technical type		C(DL)M2E85	C(DL)P2E85	C(DL)Q2E85
transducer frequency	MHz	1	2	4
inner pipe diameter d				
min. extended	in	2	0.98	0.39
min. recommended	in	3.9	2	0.98
max. recommended	in	39.4	15.7	5.9
max. extended	in	47.2	18.9	9.4
pipe wall thickness				
min.	in	0.1	0.05	0.02
material				
housing		PI with stainless steel cap 304, ***-****/OS: 316L		
contact surface		PI		
degree of protection		IP66		IP55
transducer cable				
type		6111		
length	ft	13		9
length (***-****/LC)	ft	29		
dimensions				
length l	in	2.52		1.57
width b	in	1.26		0.87
height h	in	1.59		1
dimensional drawing				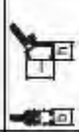
weight (without cable)	lb	0.15		0.04
ambient temperature				
min.	°F	-22		
max.	°F	+392		
temperature compensation		x		
explosion protection				
• ATEX/IECEx				
order code		FSM-EA1TS/**	FSP-EA1TS/**	FSQ-EA1TS/**
explosion protection temperature (pipe surface)				
• min.	°C	-45		
• max.	°C	+225		
marking		CE 0637 Ex II2G II2D Ex q IIC T6...T2 Gb Ex tb IIIA Tx Db		
certification ATEX		IBExU07ATEX1168 X		
certification IECEx		IECEx IBE 08.0007X		

Transducer mounting fixture

Order code

1, 2	3		4	5		6	7 to 9			no. of character
transducer mounting fixture	transducer	-	measurement arrangement	size	-	fixation	outer pipe diameter	/	option	description
PL										PermaLok
VL										PermaRail
WI										transducer box for WaveInjector
	K									transducers with transducer frequency G, K
	M									transducers with transducer frequency M, P
	Q									transducers with transducer frequency Q
	S									transducers with transducer frequency S
			D							reflect arrangement or diagonal arrangement/direct mode
			R							reflect arrangement
				S						small
				M						medium
				L						large
						B				bolts
						S				tension straps
						W				welding
						N				without fixation
							SK1			0.5 to 2.5 in
							SK2			3 to 6 in
							SK3			8 to 10 in
							SK4			12 to 18 in
							SK5			20 to 36 in
							SK6			42 to 100 in
							SK7			100 to 170 in
							SK8			170 to 370 in
							NDR			any
									IP68	for transducers with degree of protection IP68
									OS	housing with stainless steel 316
									Z	special design

PermaRail (VLS) 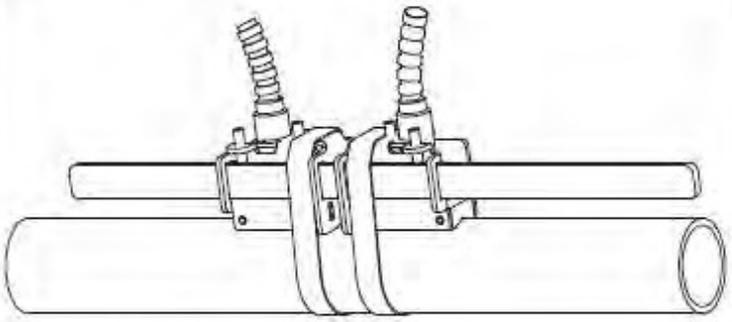	transducer frequency: S material: stainless steel 304, 303
PermaRail (VLK, VLM, VLQ) 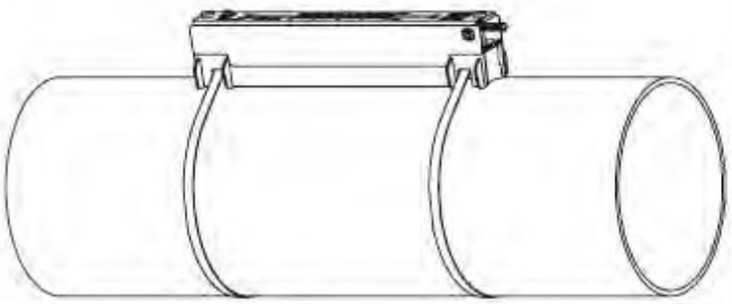	material: stainless steel 304, 301, 410 option OS: 316Ti, 316L, 17-7PH inner length: **VLK**: 13.7 in, option IP68: 14.5 in **VLM**: 9.2 in **VLQ**: 6.9 in dimensions: **VLK**: 16.65 x 3.54 x 3.66 in option IP68: 17.44 x 3.7 x 4.13 in **VLM**: 12.17 x 2.24 x 2.48 in **VLQ**: 9.72 x 1.69 x 1.85 in
PermaRail with bolt mounting plates (VL*--B)** 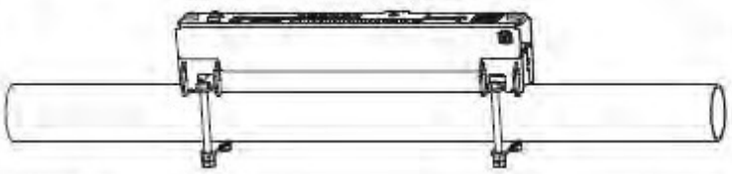	material: stainless steel 304, 301, 410 option OS: 316Ti, 316L, 17-7PH inner length: **VLM**: 9.2 in **VLQ**: 6.9 in dimensions: **VLM**: 12.17 x 2.24 x 2.48 in **VLQ**: 9.72 x 1.69 x 1.85 in outer pipe diameter: max. 1.9 in
PermaLok PL 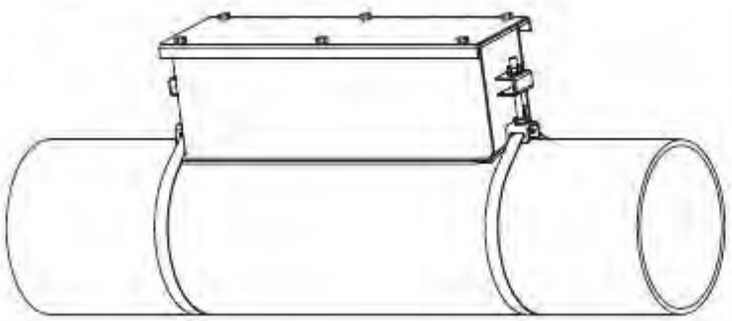	material: stainless steel 316

quick release clasp and tension straps 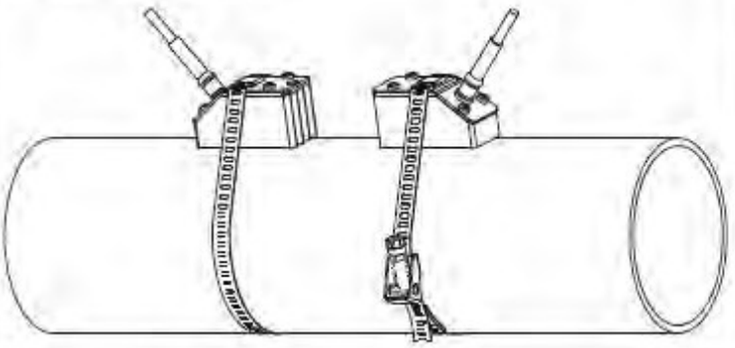	material: stainless steel 410, 200
transducer box WI for WaveInjector 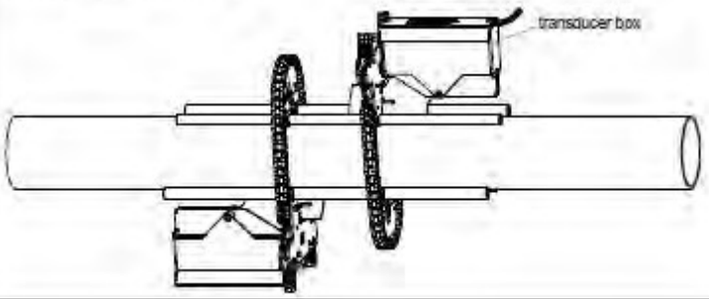	see Technical specification TSWaveInjectorVx-x

Coupling materials for transducers

	normal temperature range (4th character of transducer order code = N)		extended temperature range (4th character of transducer order code = E)		Waveinjector WI-400	
	< 212 °F	< 338 °F	< 302 °F	< 392 °F	< 536 °F	536 to 752 °F
< 24 h	coupling compound type N or coupling pad type VT	coupling compound type E or coupling pad type VT	coupling compound type E or coupling pad type VT	coupling compound type E or H or coupling pad type VT	coupling pad type A and coupling pad type VT	coupling pad type B and coupling pad type VT
long time measurement	coupling pad type VT[1]	coupling pad type VT[2]	coupling pad type VT[1]	coupling pad type VT[2]	coupling pad type A and coupling pad type VT	coupling pad type B and coupling pad type VT

[1] < 5 years

[2] < 6 months

Technical data

type	ambient temperature °F	material
coupling compound type N	-22 to +266	mineral grease paste
coupling compound type E	-22 to +392	silicone paste
coupling compound type H	-22 to +482	fluoropolymer paste
coupling pad type A	max. 536	lead
coupling pad type B	> 536 to 752	silver
coupling pad type VT	14 to +392	fluoroelastomer

Connection systems

connection system TS		
connection with extension cable	direct connection	transducers technical type
JB01 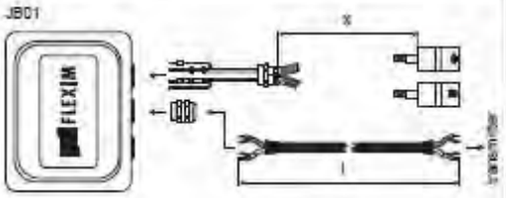	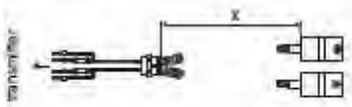	"8"
JBP3 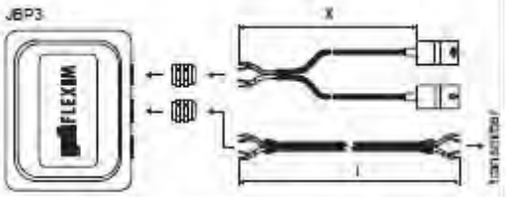	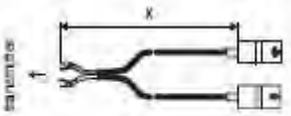	"D"
JB02, JB03, JB04 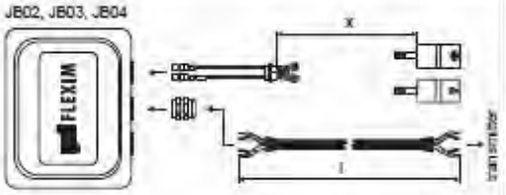	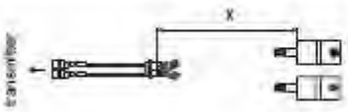	"S2"

Cable

transducer cable				
type		**1699**	**2550**	**6111**
weight	lb/ft	0.06	0.02	0.06
ambient temperature	°F	-67 to +392	-40 to +212	-148 to +437
properties			longitudinal watertight	
cable jacket				
material		PTFE	PUR	PFA
outer diameter	in	0.11	0.2 ±0.01	0.11
thickness	in	0.01	0.04	0.02
color		brown	gray	white
shield		x	x	x
sheath				
material		stainless steel 304 option OS: 316Ti	-	stainless steel 304 option OS: 316Ti
outer diameter	in	0.31	-	0.31

extension cable			
type		**2615**	**5245**
weight	lb/ft	0.12	0.26
ambient temperature	°F	-22 to +158	-22 to +158
properties		halogen free fire propagation test according to IEC 60332-1 combustion test according to IEC 60754-2	halogen free fire propagation test according to IEC 60332-1 combustion test according to IEC 60754-2
cable jacket			
material		PUR	PUR
outer diameter	in	0.47	0.47
thickness	in	0.08	0.08
color		black	black
shield		x	x
sheath			
material		-	steel wire braid with copolymer sheath
outer diameter	in	-	0.61

Cable length

transducer frequency		F, G, H, K		M, P		Q		S	
connection system TS									
transducers technical type		x	l	x	l	x	l	x	l
"(DR)***8"	ft	16	≤ 984	13	≤ 984	9	≤ 295	-	-
option LC: "(LT)***8"	ft	29	≤ 984	29	≤ 984	29	≤ 295	-	-
"(DR)***5"	ft	16	≤ 984	13	≤ 984	9	≤ 295	6	≤ 131
option LC: "(LT)***5"	ft	29	≤ 984	29	≤ 984	29	≤ 295	-	-
option IP68: "***LI"	ft	39	≤ 984	39	≤ 984	-	-	-	-

x = transducer cable length

l = max. length of extension cable (depending on application)

Junction box

Technical data

JB01S4E3M, JBP2, JBP3		
weight	lb	2.6 lb
fixation		wall mounting optional: 2" pipe mounting
material		
housing		stainless steel 316L
gasket		silicone
degree of protection		NEMA 6
ambient temperature		
min.	°F	-40
max.	°F	+176
explosion protection		
• ATEX/IECEx (zone 1)		
junction box		JB01S4E3M
marking		CE 0637 Ex II2G II2D Ex e mb IIC (T6)...T4 Gb Ex tb IIIC T 100 °C Db Ta -40...+(70)80 °C
certification ATEX		IBExU06ATEX1161
certification IECEx		IECEx IBE 06.0006
type of protection		gas: increased safety decoupled network: encapsulation dust: protection by enclosure
• ATEX (zone 2)		
junction box		JBP2
marking		CE Ex II3G Ex nA IIC (T6)...T4 Gc II3D Ex tc IIIC T 100 °C Dc Ta -40...+(70)80 °C

connection

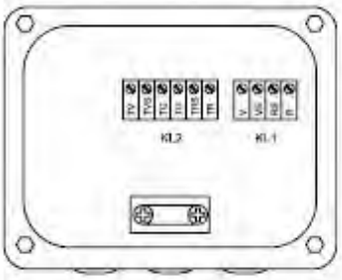

transducers

terminal strip	terminal	connection	transducer
KL1	V	signal	
	VS	internal shield	
	RS	internal shield	
	R	signal	

extension cable

terminal strip	terminal	connection
KL2	TV	signal
	TVS	internal shield
	TRS	internal shield
	TR	signal

JB02, JB03, JB04		
weight	lb	2.6 lb
fixation		wall mounting optional: 2" pipe mounting
material		
housing		stainless steel 316L
gasket		silicone
degree of protection		IP67
ambient temperature		
min.	°F	-40
max.	°F	+176
explosion protection		
• ATEX		
junction box		JB02
marking		CE Ex II3G Ex nA IIC (T6)...T4 Gc II3D Ex tc IIIC T 100 °C Dc Ta -40...+(70)80 °C
• FM		
junction box		JB04
marking		NI/Cl. I,II,III/Div. 2 / GP A,B,C,D,E,F,G/ T6 Ta = -40...+60 °C

connection

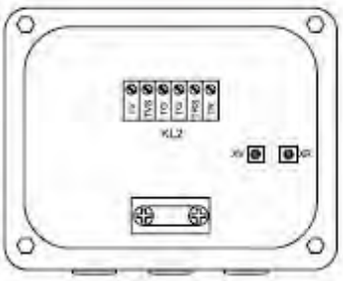

transducers

	terminal	connection	transducer
	XV	SMB connector	
	XR	SMB connector	

extension cable

terminal strip	terminal	connection
KL2	TV	signal
	TVS	internal shield
	TRS	internal shield
	TR	signal

Dimensions

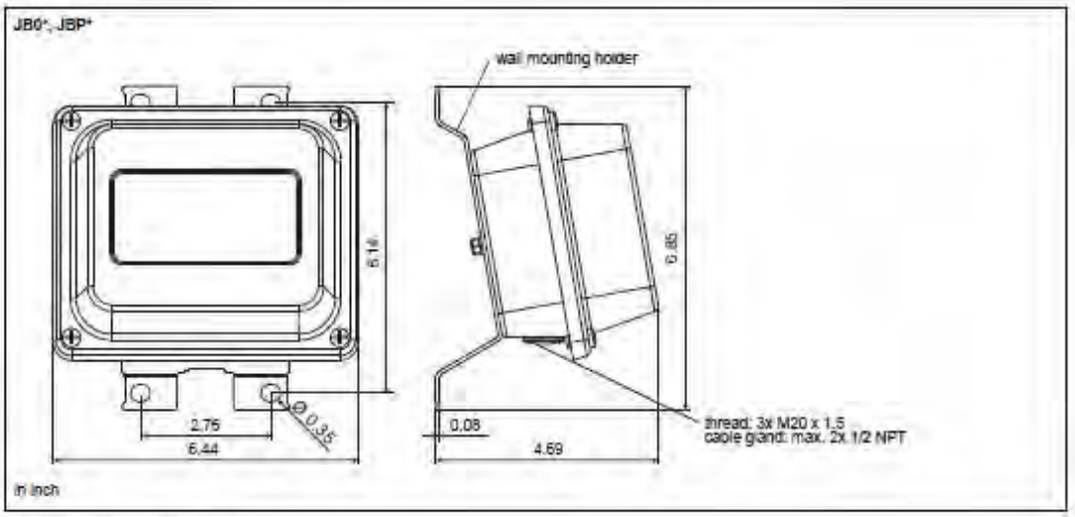

2" pipe mounting kit

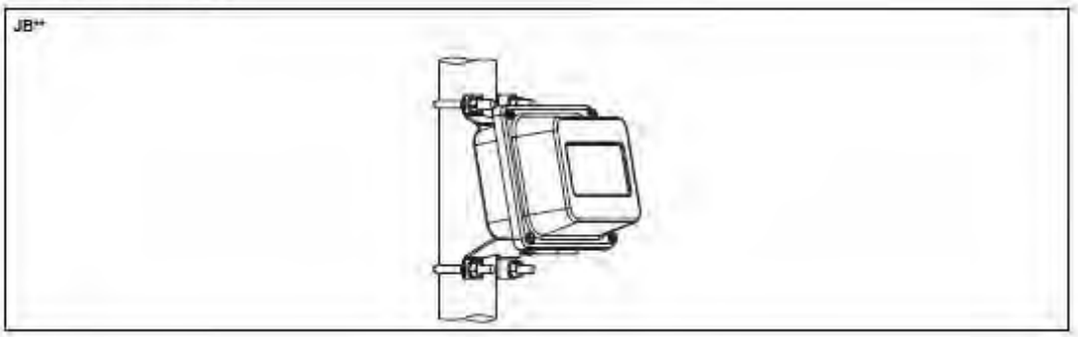

Clamp-on temperature probe (optional)

Technical data

PT13N		
design		clamp-on
type		Pt1000
connection		4-wire
measuring range	°F	-40 to +392
accuracy T		±(0.27 °F + 2 · 10^{-3} · |T [°F]| - 32 °F)) class A
accuracy ΔT (2x Pt matched according to EN 1434-1)		≤ 0.03 °F (at 50 °F)
housing		360 brass alloy
degree of protection		NEMA 4
dimensions		
length l	in	0.79
width b	in	0.59
height h	in	0.49
dimensional drawing		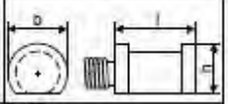
weight	lb	0.437
accessories		
thermal conductivity foil 482 °F		x

connection system

connection with extension cable	direct connection
extension cable 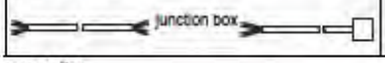	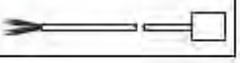

connection

	temperature probe	extension cable
	red	red
	red	red
	white	white
	white	white

cable

		temperature probe	extension cable
type		4 x 24 AWG	4 x 18 AWG
standard length	ft	20	-
max. length	ft	-	656
cable jacket		PTFE	LS PVC

PT13F		
design		clamp-on short response time
type		Pt1000
connection		4-wire
measuring range	°F	-58 to +482
accuracy T		±(0.27 °F + 2 · 10^{-3} · |T [°F]| - 32 °F)) class A
accuracy ΔT (2x Pt matched according to EN 1434-1)		≤ 0.1 K (3 K < ΔT < 5 K), more corresponding to EN 1434
response time	s	8
housing		PEEK, stainless steel 304, copper
degree of protection		NEMA 4
dimensions		
length l	in	0.55
width b	in	1.18
height h	in	1.06
dimensional drawing		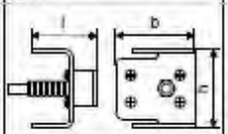
weight	lb	0.7
accessories		
thermal conductivity paste 392 °F		x
thermal conductivity foil 482 °F		x
plastic protection plate, insulation foam		x

connection system

connection with extension cable	direct connection
extension cable 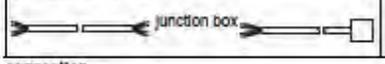	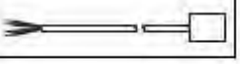

connection

	temperature probe
	red
	red/blue
	white/blue
	white

cable

		temperature probe	extension cable
type		4 x 0.25 mm² black	4 x 18 AWG
standard length	ft	9	-
max. length	ft	-	656
cable jacket		PTFE	PVC

Fixation

tension strap PT13N 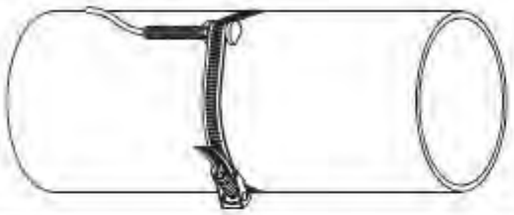	material: stainless steel 301, 410
ball chain PT13F 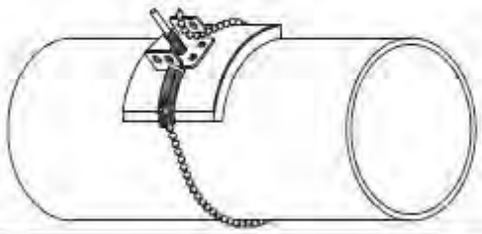	material: stainless steel 316L length: 3 ft

Junction box

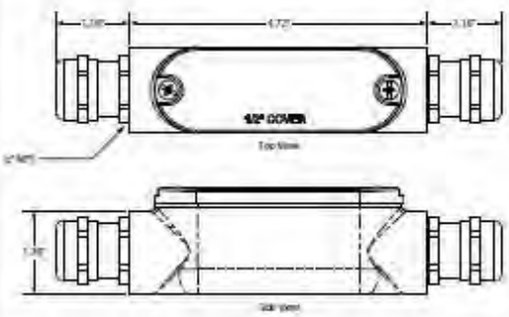

connection

temperature probe	extension cable
red	white
red	black
white	green
white	red

Inline temperature probe (optional)

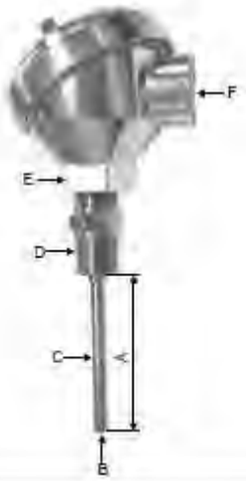

	type	Pt1000
A	insertion length	6" or specified length
B	resistance	1 000 Ω, 00385
C	insertion length	6" or specified length
	sheath material	stainless steel 316
D	thread	1/2" NPT HEX CPLG. spring loaded
E	head	aluminum screw cover head 4 terminal block
F	thread	3/4" NPT

Click here to return to Limitorque (PS)

Click here to return to Limitorque (TP)

Click here to return to Limitorque (TP2)

XI. Exhibit P

FLOWSERVE

Limitorque® MX Series B
Smart Electric Actuator

Experience In Motion

Flowserve Limitorque actuation systems

Limitorque is an operating unit of Flowserve, a $3.5 billion-a-year company strongly focused on the automation and support of the valve industry. Flowserve is the world's premier provider of flow management services.

Limitorque has evolved over 80 years since its strategic introduction of a "torque-limiting" design that changed an industry. Flowserve Limitorque offers solutions and automation choices for customers which provide:

- Cost savings from field devices such as electric valve actuators
- Greater operating efficiencies from control room performance sequencing, interlocking and continuous process optimization
- Competitive advantages derived from increased management visibility of databases and networks

SMB (1964)

L120 (1985)

MXb (2020)

MX (2000)

2 Flowserve.com

MXb actuator: The next generation in smart actuation

Limitorque MXb: unmatched reliability, precision, advanced diagnostics capabilities and a streamlined user experience.

Flowserve Limitorque introduced the MX electric actuator in 1997 as the first smart actuator that provided uncompromised reliability and performance in a design that was easy to use. The MX actuator innovations, which were market firsts — a unique absolute encoder that doesn't require battery back-up; LimiGard™ technology; easy-to-use menus in six languages; and the use of Hall effect devices to eliminate potentially troublesome reed switches — have been improved.

The MXb actuator is Limitorque's next-generation, high-performance unit, offering superior reliability, enhanced analytics and an improved user experience.

Enhanced user experience

Up to 50% faster commissioning, setup and operation from a simplified menu structure

An updated user interface coupled with a simplified, intuitive menu structure makes navigation easy and ensures a smooth, error-free setup process. The new intuitive and configurable menu structure caters to all knowledge and expertise levels by offering multiple configuration options. A quick-setup option ensures rapid and secure basic commissioning, while the advanced setup option allows the actuator to be tailored to the desired application.

Improved legibility owing to a larger, high-resolution LCD screen that extends viewing distance and detail

The larger, higher-resolution LCD display makes the information and status easily legible from as far as 9.1 m (30 ft). The new LCD display is twice as large as the display on the previous MX model and provides eight times more resolution. The built-in ambient light sensor coupled with smart software allows dynamic brightness and contrast regulation for improved visibility in all lighting conditions.

Enhanced visualization of operational graphs, logs and trends data

The advanced display uses improved graphics to provide an enriched visualization and data interpretation experience. Real-time torque graphs, alarm and event logs, and other data are accessible in higher-quality resolution.

Advanced diagnostics and analytics

Increased memory with real-time clock (RTC) improves the quality of data captured

The MXb actuator has 500 times the memory capacity of the previous MX model. A larger memory capacity allows increased data capture and storage for a higher degree of process monitoring, data logging and information feedback. Additionally, the RTC allows data logs to be time stamped in order to support asset management functions and lifecycle analysis.

Advanced diagnostics provide greater process visibility and control

An enhanced, NAMUR NE107-compliant, diagnostic notification system provides process performance monitoring by alerting the operator of potential future failures with alarm and event conditions through an internationally accepted symbol standard.

Improved reliability

Isolated input/outputs to improve protection from outside interference

In addition to its non-intrusive construction, the design isolates critical components to ensure higher reliability by addressing electronics survivability, especially in extreme environments where the equipment is subject to electrical shock and interference.

Longer service life from higher-rated components for extended operating ranges and mean time between failure (MTBF)

High MTBF-rated components and a reinforced housing provide increased robustness and reliable functionality. The use of higher-rated components and materials ensures thermal and resistance ratings that meet and go beyond application needs.

Simplified maintenance

A new electronic connector design removes the need for brackets and hold-downs, making maintenance operations easier and faster. The enhanced connector design ensures robust connectivity throughout the rated seismic and vibration envelope.

Backward interchangeability

The MXb actuator's display and control electronics assembly are backward-compatible and can be easily retrofitted to previous MX actuator models **through conversion kits.**

The performance you expect with the simplicity you want

Speed, precision and simplicity

The MXb actuator's control panel features a 240x160-pixel resolution LCD with configurable temperature and ambient lighting compensation control for LCD backlight. The larger, higher-resolution LCD display allows customers the ability to view actuator status and diagnostics in an easy to use, easy to read, graphical format. The built-in ambient light sensor coupled with smart software allows dynamic brightness and contrast regulation for improved visibility in all lighting conditions.

The industry's first multilingual actuator is now capable of configuration in English, Spanish, German, French, Italian, Portuguese, Mandarin, Russian, Bahasa Indonesia, Katakana and Turkish as standard configuration languages. In addition, the LCD can be rotated 180° for better field visibility.

Speed, precision, simplicity and fast set-up are characteristics expected of a smart actuator. Users and valve OEMs demand quick set-up and easy to understand dialog in preferred languages. The ability to either upload new software or download diagnostics is also critical to improving a plant's efficiency. The MXb actuator provides customers with the essential tools for rapid installation and root cause diagnostics.

Precision is expected in a smart actuator. The MX actuator was the first such device developed with an innovative absolute encoder that doesn't require troublesome and unpredictable battery back-up. Flowserve Limitorque's innovative absolute encoder has 18-bit resolution, allows for over 10,000 drive sleeve rotations, and is 100% repeatable. It has BIST (Built In Self Test) enhancements and redundancy.

When a device is designed for BIST, its methodology is such that much of the test functionality is embedded in the device itself. BIST design facilitates a critical component's ability to communicate its actual state for comparison to the expected state. Any deviation from expected values will be reported to the user, either locally at the actuator's LCD screen or over a network device.

Simplicity is expected in a smart actuator. In fact, one of the reasons for using an electric actuator is the simplicity of set-up, installation on a valve, and acquiring diagnostic information. The MXb actuator is the simplest and easiest to use electric actuator.

Long life and protection

Long life is expected in a smart actuator. There are more than 1,000,000 Limitorque actuators installed around the globe, in every conceivable environment. Many have been functioning for over 50 years. Introduced in 1997, the MX actuator is the Flowserve Limitorque smart actuator that inherits Limitorque's legendary longevity.

In order to last a long time in severe environments, smart actuators must have unparalleled protection. The MX actuator's IP68 enclosure rating is 15M for 96 hours, regardless of whether the unit is weatherproof or explosion-proof. Add other certifications to the list — NEMA 4, 4X, 6 — and the MX actuator is unsurpassed in unit protection.

The MX actuator is double-sealed, which isolates its terminal compartment from the controls environment. Any leakage into the terminal compartment is contained in the compartment.

Additionally, the design isolates critical components to ensure higher reliability by addressing electronics survivability, especially in extreme environments where the equipment is subject to electrical shock and interference.

The MX actuator is powder coated using a polyester resin in Blue Streak color, not only for aesthetics, but also for protection in severe corrosive environments.

Quality and certifications

Flowserve Limitorque is a global leader in quality manufacturing. All Limitorque plants are certified to ISO 9001 standards, the recognized benchmark for quality all over the world. The same unexcelled use of certified materials is found in the MX actuators as in Limitorque's naval and nuclear-qualified electric actuators. The MX actuator has used synthetic gear oils especially optimized for use with worm gear sets since the first unit was shipped in 1997. It was the first non-intrusive actuator to use rolled worms and electronic controls designed and produced using surface mount technology. A true globally certified device, the MXb actuator meets all pertinent European Directives, including IECEX, ATEX, EMC, Machinery and Noise, and displays the CE mark associated with such compliance.

Anatomy of MXb multi-turn actuators

Limitorque MX actuators respond to customer needs with advanced features designed for ease of commissioning and use, as well as time and money-saving operational benefits. What sets the MXb actuator apart is the combination of control and reliability enabled by advanced Limitorque technology, plus superior ergonomics and human interfaces for speed, comfort and ease of use.

The MXb actuator's **heavy-duty handwheel** provides backup for manual operation.

The reliable MXb actuator's motor includes **Class F insulation and three-phase ACV.** It is designed specifically for valve actuator service, with a high starting torque and low inertia to reduce valve position overshoot. Class H is an option for three-phase ACV motors.

Motor gear attachment allows the motor to be removed in one assembly for fast, easy inspection, repair and maintenance.

Double-sealed housing design provides a termination chamber that is separate and sealed from the control chamber. Control components are never exposed to the elements during site wiring or because of a faulty cable connection.

External connection block has three power terminals, a ground screw, and 54 control screw-type terminals to **simplify commissioning and upgrades.**

Long-life gear set consists of hardened alloy, steel-rolled worm and bronze worm gear immersed in an extended-life synthetic gear oil specifically developed for worm gear operation. It is completely bearing-supported.

Ductile iron thrust base is removable from main actuator housing for **easier valve installation and maintenance.** High-strength, bronze alloy stem nut is removable for machining to suit the valve stem.

Declutch lever enables the MXb actuator to be placed in manual, handwheel-drive operation. The lever automatically disengages when motor is energized and can be padlocked in the motor position.

Cast aluminum housing is powder-coated **for extreme environments.** Optional coatings are available.

Controls may be powered from an external 24 VDC source as backup for AC power, or it could be used with commissioning. Controls and display will remain active through loss of AC power.

Torque sensor derives output from motor speed, temperature and voltage—and shuts off the motor to protect the actuator and valve if the set torque is exceeded. This method of torque sensing indicates Limitorque's commitment to be fully electronic.

The absolute encoder, a key that enables MXb actuators to achieve 100% repeatable control, provides optical sensing of valve position with 16-bit resolution. The encoder measures valve position in both motor and handwheel operation. No battery or back-up power supply is required. It is redundant BIST, permitting up to a 50% fault tolerance, ensuring reliable performance in the unlikely event of component failure.

The MXb actuator offers **Bluetooth® LE technology,** which connects, receives and transmits up to 10 m (32.8 ft). Firmware can be downloaded to the actuator easily from a laptop computer.

The **high-resolution control panel display** delivers instant, up-to-the-minute actuator status and valve position in 11 languages. Both historical and real-time graphs can be viewed on the advanced display along with configuration and diagnostic information that includes motor, identification, hardware data, as well as torque profile log reports.

MXb actuators feature a **LimiGard circuit monitor** that is designed for Fail/No-Action protection. LimiGard consists of dedicated circuitry that continually monitors the motor contactor, control relays, internal logic circuits and external command signals to detect and alarm malfunctions. It now includes BIST for true predictive maintenance.

The control chamber includes an **electronic control, monitoring and protection module** mounted on a steel plate. Plug-in connectors allow fast, error-free removal and replacement of the module.

Local control switches make setup and calibration easy, using "yes" or "no" responses to straightforward questions, plus they provide the abilities to open, stop and close the actuator and select remote or local preferences. These switches are magnetically coupled, solid state Hall effect devices, which eliminate troublesome and fragile reed switches.

A **rotary knob,** unique to the Limitorque MXb design, facilitates seamless navigation and reduces setup and calibration times. The robust knob allows users the ability to quickly navigate between available menu options and helps in making faster and precision selections.

The *Bluetooth®* word mark and logos are registered trademarks owned by the Bluetooth SIG, Inc. and any use of such marks by Flowserve is under license. Other trademarks and trade names are those of their respective owners.

Control and diagnostics

Control is expected in a smart actuator. The MXb actuator is noted for simplifying valve control automation in three critical areas:

- Calibration/set-up
- Normal operation
- Diagnostics and troubleshooting

The MX actuator was the first non-intrusive actuator to equip users with LCD dialog screens in the language of their choice. The new and improved MXb actuator uses a graphical dot matrix display **that doubles the screen size** and offers eight times higher resolution and improves the visibility of the display. The use of this type of LCD permits the support of any language. In fact, in addition to English, Spanish, German, French, Italian and Portuguese, the MXb actuator now includes six languages — Mandarin, Russian, Bahasa, Indonesia, Katakana and Turkish — with a capacity for even more. The orientation of the text can be configured to rotate 180° and diagnostic graphs displayed for clearer data collection.

Simple "Yes" and "No" responses to dialog questions confirm the set-up of the MXb actuator via solid state Hall effect devices in all knobs. No special tools or remote devices are required. And the MXb actuator is "fit for service", offering the widest range of configuration menus of any non-intrusive, smart actuator.

The new intuitive and configurable menu structure caters to all knowledge and expertise levels by offering multiple configuration options. A quick-setup option ensures rapid and secure basic commissioning, while the advanced setup option allows the actuator to be tailored to the desired application.

Advanced setup

Main menu

Quick setup

Nothing exceeds Limitorque MXb actuators for ease and compatibility with valves of all types

Valves

Limitorque MXb actuators have been designed to accommodate today's wide variety of valve designs and meet international standards for valve and actuator interfaces, including ISO 5210 and MSS SP-102.

MXb actuators are available in a wide variety of configurations to accommodate various applications and valve designs:

Direct mounting: The MXb actuator can be directly coupled with valves for torque-only applications. For thrust applications, a separate thrust base is used.

MX/HBC/WG: The MXb actuator can be coupled to a WG or HBC worm gear reducer for operation of part-turn valves, such as butterflies, balls, plugs and dampers. This combination provides an output torque capacity of up to 184,280 N m (136,000 ft-lb).

MX/B320/MT/V and SR: Rising stem valves may be operated by an MXb actuator coupled to a variety of bevel gear and spur gear reducers. Thrusts up to 1,445 kN (325,000 lb) and torque up to 16,320 N m (12,000 ft-lb) can be accommodated.

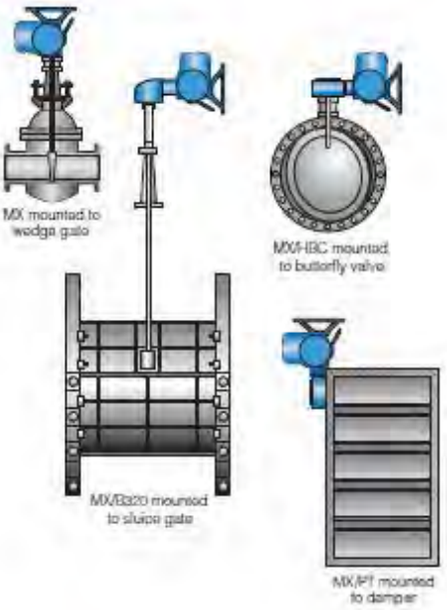

Couplings

Thrust actuator drive couplings:

- Type A1 – Alloy bronze (thrust)
- Type A1E – Extended bronze nut
- Linear base – Type LB1 (30 N [6,700 lb]) and LB2 (109 N [24,400 lb]) for control and choke valve applications (see LMENFL2360, MX and QXM Linear Base for further information).

Torque-only actuator drive couplings:

- Type B4 – Standard steel bushing
- Type B4E – Extended steel bushing
- Type B1 – Large fixed-bore keyway steel bushing (ISO 5210)
- Type BL – Splined steel bushing for rising rotating stem valves

Integrity and predictable performance

Smart actuators should have enabling technologies that ensure integrity and dependability. The MXb actuator offers three.

LimiGard – with BIST

Enhanced reliability for optimal plant operations and reduced troubleshooting costs are the primary benefits of Limitorque's unique smart actuator monitor, LimiGard.

When LimiGard wiring diagrams are followed, LimiGard continually monitors the control relays, internal logic circuits and external command signals, comparing them to reference conditions. This virtually eliminates the possibility that an actuator malfunction can occur without prompt detection and alarm communication. In the event of a malfunction, LimiGard takes over and supervises the actuator's response characteristics, maximizing safety and predictability. Fault Insertion Tests confirm this Fail/No-Action philosophy built into every MXb actuator.

A state-of-the-art electric actuator such as the MXb actuator should include means for verifying and validating that its components are designed with BIST capabilities. Selecting the MXb actuator, which incorporates a high level of BIST, can contribute greatly to the integrity and reliability of process applications and enhance the ability of a safety system to achieve its highest possible rating.

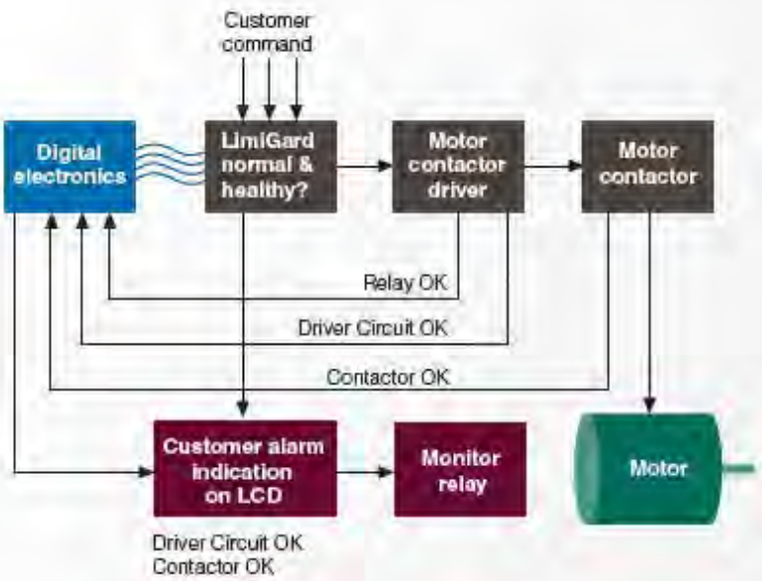

Absolute position encoder

Limitorque was the first electric actuator supplier to use an absolute encoder which doesn't require battery back-up for positioning. Customers specify absolute encoders for uninterrupted performance, and the MXb actuator meets customer expectations with an improved, 18-bit optical, 100% repeatable device. Position information is accurate with or without electrical power. The 18 bits also means that the span of the MXb actuator's encoder is now almost 10x the original – good for ~10,000 drive sleeve rotations. The encoder has redundant circuits, ensuring performance, even in the event of up to 50% component failure, continuing to provide reliable data while alerting the user to any faults.

Torque sensing

Torque limiting has been a Limitorque feature for more than 80 years. In fact, the name Limitorque was coined to identify the ability of an electric actuator to "limit torque" to a valve. In the past, electromechanical actuators have sensed torque using a complicated system of springs, switches and cams. The MXb actuator senses torque electronically for use in valve control, overload protection and torque trending. In conjunction with the LimiGard feature, torque is sensed from motor speed, with compensation performed for voltage and temperature variations. The result is highly reliable and predictable torque sensing without the need for the extra components associated with electromechanical torque switches. The MXb actuator is a true smart actuator.

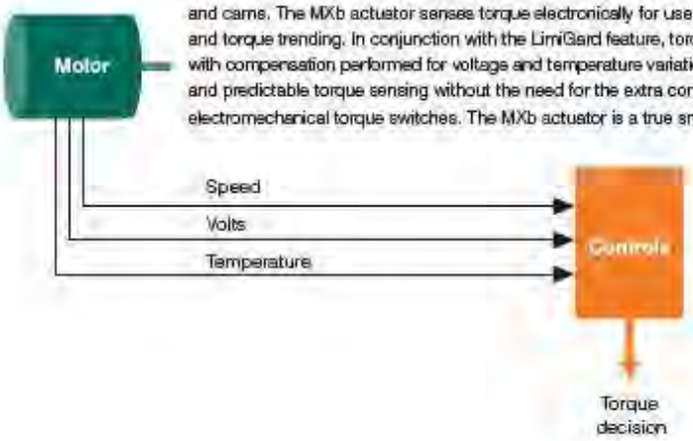

MXb control, indication, protection and optional features

Standard features

- **Direct-wired remote control** – Wiring flexibility includes the following standard alternatives to open-stop-close the actuator:
  - Four-wire – Valve can be opened, closed or stopped.
  - Two-wire switched – Single open or closed contact; valve can be opened or closed, but not stopped.
  - Three-wire maintained – Two maintained contacts for self-maintained control. Valve can be opened or closed but not stopped in mid-travel.
  - Three-wire inching – Two momentary contacts; valve can be opened, closed and stopped in mid-travel.
- **Multi-mode control** – Three modes of remote control are permitted when the MXb actuator is configured for multi-control: digital (discrete) control, analog control or network (fieldbus) control. The MXb actuator will respond to the last command received. However, analog (modutronic) control is initiated by either toggling MX User Input 2 (configured for CSE input) or removing and reapplying the 4-20 mA analog signal. Refer to AITB000090 for further information.
- **Monitor relay** – Provides an N/O and N/C contact, representing "Actuator available for remote operation."
- **Emergency shutdown (ESD)** – A remote, external ESD signal may be applied to the actuator to move the valve to a predetermined user-configured shutdown position, overriding existing control signals.
- **User-defined inputs** – Three user-defined inputs are supplied.
- **Inhibit signals** – External signals may be used to inhibit actuator opening, closing, or both.
- **Control signals** – The control signal can be either 24 VDC or optional 125 VAC; it can be sourced from the actuator or customer supply.
- **Status contacts (4)** – May be set to represent up to 30 actuator conditions.
- **UPS** – Allows for a 24 VDC UPS connection for either early commissioning prior to main power or actuator status and feedback in the event of lost mains power.
- **Negative switching** – When remote control systems require the negative pole of the circuit supply to be switched to positive earth, a simple software change is made.

Bluetooth LE capable

- Standard low-power wireless communication path to the actuator enables monitoring and configuration of the unit up to 10 m (32.8 ft) in any direction via a Bluetooth LE-compatible PC. FHSS (frequency-hopping spread spectrum) allows a reliable communication link, even in a "noisy" environment, and 128-bit data encryption can be enabled to protect the privacy of the link. A visible blue LED in the controls LCD window on the face of the actuator signifies an active Bluetooth link to the actuator has been established.

Protection features

- **Autophase protection and correction** – Assures proper open/close directions and monitors and corrects phasing if connected improperly. Prevents operation if a phase is lost.
- **Instantaneous reversal protection** – Incorporates the proper time delay between the motor reversals to reduce current surges and extend contactor life.
- **Motor thermal protection** – A thermistor, placed within the motor, protects against overheating.
- **LimiGard circuit protection** – LimiGard consists of dedicated circuitry that continually monitors the motor controller, control relays, internal logic circuits and external command signals. When the recommended wiring connections are made, it virtually eliminates unexpected, erroneous actuation caused by internal electronic failures and erratic external command signals. Additionally, in the event of malfunction, LimiGard supervises the actuator response, detects the source of the failure, and signals an alarm.

Optional features

- **Four additional latched contacts** – Additional contacts may be set to represent up to 30 key actuator conditions, for a total of eight contacts.
- **Two-speed timer** – A two-speed pulsing timer may be incorporated to support variable stroke times as configured by the user.
- **Analog position transmitter (APT)** – The APT is an internally powered, non-contacting valve position transmitter that provides a 4-20 mA signal proportional to valve position.
- **Analog torque transmitter (ATT)** – The ATT is a noncontacting, internally powered transmitter that provides a 4-20 mA signal that is proportional to actuator output torque.
- **Modutronic controller** – The Modutronic controller positions the valve in response to an external 4-20 mA command signal. It includes automatic pulsing mode to prevent overshoot at the setpoint. Parameters that may be set easily during configuration include proportional band, dead band, polarity, and action on loss of command signal.
- **Partial stroke and momentary closure ESD** – The partial stroke and momentary closure ESD signals are configurable by the user. It can also be supplied with a momentary closure contact-initiated ESD signal routine with redundant circuitry.
- **Control station (CSE)** – The CSE is a separate control station designed for the operation of inaccessible actuators. It is available with LEDs, Remote/Local and Open/Close selector switches. The CSE may be powered by the actuator's internal supply, provided wire resistance and other external loads do not limit the available signal power presented to the MXb actuator.
- **Solid-state motor reverser (SSMR)** – An SSMR is available when severe modulating operating conditions demand continuous operation.
- **Isolation and load break switches** – Isolation and load break switches can be supplied for the incoming three-phase supply to the actuator. These may be coupled directly to the actuator for weather-proof (WP) applications only or supplied separately for mounting by the user. The enclosure is suitable for WP or temporary submersion service. An explosion-proof (XP) isolation switch is also available for user mounting and is suitable for mounting with all MXb actuators. Please contact factory for availability.

Network communications

The MXb actuator provides a comprehensive network option portfolio to the user. Network solutions are improved with the addition of HART and TCP/IP to complement Modbus, Foundation Fieldbus H1, DeviceNet, Profibus DP_V1 and Profibus PA. The MXb actuator provides the user with predictable, reliable and safe operation for years to come, in applications which are subject to the most rigorous requirements and environmental extremes.

DDC Modbus (distributed digital control) communication

DDC is Flowserve Limitorque's digital communication control system that provides the ability to control and monitor up to 250 actuators over a single twisted-pair cable. The communication network employs Modbus protocol on an RS-485 network and is redundant. Redundancy assures that any single break or short in the communication cable will not disable any actuators. Each actuator has included an addressable field unit that communicates over the twisted-pair network and executes open, close, stop, ESD and GO TO position commands. The field unit also transmits all actuator status and alarm diagnostic messages over the same communication network.

DDC network

- Single-ended loop (consult factory)
- Modbus protocol
- High-speed – up to 19,2 k baud

Master Station IV

MXb actuator units equipped with DDC can be controlled via Flowserve Limitorque's Master Station IV. It includes:

- Network control (up to 250 devices)
- Host interface – Industry standard Modbus Rtu, ASCI, UDP, and TCP/IP protocols and control
- 165.1 mm (6.5 in) TFT touch-screen display for network configuration status
- Configurable polling sequence priority
- Network time protocol for time synchronization of alarms diagnostics data to host device
- Modular hot-swappable redundant design; modules can operate independently or be externally coupled to form redundant communications
- Email notifications of alarm conditions
- Data/event logging

Foundation Fieldbus communication with device type manager (DTM) technology

The MXb actuator can be fitted with Foundation Fieldbus protocol that complies with the IEC 61158-2 Fieldbus H1 standard. The field unit device is able to support several topologies such as point-to-point, bus with spurs, daisy chain, tree, or a combination of these. The FF device has network features that include:

- Link Active Scheduler (LAS) that controls the system
- High-speed communications up to 31.25 kbits/sec
- Publisher-subscriber communication
- Input and output function blocks
- Device descriptions
- Network communication
- Configurable by user

Link Active Scheduler communication: Fieldbus segments have one active LAS at a given time, which is the bus arbiter, and does the following:

- Recognizes and adds new devices to the link
- Removes non-responsive devices from the link
- Schedules control activity in, and communication activity between, devices
- Regularly polls devices for process data
- Distributes a priority-driven token to devices for unscheduled transmissions
- DTM technology includes PID (proportional integral derivative) and partial stroke (PS) features

PROFIBUS DP V1 communication with DTM

The MXb actuator can be fitted with Profibus DP_V1 protocol field units that comply with EN50170 Fieldbus Standard for RS-485 communications. The device supports several topologies such as point-to-point, bus with spurs, daisy chain, tree, or a combination of these. The PB device has network features that include:

- High-speed communications up to 1.5 Mbps
- Master-to-slave communication
- Standby communication channel
- Analog and digital input and output function blocks
- Device descriptions configurable by the user
- High-Speed Data Exchange – Startup Sequence
- Power On / Reset – Power On / Reset of master or slave
- Parametarization – download of parameters into field device (selected during configuration by the user)
- I/O configuration – download of I/O configuration into the field device (selected during configuration by the user)
- Data exchange – cyclic data exchange (I/O Data) and field device reports diagnostics
- Redundant Profibus DP with single or multiple – master communications

PROFIBUS PA communication with DTM

A Profibus PA protocol is available and complies with EN50170 Fieldbus Standard and Fieldbus physical layer per IEC 61158-2 for communications. The device supports several topologies such as point-to-point, bus with spurs, daisy chain, tree, or a combination of these. The PB device has network features that include:

- High-speed communications up to 31.25 kbits/s with Manchester coding
- Master-to-slave communication
- Bus powered for 9 to 32 VDC and 15 mA per actuator
- Standby communication channel
- Analog and digital input and output function blocks
- Device descriptions
- Configurable by user

The Profibus DP-V1/PA DTM V 1.0 is a software component that contains device-specific application information. The DTM can be integrated into engineering and FDT frame applications, such as stand-alone commissioning tools or asset management systems that are equipped with FDT interfaces. FDT technology is independent from any specific communication protocol, device software or host system, allowing any device to be accessed from any DCS host through any protocol.

DeviceNet

DeviceNet complies with CAN-based protocol and provides the following features:

- DeviceNet Group 2 Server implementation
- Master-to-slave communication
- Bus-powered network interface allows power alarm information to be communicated when actuator loses main power; the actuator does NOT drop off the network when power is lost
- Standard polled I/O connection
- Standard bit strobed I/O connection
- Standard change of state / cyclic I/O connection
- Standard explicit connections defined as:
  - Various assembly objects and sizes that allow the network user to determine how much data to transfer to accommodate network installation data throughput requirements
  - Automatic baud rate detection
  - Node address configurable via local setup menu or via the remote network user
  - Broadcast or group network originated ESD support

HART Communication with DTM

- Complies with HART Communication Protocol Specification (Document HCF_SPEC-13) for Revision 7.3
- Digital signal on conventional 4-20m ADC analog signal
- 1,200 bps binary phase – continuous Frequency-Shift-Keying
- Master-Slave communication method
- Point-to-point or multi-drop network topology
- Distances up to 1800 meters/network (up to 15 devices)
- EDDL (IEC 61804-2, EDDL) with methods for all supported common practice and device-specific commands

MXb series performance ratings for units 05 through 150

MX-05 through MX-40 (three-phase: 50 Hz/380, 400, 415 and 440 Volt: 60 Hz/208, 230, 380, 460, 480, 525, 575 Volt)
MX-85 through MX-150 (three-phase: 50 Hz/380*, 400 and 415 Volt: 60 Hz/380, 460, 575 Volt)

*380/50 multiply by 0.9

Output Speed (RPM)		MX-05		MX-10		MX-20		MX-40		MX-85		MX-140		MX-150	
		Rated Output Torque													
60 Hz	50 Hz	ft-lb	N m	ft-lb	N m	ft-lb	N m	ft-lb	N m	ft-lb	N m	ft-lb	N m	ft-lb	N m
18	15	55	75	125	170	225	305	440	597	n/a	n/a	n/a	n/a	n/a	n/a
28	22	55	75	125	170	225	305	440	597	850	1,153	1,500	2,036	n/a	n/a
40	33	55	75	125	170	225	305	440	597	1,225	1,662	1,700	2,307	n/a	n/a
52	43	55	75	125	170	225	305	440	597	1,150	1,561	1,800	2,171	n/a	n/a
77	65	48	65	107	145	178	241	345	468	850	1,153	1,200	1,628	n/a	n/a
100 131[1]	84 110[1]	39	53	89	121	148	201	286	388	600	814	815	1,105	1,500	2,036
155 170[1]	127 143[1]	41	56	89	121	140	190	260	353	450	611	650	882	1,150	1,561
200	165	34	46	73	99	114	155	210	285	n/a	n/a	n/a	n/a	n/a	n/a

Note 1: MX-85, MX-140 and MX-150

Type A Couplings	lb	kN	lb	kN	lb	kN	lb	kN	lb	kN	lb	kN	lb	kN
Thrust ratings (lb/kN)	8,000	35	15,000	66	25,000	111	36,000	160	50,000	222	75,000	333	75,000	333
B4 Base (Torque Only)	**lb**	**kg**	**lb**	**kg**	**lb**	**kg**	**lb**	**kg**	**lb**	**kg**	**lb**	**kg**	**lb**	**kg**
Weights (lb/kg)	52	24	65	29	109	49	133	60	250	114	300	136	431	182

A1 Base (Thrust Only) Weight	lb	kg
MX-05 & MX-10	9	4
MX-20 & MX-40	29	13
MX-85 w/ F16/FA16 base	72	33
MX-140 & MX-150 w/ F25/FA25 base	111	50

Linear Base Weight	lb	kg
LB1	24	11
LB2	65	29.5

Maximum stem capacity

Type A Couplings	in	mm	in	mm	in	mm	in	mm	in	mm	in	mm	in	mm
Type A1	1.26	32	1.57	40	2.36	60	2.64	67	3.50	88	3.50	88	3.50	88
Type A1E (extended nut)	1.26	32	1.57	40	2.36	60	2.64	67	3.50	88	3.50	88	3.50	88
Type B Couplings (Torque Only)[2]	**in**	**mm**	**in**	**mm**	**in**	**mm**	**in**	**mm**	**in**	**mm**	**in**	**mm**	**in**	**mm**
Type B4	1	25.4	1.25	30	1.94	50	2.2	55	2.88	73	2.88	73	2.625	65
Type B4E (extended)	0.75	19	0.91	22	1.56	41	1.78	46	2.25	57	2.25	57	2.625	65
Type B1 (fixed bore)[2]	n/a	42	n/a	42	n/a	60	n/a	60	n/a	n/a	n/a	n/a	n/a	n/a
Type BL (splined)	6 & 38 Splines		6 & 38 Splines		6 & 36 Splines		6 Splines		n/a	n/a	n/a	n/a	n/a	n/a
Maximum Bore and Keyway	**in**	**mm**	**in**	**mm**	**in**	**mm**	**in**	**mm**	**in**	**mm**	**in**	**mm**	**in**	**mm**
Maximum bore (B4)	1	25.4	1.25	30	1.94	50	2.2	55	2.88	73	2.88	73	2.625	65
Maximum key dimensions	¼ sq.	8 x 7	¼ sq.	10 x 8	½ x 3/8	14 x 9	½ x 3/8	16 x 10	5/8 x 7/16	18 x 11	5/8 x 7/16	18 x 11	5/8 x 7/16	18 x 11
Maximum bore (B4E)	.75	18	0.91	22	1.56	41	1.78	46	2.25	56	2.25	56	2.50	65
Maximum key dimensions	3/16 sq.	6 x 6	¼ sq.	8 x 7	3/8 sq.	12 x 8	½ x 3/8	14 x 9	½ x 3/8	16 x 10	½ x 3/8	16 x 10	0.625 sq.	18 x 11

Note 2: Maximum bore for Type B couplings may require rectangular keys.

	MX-05	MX-10	MX-20	MX-40	MX-85	MX-140	MX-150
Mounting base (MSS SP-102/ISO 5210)	FA10/F10	FA10/F10	FA14/F14	FA14/F14	FA16/F16	FA25/F25	FA25/F25
Handwheel ratio (STD/Optional)	Direct	Direct/6:1	Direct/12:1	Direct/24:1	16/48	16/48	16/48
Side-mounted handwheel efficiencies	n/a	52%	54%	51%	53%/51%[4]	53%/51%[4]	53%/51%[4]

MXb actuator standard and optional features

Limitorque MXb electric valve actuators are designed for the operation of ON-OFF and modulating valves. They include a three-phase electric motor, worm gear reduction, absolute encoder, electronic torque sensor, reversing motor contactor, electronic control, protection and monitoring package, handwheel for manual operation, valve interface bushing, 240x160 pixel resolution LCD and local control switches — all contained in an enclosure sealed to NEMA 4, 4X, 6 and IP68. XP enclosures can also be provided when required. All MXb actuators comply with applicable European Directives and exhibit the CE mark.

Power transmission and lubrication

All mechanical gearing components are bearing supported, and final drive (output) consists of a hardened alloy steel worm and alloy worm gear. All gears are immersed in an oil bath lubricated with a synthetic oil designed specifically for extreme pressure worm and worm gear transmission service. Special lubricants are available for operation in temperatures of less than -30°C (-22°F). Consult factory.

Lubrication and temperature range	Synthetic brand
Standard lubrication: -30°C to 70°C (-22°C to 158°F)	Mobile SHC 323
Optional food-grade lubrication: -30°C to 70°C (-22°C to 158°F)	Dow Molykote

Motor, three-phase ACV

The MXb actuator's motor is a three-phase squirrel cage designed for electric valve actuators. It is specifically designed for the MXb actuator and complies with IEC 34, S2-33% duty cycle at 33% of rated torque. The motor is a true bolt-on design with a quick-disconnect plug that can be changed rapidly without sacrificing motor leads. It is equipped with a solid-state motor thermistor to prevent damage due to temperature overloads.

On-off modulating
• Standard insulation class is F to IEC 34; S4_50% for stated operating times is 100 to 600 starts per hour. • SSMR: 600 to 1,200 starts per hour; IEC 34, S4_50% is 1,200 starts per hour.

The MXb actuator's motor permits a global range of three-phase voltages to be connected without modification. The motor can energize, provided either of the listed voltages are connected:

Phase/frequency	Application Voltage
Three-phase: 60 Hz	208, 220, 230, 240, 380, 440, 460, 480, 550, 575
Three-phase: 50 Hz	380, 400, 415, 440, 525

Electronic control modules

Non-intrusive

The MXb actuator is non-intrusive, which means that all calibration/configuration is possible without removing any covers and without the use of any special tools. All calibration is performed in clear text languages; no icons are used. All configuration is performed by answering the "YES" and "NO" questions displayed on the LCD. "YES" is signaled by using the OPEN switch and "NO" by using the CLOSE switch, as indicated adjacent to the switches.

Double-sealed terminal compartment and terminal block

All customer connections are located in a terminal chamber that is separately sealed from all other actuator components. Site wiring doesn't expose actuator components to the environment. The internal sealing within the terminal chamber is suitable for NEMA 4, 6 and IP68 to 15M for 96 hours. The terminal block includes screw-type terminals: three for power and 54 for control. Customer connections are made via conduits located in the terminal housing.

Three standard conduit openings (NPT threads standard; M optional)
(2) – 1.25 in NPT or M32 (optional) (1) – 1.5 in NPT (standard) or M38 (optional) (1) – 1.0 in NPT (optional) or M25 (optional)

Controls

The controls are all solid state and include power and logic circuit boards and a motor controller that performs as the motor reverser, all mounted to a steel plate and attached in the control compartment with captive screws. All internal wiring is flame resistant, rated 105°C (221°F), and UL/CSA listed.

The controls are housed in the ACP (actuator control panel) cover, and the logic module uses solid-state Hall effect, devices for local communication and configuration. A 240x160 resolution, graphical LCD is included to display valve position as a percent of open, 0 to 100% and current actuator status. Red and green LEDs are included to signal 'Opened' and 'Closed,' and are reversible, and a yellow LED to indicate 'Valve Moving.' A blue LED is included to indicate when the Bluetooth feature is recognized by an external Bluetooth LE-enabled device and a white LED to indicate 'Overtorque Fault' or 'Torque Seated'. A padlockable LOCAL-STOP-REMOTE switch and an OPEN-CLOSE switch are included for local valve actuator control.

Using the knobs and LCD screen, the MXb actuator is configurable in 11 languages: English, Spanish, French, German, Portuguese, Italian, Mandarin, Russian, Bahasa Indonesia, Turkish and Katakana. A rotary knob provides ease of menu maneuvering.

S contacts for remote indication

As standard, four latching status contacts rated 250 VAC, 5A and 30 VDC, 5A are provided for remote indication of valve position, configured as 1-N/O and 1N/C for both the open and closed positions. The contacts may be configured in any of the selections depicted in the "Actuator Status Message" column.

"S" Contact AC	"S" Contact DC
5 Amps @ 250 VAC	5A @ 30 VDC

Actuator Status Message	Function
"Closed"	Valve closed "(0% OPEN)"
"Opened"	Valve open "(100% OPEN)"
"Closing"	Valve closing
"Opening"	Valve opening
"Stopped"	Valve stopped in mid-travel
"Valve Moving"	Either direction
"Local Selected"	Red selector knob in "LOCAL"
"Motor Overtemp"	Thermistor range exceeded
"Overtorque"	Torque exceeded in mid-travel
"Manual Override"	Actuator moved by handwheel
"Valve Jammed"	Valve can't move
"Close Torque SW"	Torque switch trip at "CLOSED"
"Open Torque SW"	Torque switch trip at "OPEN"
"Local Stop/Off"	Red selector knob at "STOP"
"Lost Phase"	One or more of the incoming supply lost
"ESD Signal"	Signal active
"Close Inhibit"	Close inhibit signal active
"Open Inhibit"	Open inhibit signal active
"Analog IP Lost"	4–20 mA not present
"Remote Selected"	Red selector in "REMOTE"
"Hardware Failure"	Indication
"Network Controlled"	Permits relay control via DDC, FF, or other network driver
"Function"	LimiGuard circuit protection activated
"Mid-Travel"	Valve position, 1 to 99% open
"CSE Control"	CSE station in LOCAL or STOP and controls actuator
"PS Active"	Partial stroke test in operation
"PS Passed"	PS test complete and successful
"PS Failed Target"	PS test did not achieve target value
"PS Failed Returns"	PS test did not return to start position
"PS"	Partial stroke, active if "PS" configured
"Run Load Alarm"	Single phase only
"DPTS Open"	Open torque switch trip (open torque seat or open overtorque)
"DPTS Close"	Close torque switch trip (close torque seat or close overtorque)

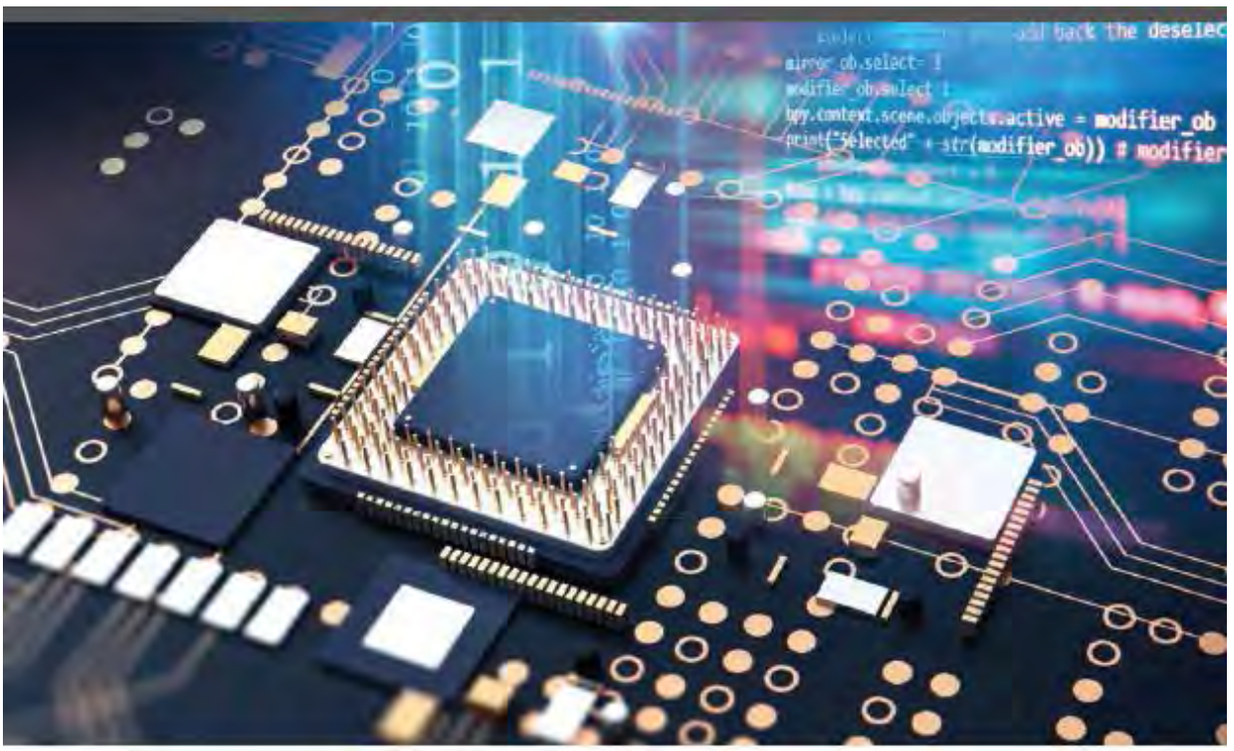

Monitor relay for remote indication

A monitor relay is included as standard and trips when the actuator is not available for remote operation. Both N/O and N/C contacts are included, rated 250 VAC, 5 A and 30 VDC, 5 A. The monitor relay is hard set for lost phase, valve jammed and motor overtemp, but can be aditionally configured for local knob movement, overtorque, inhibits active or ESD active. The yellow LED will blink when the monitor relay is active. The user can disable the monitor relay, if necessary.

Monitor Relay AC	Monitor Relay DC
5 Amps @ 250 VAC	5A @ 30 VDC

Remote control

Discrete remote control (user supplied) may be configured as two, three or four wires for Open-Stop-Close control. Remote control functions may be powered by external 24 VDC, 110 VAC, or the actuator's internal 24 VDC supply or optional 110 VAC supply. The internal supplies are protected against over-current and short circuit faults and utilize optical isolation to minimize electromagnetic interference. Discrete control provides isolated commons for up to three selections.

Signal Threshold for Voltage Values	Maximum Load
5.0 VAC/VDC maximum 'OFF'	24 VDC + 2 mA
19.2 VAC/VDC minimum 'ON'	110 VAC + 10 mA

Speed control

The MXb actuator permits operational speeds in either Open and Closed directions to be set independently of each. It also has an industry-leading span for the optional two-speed timer.

Two-Speed Timer Span "On" Pulse	Two-Speed Timer Span "Off" Pulse
0.5 to 20 seconds (0.5 sec. increments)	1.0 to 200 seconds (1.0 sec. increments)

Software

LimiGard

A dedicated circuit to prevent undesired valve operation in the event of an internal circuit fault or erratic command signal is included as standard on each Limitorque electric actuator. A single point failure will not result in erratic actuator movement nor will an open or short circuit in the internal circuit board logic energize the motor controller. The command inputs are optically coupled and require a valid signal pulse width from at least 250 to 350 ms to either turn on or off. In the event of an internal circuit fault, an alarm is signaled by tripping the monitor relay and through LCD indication. The control module also includes an auto reversal delay to inhibit high-current surges caused by rapid motor reversals.

Phase detection and correction (three-phase)

A phase correction circuit is included to correct motor rotation faults caused by incorrect site wiring or phase switching in the event of a power down. The phase correction circuit also detects the loss of a phase and disables operation to prevent motor damage. The monitor relay will trip and an error message is displayed on the LCD screen when loss of phase occurs.

Multi-mode remote control

The MXb actuator is capable of being configured for multi-mode remote control, which permits discrete wiring for either two, three or four wires, or network (Fieldbuses) for Open-Stop-Close control and responds to the last signal received. The actuator can also distinguish analog control for modulating applications. The QX and MX products from Limitorque are the only smart actuators with such features.

ESD

An emergency shutdown (ESD) provision is included in each actuator, and the MXb actuator has up to three configurable inputs for ESD. The ESD signal(s) can be selected to override any existing signal and send the valve to its configured emergency position. Provision for an isolated common is standard.

Inhibits

The MXb actuator has as standard provisions for inhibit movement and also contains up to three configurable inputs. Provision for an isolated common is also standard.

Advanced diagnostics

The MXb actuator incorporates advanced diagnostics that provide greater process visibility and control. It features an enhanced, **NAMUR NE107-compliant**, diagnostic notification system that provides higher process control by alerting the operator of alarm and event conditions through an internationally accepted symbol standard.

The MXb actuator tracks the actuator's environment and performance through a sophisticated set of sensors and **monitors for any deviations** that might be outside of specified tolerances. Voltage, operation, torque and vibration, to name a few, are some of the diagnostics tracked to give the user a more active approach to maintaining their equipment before failures or damage occur.

The MXb actuator provides **time-stamped data logging** capability to track local and remote move commands as well as events and alarms. The data logger event and alarm list is configurable and can store thousands of historical actions time-stamped by an RTC. The RTC is backed up by a battery with an operating life of 10+ years.

The MXb actuator also has a high-resolution graphical display that allows for local display of the actuator's diagnostics. The MXb actuator can display profiling of all sensor data with relation to position. It can display live and historical torque profiles with the ability to inspect the profile for exact torque and position values.

Valve and actuator position sensing

Valve position is sensed by an 18-bit, optical, absolute position encoder with redundant position-sensing circuits designed for BIST. Each of the position-sensing circuits is redundant, facilitating BIST. The BIST feature discerns which failures will signal a warning only and which require a warning plus safe shutdown of the actuator. Open and closed positions are stored in permanent, non-volatile memory. The encoder measures valve position at all times, including both motor and handwheel operation, with or without power present, and without the use of a battery. The absolute encoder is capable of resolving ±7° of output shaft position over 10,000 output drive rotations.. This design permits continuous monitoring of valve position during motor and handwheel operation. The encoder is 100% repeatable and requires no backup power source for operation. The output is used to control the open and closed valve positions and measure and report valve position, as well as provide local and remote position feedback. The positioning accuracy is better than 99% for valves requiring 50 or more turns.

- Maximum actuator turns = 10,000
- Resolution = ± 7 degrees

Valve and actuator torque sensing

The MXb and QX are the only electric actuators that sense torque electronically. A microprocessor calculates output torque from motor speed, voltage and temperature. Torque limit may be set from 40 to 100% of rating in 1% increments. A "Jammed Valve Protection" feature is included to de-energize the motor if the output torque requirement exceeds the boost torque. A boost function is included to prevent torque trip during initial valve unseating and extreme arctic temperature operation (from 0°C down to -60°C [32°F down to -76°F]).

Exterior corrosion protection

As standard, the MXb actuator is coated with a polymer powder coat suitable for exposure to an ASTM B117 salt spray test of 2,000 hours. External fasteners are 300 series stainless steel. Optional coatings are available by contacting the factory.

Manual operation

A handwheel and declutch lever are provided for manual operation. The handwheel is metal, and changing from motor to manual operation is accomplished by engaging the declutch lever. Energizing the motor returns the MXb actuator to motor operation. The lever is padlockable in either motor or manual operation. Optional configurations for handwheels are available by consulting the factory.

Factory testing

Every MXb actuator is factory-tested to verify rated output torque, output speed, handwheel operation, local control, control power supply, valve jammed function, all customer inputs and outputs, motor current, motor thermistor, LCD and LED operations, direction of rotation, microprocessor checks and position-sensor checks. A report confirming successful completion of testing is included with the actuator. Special testing can also be performed by contacting the factory.

Design life and endurance testing

- Design life – One million drive sleeve turns is considered typical life expectancy under normal operating conditions and approved ambient working environments.
- Endurance – 50 million collective drive sleeve turns of endurance testing were performed on the MXb actuator for proof of design.
- AWWA C540-02 – "Standard for Power Actuating Devices for Valves and Sluice Gates" – 10,000 cycles with confirmation of specified torque and position accuracy

Optional features

Analog position transmitter

A non-contacting, internally powered, electrically isolated position transmitter can be included to provide a 4-20 mA or 0 to 10 VDC signal that is proportional to valve position.

Analog torque transmitter

A non-contacting, internally powered, electrically isolated torque transmitter can be included to provide a 4-20 mA or 0 to 10 VDC signal that is proportional to rated output torque.

Voltages or Currents for APT/ATT	Maximum/Minimum External Load—APT/ATT
4-20 mA	470 ohms—99.9% accuracy 750 ohms for 99% accuracy
0 to 10 VDC	1,000 ohms minimum—99.9% accuracy 2,700 ohms minimum—99% accuracy

Modutronic option

A controller that alters valve position in proportion to a 4-20 mA analog command signal can be ordered. Positioning is accomplished by comparing the command signal to a noncontacting internal position feedback. An automatic pulsing feature to prevent overshoot at the setpoint is included. Proportional bands, deadband, signal polarity, motion inhibits time and fail are adjustable using the Local control mode of configuration. Deadband is adjustable to +/- 0.5% full span.

Voltages or Currents for Modulation	Input Impedance/ Capacitance
4-20 mA	470 ohms—99.9% accuracy 750 ohms for 99% accuracy
0 to 10 VDC	1,000 ohms minimum—99.9% accuracy 2,700 ohms minimum—99% accuracy

Relays for status and alarms

Up to four additional latching output contacts rated 250 VAC/ 30 VDC, 5 A and configurable to represent any actuator status in either N/O or N/C state are available. Please refer to "Status and Alarm Contacts for Remote Indication" for list of settings.

"R" Contact and AC Ratings	"R" Contact and DC Ratings
5.0 Amps @ 250 VAC	5A @ 30 VDC (resistive)

Global certifications

Non-hazardous (weatherproof / submersion) certifications IEC 529 protection code IP68; 15 meters for 96 hours USA; NEMA 3, 4, NEMA 4X, NEMA 6

Geographic Locations	Weatherproof/Submersion	Standard Temperature
IEC 529 Protection Code IP68	15M for 96 hours	-30°C to 65°C (-22°F to 149°F)
USA & Canada, NEMA 3, 4, 6	20 ft for 24 hours	-30°C to 70°C (-22°F to 156°F)
USA & Canada, NEMA 4X	1,500 hrs. to ASTM B117	-30°C to 70°C (-22°F to 156°F)

Standard hazardous global certifications

- FM – Class I, Groups B, C & D, Div. 1 & Class II, Groups E, F & G, T4
- ATEX EExd IIB T4 ATEX II 2 G, CENELEC Norm EN 60079-0:2006 and EN 60079-1:2004
- ATEX EExd IIC T4 ATEX II 2 G, CENELEC Norm EN60079-1:2004
- EEx de IIB T4 ATEX II G, Increased Safety, CENELEC Norm EN 60079-7:2003
- ATEX EEx de II C T4
- IECEx d IIC, T4, Gb, X from -20°C to 60°C (-4°F to 140°F)
- IECEx de IIB/IIC, T4, Gb, X from -20°C to 60°C (-4°F to 140°F)
- IECEx d IIB (or IIC) T4 -20°C (-4°F) ≤ TAMB ≤ +60°C; IP68 - Size 05, 10, 20, 40, 85, 140 or 150
- IECEx d e IIB (or IIC) T4 -20°C (-4°F) ≤ TAMB ≤ +60°C; IP68 - Size 05, 10, 20, 40, 85, 140 or 150. Group IIC design also available and requires special construction. Contact factory Inmetro - same as IECEx, except that -60°C (-76°F) is N/A.

Geographic Locations	Explosion-proof Classifications	Standard Temperature
USA to Factory Mutual (FM)	Class I, Groups B, C, & D, Div. 1, T4 and Class II, Groups E, F, & G, Div. 2, T4	-30°C to 65°C (-22°F to 149°F)
ATEX II 2 G, CENELEC Norm EN 50014 & 50018	Eex d IIB T4, Eex d IIC T4, and Eex de IIB T4, Eex de IIC T4	-30°C to 65°C (-22°F to 149°F)
IECEx	Ex d IIB T4; IP68 & Ex d IIB (or IIC) T4; IP68 & Ex d e IIB (or IIC) T4	-20°C to 60°(-4°F to 140°F)

Note: Options are available to -60°C (-74°F) for TR-CU (Russia). Consult factory for availability. *Consult factory for limitations.

European directives

All MXb actuator designs have been tested to comply with pertinent EU Directives and shipped with the Declaration of Conformity listed in the Regulatory Section of VAIOM000071. The actuator is also tagged with the CE mark to demonstrate compatibility with the following European Directives:

All MXb actuator designs have been tested to demonstrate compatibility with the following European directives and are marked with the CE label:

- 2006/42/EC – Machinery Directive
- Vibration and seismic capability is in accordance with MILSTD-167, IEEE-344-1975 and IEC68-2-6. Test performed in each of three (3) axes, H1, horizontal – parallel to motor, H2, horizontal – perpendicular to motor, and "V1," vertical

Vibration Levels (MX actuator functions after event)	Seismic Levels (MX actuator functions after event)
5 to 100 Hz sine sweeps, 0.75g 3 axes	2 Hz 2g, 2.5 to 35 Hz 3g, sine dwell, 3 axes
5 to 500 Hz sine sweeps, 1.0g 3 axes	1 Hz 0.5g, 2 to 50 Hz 1g, sine sweeps, 3 axes
25 Hz 2g, 40 to 200 Hz 3g, sine dwells, 3 axes	

- 2006/42/EC – Airborne Noise to EN 60204-1. The MXb actuator has been tested for noise emissions and at 1 m (3.3 ft) distance is less than 74 dB per grade A noise requirement of MIL-STD-740 and ANSI/ISA-S82.01-1994 (harmonized std. to IEC 1010-1).
- 2014/30/EU -EMC – Electromagnetic Compatibility and 2014/35/EU Low Voltage; EN 50081-1 & 2 – Three-phase ACV actuator actuator complies with all pertinent requirements of Class A service categories in the listed table.

Three-phase ACV actuators comply with all pertinent requirements of Class A service categorizes in the listed table:

Applicable Emissions Standards	EN61326-1 (CISPR11)	Industrial Environments - Class A - Test Limits & Levels	
Radiated Emissions	EN55011:2009+A1:2010 (CISPR11)	30 MHz to 230 MHz 230 MHz to 1 GHz	40 dB (µV/m) 47 dB (µV/m)
	FCC Part 15, (CFR47 Part 15.109)	30 MHz to 88 MHz 88 MHz to 216 MHz 216 MHz to 960 MHz > 960 MHz	90 dB (µV/m) 150 dB (µV/m) 210 dB (µV/m) 300 dB (µV/m)
Conducted Emissions	EN55011:2009+A1:2010 (CISPR11)	150 kHz to 500 kHz 500 kHz to 30 MHz	79 dB (µV) (quasi-pk), 66 dB (µV) (avg) 73 dB (µV) (quasi-pk), 60 dB (µV) (avg)
	FCC Part 15, (CFR47 Part 15.107)		
Applicable Immunity Standards		**Industrial Environments - Test Limits & Levels**	
ESD	IEC61000-4-2 (B)	Air: AC, DC, Signal	±2 kV, ±4 kV, ±8 kV
		Contact: AC, DC, Signal	±1 kV, ±2 kV, ±4 kV
Radiated RF Immunity	IEC61000-4-3 (A)	Enclosure @ 80 MHz to 1 GHz	10 Vrms/m @ 80% AM, 1 kHz
		Enclosure @ 1 GHz to 2.7 GHz	3 Vrms/m @ 80% AM, 1 kHz
Fast Transients/Burst	IEC61000-4-4 (B)	AC, Signal	±2 kV, ±1 kV
Voltage Surges	IEC61000-4-5 (B)	Common: AC, Signal Differential: AC, Signal	±2 kV, ±1 kV ±1 kV, ±1 kV
Conducted RF Immunity	IEC61000-4-6 (A)	AC @ 150 kHz to 80 MHz	10 Vrms @ 80% AM, 1 kHz
Magnetic Field Immunity	IEC61000-4-8 (A)	Three mounting axis	30 A/m
Voltage Dips and Interrupts	IEC61000-4-11 (B)	3 dips, 10 sec apart	> 95% dip for 1 cycle @ 50/60 Hz 30% dip for 500 ms @ 50/60 Hz 60% dip for 200 ms @ 50/60 Hz
	IEC61000-4-11 (C)	3 dips, 10 sec apart	> 95% interrupt for 5 sec @ 50/60 Hz

Conduit entries

Three threaded conduit entries are provided tapped: 1 x 1½ in and 2 x 1¾ in NPT. Unless otherwise specified, actuator will be dispatched with adapters: 1 x M40 and 2 x M32 metric to BS3643; PG adapters are available upon request. An optional, fourth conduit, tapped to 1.0 in NPT or 25 mm, is available.

- Di-electric – Motor per NEMA MG1-12.02 and 0.03 with leakage of less than 10 mA. Control terminals per IEC-1131-2 with check against physical breakdown.

Click here to return to Waterpilot (PS)

XII. Exhibit Q

Technical Information
Waterpilot FMX21

Hydrostatic level measurement
Compact device for level measurement in fresh water, wastewater and saltwater, communication via HART

Reliable and robust level probe with ceramic measuring cell

Application

The Waterpilot FMX21 is a pressure sensor for hydrostatic level measurement. Endress+Hauser offers three different versions of the FMX21 sensor:

- FMX21 with a stainless steel housing, outer diameter of 22 mm (0.87 in): Standard version suitable for drinking water applications and for use in bore holes and wells with small diameters.
- FMX21 with a stainless steel housing, outer diameter of 42 mm (1.65 in): Heavy duty version, easy clean flush-mounted process diaphragm. Ideally suited for wastewater and sewage treatment plants.
- FMX21 with a plastic insulation, outer diameter of 29 mm (1.14 in): Corrosion resistant version generally for use in saltwater, particularly for ship ballast water tanks.

Your benefits

- High resistance to overload and aggressive media
- High-precision, robust ceramic measuring cell with long-term stability
- Climate proofed sensor thanks to completely potted electronics and 2-filter pressure compensation system
- 4 to 20 mA with superimposed HART 6.0 output signal
- Simultaneous measurement of level and temperature with optionally integrated Pt100 temperature sensor
- Accuracy
  - Reference accuracy ±0.2 %
  - PLATINUM version ±0.1 %
- Automatic density compensation to increase accuracy
- Usage in drinking water: KTW, NSF, ACS
- Approvals: ATEX, FM, CSA
- Marine certificate: GL, ABS, LR, BV, DNV
- Extensive range of accessories provides complete measuring point solutions

Table of contents

Document information 3
Document conventions 3

Function and system design 5
Device selection 5
Measuring principle 6
Measuring system 7
Level measurement with absolute pressure probe and external pressure signal 9
Density compensation with Pt100 temperature sensor 9
Communication protocol 10
System integration 10

Input 11
Measured variable 11
Measuring range 11
Input signal 11

Output 12
Output signal 12
Signal range 12
Signal on alarm 12
Load 12
Damping 13

Power supply 13
Supply voltage 13
Power consumption 13
Current consumption 13
Measuring unit electrical connection 13
Cable specifications 15
Residual ripple 15

Performance characteristics 15
Reference operating conditions 15
Reference accuracy 16
Resolution 16
Long-term stability 16
Influence of medium temperature 16
Warm-up period 16
Step response time 16

Installation 17
Installation instructions 17
Additional installation instruction 17

Environment 18
Ambient temperature range 18
Storage temperature range 18
Degree of protection 18
Geometric height according to IEC61010-1 Ed.3 18
Electromagnetic compatibility (EMC) 18
Overvoltage protection 19

Process 19
Medium temperature range 19
Medium temperature limits 19

Mechanical construction 20
Dimensions of the level probe 20
Dimensions of the mounting clamp 20
Dimensions of the extension cable mounting screws 21
Dimensions of the IP66, IP67 terminal boxes with filters . . . 21
Dimensions of the TMT182 temperature head transmitter . 22
Terminal box with integrated TMT182 temperature head transmitter (4 to 20 mA HART) 22
Weight 22
Material 23
Extension cable 25
Terminals 25

Operability 26
FieldCare 26
Field Xpert SFX 26

Certificates and approvals 27
CE mark 27
Ex approval 27
Drinking water approval 27
Marine certificate 27
Standards and guidelines 27

Ordering information 28
FMX21 28
FMX21 (continued) 29

Accessories 30
Mounting clamp 30
Terminal box 30
Additional weight 30
TMT182 temperature head transmitter (4 to 20 mA HART) 30
Extension cable mounting screw 30
Terminals 30
Cable shortening kit 31
Cable marking 31
Testing adapter 31

Documentation 32
Field of activities 32
Technical Information 32
Operating Instructions 32
Safety instructions 32
Drinking water approval 32

Patents 32

Configuration data sheet 33
Level 33
Pressure 33

Document information

Document conventions

Safety symbols

Symbol	Meaning
DANGER	**DANGER!** This symbol alerts you to a dangerous situation. Failure to avoid this situation will result in seriousor fatal injury.
WARNING	**WARNING!** This symbol alerts you to a dangerous situation. Failure to avoid this situation can result in seriousor fatal injury.
CAUTION	**CAUTION!** This symbol alerts you to a dangerous situation. Failure to avoid this situation can result in minoror medium injury.
NOTICE	**NOTICE!** This symbol contains information on procedures and other facts which do not result in personalinjury.

Electrical symbols

Symbol	Meaning
⎓	**Direct current** A terminal to which DC voltage is applied or through which direct current flows.
~	**Alternating current** A terminal to which alternating voltage is applied or through which alternating current flows.
≂	**Direct current and alternating current** • A terminal to which alternating voltage or DC voltage is applied. • A terminal through which alternating current or direct current flows.
⏚	**Ground connection** A grounded terminal which, as far as the operator is concerned, is grounded via a grounding system.
⏚	**Protective ground connection** A terminal which must be connected to ground prior to establishing any other connections.
⏚	**Equipotential connection** A connection that has to be connected to the plant grounding system: This may be a potential equalization line or a star grounding system depending on national or company codes of praxis.

Symbols for certain types of information

Symbol	Meaning
ℹ	**Tip** Indicates additional information.
	Reference to page Refers to the corresponding page number.

Symbols in graphics

Symbol	Meaning
1, 2, 3, 4, ...	Item numbers
A, B, C, D, ...	Views

	Hazardous area Indicates a hazardous area.
	Safe area (non-hazardous area) Indicates a non-hazardous location.

Symbols at the device

Symbol	Meaning
	Connecting cable immunity to temperature change Indicates that the connecting cables must be able to withstand temperatures of at least 85 °C (185 °F).

Function and system design

Device selection

Waterpilot FMX21			
Field of application	Hydrostatic level measurement in deep wells e.g. drinking water	Hydrostatic level measurement in wastewater	Hydrostatic level measurement in saltwater
	NOTICE **The Waterpilot is not suitable for use in biogas plants since the gases can diffuse through the elastomers (seals, extension cable).** ▸ For applications with biogas Endress+Hauser offers the level transmitter Deltapilot.		
Process connection	▪ Mounting clamp ▪ Extension cable mounting screw with G 1½" A or NPT 1½" thread		
Outer diameter	22 mm (0.87 in)	42 mm (1.65 in)	max. 29 mm (1.14 in)
Extension cable	PE, PUR, FEP (→ 🗎 25)		
Seals	▪ FKM Viton ▪ EPDM [1]	FKM Viton	▪ FKM Viton ▪ EPDM [1]
Measuring ranges	▪ Gauge pressure: from 0 to 0.1 bar to 0 to 20 bar (0 to 1.5 psi to 0 to 300 psi) ▪ Absolute pressure: from 0 to 2 bar to 0 to 20 bar (0 to 30 psi to 0 to 300 psi)		▪ Gauge pressure: from 0 to 0.1 bar to 0 to 4 bar (0 to 1.5 psi bis 0 to 60 psi) ▪ Absolute pressure: from 0 to 2 bar to 0 to 4 bar (0 to 1.5 psi bis 0 to 60 psi)
	▪ Customer-specific measuring ranges; factory-calibrated ▪ The following output units can be configured: %, mbar, bar, kPa, MPa, mmH_2O, mH_2O, inH_2O, ftH_2O, psi and numerous level units.		
Overload	Up to 40 bar (600 psi)		Up to 25 bar (375 psi)
Process temperature range	−10 to +70 °C (+14 to +158 °F)		0 to +50 °C (+32 to +122 °F)
Reference accuracy	▪ ±0.2 % of the set span ▪ Optional: ±0.1 % of set span (PLATINUM version)		
Supply voltage	10.5 to 35 V DC, Ex: 10.5 to 30 V DC		
Output	4 to 20 mA (invertible) with superimposed digital communication protocol HART 6.0, 2-wire		
Options	Drinking water approval	—	
	▪ Large selection of approvals, including ATEX, FM, CSA ▪ Broad range of accessories ▪ Integrated Pt100 temperature sensor and TMT182 temperature head transmitter (4 to 20 mA HART) ▪ Marine certificate		
Specialties	▪ High-precision, robust ceramic measuring cell with long-term stability ▪ Automatic density compensation ▪ Customer specific cable marking ▪ Absolute pressure measuring cell		

1) Recommended for drinking water applications and not for use in hazardous areas.

Measuring principle

The ceramic measuring cell is a dry measuring cell, i.e. pressure acts directly on the robust ceramic process isolating diaphragm of the Waterpilot FMX21.
Any changes in the air pressure are routed through the extension cable, via a pressure compensation tube, to the rear of the ceramic process isolating diaphragm and compensated for. A pressure-dependent change in capacitance caused by the movement of the process isolating diaphragm is measured at the electrodes of the ceramic carrier. The electronics then convert this into a signal which is proportional to the pressure and is linear to the level of the medium.

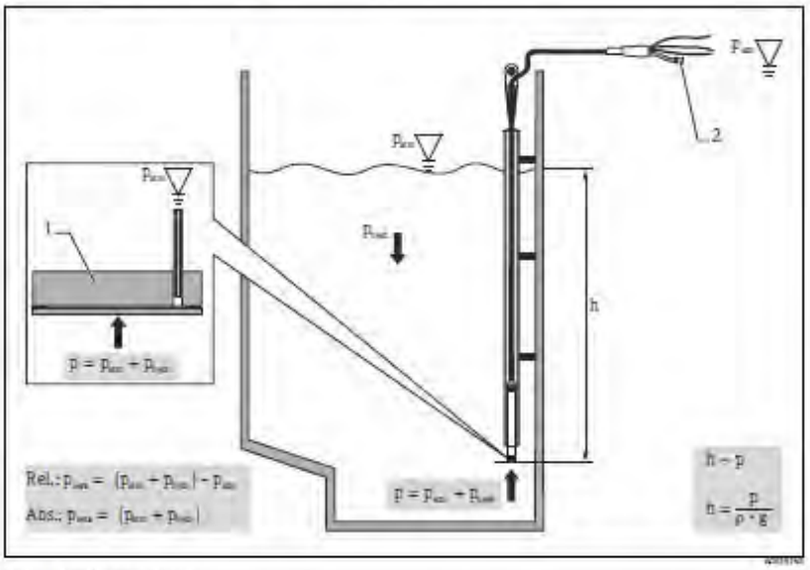

1 *Ceramic measuring cell*
2 *Pressure compensation tube*

h *Level height*
p *Total pressure = atmospheric pressure + hydrostatic pressure*
ρ *Density of the medium*
g *Gravitational acceleration*
$p_{hyd.}$ *Hydrostatic pressure*
p_{atm} *Atmospheric pressure*
$p_{sen.}$ *Pressure displayed on the sensor*

Temperature measurement with optional Pt100 resistance thermometer [1)]

Endress+Hauser also offers the Waterpilot FMX21 with an optional 4-wire Pt100 resistance thermometer to measure level and temperature simultaneously (→ 30). The Pt100 belongs to Accuracy Class B in accordance with DIN EN 60751.

Temperature measurement with optional Pt100 and TMT182 temperature head transmitter [1)]

Endress+Hauser also offers the TMT182 temperature head transmitter with the HART protocol to convert the temperature signal to an analog, scalable 4 to 20 mA output signal superimposed with HART 6.0.
See also: "Density compensation with Pt100 temperature sensor" (→ 9); "Ordering information" (→ 28); "Accessories" (→ 30) and Technical Information TI00078R.

1) Not for use in hazardous areas.

Measuring system

As standard, the complete measuring system consists of a Waterpilot FMX21 and a transmitter power supply unit with a supply voltage of 10.5 to 30 V DC (hazardous areas) or 10.5 to 35 V DC (non-hazardous areas).

Possible measuring point solutions with a transmitter and evaluation units from Endress+Hauser:

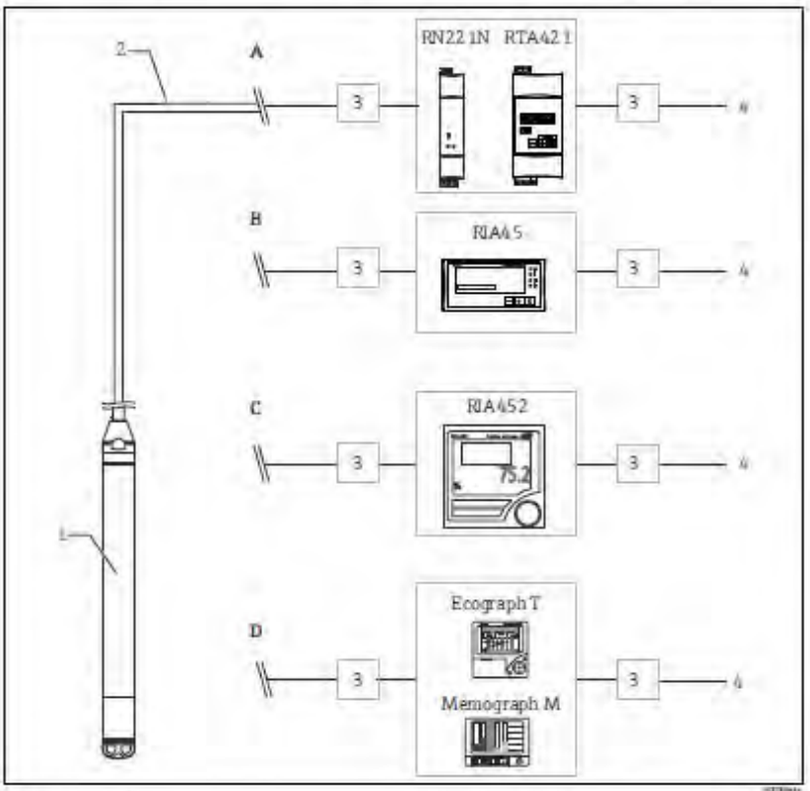

Application examples

1 *Waterpilot FMX21 HART*
2 *4 to 20 mA HART*
3 *Overvoltage protection (OP), e.g. HAW from Endress+Hauser (not for use in hazardous areas)*
- OP on the sensor side for field installation: HAW569; for top-hat rail/DINrail: HAW562/intrinsically safe HAW562Z
- OP on the supply side for top-hat rail/DINrail: HAW561 (115/230 V) and HAW561K (24/48 V AC/DC)
The overvoltage protection selected must be appropriate for the supply voltage.
4 *Power supply*

A Simple cost-effective measuring point solution: Power supply of Waterpilot in hazardous and non-hazardous areas using RN221N active barrier. Power supply and additional control of two consumers, e.g. pumps, via limit switch RTA421 with onsite display.

B Evaluation unit RIA45 (for panel mounting) provides a power supply system, an onsite display and two switch outputs.

C If several pumps are used, the pump service life can be prolonged by alternate switching. With alternating pump control, the pump which was out of service for the longest period of time is switched on. The evaluation unit RIA452 (for panel mounting) provides this option in additional to several other functions.

D State-of-the-art recording technology with graphic display recorders from Endress+Hauser, such as Ecograph T, Memograph M, or paper recorders such as Alphalog for documenting, monitoring, visualizing and archiving purposes.

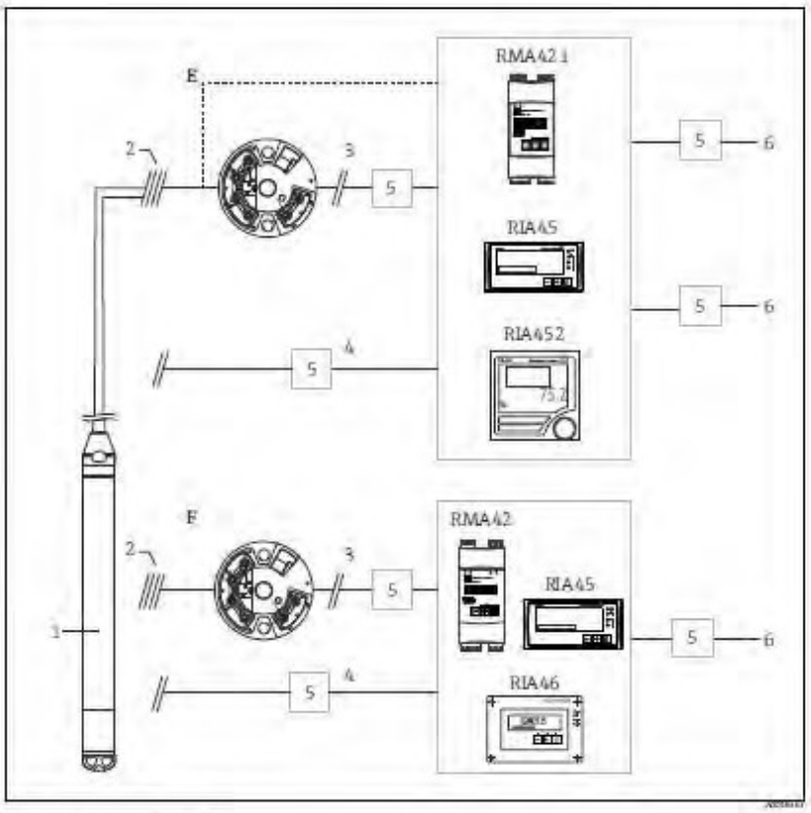

Application examples with Pt100

1 *Waterpilot FMX21 HART*
2 *Connection for integrated Pt100 temperature sensor in the FMX21*
3 *4 to 20 mA HART (Temperature)*
4 *4 to 20 mA HART (Level)*
5 *Overvoltage protection (OP), e.g. HAW from Endress+Hauser (not for use in hazardous areas)*
- OP on the sensor side for field installation: HAW569; for top-hat rail/DINrail: HAW562/intrinsically safe HAW562Z
- OP on the supply side for top-hat rail/DINrail: HAW561 (115/230 V) and HAW561K (24/48 V AC/DC)
The overvoltage protection selected must be appropriate for the supply voltage.
6 *Power supply*

E If you want to measure, display and evaluate the temperature as well as the level, e.g. to monitor temperature in fresh water to detect temperature limits for germ formation, you have the following options:
The optional TMT182 temperature head transmitter can convert the Pt100 signal to a 4 to 20 mA HART signal and transfer it to any common evaluation unit. The RMA421, RIA45 and RIA452 evaluation units also offer a direct input for the Pt100 signal.

F If you want to record and evaluate the level and temperature measured value with one device, use the RMA42, RIA45 and RIA46 evaluation units with two inputs. It is even possible to mathematically link the input signals with this unit. These evaluation units are not HART-compatible.

Level measurement with absolute pressure probe and external pressure signal

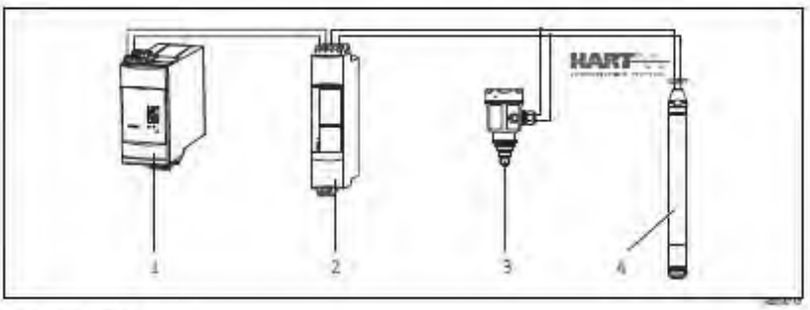

1 *Fieldgate FXA520*
2 *Multidrop-Connector FXN520*
3 *Cerabar*
4 *Waterpilot FMX21*

It is advisable to use an absolute pressure probe for applications in which condensation can occur. In the case of level measurement with an absolute pressure probe, the measured value is affected by fluctuations in the ambient pressure. To correct the resulting measured error, you can connect an external absolute pressure sensor (e.g. Cerabar) to the HART signal cable, switch the waterpilot to the burst mode and the Cerabar to operate in mode 'Electr. Delta P'.
The external absolute pressure sensor then calculates the difference between the two pressure signals and can thus determine the level precisely. Only one level measured value can be corrected in this way.

If using intrinsically safe devices, strict compliance with the rules for interconnecting intrinsically safe circuits as stipulated in IEC60079-14 (proof of intrinsic safety) is mandatory.

Density compensation with Pt100 temperature sensor

The Waterpilot FMX21 can correct measured errors that result from fluctuations in the density of the water caused by temperature. Users can choose from the following options:

Use the internally measured sensor temperature of the FMX21

The internally measured sensor temperature is calculated in the Waterpilot FMX21 for density compensation. The level signal is thus corrected according to the density characteristic line of the water.

Use the optional internal temperature sensor for density compensation in a suitable HART master (e.g. PLC)

The Waterpilot FMX21 is available with an optional Pt100 temperature sensor. Endress+Hauser additionally offers the TMT182 temperature head transmitter to convert the Pt100 signal to a 4 to 20 mA HART signal.
The temperature and pressure signals are transmitted to the HART master (e.g. PLC) where a corrected level value can be generated using a stored linearization table or the density function (of a chosen medium).

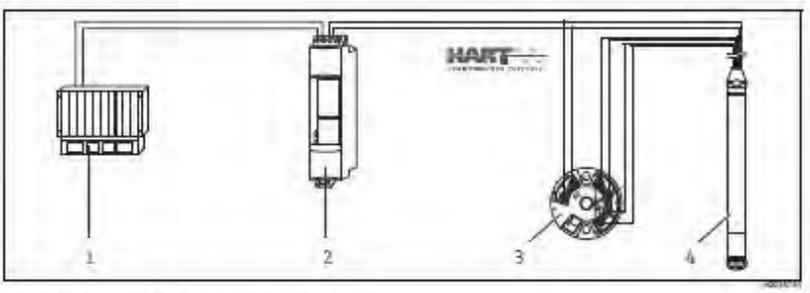

1 *HART Master, e.g. PLC (programmable logic controller)*
2 *FXN520 Multidrop-Connector*
3 *TMT182 Temperature head transmitter*
4 *Waterpilot FMX21*

Use an external temperature signal which is transmitted to the FMX21 via HART burst mode

The Waterpilot FMX21 is available with an optional Pt100 temperature sensor. In this case, the signal of the Pt100 is analyzed using a HART-compliant (at least HART 5.0) temperature transmitter that supports BURST mode. The temperature signal can thus be transmitted to the FMX21. The FMX21 uses this signal for the density correction of the level signal.

The TMT182 temperature head transmitter is not suitable for this configuration.

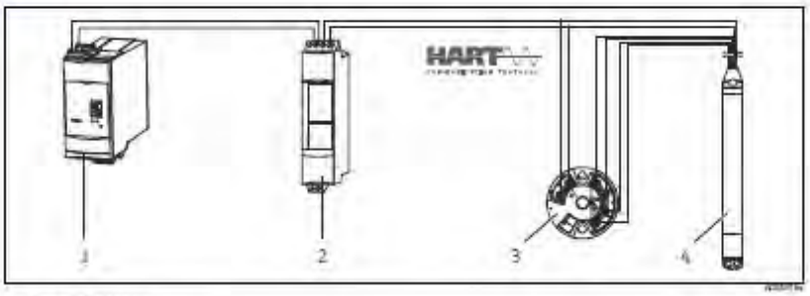

1 Fieldgate FXA520
2 Multidrop-Connector FXN520
3 TMT182 Temperature head transmitter
4 Waterpilot FMX21

Without additional compensation due to the anomaly of water, errors of up to 4 % may occur at a temperature of +70 °C (+158 °F), for example. With density compensation, this error can be decreased to 0.5% in the entire temperature range from 0 to +70 °C (+32 to +158 °F).

For further information please refer to the appropriate Technical documentation:
- TI00078R: TMT182 temperature head transmitter (4 to 20 mA/HART)
- TI00369F: FXA520 Fieldgate
- TI00400F: FXN520 multidrop connector

Communication protocol	4 to 20 mA HART with communication protocol
System integration	The device can be fitted with a tag name, "Ordering information", feature 895 "Marking" version "Z1" (→ 28).

Input

Measured variable

FMX21 + Pt100 (optional)

- Hydrostatic pressure of a liquid
- Pt100: temperature

TMT182 temperature head transmitter (optional)

Temperature

Measuring range

- Customer-specific measuring ranges or factory calibration
- Temperature measurement from −10 to +70 °C (+14 to +158 °F) with Pt100 (optional)

Sensor measuring range [bar (psi)]	Smallest span that can be calibrated [1] [bar (psi)]	Vacuum resistance [bar_{abs} (psi_{abs})]	Version in the order code [2]
Gauge pressure			
0.1 (1.5)	0.01 (0.15)	0.3 (4.5)	1C
0.2 (3.0)	0.02 (0.3)	0.3 (4.5)	1D
0.4 (6.0)	0.04 (1.0)	0	1F
0.6 (9.0)	0.06 (1.0)	0	1G
1.0 (15.0)	0.1 (1.5)	0	1H
2.0 (30.0)	0.2 (3.0)	0	1K
4.0 (60.0)	0.4 (6.0)	0	1M
10.0 (150) [3]	1.0 (15)	0	1P
20.0 (300) [3]	2.0 (30)	0	1Q
Absolute pressure			
2.0 (30.0)	0.2 (3.0)	0	2K
4.0 (60.0)	0.4 (6.0)	0	2M
10.0 (150) [3]	1.0 (15)	0	2P
20.0 (300) [3]	2.0 (30)	0	2Q

1) Recommended Turn down: Max 100:1
Factory calibration Turn down: Max 20:1, higher on request.

2) Ordering information (→ 28)

3) These measuring ranges are not offered for the probe version with plastic insulation, outer diameter 29 mm (1.14 in).

Input signal

FMX21 + Pt100 (optional)

- Change in capacitance
- Pt100: change in resistance

TMT182 temperature head transmitter (optional)

Pt100 resistance signal, 4-wire

Output

Output signal	**FMX21 + Pt100 (optional)** ▪ 4 to 20 mA with overlying digital HART 6.0 communication protocol, 2-wire for hydrostatic pressure measured value ▪ Pt100: Temperature-dependent resistance values	**TMT182 temperature head transmitter (optional)** 4 to 20 mA with overlying digital HART 5.0 communication protocol for temperature measured value, 2-wire
Signal range	3.8 to 20.5 mA	
Signal on alarm	**FMX21 + Pt100 (optional)** 4 to 20 mA HART Options: ▪ Max. alarm (factory setting 22mA): can be set from 21 to 23 mA ▪ Hold measured value: last measured value is held ▪ Min. alarm: 3.6 mA	**TMT182 temperature head transmitter (optional)** Options: ▪ Max. alarm ≥ 21.0 mA ▪ Min. alarm ≤ 3.6 mA
Load	**FMX21** $R_{L\,max} \leq \frac{U - 10.5\,V}{23\,mA} - 2 \cdot 0.09\,\frac{\Omega}{m} \cdot L - R_{add}$	**TMT182 temperature head transmitter (optional)** $R_{L\,max} \leq \frac{U - 11.5\,V}{0.023\,A} - R_{add}$

R_{Lmax} = *Max. load resistance [Ω]*
R_{add} = *Additional resistances such as resistance of evaluation unit and/or display unit, cable resistance [Ω]*
U = *Supply voltage [V]*
l = *Simple length of extension cable [m], (cable resistance per wire ≤0.09 Ω /m)*

When using the measuring device in hazardous areas, installation must comply with the corresponding national standards and regulations and the Safety Instructions or Installation or Control Drawings (XA).

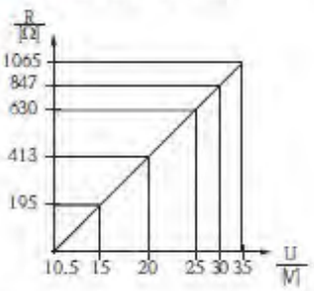

FMX21 load chart for estimating the load resistance. Additional resistances, such as the resistance of the extension cable, have to be subtracted from the value calculated as shown in the equation.

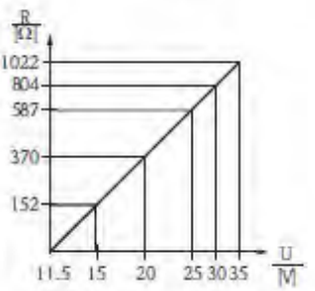

Temperature head transmitter TMT182 load chart for estimating the load resistance. Additional resistances have to be subtracted from the value calculated as shown in the equation.

When operating using a HART handheld terminal or a PC with an operating program, a minimum communication resistance of 250 Ω has to be taken into account.

Damping	• Continuously 0 to 999 s via HART handheld terminal or PC with operating program • Factory setting: 2 s

Power supply

When using the measuring device in hazardous areas, installation must comply with the applicable national standards and regulations and the Safety Instructions (XAs) and the Installation or Control Drawings (ZDs). All explosion-protection data are given in a separate documentation which is available upon request. This documentation is provided with the devices as standard (→ 32).

Supply voltage	**FMX21 + Pt100 (optional)** • 10.5 to 35 V (non-hazardous area) • 10.5 to 30 V (hazardous area)	**TMT182 temperature head transmitter (optional)** 11.5 to 35 V DC
Power consumption	**FMX21 + Pt100 (optional)** • ≤ 0.805 W at 35 V DC (non-hazardous area) • ≤ 0.690 W at 30 V DC (hazardous area)	**TMT182 temperature head transmitter (optional)** ≤ 0.805 W at 35 V DC
Current consumption	**FMX21 + Pt100 (optional)** • Max. current consumption: ≤ 23 mA Min. current consumption: ≥ 3.6 mA • Pt100: ≤ 0.6 mA	**TMT182 temperature head transmitter (optional)** • Max. current consumption: ≤ 23 mA Min. current consumption: ≥ 3.5 mA • Pt100 via temperature head transmitter: ≤ 0.6 mA

Measuring unit electrical connection

- Reverse polarity protection is integrated in the Waterpilot FMX21 and in the TMT182 temperature head transmitter. Changing the polarities will not damage the devices.
- The cable must end in a dry room or a suitable terminal box. The terminal box (IP66/IP67) with a GORE-TEX® filter from Endress+Hauser is suitable for outdoor installations. The terminal box can be ordered as an accessory using the order code for FMX21 version "PS" for feature 620 (→ 28).

The electrical connection is made with the corresponding wires of the probe cable and with the optional use of the terminal box (Commubox FXA) or an active barrier (e.g. RN221N).

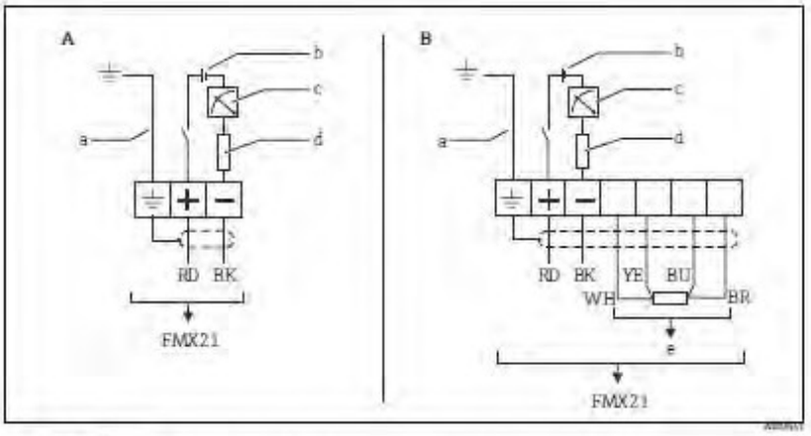

A Waterpilot FMX21
B Waterpilot FMX21 with Pt100 [1] Version "NB" for feature 610 'Accessories' in the order code (→ 28)

a Not for FMX21 with an outer diameter of 29 mm (1.14 in)
b 10.5 to 30 V DC (Ex), 10.5 to 35 V DC
c 4 to 20 mA
d Resistance (R_L)
e Pt100

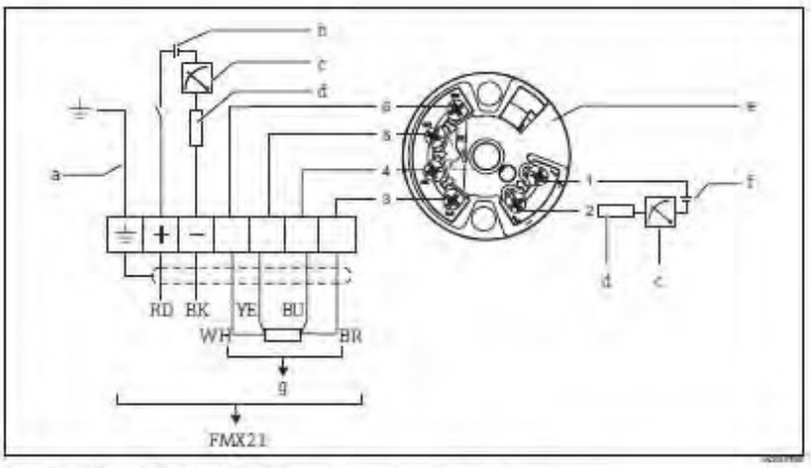

Waterpilot FMX21 with Pt100 and TMT182 temperature head transmitter (4 to 20 mA) [1] versions "NB" and "PT", feature 610 and 620 in the order code (→ 28)

a Not for FMX21 with an outer diameter of 29 mm (1.14 in)
b 10.5 to 35 V DC
c 4 to 20 mA
d Resistance (R_L)
e TMT182 temperature head transmitter (4 to 20 mA)
f 11.5 to 35 V DC
g Pt100

[1] Not for use in hazardous areas.

Wire colors
RD = red, BK = black, WH = white, YE = yellow, BU = blue, BR = brown

Connection classification as per IEC 61010-1:

- Overvoltage category 1
- Pollution degree 1

Connection data in the hazardous area

4 to 20 mA	Ex ia IIC T4 to T6
Ui	30 V DC
Ii	133 mA
Pi	1.0 W
Ci	10.3 nF (sensor); 180 pF/m (cable)
Li	0 µH (sensor); 1 µH/m (cable)
Ta	-10 °C (+14 °F) ≤ Ta ≤ +70 °C (+158 °F) for T4; -10 °C (+14 °F) ≤ Ta ≤ +40 °C (+104 °F) for T6

Cable specifications

FMX21 + Pt100 (optional)

- Commercially available instrument cable
- Terminal, terminal box: 0.08 to 2.5 mm^2 (28 to 14 AWG)
- If the Pt100 signal is directly connected to a display and/or evaluation unit, Endress+Hauser recommends using a shielded cable.

TMT182 temperature head transmitter (optional)

- Commercially available instrument cable
- Terminal, terminal box: 0.08 to 2.5 mm^2 (28 to 14 AWG)
- Transmitter connection: max. 1.75 mm^2 (15 AWG)

Residual ripple

FMX21 + Pt100 (optional)

No impact on the 4 to 20 mA signal to ±5 % residual ripple within the permitted voltage range (according to HART Hardware Specification HCF_SPEC-54 (DIN IEC 60381-1))

TMT182 temperature head transmitter (optional)

$U_{ss} \geq 3$ V at $U \geq 13$ V, $f_{max.} = 1$ kHz

Performance characteristics

Reference operating conditions

FMX21 + Pt100 (optional)

- As per IEC 60770
- Ambient temperature T_A = constant, in range: +21 to +33 °C (+70 °F to +91 °F)
- Humidity φ = constant, in range: 20 to 80 % RH
- Ambient pressure p_A = constant, in range: 860 to 1060 mbar (13 to 16 psi)
- Position of the measuring cell = constant, in range, vertical: ±1°
- Supply voltage constant: 21 V DC to 27 V DC
- Load with HART: 250 Ω
- Pt100: DIN EN 60770 T_A = 25 °C (77 °F)

TMT182 temperature head transmitter (optional)

Calibration temperature 25 °C (77 °F) ±5 K

Reference accuracy	**FMX21 + Pt100 (optional)** The reference accuracy comprises the non-linearity after limit point configuration, hysteresis and non-repeatability in accordance with IEC 60770. • Setting ±0.2 % – to TD 5:1: < 0.2 % of the set span – from TD 5:1 to TD 10:1 ±(0.02 x TD+0.1) PLATINUM version: • Setting ±0.1 % (optional) – to TD 5:1: < 0.1 % of the set span – from TD 5:1 to TD 10:1 ±(0.02 x TD) • Class B to DIN EN 60751 – Pt100: max. ±1 K	**TMT182 temperature head transmitter (optional)** • ±0.2 K • With Pt100: max. ±0.9 K
Resolution	Current output: 1 µA **Read cycle** HART commands: 2 to 3 per second on average	
Long-term stability	**FMX21 + Pt100 (optional)** • ≤ 0.1 % of URL/year • ≤ 0.25 % of URL/5 years	**TMT182 temperature head transmitter (optional)** ≤ 0.1 K per year
Influence of medium temperature	• Thermal change in the zero output and the output span 0 to +30 °C (+32 to +86 °F): <(0.15 + 0.15 x TD)% −10 to +70 °C (+14 to +158 °F): <(0.4 + 0.4 x TD)% • Temperature coefficient (T_K) of the zero output and output span −10 to +70 °C (+14 to +158 °F): 0.1 % / 10 K URL	
Warm-up period	**FMX21 + Pt100 (optional)** • FMX21: < 6 s • Pt100: 20 ms	**TMT182 temperature head transmitter (optional)** 4 s
Step response time	**FMX21 + Pt100 (optional)** • FMX21: 400 ms (T90 time), 500 ms (T99 time) • Pt100: 160 s (T90 time), 300 s (T99 time)	—

Installation

Installation instructions

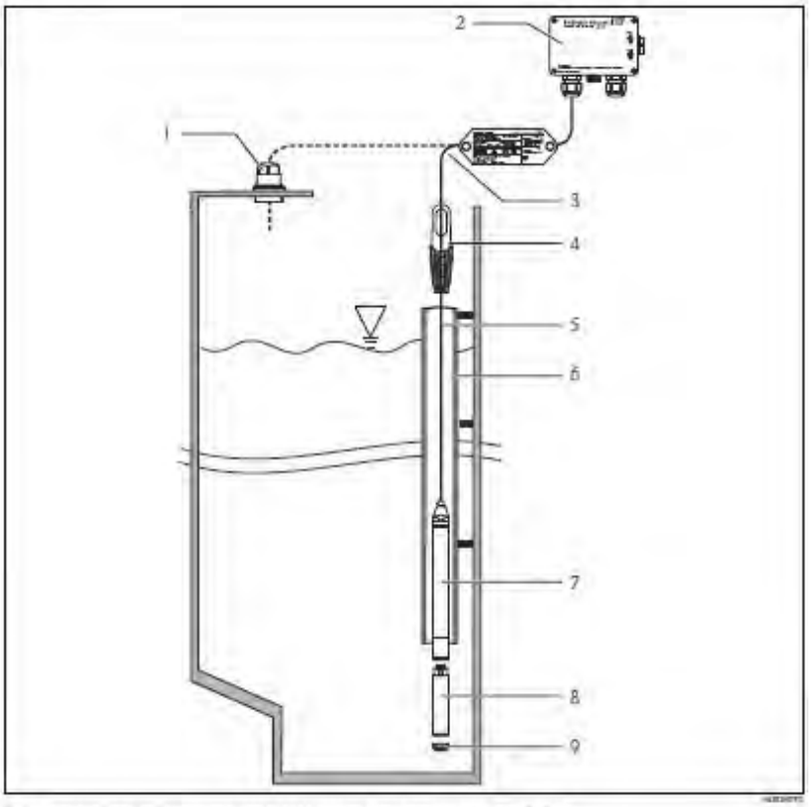

Installation examples, here illustrated with FMX21 with an outer diameter of 22 mm (0.87 in)

1 *Extension cable mounting screw can be ordered via order code or as an accessory (→ 28)*
2 *Terminal box can be ordered via order code or as an accessory (→ 28)*
3 *Extension cable bending radius > 120 mm (4.72 in)*
4 *Mounting clamp can be ordered via order code or as an accessory (→ 28)*
5 *Extension cable, length (→ 25)*
6 *Guide pipe*
7 *Waterpilot FMX21*
8 *Additional weight can be ordered as an accessory for FMX21 with an outer diameter of 22 mm (0.87 in) and 29 mm (1.14 in)*
9 *Protection cap*

Additional installation instruction

- Sideways movement of the level probe can result in measuring errors. For this reason, install the probe at a point free from flow and turbulence, or use a guide tube. The internal diameter of the guide tube should be at least 1 mm (0.04 in) bigger than the outer diameter of the selected FMX21.
- The device is provided with a protection cap to prevent mechanical damage to the measuring cell.
- The cable must end in a dry room or a suitable terminal box. The terminal box from Endress+Hauser provides optimum humidity and climatic protection and is suitable for outdoor installation (→ 30).
- Rod length tolerances: < 5 m (16 ft): ±17.5 mm (0.69 in); > 5 m (16 ft): ±0.2 % (→ 31)
- If the cable is shortened, the filter at the pressure compensation tube has to be reattached. Endress+Hauser offers a cable shortening kit for this purpose → 28 ff; (SD00552P/00/A6).
- Endress+Hauser recommends using twisted, shielded cables.
- Note for ship building applications: Measures for limitation of the propagation of fire along cable bundles are required (fire stops).

Environment

Ambient temperature range	**FMX21 + Pt100 (optional)** ▪ With outer diameter of 22 mm (0.87 in) and 42 mm (1.65 in): −10 to +70 °C (+14 to +158 °F) (= medium temperature) ▪ With outer diameter of 29 mm (1.14 in): 0 to +50 °C (+32 to +122 °F) (= medium temperature) **Cable** (fixed installation) ▪ PE: −30 to +70 °C (−22 to +158 °F) ▪ FEP: −40 to +70 °C (−40 to +158 °F) ▪ PUR: −40 to +70 °C (−40 to +158 °F) **Terminal box** −40 to +80 °C (−40 to +176 °F)	**TMT182 temperature head transmitter (optional)** −40 to +85 °C (−40 to +185 °F)
Storage temperature range	**FMX21 + Pt100 (optional)** −40 to +80 °C (−40 to +176 °F) **Cable** (fixed installation) ▪ PE: −30 to +70 °C (−22 to +158 °F) ▪ FEP: −30 to +80 °C (−22 to +176 °F) ▪ PUR: −40 to +80 °C (−40 to +176 °F) **Terminal box** −40 to +80 °C (−40 to +176 °F)	**TMT182 temperature head transmitter (optional)** −40 to +100 °C (−40 to +212 °F)
Degree of protection	**FMX21 + Pt100 (optional)** IP68, permanently hermetically sealed at 20 bar (290 psi)(~200 m H_2O) **Terminal box (optional)** IP66, IP67	**TMT182 temperature head transmitter (optional)** IP00, condensation permitted
Geometric height according to IEC61010-1 Ed.3	Up to 2 000 m (6 600 ft) above MSL.	
Electromagnetic compatibility (EMC)	**FMX21 + Pt100 (optional)** ▪ EMC in accordance with all the relevant requirements of the EN 61326 series. Details are provided in the Declaration of Conformity. ▪ Maximum deviation < 0.5 % of the span.	**TMT182 temperature head transmitter (optional)** EMC in accordance with all the relevant requirements of the EN 61326 series. Details are provided in the Declaration of Conformity.

Overvoltage protection	**FMX21 + Pt100 (optional)** • Integrated overvoltage protection to EN 61000-4-5 (500 V symmetrical/1000 V asymmetrical) • Install overvoltage protection ≥ 1.0 kV, external if necessary	**TMT182 temperature head transmitter (optional)** Install overvoltage protection, external if necessary.

Process

Medium temperature range	**FMX21 + Pt100 (optional)** • With outer diameter of 22 mm (0.87 in) and 42 mm (1.65 in): −10 to +70 °C (+14 to +158 °F) • With outer diameter of 29 mm (1.14 in): 0 to +50 °C (+32 to +122 °F)	**TMT182 temperature head transmitter (optional)** —
Medium temperature limits	**FMX21 + Pt100 (optional)** • With outer diameter of 22 mm (0.87 in) and 42 mm (1.65 in): −20 to +70 °C (−4 to +158 °F) In hazardous areas incl. CSA GP, the medium temperature limit is at −10 to +70 °C (+14 to +158 °F). • With outer diameter of 29 mm (1.14 in): 0 to +50 °C (+32 to +122 °F) The FMX21 can be operated in this temperature range. The specification can then be exceeded, e.g. measuring accuracy.	—

Mechanical construction

Dimensions of the level probe

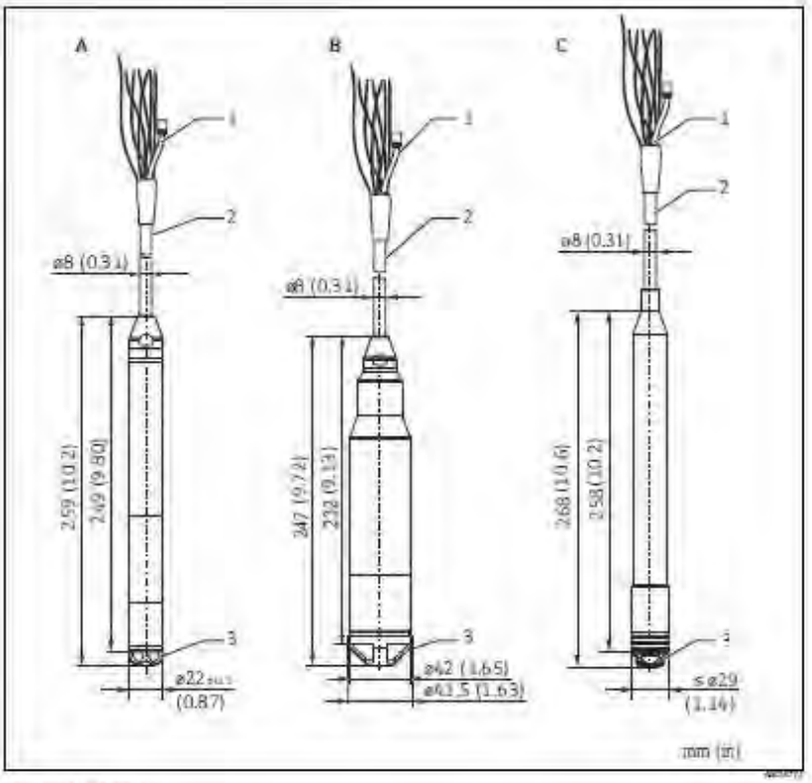

Versions of the FMX21

A *In the order code: feature 45 "Probe tube", version "1" or "Accessories" (→ ☐28)*
B *In the order code: feature 45 "Probe tube", version "2" (→ ☐28)*
C *In the order code: feature 45 "Probe tube", version "5" (→ ☐28)*

1 *Pressure compensation tube*
2 *Extension cable (Length: see → ☐25)*
3 *Protection cap*

Dimensions of the mounting clamp

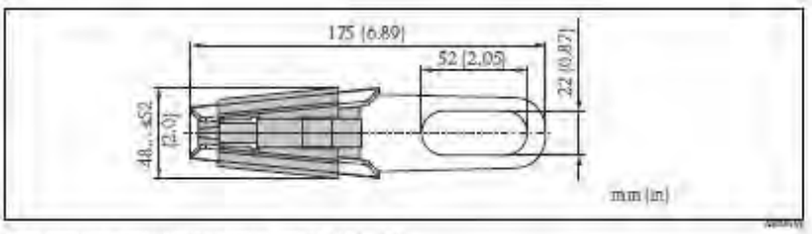

In the order code: feature 620 "Accessories", version "PO" (→ ☐28)

Dimensions of the extension cable mounting screws

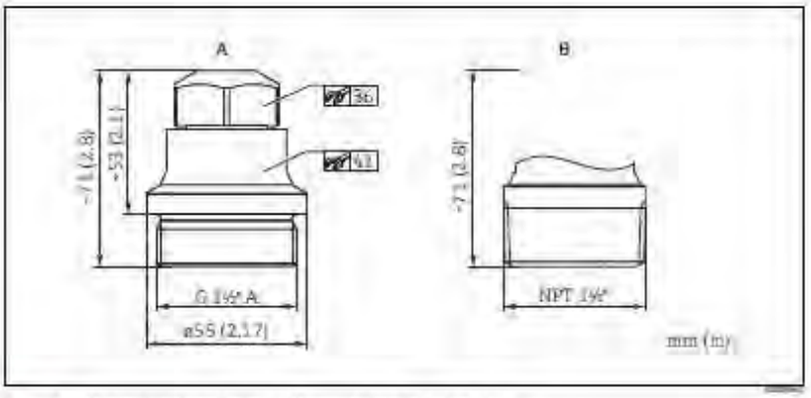

A G 1½" A, in the order code: feature 620 "Accessories", version "PQ" (→ ☞ 28)
B NPT 1½", in the order code: feature 620 "Accessories", version "PR" for (→ ☞ 28)

Application in unpressurized containers only.

Dimensions of the IP66, IP67 terminal boxes with filters

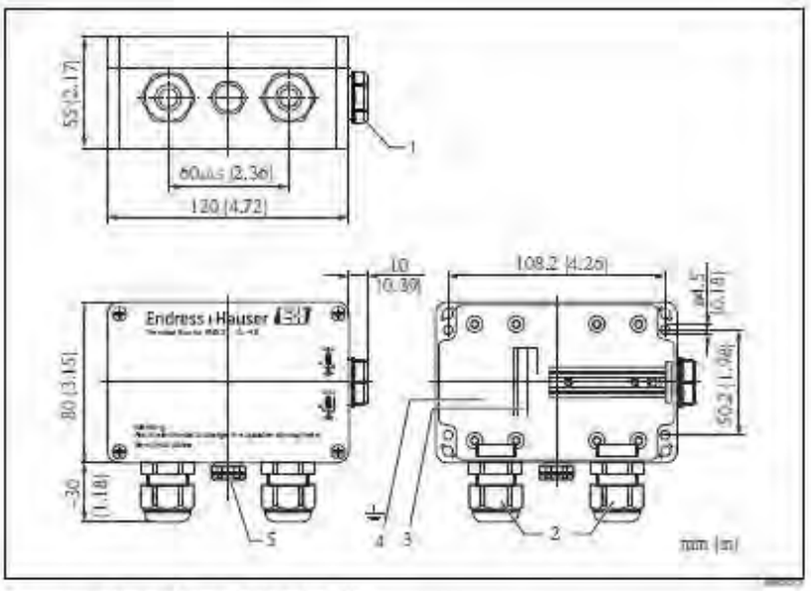

In the order code: feature 620, version "PQ" or "PT" (→ ☞ 28)

1 Dummy plug M20x1.5
2 Cable gland M20x1.5
3 4 to 20 mA; terminals for 0.08 to 2.5 mm² (28 to 14 AWG)
4 Grounc connection; terminals for 0.08 to 2.5 mm² (28 to 14 AWG)
5 GORE-TEX® filter

If ordered together with FMX21 but without the optional TMT182 temperatur transmitter, the terminal box is incl. a 4-terminal strip.

The 4-terminal strip is not intended for use in hazardous areas incl. CSA GP.

Dimensions of the TMT182 temperature head transmitter

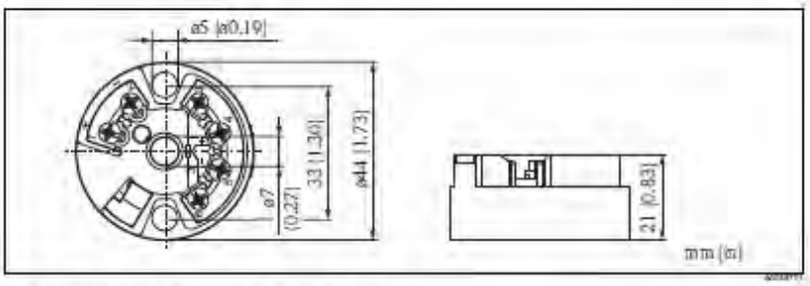

In the order code: feature 620 "Accessories", version "P7" for (→ ⌂28)

Terminal box with integrated TMT182 temperature head transmitter (4 to 20 mA HART)

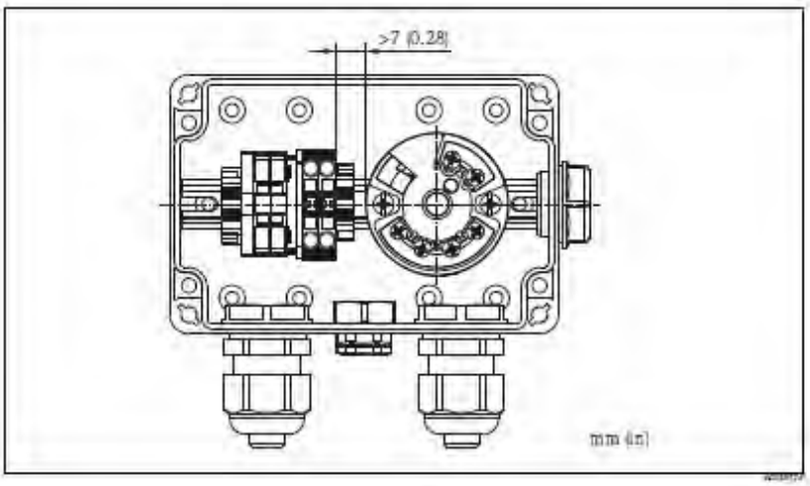

A distance of > 7 mm (> 0.28 in mm) must be maintained between the terminal strip and the TMT182 temperature head transmitter.

Weight

Component part		Weight
Level probe, outer diameter 22 mm (0.87 in)		344 g (12.133 oz)
Level probe, outer diameter 42 mm (1.65 in)		1376 g (48.532 oz)
Level probe, outer diameter 29 mm (1.14 in)		394 g (13.896 oz)
Extension cable	▪ PE ▪ PUR ▪ FEP	▪ 52 g/m (0.035 lbs/1 ft) ▪ 60 g/m (0.040 lbs/1 ft) ▪ 108 g/m (0.072 lbs/1 ft
Mounting clamp		170 g (5.996 oz)
Extension cable mounting screw G 1½" A		770 g (27.158 oz
Extension cable mounting screw NPT 1½"		724 g (25.535 oz)
Terminal box		235 g (8.288 oz)
Temperature head transmitter TMT182		40 g (1.411 oz)
Additional weight		300 g (10.581 oz)
Testing adapter		39 g (1.376 oz)

Material

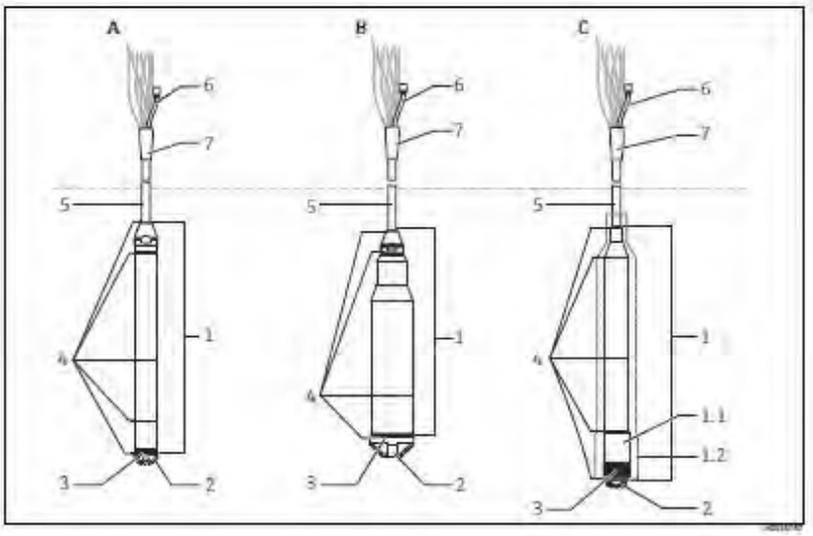

Material in contact with process		
Position number	**Component part**	**Material**
1	**A**: Level probe, outer diameter 22 mm (0.87 in) **B**: Level probe, outer diameter 42 mm (1.65 in) **C**: Level probe, outer diameter max. 29 mm (1.14 in)	316L (1.4404/1.4435)
1.1	Sensor sleeve	PPS (polyphenylene sulfide)
1.2	Heat-shrink sleeve The heat-shrink sleeve at the level probe acts as an insulation. It prevents electrical contact between the probe and the tank. Electrochemical corrosion is thus avoided.	Polyolefin and hot-melt adhesive
2	Protection cap ▪ **A** and **C**: with outer diameter 22 mm (0.87 in) and 29 mm (1.14 in) ▪ **B**: with outer diameter 42 mm (1.65 in)	▪ PPO (Polyphenylenoxid) ▪ PFA (Perfluoralkoxy)
3	Process ceramic	Al_2O_3 (aluminum oxide ceramic)
4	Seal	EPDM or FKM Viton
5	Extension cable insulation For more information → 🗎 25	Either: ▪ PE-LD (low-density polyethylene) ▪ FEP (fluorinated ethylene propylene) ▪ PUR (polyurethane)
Material not in contact with process		
6	Pressure compensation tube	PA
7	Heat-shrink sleeve	Polyolefin

Terminal box (not in contact with process)

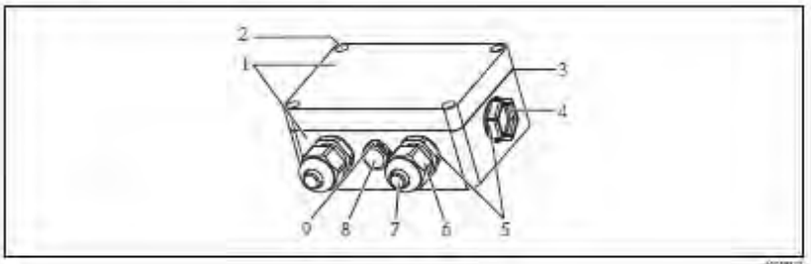

Position number	Component part	Material
1	Housing	PC
2	Mounting screws (4 x)	A2
3	Seal	CR (Chloropren-Unvulcanized rubber)
4	Dummy plug M20x1.5	PBT-GF30
5	Cable gland M20x1.5	PE-HD
6		PA6
7		PA6-GF30
8	Pressure compensation tube	PA6-GF10, ePTFE
9	Pressure compensation tube O-ring	Silicone (VMQ)

Cable mounting screw (not in contact with process)

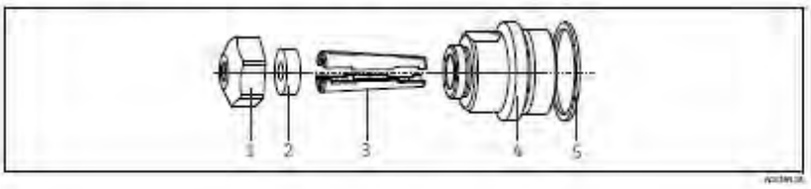

Position number	Component part	Material
1	Cover cable gland	304 (1.4301)
2	Seal	NBR
3	Klemmhülsen	PA66-GF35
4	Anschlussstück cable gland G 1½" A, NPT 1½"	304 (1.4301)
5	Seal → only for G 1½" A	EPDM

Extension cable

PE	PUR	FEP
▪ Abrasion-resistant extension cable with Dynema strain-relief members ▪ Shielded with aluminum-coated film ▪ Insulated with polyethylene (PE), black ▪ Copper wires, twisted ▪ Pressure compensation tube with Teflon filter	▪ Abrasion-resistant extension cable with Dynema strain-relief members ▪ Shielded with aluminum-coated film ▪ Insulated with polyurethane (PUR), black ▪ Copper wires, twisted ▪ Pressure compensation tube with Teflon filter	▪ Abrasion-resistant extension cable ▪ Shielded with galvanized steel wire netting ▪ Insulated with fluorinated ethylene propylene (FEP), black ▪ Copper wires, twisted ▪ Pressure compensation tube with Teflon filter

Cable length

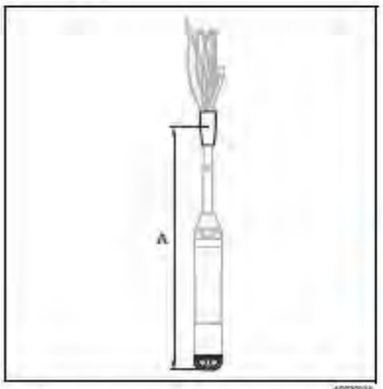

A Cable length

- Please refer also to "Load" (→ ⌃ 12).
- Cable lengths that can be ordered
  - Customer-specific length in meters or feet (→ ⌃ 28, "Ordering information")
  - Limited cable length when performing installation with freely suspended device with extension cable mounting screw or mounting clamp, as well as for hazardous areas: max. 300 m (984 ft).

When using the measuring device in hazardous areas, installation must comply with the applicable national standards and regulations and the Safety Instructions (XAs) or the Installation or Control Drawings (ZDs) "Documentation"

Cross-section
- Total outer diameter: 8.0 mm (0.31 in) ±0.25 mm (±0.01 in)
- FMX21: 3 x 0.227 mm^2 (3 x 26 AWG) + pressure compensation tube with Teflon filter
- FMX21 with Pt100 (optional): 7 x 0.227 mm^2 (7x 26 AWG) + pressure compensation tube with Teflon filter
- Pressure compensation tube with Teflon filter:
  outer diameter 2.5 mm (0.1 in), internal diameter 1.5 mm (0.06 in)

Cable resistance
per wire: ≤ 0.09 Ω/m

Further technical data
- Minimum bending radius: 120 mm (4.72 in)
- Tensile strength: max. 950 N (213.56 lbf)
- Cable extraction force (= necessary tensile force to extract the cable from the level probe):
  - PE, FEP: typical ≥ 400 N (89.92 lbf), PUR: typical ≥ 150 N (33.72 lbf)
  - for use in hazardous areas: ≥ 100 N (73.75 lbf)
- Resistance to UV light
- PE: Usage in drinking water

Terminals

- Three terminals as standard in the terminal box
- 4-terminal strip can be ordered as an accessory, Order No: 52008938
  Conductor cross-section 0.08 to 2.5 mm^2 (28 to 14 AWG)

The 4-terminal strip is not intended for use in hazardous areas incl. CSA GP.

Operability

FieldCare	FieldCare is Endress+Hauser's plant asset management tool based on FDT technology. You can use FieldCare to configure all Endress+Hauser devices as well as third-party devices which support the FDT standard. FieldCare supports the following functions: ▪ Configuration of transmitters in offline and online mode ▪ Loading and saving device data (upload/download) ▪ Documentation of the measuring point Connection options: ▪ Via Commubox FXA195 and the USB port of a computer ▪ Via Fieldgate FXA520 For further information and free download of FieldCare see → www.endress.com → Download → Search: FieldCare
Field Xpert SFX	Field Xpert is an industrial PDA with integrated 3.5" touchscreen from Endress+Hauser based on Windows Mobile. It communicates via wireless with the optional VIATOR® Bluetooth® modem connected to a HART device point-to-point or wireless via WiFi and Endress+Hauser's Fieldgate FXA520. Field Xpert also works as a stand-alone device for asset management applications. For details refer to BA00060S/00/EN.

Certificates and approvals

CE mark

The device meets the legal requirements of the applicable EC Directives. Endress+Hauser confirms successful testing of the device by affixing to it the CE mark.

Ex approval

- ATEX
- CSA C/US
- FM
- IEC
- NEPSI
- INMETRO

- The approvals to apply only for Waterpilot FMX21 without Pt100 and without TMT182.
- Waterpilot FMX21 is only available for use in hazardous areas with the FKM Viton seal.
- All explosion protection data are given in separate documentation which is available upon request. The Ex documentation is supplied as standard with all devices approved for use in explosion hazardous areas (→ 32).

Drinking water approval

For FMX21 with outer diameter 22 mm (0.87 in)
- KTW certificate
- NSF 61 approval
- ACS approval

Marine certificate

- GL (Germanischer Lloyd)
- ABS (American Bureau of Shipping)
- LR (Lloyds Register)
- BV (Bureau Veritas)
- DNV (Det Norske Veritas)

Standards and guidelines

The European standards and guidelines that have been applied are listed in the associated EC Declarations of Conformity. In addition, the following standards were also applied for the Waterpilot FMX21:

- DIN EN 60770 (IEC 60770):
  Transmitters for use in industrial process control systems
  Part 1: Methods for performance evaluation
- DIN 16086:
  Electrical pressure measuring instruments,
  pressure sensors, pressure transmitters,
  pressure measuring instruments, concepts, specifications on data sheets
- EN 61326:
  Electrical equipment for measurement, control and laboratory use – EMC requirements
- EN 61010-1 (IEC 61010-1):
  Safety requirements for electrical equipment for measurement, control and laboratory use
- IEC 60529:
  Degrees of protection provided by enclosures

Ordering information

FMX21

You can enter the versions for the specific feature in the following table. The versions entered make up the complete order code. Options which are mutually exclusive are not marked.

10	**Approval:**	
	AA	Non-hazardous area
	BE	ATEX II 2 G Ex ia IIC T6
	BD	ATEX II 3 G Ex nA IIC T6
	FE	FM IS, CL I Division 1, Groups A – D; AEX ia, zone 1
	CE	CSA C/US IS/CL I Division 1, Groups A – D, Ex ia, zone 1
	CD	CSA General Purpose
	IC	IEC Ex ia IIC T6 Ga
	MA	INMETRO Ex ia IIC T6
	NA	NEPSI Ex ia IIC T6
20	**Output:**	
	2	4-20 mA HART
45	**Probe tube:**	
	1	Outer diameter d = 22 mm, AISI 316L
	2	Outer diameter d = 42 mm, flush-mounted, AISI 316L
	5	Outer diameter d = 29 mm, AISI 316L, PPS/polyolefin for seawater applications
70	**Sensor range:**	
	Measuring range	
	1C	100 mbar/10 kPa/1.5 psi gauge, 1 m H_2O/3 ft H_2O/40 in H_2O
	1D	200 mbar/20 kPa/3 psi gauge, 2 m H_2O/6 ft H_2O/80 in H_2O
	1F	400 mbar/40 kPa/6 psi gauge, 4 m H_2O/13 ft H_2O/160 in H_2O
	1G	600 mbar/60 kPa/9 psi gauge, 6 m H_2O/20 ft H_2O/240 in H_2O
	1H	1 bar/100 kPa/15 psi gauge, 10 m H_2O/33 ft H_2O/400 in H_2O
	1K	2 bar/200 kPa/30 psi gauge, 20 m H_2O/67 ft H_2O/800 in H_2O
	1M	4 bar/400 kPa/60 psi gauge, 40 m H_2O/133 ft H_2O/1600 in H_2O
	1P	10 bar/1 MPa/150 psi gauge, 100 m H_2O/333 ft H_2O/4000 in H_2O
	1Q	20 bar/2 MPa/300 psi gauge, 200 m H_2O/667 ft H_2O/8000 in H_2O
	2K	2 bar/200 kPa/30 psi absolute, 20 m H_2O/67 ft H_2O/800 in H_2O
	2M	4 bar/400 kPa/60 psi absolute, 40 m H_2O/133 ft H_2O/1600 in H_2O
	2P	10 bar/1 MPa/150 psi absolute, 100 m H_2O/333 ft H_2O/4000 in H_2O
	2Q	20 bar/2 MPa/300 psi absolute, 200 m H_2O/667 ft H_2O/8000 in H_2O
80	**Reference accuracy:**	
	D	Platinum
	G	Standard
90	**Calibration, unit:**	
	A	Sensor range; %
	B	Sensor range; mbar/bar
	C	Sensor range; kPa/MPa
	D	Sensor range; mm/mH_2O
	E	Sensor range; in H_2O/ft H_2O
	F	Sensor range; psi
	J	Customized pressure; see additional specification
	K	Customized level; see additional specification
FMX21-		Order code

→ Ordering information for continued on next page

FMX21 (continued)

100		**Probe connection:**
	10	10 m cable, shortable, PE
	11	20 m cable, shortable, PE
	15	..... m cable, shortable, PE
	20	30 ft cable, shortable, PE
	21	60 ft cable, shortable, PE
	25	..... ft cable, shortable, PE
	30	10 m cable, shortable, FEP
	31	20 m cable, shortable, FEP
	35	..... m cable, shortable, FEP
	40	30 ft cable, shortable, FEP
	41	60 ft cable, shortable, FEP
	45	..... ft cable, shortable, FEP
	50	10 m cable, shortable, PUR
	51	20 m cable, shortable, PUR
	55	..... m cable, shortable, PUR
	60	30 ft cable, shortable, PUR
	61	60 ft cable, shortable, PUR
	65	..... ft cable, shortable, PUR
190		**Seal:**
	A	FKM Viton
	H	EPDM
FMX21-		Order code

Additional ordering information (optional)

550		**Calibration**
	F1	Works calib. certificate 5-point
570		**Service**
	IA	Adjusted min alarm current
	IB	Adjusted HART Burst Mode PV
	IR	... m cable marking>installation
	IS	... ft cable marking>installation
	P9	Special version
590		**Additional approval**
	LE	GL Marine certificate
	LF	ABS Marine certificate
	LG	LR Marine certificate
	LH	BV Marine certificate
	LJ	DNV Marine certificate
	LQ	KTW potable water approval
	LR	NSF potable water approval
	LS	ACS potable water approval
610		**Accessories mounted**
	NB	Temperature sensor Pt100, 4-wire
620		**Accessories enclosed**
	PO	Suspension clamp, 316L
	PQ	Cable mounting screw G1/4", 304
	PR	Cable mounting screw NPT1/4", 304
	PS	Terminal box IP66/67
	PT	Temperature head transmitter TMT182, 2-wire, 4-20 mA, -20 to 80 °C
	PU	Additional weight, 316L
	PV	Adapter, function test
	PW	Shortening kit, extension cable
895		**Marking**
	Z1	Tagging (TAG)
FMX21-		Order code

Accessories

Mounting clamp

- Endress+Hauser offers a mounting clamp for easy FMX21 mounting (→ 20).
- Material: 316L (1.4404) and fiberglass reinforced PA (polyamide)
- Order number 52006151, "Ordering information" (→ 28)

Terminal box

- IP66/IP67 terminal boxes with GORE-TEX® filter incl. 3 integrated terminals.
  The terminal box is also suitable for installing a TMT182 temperature head transmitter or for four additional terminals (Order No. 52008938) → 21, "Ordering information" (→ 28).

The terminal box is not intended for the FMX21 with Ex nA explosion protection in the hazardous area. When using the terminal box in hazardous areas, installation must comply with the corresponding national standards and regulations and the Safety Instructions or Installation or Control Drawings.

Additional weight

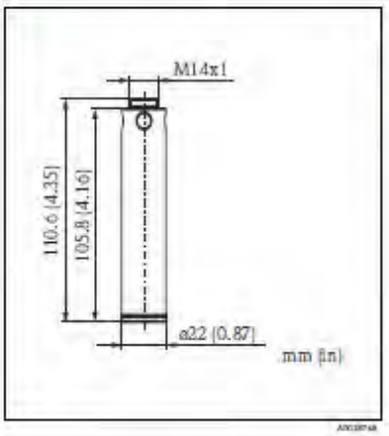

For FMX21 with outer diameter of 22 mm (0.87 in) or 29 mm (1.14 in)

- Endress+Hauser offers additional weights to prevent sideways movement that results in measuring errors, or to make it easier to lower the device in a guide tube.
  You can screw several weights together. The weights are attached directly to the FMX21. For FMX21 with an outer diameter of 29 mm (1.14 in) a maximum of 5 weights may be attached. In combination with the Ex nA approval, for FMX21 with an outer diameter of 29 mm (1.14 in) a maximum of 1 additional weight may be attached.
- Material: 316L (1.4435)
- Weight: 300 g (10.581 oz)
- Order number 52006153, "Ordering information" (→ 28)

TMT182 temperature head transmitter (4 to 20 mA HART)

- 2-wire temperature head transmitter, configured for a measuring range from −20 to +80 °C (-4 to +158 °F). This setting offers a temperature range of 100 K which can be easily mapped. Please note that the Pt100 resistance thermometer is designed for a temperature range from −10 to +70 °C (−14 to +176 °F) → 22.
- Order number: 51001023, Ordering information (→ 28)

The TMT182 temperature head transmitter is not intended for use in hazardous areas incl. CSA GP.

Extension cable mounting screw

Endress+Hauser offers extension cable mounting screws to ease FMX21 mounting and to seal the measuring aperture (→ 21).

- Order number for extension cable mounting screw:
  - 52008264 (G 1½" A)
  - 52009311 (NPT 1½")
- Material (→ 23)

Terminals

- Four terminals in strip for terminal box, suitable for wire cross-section: 0.08 to 2.5 mm² (28 to 14 AWG)
- Order number: 52008938

The 4-terminal strip is not intended for use in hazardous areas incl. CSA GP.

Cable shortening kit

- The cable shortening kit is used to easily and professionally shorten a cable.
- Order Number: 71222671, "Ordering information" and the documentation SD00552P/00/A6 (→ 28)

The cable shortening kit is not intended for the FMX21 with FM/CSA approval.

Cable marking

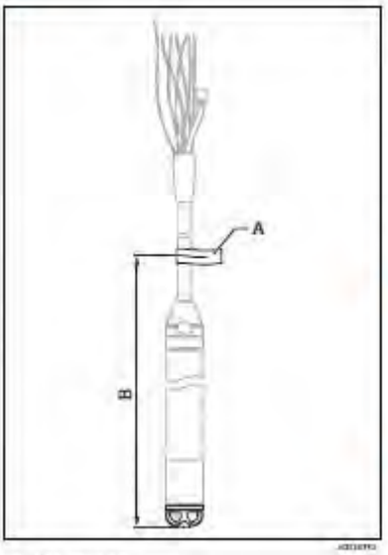

A Cable marking
B Cable marking tolerance

- To make installation easier, Endress+Hauser offers a mark on the extension cable for a customer-specific length, see also → 28, "Ordering information".
- Cable marking tolerance (distance to the lower end of the cable probe):
  Cable length < 5 m (16 ft): ±17.5 mm (0.69 in)
  Cable length > 5 m (16 ft): ±0,2 %
- Material: PET, Adhesive: acrylic
- Immunity to temperature change: −30 to +100 °C (-22 to +212 °F)

NOTICE

The mark is for installation purposes only.

- It must be thoroughly removed without trace in the case of devices with drinking water approval. The extension cable must not be damaged in the process

Not for use in hazardous areas.

Testing adapter

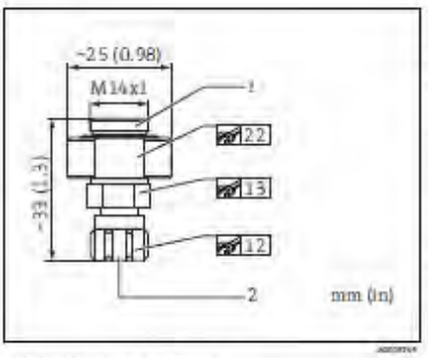

1 FMX21 level probe connection
2 Compressed air hose connection, internal diameter of quick coupling piece 4 mm (0.16 in)

For FMX21 with outer diameter of 22 mm (0.87 in) and 29 mm (1.14 in)

- Endress+Hauser offers a testing adapter to ease function-testing of the level probes.
- Observe the maximum pressure for the compressed air hose and the maximum overload for the level probe (→ 11).
- Maximum pressure of the quick coupling piece supplied: 10 bar (145 psi)
- Adapter material: 304 (1.4301)
- Quick coupling piece material: anodized aluminum
- Adapter weight: 39 g (1.376 oz)
- Order number 52011868 (→ 28)

Documentation

The following document types are also available in the Download Area of the Endress+Hauser website: www.endress.com → Download

Field of activities

- Pressure measurement: FA00004P/00/EN
- Recording technology: FA00014R/09/EN
- System components: FA00016K/09/EN

Technical Information

- Waterpilot FMX167 with 4 to 20 mA analog output: TI00351P/00/EN
- Deltapilot M: TI00437P/00/EN
- Temperature head transmitter iTEMP HART TMT182: TI00078R/09/EN

Operating Instructions

- Waterpilot FMX21: BA00380P/00/EN
- Cable shortening kit: SD00552P/00/A6
- Field Xpert: BA01211S/04/EN

Safety instructions

Safety Instructions (XA) are supplied with the device depending on the approval. These instructions are anintegral part of the Operating Instructions.

Approval	Feature in Order code	Types of protection	Category	Documentation
ATEX	BD	Ex ia IIC	II 2 G	XA00454P
ATEX	BE	Ex nA IIC	II 3 G	XA00485P
IECEx	IC	Ex ia IIC	n/a	XA00455P
CSA C/US	CE	Ex ia IIC	n/a	ZD232P (960008976)
FM	FE	AEx ia IIC	n/a	ZD231P (960008975)
NEPSI	NA	Ex ia IIC	n/a	XA00456P
INMETRO	MA	Ex ia IIC	n/a	XA01066P

The nameplate provides information on the Safety Instructions (XA) that are relevant for the device.

Drinking water approval

- SD00289P/00/A3 (NSF)
- SD00319P/00/A3 (KTW)
- SD00320P/00/A3 (ACS)

Patents

This product is protected by at least one of the following patents. Further patents are pending.

- US 6,427,129 B1 ≙ EP 0 892 249 B1
- US 6,703,943 A1
- DE 203 13 744.2 U1

Configuration data sheet

Level

The following configuration data sheet has to be filled in and included with the order if the option "K: customized level" has been selected in feature "090: Calibration: unit" in the product structure.

Pressure Engineering Unit

☐ mbar	☐ mmH_2O	☐ mmHg	☐ hPa
☐ bar	☐ mH_2O		☐ kPa
	☐ ftH_2O		☐ MPa
☐ psi	☐ inH_2O	☐ kgf/cm^2	

Output Unit (Scaled unit)

Mass	Length	Volume	Volume	Percent
☐ kg	☐ m	☐ l	☐ gal	☐ %
☐ t	☐ dm	☐ hl	☐ Igal	
☐ lb	☐ cm			
	☐ mm	☐ m^3		
		☐ ft^3		
	☐ ft	☐ in^3		
	☐ inch			

Empty calibration [a]:
low pressure value (empty) _____ [pres.eng.unit]

Empty calibration [a]:
low level value (empty) _____ [scaled unit]

Full calibration [b]:
high pressure value (full) _____ [pres.eng.unit]

Full calibration [b]:
high level value (full) _____ [scaled unit]

Damping

Damping: _____ sec

Pressure

The following configuration data sheet has to be filled in and included with the order if the option "J: customized pressure" has been selected in feature "090: Calibration; unit" in the product structure.

Pressure Engineering Unit

☐ mbar	☐ mmH_2O	☐ mmHg	☐ Pa
☐ bar	☐ mH_2O		☐ kPa
	☐ ftH_2O		☐ MPa
☐ psi	☐ inH_2O	☐ kgf/cm^2	

Calibration Range / Output

Low range value (LRV) _____ [pressure engineering unit]
Upper range value (URV): _____ [pressure engineering unit]

Damping

Damping: _____ sec

Endress+Hauser SE+Co.
2340 Endress Place
Greenwood, In. 46143-9772

Final Inspection Report /Endprüfprotokoll

The manufacturer confirms that all measuring equipment used to assure the quality of the products has been calibrated and is traceable to national (e.g. DKD/DAkkS, NIST, NABL...) or international standards.

Der Hersteller bestätigt, dass die zu Qualitätsprüfungen des Erzeugnisses eingesetzten Messmittel gültig kalibriert waren und auf nationale (z.B. DKD/DAkkS, NIST, NABL...) bzw. internationale Normale rückführbar sind.

Waterpilot HART

TAG number	Messstellen-Nummer	
Order code	Bestellcode	FMX21-6FF0/0
Serial number	Seriennummer	NB00D915122
Extended order code	Erweiterter Bestellcode	FMX21-FE211HGE25A+PO
Sensor range	Sensor-Messbereich	0...400 inH2O
Adjusted measuring range	Eingestellter Messbereich	0...400 inH2O
Maximum permissible error	Max. zulässige Messabweichung	± 0.2 %
Output type	Ausgang	4-20 mA HART
Software version	Softwareversion	01.00
Output mode	Ausgangsmodus	linear

HAMPTON ROADS SANITATION DISTRICT HRSD

Customer order number	Auftragsnummer des Kunden	34884
E+H sales order number	E+H Auftragsnummer	3019367181000010
Internal order number	Interne Auftragsnummer	3003840583/0010
Ambient temperature	Umgebungs-Temperatur	22.2°C (± 1 °C)
Ambient humidity	Umgebungs-Luftfeuchte	27.9 %rel.F (± 10 %rel.F)
Ambient pressure	Umgebungs-Luftdruck	980.6 mbar (± 0.2 mbar)
Calibrated according to fix point method IEC 60770.	Prüfung nach Grenzpunktmethode gemäß IEC 60770.	

Measuring results / Messergebnisse

Calibration point	Nominal value ($p_{Ref.}$)	Measured value (digital readout)	Deviation (digital)	Nominal value (I_{Out} calculated)	Current output (analog)	Rel. deviation (analog)
Kalibrierpunkt	Sollwert ($p_{Ref.}$)	Istwert (Digitaler Wert)	Abweichung (digital)	Sollwert (I_{Out} berechnet)	Istwert Stromausgang (analog)	Rel. Abweichung (analog)
%	inH2O	inH2O	% of Span	mA	mA	%
0	0.00000	0.00040	0.00010	4.00000	3.99994	-0.00036
51	202.402	202.394	-0.00197	12.09608	12.09430	-0.01115
99	397.588	397.586	-0.00055	19.90352	19.90399	0.00295

Calibration orientation
Kalibrierlage

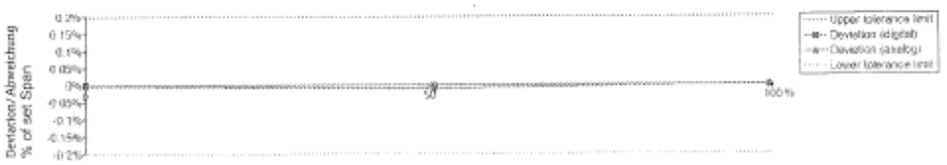

Calibration carried out in output mode linear/
Kalibration erfolgte im Ausgangsmodus linear.

Measuring point in % of adjusted measuring range/
Messpunkt in % vom eingestellten Messbereich

We confirm that all tests, according to the Quality Plan (QP), have been performed successfully. At the time of verification, the measuring points of the device indicated above were in compliance to the published valid technical specification (TI).

Wir bestätigen, dass alle Tests aus dem Qualitätsplan (QP) erfolgreich durchgeführt wurden. Das Gerät entsprach zum Zeitpunkt der Prüfung an den aufgeführten Messpunkten den gültigen technischen Spezifikationen (TI).

TI 431P

This document was generated electronically and is valid without signature.

Dieses Dokument wurde elektronisch erzeugt und ist ohne Unterschrift gültig.

Endress+Hauser
People for Process Automation

Date of inspection/ Prüfdatum 26. Nov 2018

71089244/250002797-G

- End of document -
- Ende des Dokumentes -

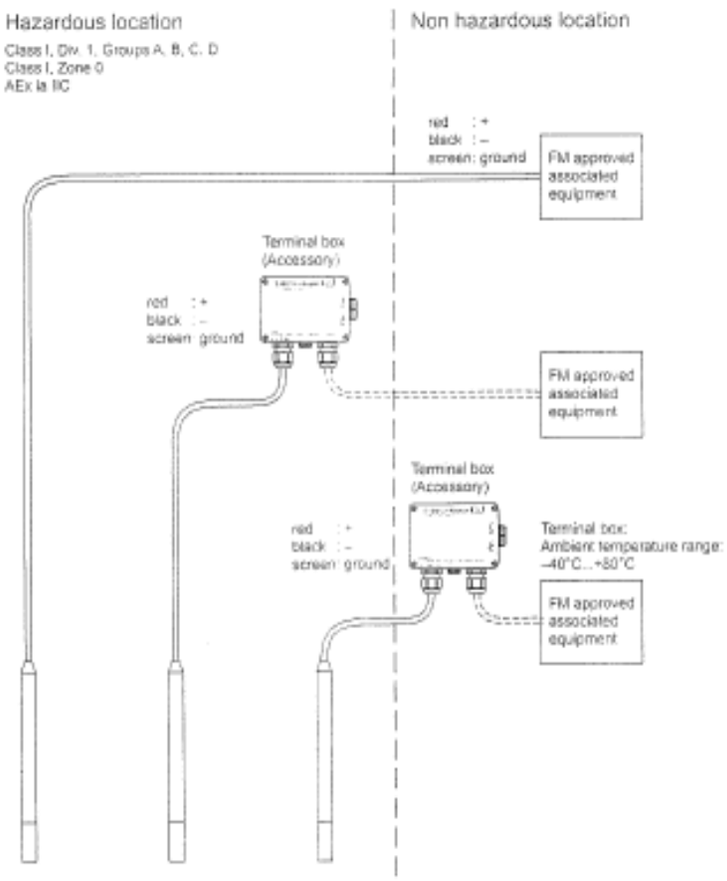

Intrinsically safe (entity), Class I, Div. 1, Groups A, B, C, D or Zone 0, IIC
Hazardous Location Installations

1. FM approved apparatus must be installed in accordance with manufacturer instructions.
2. Control room equipment must not use or generate over 250 V.
3. The installation must be in accordance with the National Electric Code ANSI / NFPA 70 and ANSI / ISA-RP 12.06.01.
4. Sensor entity parameters: Vmax = 30 V DC, Imax = 133 mA, Pmax = 1 W Ci and Li per following table:

Length of sensor cable	Ci (10.3 nF + 180 pF/m)	Li (1 µH/m)
5 m	11.3 nF	5 µH
10 m	12.2 nF	10 µH
20 m	14.0 nF	20 µH
30 m	15.8 nF	30 µH
50 m	19.4 nF	50 µH
100 m	28.4 nF	100 µH
200 m	46.4 nF	200 µH
300 m	64.4 nF	300 µH

6. FM approved associated equipment must meet following conditions:
   Voc or Vt ≤ Vmax; Isc or Io ≤ Imax; Po ≤ Pmax;
   Ca ≥ Ci + Ccable; La ≥ Li + Lcable.
   Install associated equipment in accordance with the manufacturer instructions.
7. Use supply wires suitable for 5°C above surrounding ambient.
8. Avoid friction and impact sparks. Anchor sensor if necessary, secure against swinging.
9. WARNING: Avoid electrostatic charging of plastic surfaces.
   Do not rub. Do not use in media or environments which may generate electrostatic charges on plastic surfaces.
10. WARNING: Substitution of components may impair intrinsic safety.
11. Do not remove or move terminal blocks, fastening elements or insulation plate of the terminal box. Do not build in additional components.
12. Connect cable screen to earth ground of the installation.

Sensor

Temperature class	Ambient temperature range
T4	–10°C ≤ Ta ≤ +70°C
T5	–10°C ≤ Ta ≤ +55°C
T6	–10°C ≤ Ta ≤ +40°C

Terminal box

Temperature class	Ambient temperature range
T6	–40°C ≤ Ta ≤ +80°C

Terminal box (Accessory):

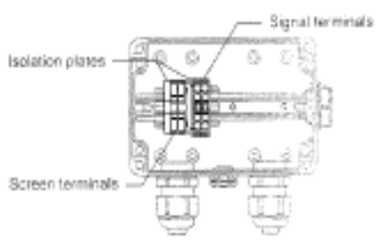

Click here to return to Strategic Automation Configuration (DCS))

XIII. **Exhibit R**

Hampton Roads Sanitation District
Strategic Automation Configuration Guide

Automation Standards

January 26, 2021

Introduction

Software, hardware, and network standards must be defined before any distributed control system (DCS) design effort can be undertaken. Such standards benefit the DCS development team by providing a consistent design and an organized implementation plan. This, in turn, benefits the final user in the form of an efficient DCS operation and maintenance environment. This document details the DCS automation standards for the Hampton Roads Sanitation District, and future projects.

This Automation Standards document is intended to be a living document, and as such, will be continuously updated. Changes will occur more frequently as new plants are added, and new types of control are defined.

This volume is ordered into sections which provide a broad-brush approach to standards, guidelines, and best practices. For each plant or pump station, a second volume will be developed, having additional tabbed sections containing standards that are unique to that specific plant or pump station.

Due to the necessity to restrict access to sensitive information about HRSD's network infrastructure, control details, database, etc., the original Automation Manual has been split into two sections. The first of which is intended to provide a detailed overview of the OVATION system and recommended practices, that would be of use to an Architect Engineer in understanding the OVATION system. The second manual mirrors the first in section numbers, etc. This manual contains details of the control systems' networking set up, program details, and protocols used. This second manual will be used for internal purposes only by HRSD to configure the system.

GUIDE
SPECIFICATION
SECTION 40 94 23
DISTRIBUTED CONTROL SUBSYSTEM (DCS)

PART 1 GENERAL

1.1 REFERENCES

A. The following is a list of standards which may be referenced in this section:

1. American National Standards Institute (ANSI): X3.5, Flow Charts Symbols and Usage.
2. Instrumentation, Systems, and Automation Society (ISA):
   a. S5.2, Binary Logic Diagrams for Process Operations.
   b. S5.4, Instrument Loop Diagrams.
   c. S5.5, Graphic Symbols for Process Displays.
3. National Electrical Manufacturers Association (NEMA): 250, Enclosures for Electrical Equipment (10,000 Volts Maximum).

1.2 SUMMARY

A. This section covers requirements for Distributed Control Subsystem (DCS) and is in addition to requirements in Section 40 90 10, Process Instrumentation and
Control Systems (PICS). Key technical definitions and requirements for DCS are given in Section 40 90 10, Process Instrumentation and Control Systems (PICS).

B. DCS functions include data acquisition, process control, historical data storage, text and graphical data display, alarming, data analysis, and report generation. Requirements listed, identify minimum acceptable system performance. Provide hardware and software features required to allow configuring of a fully operational system, with convenient operator interface and efficient equipment use.

****

****

C. DCS Overview: The complete Distributed Control System shall be the latest version of the Ovation System, manufactured and supplied by Emerson Process Management (EMR). The system shall include

the following components and features as shown on the DCS System

Block Diagram:

1. All DCS communications modules and cables shall be redundant.
2. All DCS power supplies shall be redundant.
3. Interface gateway to Allen-Bradley PLC SLC.
4. All DCS hardware shall be powered from "true on-line double conversion" type UPS units provided by the DCS supplier. All UPS units shall be monitored by the DCS for faults and low battery conditions. UPS units shall be located in communication cabinets in control room locations and in separate enclosures for RIO units.
5. All I/O modules shall be provided with field termination units with factory interconnect cable.
6. All DCS equipment shall be powered through shielded isolation transformers. Transformers and associated circuit breaker panels shall be sized and provided by DCS supplier.

D. Configuring of Applications Software shall be provided by EMR.

1.3 DEFINITIONS

A. Abbreviations:

1. As specified in Section 40 90 10, Process Instrumentation and Control Systems (PICS).
2. CPU: Central Processing Unit.
3. EMR: Emerson Process Management (DCS Supplier).
4. EWS: Engineering Workstation.
5. PMCS: Process Monitoring and Control Software.
6. LAN: Local Area Network.
7. DCU: Digital Control Unit.
8. PLC: Programmable Logic Controller.
9. RTU: Remote Terminal Unit.
10. ACC: Area Control Center.
11. CAD: Computer Aided Design.

B. Terms:

1. Circular Files: Files in which each latest record written to file replaces oldest record in file.
2. Log a Message: Print a message on an alarm/status printer.
3. OIS: Includes computer with standard operator station software, operator's keyboard, and CRT monitor.

C. Types of Variables:

1. Calculated Analog Points (CA): Analog variables computed from DCU inputs, manual inputs, calculated discrete points, and other calculated analog points.
2. Calculated Discrete Points (CD): Discrete variables computed from DCU inputs, manual inputs, calculated analog points, and other calculated discrete points.
3. Manual Inputs (MI): Variables whose values are manually entered, e.g., laboratory data.
4. Process Variables (PV): Analog variables from DCU analog inputs and calculated analog points.
5. Report Variables: Variables computed by report generator.

1.4 SUBMITTALS

A. Action Submittals:

1. DCS block diagram and overview description.
2. Bill of Materials:
   a. Breakdown to level of individual plug in modules.
   b. Information: Name of part, manufacturer, model number, options included, and quantity. Organize by ACC, and within ACC organize by enclosure and component (for example, DCU, EWS, OIS).
3. Room Layout Drawings: For each ACC, show to scale enclosure, furniture, DCS equipment, and service area requirements.
4. Power Connection Diagram: For DCS equipment, show interconnection from power sources through uninterruptible power supplies and power distribution panels to DCS equipment.
5. Grounding Diagram: For DCS equipment, show grounding philosophy and implementation.
6. Interconnecting Wiring and Cabling Diagrams: For DCS equipment, identify terminal receptacles, cable ID tags, actual cable lengths, and maximum distance limitations between cabinets or components.
7. Component Submittal: For each DCS component:
   a. General data and description.
   b. Engineering Specifications and data sheets.
   c. Scaled drawings and mounting arrangements.
   d. Equipment weights.
   e. Power and grounding requirements.
   f. External electrical interconnection and interface definitions.
8. Shop Drawings for Specifically Assembled DCS Equipment:
   a. A complete connection diagram.
   b. Data sheets on each major item, annotated as necessary to describe specific items furnished.
   c. Scaled Layout and Fabrication Drawings:
      1) Cable access areas and cable routing.
      2) Power termination and ground lug location.
      3) Data cable termination points.
      4) Field signal termination points.
      5) Anchor bolt size and location.
   d. Installation and mounting detail drawings.
   e. Equipment weights.

9. Input/Output (I/O) Point List for All I/O Points: Information in the list shall include all items shown on the I/O lists in these documents and the following information where applicable:
   a. Point names and descriptions.
   b. Point addresses, tag numbers, functions, ranges, and engineering units.
   c. Wire and cable assignments.
   d. DCU card layout, module and block number.
   e. Field wiring termination assignments.
10. Power Consumption and Heat Dissipation Summary for DCS Equipment: Voltages, current, phase(s), and maximum heat dissipations in Btu/hr.

B. Software Shop Drawings:

1. System Software Documentation: Complete reference information for system users. Detailed descriptions including features, limitations, and use of System Software.
   a. Operating System and Utilities:
      1) Base Documentation: For day-to-day users of tasks, including editing files and using command procedures.
      2) General User Documentation:
         a) Using files, directories, command language, and text editors.
         b) Alphabetic list of errors, warning and informational messages including explanation and response required.
      3) System Manager Documentation:
         a) Setting up systems.
         b) Maintaining system and files.
         c) Optimizing performance.
         d) Networking features.
      4) Programming Documentation:
         a) Linking, loading, running, and debugging tasks.
         b) Screen management.
         c) Librarian and file management.
         d) Device support and device drivers.
   a. Programming Language. Syntax, execution, use and reference capabilities.
   b. Online and Offline Diagnostics: How they are used, and various execution options available.
   c. Communications with DCS and PLC equipment. Describe configuration, operation, limitations, and diagnostics for LANs, data highway, serial links, and other communication

paths. Provide sufficient documentation to allow third parties to

troubleshoot communications problems with devices connected to DCS.

2. PMCS Documentation: Detailed technical reference manuals and user level manuals.
   a. Types of Manuals:
      1) System Manager Documentation:
         a) Initial system setup.
         b) Data base and file structures.
         c) Communication with field devices.
         d) Maintaining system and files.
         e) Troubleshooting system problems.
         f) Optimizing performance.
      2) System Engineer Documentation:
         a) Configuring applications software.
         b) Documenting applications software.
      3) Operator Documentation: Using the PMCS with configured applications software.
   b. PMCS Functions Covered:
      1) Process data base.
      2) Communication with field devices.
      3) Calculated analog points and calculated discrete points.
      4) Input processing.
      5) Message logging.
      6) DCS diagnostic alarms.
      7) Alarm handling.
      8) Control processor.
      9) Restart program.
      10) Man-machine interface-general functions.
      11) Graphics display generator.
      12) Types of displays.
      13) Alarm/status log history.
      14) Historical data collection.
      15) Data retrieval.
      16) Trending.
      17) Report generator.

C. Informational Submittals:

1. Testing related Submittals.
2. O&M Manuals-Hardware:
   a. Updated version of hardware Shop Drawings.
   b. Component Manufacturers' O&M Manuals: Instructions for installation, operation, maintenance, troubleshooting,

and calibration.

c. Bill of materials for parts. Separate list of installed parts from lists for spare parts and expendables provided.

d. List of additional spare parts recommended.

3. Reproducible Hardware Drawings:

a. DCS block diagram.

b. Power and grounding interconnection diagrams.

c. Interconnection wiring and cabling diagrams.

4. O&M Manuals-Software Documentation:

a. Updated version of software Shop Drawings described under Article Submittals.

b. For system software that is not a product of the DCS manufacturer, include manufacturer's original disks and manuals with hardware shipments.

1.5 ENVIRONMENTAL REQUIREMENTS

A. Control Room: NEMA 1.

B. Other Locations: As noted.

1.06 SEQUENCING AND SCHEDULING

A. Refer to Section 40 90 10, Process Instrumentation and Control Systems (PICS).

1.7 MAINTENANCE

A. Maintenance Service Agreement: Services provided following system acceptance.

1. Service Agreement:
   a. Duration: 2 years.
   b. Demand Maintenance: As requested by Owner.
   c. Manufacturer's recommended preventive maintenance, checking system error counters, and installing required engineering changes.
   d. Remote Monitoring and Diagnostic Service: Direct telephone line link between DCS and DCS manufacturer's maintenance center. Service supports connection of DCS to remote equipment at DCS manufacturer's service center, which can be used to diagnose hardware and software problems with all DCS equipment.
2. Telephone Support Service:
   a. Duration: 2 years.
   b. Available during normal business week.
   c. Provided by persons thoroughly familiar with DCS supplied.
3. Software Update Service:
   a. Duration: 4 years.
   b. Coverage: Standard software, including both system software and PMCS.
   c. Include new software versions, documentation updates, newsletters, user notes, software performance reports, interim software updates, revisions, releases, and fixes, etc.

1.8 EXTRA MATERIALS

A. Spare Parts:

1. When computing percentages for spare parts, round up fractions to nearest whole number.
   a. Modules and Power Supplies: For all DCS equipment except printers, and personal computer portion of engineering workstations and OISs:
      1) 2 of each size and type of power supply used.
      2) 1 of each type of electronic circuit board or electronic module used, except for process I/O modules.
      3) 2 of each type of process I/O module required to handle the points shown in I/O lists in Supplements at end of

this section.

b. Engineering Workstation: One.

c. Fuses: 20 percent, but no less than 10 of each type and current rating used.

PART 2 PRODUCTS

2.1 SYSTEM PERFORMANCE

A. Availability: 99.999 percent minimum.

B. Capacity:

1. Provide DCS with sufficient capacity to handle specified equipment and functions required by Contract Documents and equipment listed under paragraph Future Components, and still have specified spare capacity. Except for software configuring, implementing listed future components shall not require addition of DCS hardware or software to the DCS equipment supplied under this contract, other than the listed future components.
2. For example, provide I/O racks, power supplies, processor capacity and inter-rack cables in each DCU supplied under this contract, for DCU future I/O.
3. *Refer to following items as an indication of complexity of applications software that DCS will be required to support:*
   a. Drawings: Process and Instrumentation Diagrams.
   b. Section 40 90 10, Process Instrumentation and Control Systems (PICS): Supplements, Functional Descriptions, DCS Special Functions.
   c. Input/Outputs List in Supplements at end of this section.
4. Capacity refers to required physical size, storage capacity, and processing throughput of DCS hardware and software. DCS changes required to implement listed future components shall be limited to "configuring" data base tables and system parameters to allow system to recognize the additional equipment.

C. Response Times:

1. Basis for Response Times:
   a. All DCUs and OISs are in operation.
   b. Each EWS and OIS has been configured with 5,000 tags.
   c. Spare slots in DCUs have been used to implement I/O points in table under paragraph DCU Spare Plug-In Slots, under Article Spare Parts.
   d. Process graphic displays have 20 active points minimum, and points distributed between DCUs.

2. OIS Response Time: Number of seconds from when an operator requests a new OIS display until that display is fully presented on screen with active data displayed. For each type of display, table lists maximum allowable times in seconds for:
   a. Average: Average time to call up display.
   b. Worst: Worst case call up time.
   c. Refresh: Rate at which data on display is updated.

Display Type	Average	Worst	Refresh
Group Display	1.0	2.0	1.0
Process displays	2.0	2.0	1.0
Alarm summary	1.0	1.0	1.0
Historical trends, four process variables minimum			
30 minutes	1.0	1.0	--
1 hour	2.0	2.0	--
8 hours	2.0	2.0	--
1 day (24 hours)	3.0	3.0	--

Display Type	Average	Worst	Refresh
1 week (7 days)	5.0	5.0	--
30 days	10.0	10.0	

3. Viewing Input Changes:
   a. Given following conditions:
      1) Operator is viewing a process graphic display.
      2) A displayed point's field input to a DCU changes its value.
   b. Time From Field Input Change Until New Value Appears on Process Graphic Display: 2 seconds, maximum.
4. End-to-End Response Time for DCUs:
   a. Given following conditions:
      1) Operator is viewing a process graphic display.
      2) Operator gives command through OIS to change status of DCU discrete output point from ON to OFF.
      3) At DCU discrete output point is wired back into a

discrete input point.

4) Discrete input is displayed on process graphic display being viewed.

b. Time from operator command to change discrete output until new value of discrete input appears on graphic display: 3 seconds, maximum.

5. End-to-End Response Time for PLCs:

a. Conditions: Same as for end-to-end timing for DCUs.

b. Time From Operator Command to Change Discrete Output Until New Value of Discrete Input Appears on Graphic Display:

15 seconds, maximum.

D. DCU Input Scan Rate:

1. Analog Inputs: 2 seconds, maximum.
2. Discrete Inputs: 1 second, maximum.

E. Redundancy and Reliability:

1. No single failure of any DCS equipment, including data highway or power supplies, shall cause loss of any functions except as noted for failure of the following items.

a. DCU with Redundant Processors: No loss of function.

b. Any OIS: Loss of function limited to use of that OIS.

c. Any Engineering Workstation: Loss of function limited to use of that engineering workstation.

d. Any Process I/O Card: Limited to loss of functions dependent on signals from/to that card.

2. Provide means to manually switch functions of failed OISs to another unit.

2.2 SYSTEM SOFTWARE

A. Operating System: General purpose, multiuser, multiprocessing operating system:

1. Multiprocessing support for simultaneous execution of process monitoring, and control software tasks, and system support tasks.
2. Batch processing operating under control of command files.
3. Priority task scheduler with provisions for job initiation on time of day, elapsed time, hardware interrupt, process event, request from another task, or operator request.

4. Schedule I/O operations on a priority basis with all I/O carried out concurrently with program execution.
5. Device independent input/output system using online reassignable logical unit numbers for peripheral devices and file names for disk and tape files.
6. Ability to delete, replace, or add process control task or system support while online.
7. Multilevel password protection scheme to control access to different system support tasks and disk-based data structures.
8. Systems Generation: Allow configuring of an operating system to meet specific requirements of hardware and software configuration.
9. All software on system should have the appropriate number of licenses for the hardware the system was shipped with.
10. Licensing for the Historical points on the Historian (Drop 160) should be 50% greater than when the system is shipped for future expansion purposes.

B. Programming Languages: Provide compilers each programming language used by DCS.

C. Utilities:

1. File Management: General-purpose file system supporting dynamic creation, extension, and deletion of disk files from source programs, object programs, and data files.
2. Network Communications: General-purpose network communications software to support local area network connection between DCS central processing units and with personal computers. Allows for exchange of disk files between computer systems.
3. Debugging Aids: Online and offline debugging aids for high and low level language environments.
4. Disk Backup and Reload: Operator-initiated utility for maintaining backup copy using the latest technology.

D. Diagnostics:

1. Online Diagnostics: Complete system of diagnostic software to monitor, isolate, identify, tabulate, and alarm system hardware malfunctions and software failures.

E. Additional Software Tools: For each OWS provide current versions of manufacturer's standard software tools.

F. Transportable Applications: While applications software is being developed and tested offsite, each OIS, EWS, and DCU may be temporarily substituted for a similar unit. For example, applications software for EWSs, DCUs, and OISs for one ACC may be developed and tested using equipment for a different ACC. Allow applications software for one unit to be transported to other units of same type. Provide software, software licenses, and hardware needed to support this type of transporting and substitution, whether or not these software, software licenses or hardware will actually be used in final configuration.

G. Capacity to Handle Software Upgrades: Provide DCS hardware able to adequately run major software upgrades introduced by DCS manufacturer the life of DCS product line.

2.3 PROCESS MONITORING AND CONTROL SOFTWARE (PMCS)

A. Types of PMCS Software:

1. Control: Executes on DCUs.
2. Monitoring and Supervisory Control of DCUs: Executes on OISs and EWS.
3. Configuring of Applications Software: Executes on EWS and OIS. Includes utilities and configuring aids in either online or offline modes.
4. Communications: Executes on DCUs, OISs, and EWS.

B. Types of Displays:

1. Index Displays: Alphanumeric display with major and minor indexes that identify access to all subsequent displays.
2. Overview Displays: Alphanumeric displays that show a summary of the group and process graphic displays. Includes the display names and descriptions.
3. Group Displays:
   a. Detailed information on a number of analog control loops, analog indications, discrete sequencing functions, and discrete status indicators, in any configurable combination.
   b. Groups of analog controller and indicator displays. "Faceplate" type displays having all the operator interface features normally provided by conventional electronic analog controllers and indicators. These features include display of ranges, units, pacing constants, AUTO/MANUAL status, tag numbers, service descriptions, bar graph representation and numeric values of process variables, outputs, and set

points.

c. Discrete sequence step indications, time value indications, AUTO/MANUAL mode indications, tag numbers, and service descriptions.

d. Discrete status indications including ON/OFF status of discrete inputs and outputs, AUTO/MANUAL status of discrete outputs, software selector switch position indications, tag numbers, service descriptions, Boolean, integer, real, and string parameter values.

e. Detail Displays: Configuration parameters associated with an individual loop or process 1/0 point, such as, controller tuning constants, timer values, scaling constants, alarm settings, etc.

4. Trend Displays: Provide functions described under paragraph Trending.

5. Alarm Summary Display: Shows all existing alarms and unacknowledged alarms. Refer to paragraph Alarm Handling.

a. Display format similar to messages logged on alarm/status printer.

b. Retains last 1,000 alarms, minimum.

c. Include time of day at which alarm was detected.

d. Alarms grouped by priority, highest priority first.

e. Within priority groupings, alarms listed in reverse chronological order.

f. Unacknowledged alarm messages shall be displayed in reverse video.

g. Single-key acknowledgement of all alarms shown on a currently displayed page of alarm summary display.

6. Process Graphic Displays: Configurable.

a. Display Objects:

1) Process Flow streams: Labeled and color coded.

2) Process Structures: Basins, tanks, wet wells, channels, etc.

3) Major Equipment Items: Pumps, blowers, drives, compressors, etc.

4) Major Control Devices: Gates, valves, etc.

5) Instruments.

6) Targets to allow quick access associated process graphic displays.

7. Diagnostic Displays:

a. DCS Diagnostic Display: Graphic display showing operational status of DCS, including data highway and OIS.

C. Historical Data Collection Files:

1. Periodically save designated variables for trending, report generation, and historical records. Allow any process variable to be selected for saving in data collection files.
2. Data Entry for Manual Inputs:
   a. Direct entry into historical files of data values for manual input variables.
   b. Data entered through menus based on configurable groups of related manual inputs.
3. Disk Files:
   a. High Resolution Data:
      1) Sample Interval: Adjustable from 1 second to 15 minutes.
      2) Period Covered: Multiple day, adjustable.
      3) Content: Time of day, date, and values of designated process variable. Value saved may be either instantaneous value or average over sample interval.
   b. Hourly Data:
      1) Sample Interval: 1 hour.
      2) Period Covered: Multiple day, adjustable.
      3) Content: Time of day, date, average, maximum, minimum, and totalized hourly values of designated process variables.
   c. Daily Data:
      1) Sample Interval: 1 day.
      2) Period Covered: Multiple day, adjustable.
      3) Content:
         a) For Designated Process Variable:
            (1) Daily minimum and maximum values.
            (2) Time occurrence of daily minimum and maximum values.
            (3) Average daily value.
            (4) Daily total (for flow and other rate type variables).
         b) End of day values for designated run time counters and cycle counters.
         c) Daily values for designated report variables and manual inputs.
      1) In case DCS is down at midnight, allow manual initiation of this file update at a later time.
3. Historical Archive File: Maintains permanent record of data saved in daily data disk file. On command, copy 1 month of data from daily

   data disk file to historical archive tape file. Provide operator selectable commands for both manual initiation and automatic

timed initiation of this archival operation. Copy operation does not alter disk files. Disk data continues to be available for data retrieval functions.

D. Trending:

1. General Features:
   a. Trending is a special case of previously specified Data Retrieval function.
   b. Simultaneous trending of different sets of variables on different trend output devices.
   c. OIS Trend Resolution: Pixel level.
   d. Variables Per Trend: User selectable, one to four minimum, all displayed in same trend window.
2. Trend Types:
   a. Real-Time: Continuous plotting of variables as a function of time.
      1) Plottable Variables: Any process variable, report variables, discrete variable, and manual input defined in process data base.
      2) Minimum Plot Sample Interval: Same as scan rate.
   b. Historical: Plotting any variables from Historical Data Collection files as a function of time.
3. Retrieval Parameters: Specific variables, data types, retrieval period, sample interval, process variable scales, and output device. Refer to paragraph Data Retrieval.
4. Process Variable Scales:
   a. Independent selection for each variable of low scale and high scale values in engineering units of process variable axis. For example, if scales for variables A and B are 0.00 to 1.00 and 100 to 200 respectively, and if A=0.50 and B=l 50, both A and B would plot
      at exactly the same point (the mid-point of process variable axis).
   b. Display individual, engineering units' scales for each variable being trended.
   c. Readout Cursor: Adjustable by user over range of time scale. Values are displayed in engineering units of each trended variable intersected by readout cursor.
   d. Point Descriptions: Tag number and description are shown for each trended variable.
4. Trend Groups: Aid requesting of frequently used trends. Each Trend Group contains all data retrieval parameters needed to specify trend display for up to four variables.
   a. Provide a minimum of 10 trend groups.
   b. Allow operator to create custom trend groups as desired.

E. Utility Programs: Software that helps in the configuring of applications, including but not limited to database format translations (to and from dBase, EXCEL), checking and verification of control configuration, configured blocks, and display configuration.

H. PMCS Manufacturer: EMR.

2.4 DCS COMMUNICATIONS

A. General: High speed masterless communication system linking all DCS stations as shown on DCS block diagrams in the Drawings. DCS stations are defined as DCUs, OISs, EWSs, printers, and gateway modules.

B. DCU Data Highway Performance:

1. Communication Speed: 100 Mbps, minimum.
2. Operating Length: 5,000 feet, minimum.
3. Stations Supported per Highway: 100, minimum.

C. Redundancy and Reliability:

1. Communications system fully redundant; no single failure of communications component results in loss of communications to any DCS station.
2. Redundant Components: Including, but not limited to, communications controllers, modems, power supplies, data highway cables, and cable connectors.
3. Redundant data highway cable lengths: Different cable lengths (paths) for each highway cable shall not affect operation.
4. Automatic detection of communications system component failure.
5. Automatic switchover from failed communications system component to backup component without any interruptions to normal operations. Alarm switchover and identify failed component in alarm message.
6. Communication system not affected by connection, disconnection, and failure of DCS stations.

D Peer-to-Peer Communications: Direct communication over data highway between DCUs. Allows DCUs to exchange data base values. Communication not dependent on OISs or EWSs. Allow at least 10 percent of any DCS database values to be exchanged with other DCUs on a regular basis without degrading system performance.

C. Applications Software Transfers: For stations connected to communications system:

1. *Download control logic from EWSs to DCUs.*
2. Upload control logic from database server.

3. Download monitoring and display configurations from EWSs to OISs and other EWSs.
4. Upload monitoring and display configurations from database server.

D. DCS/PLC Communications:

1. Periodically read all discrete and analog inputs and outputs for each PLC.
2. On demand, read from and write to internal PLC registers including individual timers, counters, timer/counter preset values, control loop set points, high/low limits, computed variables, control loop tuning constants, status indicators, and sequence START/STOP commands.
3. DCS Capacity to Read and Write PLC Data: DCS able to read all PLC inputs and write all PLC outputs at least once every 15 seconds.

2.5 HARDWARE-GENERAL

A. DCS Block Diagram: Refer to control system functional block diagram in Drawings. Interconnecting lines shown on block diagram imply information flow and not necessarily wiring.

B. DCS Manufacturer: Emerson Process Management (EPM); Ovation System, latest version.

C. Control Room Layout: Refer to Drawings.

D. Equipment Mounting: Unless otherwise noted, mount all DCS components in NEMA rated cabinets.

E. Color: Manufacturer's standard.

F. Cables Required:

1. For interconnection between all DCS components, except where leased telephone lines are shown.
2. Fiber Optics Cables: As shown on Drawings, for interconnection between DCS components.
3. Data Highway and Local Area Network:
   a. Media: Fiber optics, coaxial, meeting DCS manufacturer's specifications.
4. Cables Under 50 Feet in Length: Prefabricated with connectors and factory tested with DCS.
5. Furnish and install communications cables.

G. Special signal conditioning/repeating equipment as required for proper operation of DCS.

H. Isolation Transformers: Provide for all DCS equipment to protect DCS from damage by electrical transients induced in cables by lighting discharges or electrical equipment.

I. . Power to DCS Equipment:

1. From isolation transformers and uninterruptible power supply (UPS) units provided under this section.
2. Supplied from dual feed circuits.
3. Provide circuit breaker panelboard at each DCU and RIO location.

J. Power Failure Detection and AUTO Restart:

1. Prevents errors due to power failure or short-term power fluctuations that occur when UPS is not operating.
2. Power Failure: Voltage variations more than plus or minus 10 percent of normal for a duration of 0.5 second or longer. Causes DCS equipment to automatically shut down as required to prevent introducing errors on disk.
3. Short-Term Power Fluctuations: Voltage variations more than plus or minus 10 percent of normal for durations of 0.5 second to 1 millisecond. DCS shuts down as above or is buffered to prevent fluctuations from causing errors.
4. DCS executes restart program and return to normal operation when power is restored. Battery backed-up real-time clock used by DCS during automatic restart to set time and date.

J. I/O Lists:

1. DCU Input/Output List: Covers I/O points directly connected to DCS process I/O modules.

****

XII. **********

a. POINT TAG (OLD): Existing point tag in the old PLC based control system.
b. POINT TAG (NEW): New point tag to be used in the DCS software. This tagging system must follow the new HRSD standards. If new tag is not given, create tag in accordance with standards.
c. POINT DESCRIPTION: Point name to be used in the DCS software.
d. DCU/RIO: DCU or RIO number where point is to be terminated.
e. UP: Unit Process that the point is associated with.
f. DI: Discrete input signal, 24V dc.
g. DO: Discrete output signal, 24V dc.
h. AI: Analog input signal, 24V dc, 4 to 20 mA dc current signal.
i. AO: Analog output signal, 24V dc, 4 to 20 mA dc current signal. May be powered: from DCS or from field power supply.
j. TC: Thermocouple input signal, type K unless otherwise indicated.
k. SET (Contact Closed): Condition when the input device is closed or energized.
l. RESET (Contact Opened): Condition when the input device is not closed or energized.

m. SENSOR RANGE (Signal Range): Analog sensor and/or signal range.

n. AI POWER (DCS/FIELD): For analog inputs only, indicates loop power from either the DCS cabinet (DCU or RIO) or from a field power supply. FIELD also applies to typical 4 wire devices such as magnetic flow meters which do not need a powered 4 to
20 mA dc loop. If not indicated default is FIELD.

o. TERMINAL NO.: First terminal number in interface cabinet, field panel or other interface point. This will generally be the positive terminal.

p. TERMINAL NO.: Second terminal number in interface cabinet, field panel or other interface point. This will generally be the negative or common terminal if

q. TERMINAL NO. SHIELD: Terminal number for cable shield when needed with shielded cables.

r. REFERENCE DRAWING: Number or designation of the existing equipment drawing where interface terminals are shown.

s. P&ID: Process and Instrumentation Drawing where the equipment and signals are shown.

t. TOT: Total number of required active I/O points for each DCU or RIO unit. This includes DI, DO, AI, AO and TC signals.

u. COMMENTS: Any additional pertinent or clarifying information that may be included for reference or general information.

L. DCS Component: Provide all components required for a complete operational DCS system.

M. DCU and RIO Enclosures:

1. Number of standard cabinets as required for each DCU or RIO.
2. HRSD prefers back-to-back style cabinets with modules in front and corresponding termination units in back. If this cannot be accommodated due to limited floor space, then side by side cabinets will be acceptable.
3. Doors: Hinged doors for front and back access.
4. DCU/RIO Enclosure (Front half cabinet):
   a. DCU modules mounted in front.
   b. No field cables brought into cabinet.
   c. Sufficient rack space to accommodate specified future input/outputs, and associated power supplies, processors, communications and interface modules.
5. DCU/RIO Interface Cabinet (Rear half or side cabinet):

a. All field terminations in cabinet.
b. Houses all interface relays, timers, distribution breakers, fuses and miscellaneous items.
c. Cabinet divided by 11-gauge, minimum, mounting panel allowing equipment to be mounted both sides of panel.
d. Sufficient space in cabinets for terminations of specified spare I/O points and associated interface relays, timers, distribution breakers, fuses and miscellaneous items.

6. Typical Wiring Schematic: See Drawings.
7. DCU Spare Plug-In Slots: For each DCU/RIO, provide sufficient spare space in wired module cages plus sufficient terminals, power supplies, interfacing relays, and cabling to permit future addition of process I/O modules to bring total I/O point counts to those shown in following table. Numbers in parenthesis are remote I/O. Figures in table include required spares.
8. HRSD prefers Top Hat Enclosures on top of DCU/RIO's so conduits can penetrate it instead of DCU/RIO's. Inside of Top Hat enclosures two 4 inch knockouts can be made one for analog wiring and one for digital wiring. These knockouts should be centered in between the terminal connections.

2.6 HARDWARE-DCS COMPONENT LIST

A. Distributed Control Unit: Provide sufficient control processors, but no fewer than the number listed, for each DCU such that each control processor shall have 50 percent spare capacity when control functions have been configured.

B. Process Input/Output Modules:

1. I/O List: Provide sufficient I/O modules to handle the points shown in the I/O lists in Supplements at end of this section.
2. Spares: Refer to Article Spare Parts for additional requirements.
3. Remote I/O Modules: Mount all remote I/O modules within a given ACC in a cabinet that is separate from the DCU cabinet for that ACC.

C. Operator Interface Station: Manufacturer's standard with one or two monitors as shown.

D. Engineering Workstation: Manufacturer's standard.

E. Historical Data Processor: Provide one of the following options for historical data collection, archival, and retrieval:

1. Historical functions implemented by OISs. To provide redundancy, multiple OISs simultaneously handle these functions.
2. Historical functions implemented through dedicated historical processors. For redundancy, provide a minimum of two such processors.

F. Gateway Modules for Interface with Non-DCS Equipment:

****

XIII. **********

1. PLCs: Allen-Bradley, Modicon, GE.
2. Where possible, use Modbus over Ethernet protocol.
3. Except with Allen Bradley PLC. Use native protocol.

7. HARDWARE-FURNITURE

****

XIV. **********

A. Control Room Console:

1. Provide 3-position console.
2. Integrated multiple bay enclosures suitable for sit down operation. House OISs, EWSs, printers, communications processors, data highway communications equipment, and power supplies.
3. Units made of high impact, durable plastic top. Desktops capable of supporting 400 pounds, minimum, on extended surfaces. Bushed holes for power and signal cables to devices located on desktop. Edges of desktops beveled or rounded. Forms feed slots in desktops for printer paper. Cupboards below printers with shelves to hold feed paper.
4. Operator Station Layouts: Provide layouts for each operator station as shown on drawings and listed below. Bays are listed from left to right as **operator views console.**
   a. Types of Bays: Following abbreviations are used to identify required bays:
      1) OIS or EWS.
      2) Printer: Console printer surface.
      3) Work: Console work surface.
      4) Wedge: Console wedge section.
5. Colors: As selected by Owner.
6. Manufacturer and Product: Evans; Series 200, or equal.

B. Chairs:

****

XV. **********

1. Quantity: 8.
2. Type: Mid-back desk chair with five-arm base, T-arms, back height adjustment, back angle adjustment, seat angle adjustment, arm height

   adjustment, pneumatic height adjustment, and electrostatic discharge (ESD) option.
3. Castors:
   a. ESD soft, dual-wheel for use on hard floors.
   b. ESD hard-composition, dual-wheel for use on carpet.
4. Finish: Approved by chair manufacturer for use with ESD option. Custom color selected by Owner.
5. Manufacturer: Steelcase Inc. Criterion series 453-5500.

2.8 HARDWARE COMPONENT SPECIFICATIONS

A. Distributed Control Unit (DCU):

1. Independent units completely fabricated, with components installed and wired at factory.
2. Implement control logic (applications software) configured through the EWS.
3. Capable of continuing to execute control logic to maintain control over process even if all other stations are down and data highways are nonfunctional.
4. Primary Components:
   a. Control processors (redundant).
   b. I/O modules.
   c. Redundant data highway communications processors.
   d. Power supplies.
5. Control Processors:
   a. Execute control logic compiled by EWS.
   b. Communicate with I/O modules, data highway, other control processors and PLCs.
6. Redundant Control Processors:
   a. Required for all units.
   b. Both control processors receive and process information simultaneously. Faults detected by processors themselves without the need for data highway to be available. When fault is detected, non-defective processor assumes control without affecting normal operation.

c. Allow online configuration of control processors without interruption to process control functions.

7. Power Supplies:
   a. No interruption of operation due to single failure of any power supply.
   b. Capable of providing 24V dc power from DCU to field instruments.

8. Transportable Applications: Applications software developed offline on EWS can be downloaded to control processors. Control processors can

   emulate one another and applications software developed and debugged on one control processor can be saved, and later downloaded to a different control processor without additional modification.

B. Process Input/Output Modules:

1. Common Requirements:
   a. Surge Withstand Capability: ANSI/IEEE C37.90A.
   b. Discrete Output Fuses: Points individually fused either on I/O module or in field termination unit.
   c. Each I/O module shall be replaceable without disturbing the field

      I/O wiring connected to it.
   d. Provide a separate field termination unit and factory interconnect cable for each I/O module.

1. Analog Inputs (Isolated 4 to 20 mA dc):
   a. Type: Isolated 4 to 20 mA dc signals conforming to ISA S50.l.
   b. Input Range: 4 to 20 mA dc, minimum.
   c. Accuracy: Plus, or minus 0.1 percent of span.
   d. Resolution: 12 bits, minimum.
   e. Transmitter Power: 24V dc at 20 mA.
   f. Isolation: 300V minimum between points.
   g. Common Mode Rejection: 90 dB, minimum.
   h. Normal Mode Rejection: 33 dB, minimum, for frequencies of 60-Hz and above.
   i. Analog-to-Digital Converter: No more than eight inputs per converter.

3. Analog Outputs (Isolated 4 to 20 mA dc):
   a. Type: Isolated 4 to 20 mA dc signals conforming to ISA S50.l.
   b. Accuracy: Plus or minus 0.1 percent of span.
   c. Resolution: 12 bits, minimum.
   d. Isolation: 300V minimum between points.

4. Discrete Inputs (Contact Sense 24V dc):
   a. Type: 24V dc supplied by DCU impressed on external contacts

to sense their OPEN/CLOSE status.

b. Isolation: 300V minimum between points.

c. Maximum Current for Turn On: 3 mA.

d. LED ON/OFF status indicators for each point.

5. Discrete Outputs (Voltage Output 24V dc):

a. Type: DCU supplies 24V dc to operate relays in external control panels.

b. Isolation: 300V minimum between all output points.

c. Maximum Load Current: 2 amps.

d. LED ON/OFF status indicator for each point.

C. Uninterruptible Power Supplies (UPS): Manufacturer's standard continuous on-line type sized for a minimum of 30 minutes operation at full load conditions.

D. Isolation Transformers: Manufacturer's standard.

E. Circuit Breaker Panels: Manufacturer's standard.

2.9 SOURCE QUALITY CONTROL

A. Factory Demonstration Tests:

1. Scope: For all DCS equipment. See Section 40 90 10, Process Instrumentation and Control Systems (PICS).

2. Location: DCS manufacturer's factory.

3. Loop Specific Functions: See Section 40 90 10, Process Instrumentation and Control Systems (PICS).

4. Non-Loop Specific Functions:

a. Input/output point generation and point processing.

b. Control strategy generation.

c. Message logging and alarm handling.

d. Process control display generation and configuration.

e. OIS displays and user entries.

f. Power up, startup, and system restart.

g. Printing/plotting functions.

h. Failure mode and backup procedures including power failure, auto restart, and disk backup, and reload.

i. Data base configuration and use.

j. Historical data collection and retrieval.

k. Creation of a typical report and production of specified reports.

PART 3 **EXECUTION**

3.1 FIELD QUALITY CONTROL

A. Operational Readiness Test: Refer to Section 40 90 10,

Process Instrumentation and Control Systems (PICS).

B. Performance Acceptance Test: Include the same types of testing that are specified for factory demonstration test.

3.2 MANUFACTURER'S SERVICES

A. General: Provide experienced personnel and management in field (Staging Site, and Plant Site) to coordinate and complete: installation, termination, adjustment, testing, training, and startup assistance.

B. Startup and Testing Team: Provide onsite, a team of at least two persons experienced in DCS systems engineering, hardware maintenance, and software configuring during the total period required to:

1. Check the installation, termination, and adjustment of all subsystems and their components.
2. Perform and complete onsite tests.
3. Provide startup assistance.

3.5 SUPPLEMENTS

A. Supplements listed below follow "End of Section," are a part of this Specification.

1. DCS Equipment Schedule.
2. DCS Input/Output List, included with Contract Drawings.

END OF SECTION

Hampton Roads Sanitation District Strategic Automation Configuration Guide

Software and HMI Standards

January 8, 2015

1 Introduction

Software, Hardware and Network standards must be defined before any Distributed Control System (DCS) design effort can be undertaken. Such standards benefit the DCS development team by providing a consistent design and an organized implementation plan. This, in turn, benefits the final user in the form of an efficient DCS operation and maintenance environment. This document details the DCS automation standards for the Hampton Roads Sanitation District projects.

This Automation Standards document is intended to be a living document, and as such, will be continuously updated. Changes will occur more frequently as new plants are added, and new types of control are defined.

This Volume is ordered into sections which provide a broad brush approach to standards, guidelines and best practices. For each plant or pump station, a second Volume will be developed, having additional tabbed sections containing standards that are unique to that specific plant or pump station.

2 Database

The Input/Output (I/O) database is the most important information required for a DCS project. Not only does it assist in the definition of control strategies and custom graphics, but it also provides point details that almost every standard software package on the DCS system uses. A successful DCS project starts with an I/O database that is 100% complete and accurate in both functional definition and record field content.

The following three sections define the core database record fields. The first section defines fields that are common to all data types. The remaining two sections define fields based upon whether the data type is analog or digital. Some of these fields are included for informational purposes only. Also, many of these fields will not necessarily appear in all of the published project I/O listings.

Emerson's Database Initial Definition Tool (DBID) is an offline pc-based utility that can be used to enter this essential database information for the DCS. Once the information is entered, the utility produces a file that can be imported into the actual Ovation DCS equipment.

References

- Appendix I – Database Field Entry
- Appendix II - Word and Phrase Abbreviations
- Ovation Record Types Reference Manual – REF_1140
- Ovation I/O Reference Manual - REF_1150

1. Common Fields

- Point Name is a unique identifier that is assigned to each field input and output. This identifier is coded with information pertaining to the plant, unit process, ISA and loop information associated with the I/O point.

- English Description is a functional definition of the Point Name, and appears in various system displays and listings. These rules are followed when assigning this field:

    - English Description is limited to 30 characters.

    - To benefit all users, English Description terminology, abbreviations and acronyms are consistent. Abbreviations are assigned so that their interpretations are as intuitive as possible, within the 30 character limit. Note that abbreviations are usually, but not necessarily unique, and that the context of the full description may provide the interpretation of what an abbreviation or acronym represents.

    - English Description specifically defines which device is being referenced. For example, "PUMP 1" is not an acceptable specific description, whereas 'TANK 1 GRIT PUMP 1" is an acceptable specific description.

- I/O Type defines the four distinct data types used in the database:

    - Analog Input (AI) is a continuous process or status input reading over a measured range.

    - Analog Output (AO) is a continuous control output signal, typically used to control a VFD or modulating valve.

    - Digital Input (DI) is a two-state reading of a device state, process state or device position.

    - Digital Output (DO) is a two-state control output signal, typically used to energize an interposing relay that starts a motor or drives a valve.

- Xmtr defines the communication method used between the DCS and the field device. The following communication methods are defined:

    - 4-20 mA - Specifies an Analog Input or Analog Output with a milliamp signal level that is directly proportional to a measured range or control range.

    - 2W - Specifies the use of a serial communication link (e.g. a PLC or valve communications link). Any I/O Type can use this communication method.

    - 24VDC - Specifies a digital signal that switches a 24 volt DC potential when reading a state or energizing a relay.

    - 120VDC - Specifies a digital signal that switches a 120 volt AC potential when reading a state or energizing a relay.

    - TC – Specifies an Analog Input with a millivolt signal level that is a function of sensed temperature.

- History defines which points should be archived. Analog points also require a historical deadband, which defines the incremental change required before a new analog value is archived. The default deadband value for an analog I/O point or calculated value is 1%., whereas critical points would be assigned a 0.5% value, and other points are not configured to be archived at all.

- P&ID references where the device can be found in the project specification P&ID or Electrical Plan drawing.

- DCU is a term used to describe a redundant control processor and it's supporting hardware.

- Alarm Priority (AP) is intended to inform the Operator of the urgency of an alarm. HRSD assigns alarm priority level definitions.

- Point Alias is an auxiliary database field that has been designated to hold the Old Point Tag, as designated in the project database.

- Characteristics are assigned to allow the User to assign console destinations for alarm points, and also as a sorting mechanism used with the Ovation Point Review utility.

- Security is assigned as a 32 bit field that defines which Users have access to the various control and tuning functions associated with each point.

2. Analog Fields

- AI Power specifies whether a 4-20 mA signal is powered locally at the DCU (DCS) or from a field power source (FIELD). Note that shields for all analog signal cabling will be grounded at the DCS.

- Top Bar (TB) is the maximum scale value of the point represented in engineering units. This attribute determines the scaling used for bar graphs and trend lines.

- Bottom Bar (BB) is the minimum scale value of the point represented in engineering units. This attribute determines the scaling used for bar graphs and trend lines.

- Range combines the TB and BB fields into a single field, for clarity.

- Engineering Units (EU) is the unit of measure that point value represents. Examples of Engineering Units would be PPM, MGD, GPM, PSI, etc. This description is limited to six characters.

- Decimal Places (FM) defines the number of decimal places that will be shown in the Point Information screen and by default on Graphics (unless otherwise defined within the graphic code).

- High Sensor (HS) is the maximum electrical range of the instrument providing the point value. For example, if an instrument operates within a 4-20 mA range, HS would be 20 mA. Likewise, if the instrument operates within a 1-5 VDC range, HS would be 5 VDC. Only enter the numerical value in the field; 5 in the last example. Note that for 4-20 mA signals, the high sensor alarm setting will be set at 20.4 mA.

- Low Sensor (LS) is the minimum electrical range of the instrument providing the point value. For example, if an instrument operates within a 4 to 20 mA range, LS would be 4 mA. Likewise, if the instrument operates within a 1 to 5 VDC range, LS would be 1 VDC. Only enter the numerical value in the field; 1 in the last example. Note that for 4-20 mA signals, the low sensor alarm setting will be set at 3.6 mA.

- High Alarm (HL) is the value at which an alarm is generated on increasing signal.

- Low Alarm (LL) is the value at which an alarm is generated on decreasing signal.

- Deadband (DB) minimizes the occurrence of nuisance alarming when a signal oscillates near a High Limit or Low Limit setting. Once a point has exceeded either threshold, the alarm will remain active until the signal passes back through the threshold by the amount specified in Deadband.

- Deadband Algorithm represents the units of the Deadband (DB) value indicated above (standard, percentage range, ratio, etc.)

- Top Output Scale (TW) represents the maximum value of an Analog Output in Engineering Units.

- Bottom Output Scale (BW) represents the minimum value of an Analog Output in Engineering Units.

3. Digital Fields

- Reset Description (RS) describes the state of a device or command when a Digital Input or Digital Output contact is opened.

- Set Description (ST) describes the state of a device or command when a Digital Input or Digital Output contact is closed.

- Alarm State (AR) specifies which logic state should be alarmed for a digital point, contact closed (AR = 1) or contact opened (AR = 0).

- Alarm is an alternative method used to display the Alarm State on a database listing and is positioned to indicate whether the Reset Description or the Set Description is the alarm state of the signal.

3 DCS Control Philosophy

The Ovation DCS offers a wide variety of hardware configurations and software tools, allowing the user maximum flexibility in the implementation of control applications. Like any software-based program, Ovation control applications follow stringent guidelines that dictate the programming structure and control logic flow. Implementation of such guidelines is critical to the efficient development of the control logic, successful installation of the DCS and ease of software maintenance for years to come.

The following sections summarize the DCS control application program structure, typical of the logic flow required for HRSD process control applications.

References

- Appendix IX – Level 1 Control Templates
- Appendix X – DCU Software Mapping
- Appendix XI – Sample Control Strategy
- Ovation Algorithms Reference Manual – REF_1100

3.1 Process Control Programming Structure

HRSD process control applications require two distinct layers of automation. Each layer requires a specific set of I/O signals and provides a limited level of automation. These levels can be summarized as follows.

Level 1 Control

This is the lowest level of automation, and provides manual start/stop/open/close control and monitoring of devices such as valves, pumps, breakers, etc. From a software standpoint, this layer of control is designed in a modular logic format since most devices require the same basic control functions. Provisions are also made to accept commands from higher levels of automation.

Devices that require continuous control signals such as modulating valves and variable speed drives are also considered as Level 1 control. The control for these devices is typically unique in nature and, therefore, is omitted below to simplify the discussion of control layering. Modulating control is specifically addressed later in this document.

Level 2 Control

This level of automation provides automatic control of multiple devices within a single process. Examples of logic functions included at this level are:

- Equipment sequencing
    - Lead/lag priority assignment
- Automatic equipment alternation of parallel devices

Much of this software is designed in a modular format.

3.1.1 Level 1 Control Automation

Level 1 control automation provides manual control/monitoring of devices such as valves, pumps, breakers, etc. This is the software equivalent of the type of hardwired controls that normally appear at a control panel or MCC. Features that appear at this level of software include:

- Operator interface
- Equipment protection interlocks
- Process interlocks

- Commands from other automation levels
- Device fail alarms

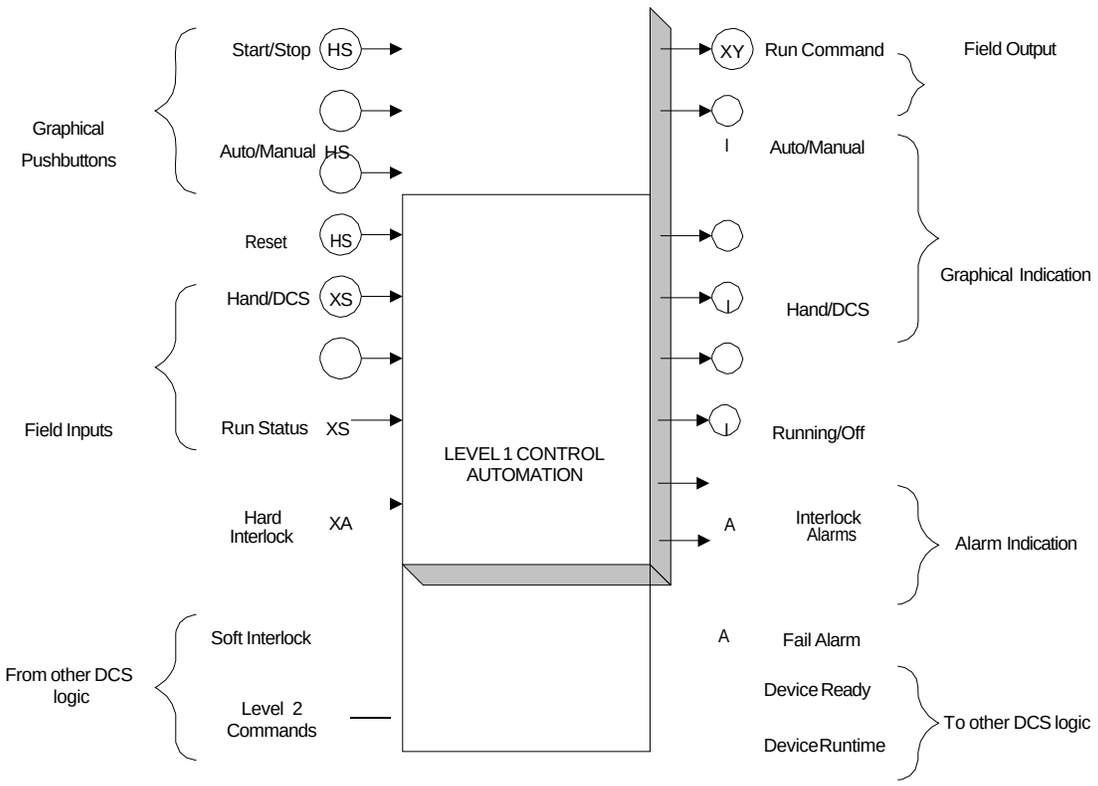

Figure 3.1.1 – Level 1 Control Automation Software Module

Figure 3.1.1 depicts a software module that controls an individual device such as a motor or breaker. This example generates one maintained control output based upon various Operator, I/O and DCS input signals. The module is designed to accommodate the worst case logic requirements of all field devices that utilize one maintained control output. For any device that does not match the requirements of the worst case device, all non-applicable input/output signals are disabled or ignored at the software module.

Other modules are developed for each type of control output requirement, e.g., one momentary output, two maintained outputs, two momentary outputs, etc. All modules have the same general characteristics:

- Operator Inputs – Graphical Pushbuttons
    - Start/Stop or Open/Close pushbuttons are provided to allow manual control from the DCS.
    - Auto/Manual pushbuttons are provided for any device that also has Level 2 control automation.
    - Reset pushbuttons are provided to allow the Operator to reset failure alarms.
- Field/DCS Inputs – Status and Interlock
    - Hand/DCS status is used to determine when the device is available for DCS control. Manual control pushbuttons are defeated when a device is in Hand control.

    - Device status provides the control feedback that is necessary to determine that the device is properly responding to the control output. A failure alarm is generated when the device does not respond properly to the DCS commands.
    - Hard (field) and soft (DCS) interlocks are used in permissive/interlock logic, providing equipment/safety protection.
    - Level 2 automation normally provides start/stop commands to Level 1 automation for control such as device sequencing, lead/lag operations and automatic device alternation.
- Operator Display – Status and Alarms
    - Operator control interface to Level 1 automation is normally depicted as a Manual/Auto (M/A) control station. The M/A station displays all status and alarm information, enabling the Operator to control, monitor and troubleshoot device operation from one graphic display.
- Field/DCS Outputs – Command Outputs and Device Ready Status
    - Command outputs drive the I/O that provides the DCS with the means to control the device.
    - In order to make control decisions without duplicating Level 1 logic, Level 2

automation requires a Device Ready status from the associated Level 1 automation. Device Ready status is a single signal that indicates that a device is in DCS control, is in DCS Auto, and has all interlocks cleared.

3.1.2 Level 2 Control Automation – Process Control

This portion of Level 2 control automation provides automatic control of multiple devices. This type of automation typically replaces repetitive or scheduled Operator functions that involve multiple pieces of equipment. Features that appear at this level of software include:

- Operator interface
- Process interlocks
- Process startup, shutdown and normal control
- Command/status from other automation levels
- Process fail alarm

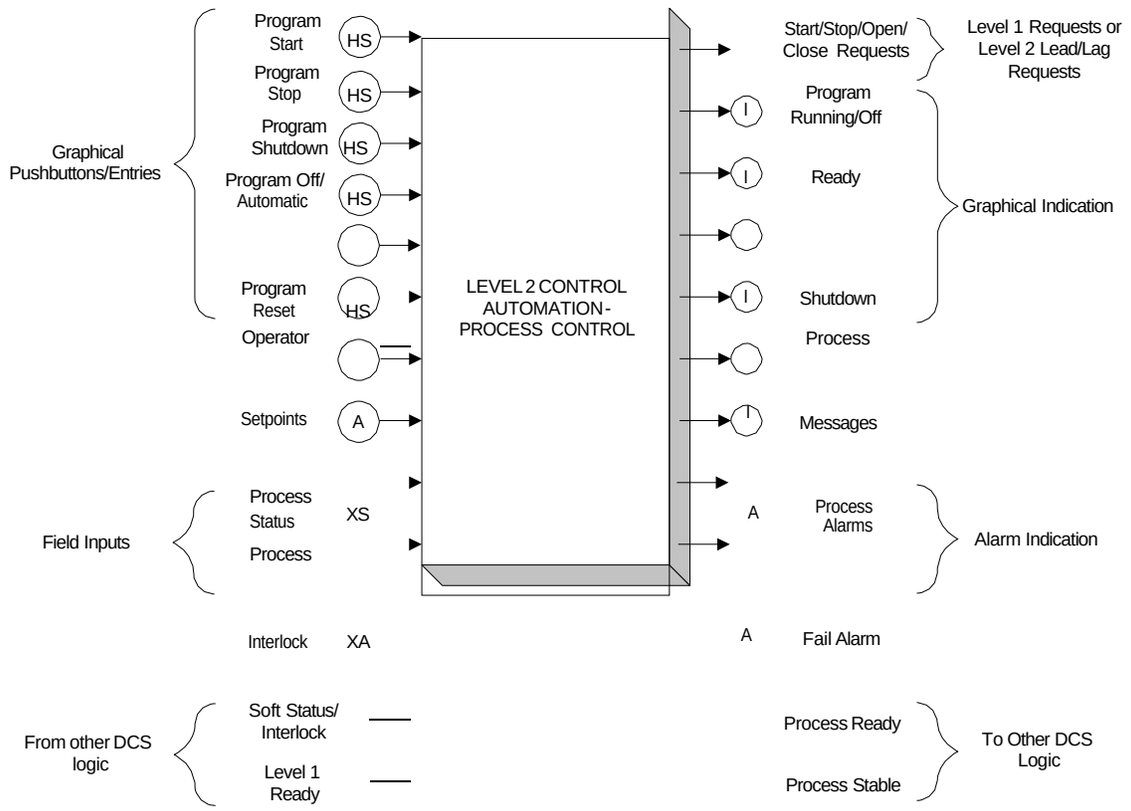

Figure 3.1.2 – Level 2 Control Automation Software Process Control Module

Figure 3.1.2 depicts a software module that controls multiple devices in response to process conditions and a predetermined program. This example generates multiple start/stop/open/close requests to other software modules. The interface to the Operator and to other software modules may be standardized, however the control program is customized based upon the process control requirements.

Other modules are developed for each specific process requirement. All modules have the same general characteristics:

- Operator Inputs – Graphical Pushbuttons/Entries

    - Program Start and Stop pushbuttons are provided for Operator initiation of the process. A Program Off pushbutton is provided to reset a sequence to its first step, when applicable. Process setpoints and timer settings are also typically required. A Program Reset is also provided as a means to reset any sequence FAIL event before reinitiating the sequence. A Program Shutdown pushbutton may also be required, which provides an immediate shutdown of the associated equipment.

- Field/DCS Inputs – Status and Interlock

    - Process status provides the control feedback that is necessary to determine that the process is properly responding to the control requests. A fail alarm is generated when the process does not respond properly.

    - Hard (field) and soft (DCS) interlocks are used in startup/shutdown permissive

logic, providing process protection. Equipment/safety protection is provided at the Level 1 control automation.

- Level 1 control automation provides Device Ready status information to Level 2 automation. This allows the Level 2 automation to determine which devices are

available to control the process.

- Operator Display – Status and Alarms

    - Operator control interface to Level 2 automation is normally depicted on an entire graphical display or a single control window, depending on the complexity of the process control. The graphic displays all status and alarm information and provides the Operator with informational messages that are unique to the process. This enables the Operator to control, monitor and troubleshoot the process operation from one graphic display. Level 1 M/A stations are also sometimes accessible from this display.

- Field/DCS Outputs – Control Requests and Process Ready Status

    - Control requests drive other software modules such as Level 2 Lead/Lag, Level 2 Alternation or Level 1.

3.1.3 Level 2 Control Automation – Lead/Lag Selection

This portion of Level 2 control automation accommodates the manual start/stop prioritization of multiple devices. Features that appear at this level of software include:

- Operator interface

- Manual start/stop prioritization

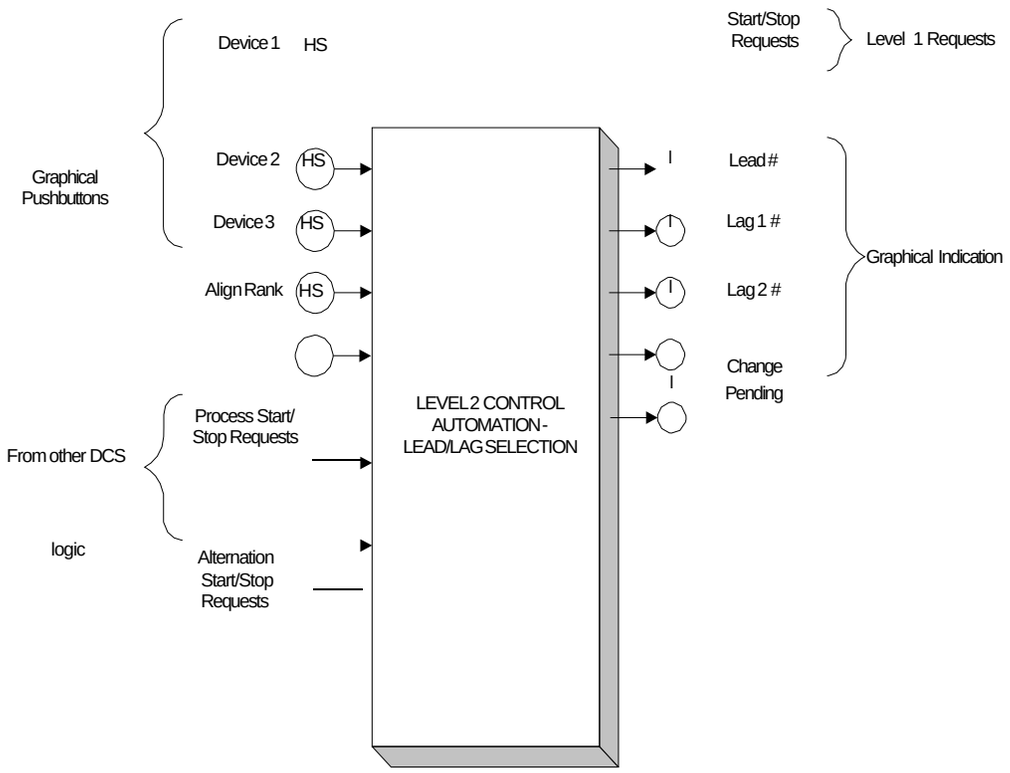

- Commands from/to other automation levels

Figure 3.1.3 – Level 2 Control Automation Software Lead/Lag Selection Module

Figure 3.1.3 depicts a software module that determines the specific selection of the next Level 1 device to start/stop. This example generates a control request for each device based upon various Operator

and DCS input signals. The final selection is based on a predetermined order that is set manually. The module is designed to accommodate the worst case logic requirements of all processes that utilize

a Lead/Lag type of selection. For any process that does not match the requirements of the worst case process, all non-applicable input/output signals are disabled or ignored at the software module.

Other modules may be developed for various types of control output requirement, e.g., Active/Standby, Lead1/Lead2/Lag, etc. All modules have the same general characteristics:

- Operator Inputs – Graphical Pushbuttons
    - Device pushbuttons are provided to allow manual order selection from the DCS. The Operator determines this by pressing the Device pushbuttons in the desired order.
    - The Align Rank pushbutton enables the Operator to execute an automatic re-alignment of the devices to match a new device order. Here, the highest priority devices are automatically started, and lower priority devices are stopped until the device statuses match the selected order.
- DCS Inputs – Status and Commands
    - This control module processes all requests from the Level 2 Process Control Module, and from the Level 2 Automatic Alternation Module when applicable.
- Operator Display – Status
    - Selection orders are displayed so that the Operator is aware of which device will be selected next.
    - The Operator may select a new device order if all devices are in the DCS Manual mode. Once an assignment is made for each device, a Pending Change message informs the Operator that the desired devices may again be placed in DCS Auto, then the Align Rank pushbutton will rotate the devices to match the new order.
- DCS Outputs – Control Requests
    - Control requests drive the associated Level 1 control automation.

3.1.4 Level 2 Control Automation – Automatic Alternation

This portion of Level 2 control automation requests the alternation of parallel devices based on one of several specified criteria:

- Runtime comparison to a manually set cycle timer
    - On start of alternating devices
- On device with least accumulated runtime, when device start is requested.

Features that appear at this level of software include:

- Operator interface
- Device current runtime comparison

- Commands to other automation levels

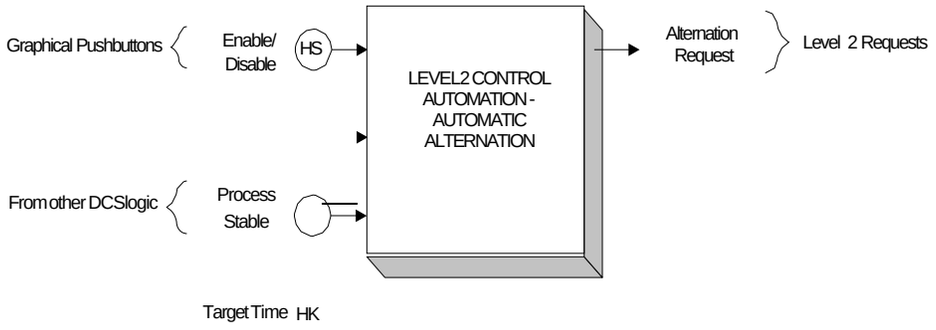

Figure 3.1.4 – Level 2 Control Automation Software Automatic Alternation Module

Figure 3.1.4 depicts a software module that determines when Level 1 devices need to be alternated. This example generates a control request to a Level 2 Lead/Lag Selection module based upon various DCS input signals. The output command is triggered based on equipment current runtime comparison to a manually set cycle timer. The module is designed to accommodate the worst case logic requirements of all processes that require automatic alternation. For any process that does not match the requirements of the worst case process, all non-applicable input/output signals are disabled or ignored at the software module. This module has the following general characteristics:

- Operator Inputs – Graphical Pushbuttons
    - Enable/Disable selections activate/deactivate the automatic control.
- DCS Inputs – Status and Commands
    - In this example, the device's current runtime is compared to a target (elapsed) time setpoint to determine when the equipment should alternate. Device current runtimes are calculated at Level 1.
    - When applicable, Level 2 automation only permits equipment alternation when the process is stable.
- DCS Outputs – Control Requests
    - Control requests drive the associated Level 2 Lead/Lag Selection Module.

3.1.5 Control Automation

Figure 3.1.5 summarizes the general handshaking requirements between Level 1 and Level 2 controls:

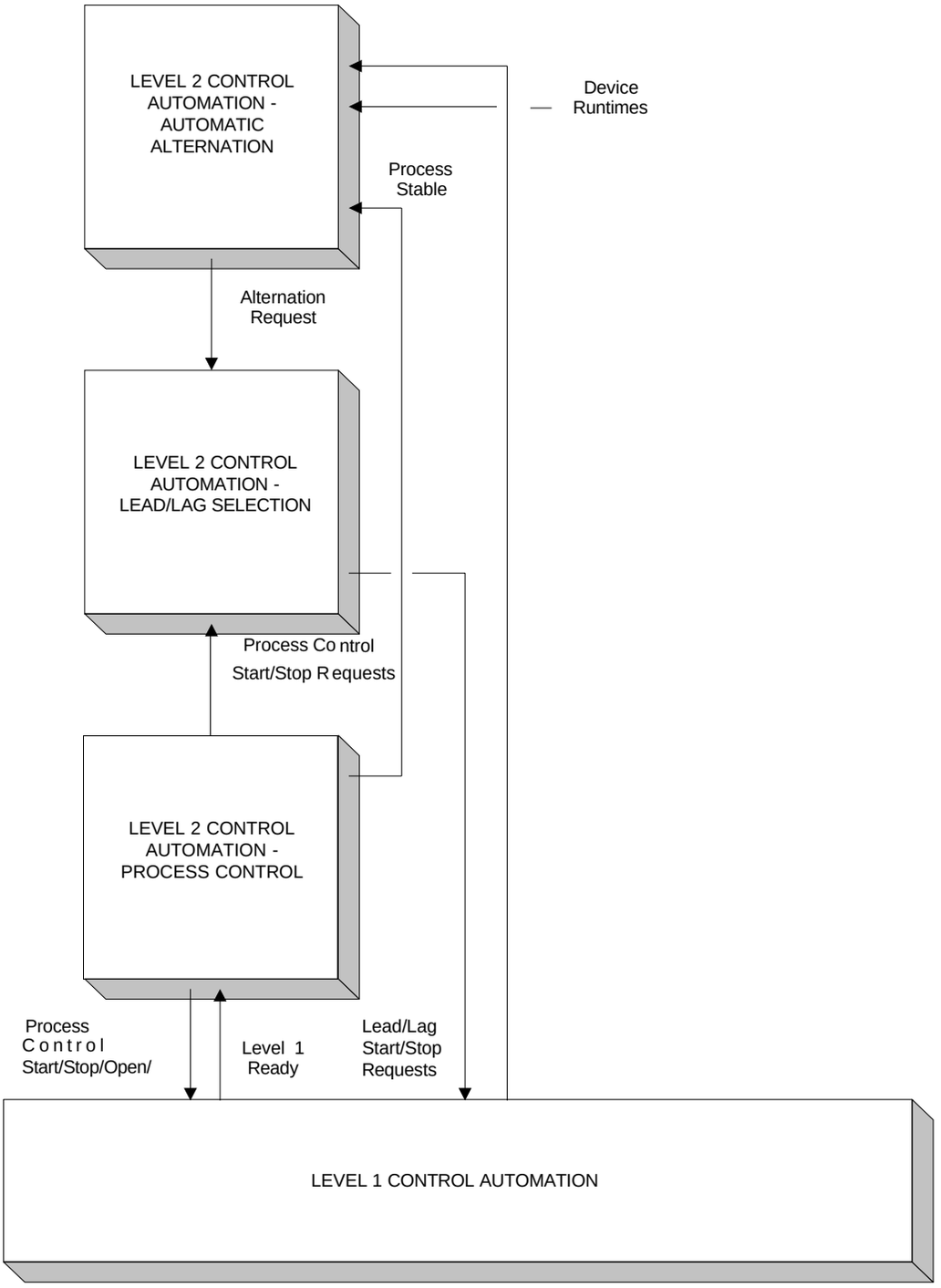

Figure 3.1.5 – Level 1/2 Control Automation Command/Status Flow

3.2 Failure and Availability Modes

The following alarms and failure modes will be provided for the indication of abnormal conditions of the equipment controlled by the DCS. This logic is provided to alert the operator of abnormal conditions that affect the DCS controls, and to provide the automatic controls with the information required to adapt to the same abnormal conditions. Note that upper case terms are used to represent control pushbuttons and indications that are integrated onto the Operator/Engineer displays.

3.2.1 General Failure and Availability Modes

- DATA LINK FAILURE - The DCS and PLC application programs combine to create a simple pulse train, or watchdog signal, for each DCS/PLC data link. If the pulse train ceases alternating between logic 0 and logic 1 states, then a DATA LINK FAILURE alarm is set. After a communication between the DCS and the PLC is reestablished, this alarm will be cleared automatically and after a predefined time delay all the DCS control functions will be restored.

- READY - The DCS continuously monitors the status and alarm condition of each controlled device. A device is defined as READY under the following conditions:

    - The local HAND/DCS switch is in DCS position, and

    - The device INTERLOCK flag is reset (if applicable), and

    - The device PERMISSIVE flag is reset (if applicable), and

    - DATA LINK FAILURE flag is reset (if applicable), and

    - None of the DCS originated alarms described below and specified for each type of the controlled device are active, e.g., drive FAIL TO START, drive FAIL TO STOP, valve FAIL TO OPEN, valve FAIL TO CLOSE, etc.

- AVAILABLE - This flag is used by Level 2 software to determine the equipment availability. A device is defined as AVAILABLE for strategy under the following conditions:

    - device READY flag is set, and

    - The device is selected to DCS AUTO mode

3.2.2 Drive Failure Modes

- INTERLOCK - This signal combines a complete list of DCS signals, which are defined as interlock criteria for a running drive that is controlled by the DCS, e.g., drive OVERLOAD, pump DISCHARGE PRESSURE HIGH, etc. The number and types of alarms included in drive INTERLOCK is specific for each type of controlled device and is defined at the database level or derived from other DCS logic. All signals, which are included in a drive INTERLOCK are displayed at the M/A station. Under occurrence the DCS commands the drive to STOP, prevents it from starting and sets the drive FAILED alarm.

- PERMISSIVE - This signal combines a complete list of DCS signals, which are defined as start-up permissive criteria for a drive that is controlled by the DCS. The number and types of alarms included in drive PERMISSIVE is specific for each type of controlled device and is defined at the database level or derived from other DCS logic. All signals, which are included

in a drive PERMISSIVE are displayed at the M/A station. Under occurrence the DCS commands the drive to STOP and prevents it from starting.

- FAIL TO START - When a stopped electrical drive is commanded to start by the DCS in either MANUAL or AUTO mode and a running feedback is not received within a preset time, the Operator will receive a FAIL TO START alarm for the drive. This alarm is latched at the DCS and can be either manually reset by the Operator at the respective M/A station or is automatically reset when the drive HAND/AUTO switch is turned to HAND position. If the drive is controlled through a data link, this alarm will be disabled during DATA LINK FAILURE.

- FAILED - If a running electrical drive (e.g., pump, blower, etc.) stops while commanded to run by the DCS in either MANUAL or AUTO mode or if the drive INTERLOCK signal is set for such a drive, the Operator will receive a FAILED alarm for the drive. This alarm is latched at the DCS and can be either manually reset by the Operator at the respective M/A station or is automatically reset when the drive HAND/AUTO switch is turned to HAND position. If the drive is controlled through a data link, this alarm will be disabled during DATA LINK FAILURE.

- FAIL TO STOP - When a running electrical drive is commanded to stop by the DCS in either MANUAL or AUTO mode and a stop feedback (removed running feedback) is not received within a preset time, the Operator will receive a FAIL TO STOP alarm for the drive. This alarm is latched at the DCS and can be either manually reset by the Operator at the respective M/A station or is automatically reset when the drive HAND/AUTO switch is turned to HAND position. If the drive is controlled through a data link, this alarm will be disabled during DATA LINK FAILURE.

- SPEED DEVIATION - This alarm will be activated at the DCS for a variable speed pump if, for a preset amount of time the actual pump speed differs from the required pump speed by more than a preset value.

3.2.3 Valve Failure Modes

- INTERLOCK - This signal combines a complete list of DCS signals, which should interlock a controlled valve, i.e., valve JAMMED, valve HIGH TORQUE, etc. The number and types of alarms included in valve INTERLOCK is specific for each type of controlled device and is defined at the database level, or derived from other DCS logic. All signals, which are included in a valve INTERLOCK are displayed at the M/A station.

- FAIL TO OPEN - When a valve is commanded to open by the DCS in either MANUAL or AUTO mode and an open feedback is not received within a preset time, the Operator will receive a FAIL TO OPEN alarm for the valve. This alarm is latched at the DCS and can be either manually RESET by the Operator at the respective M/A station or is automatically reset when the valve HAND/AUTO switch is turned to HAND position. If the valve is controlled through a data link, this alarm will be disabled during DATA LINK FAILURE.

- FAIL TO CLOSE - When a valve commanded to close by the DCS in either MANUAL or AUTO mode and a close feedback is not received within a preset time, the Operator will receive a FAIL TO CLOSE alarm for this valve. This alarm is latched at the DCS and can be either manually RESET by the Operator at the respective M/A station or is automatically reset when the valve HAND/AUTO switch is turned to HAND position. If the valve is controlled through a data link, this alarm will be disabled during DATA LINK FAILURE.

- SWITCH FAILURE - If at any time both OPEN and CLOSE limit switch signals are received by the DCS at the same time, the SWITCH FAILURE alarm will be set. This alarm is latched at the

DCS and can be only manually RESET by the Operator at the respective M/A station. If the valve is controlled through a data link, this alarm will be disabled during DATA LINK FAILURE.

- POSITION DEVIATION - This alarm will be activated at the DCS for a modulating valve if, for a preset amount of time the actual valve position differs from the required valve position for more than an preset value.

(a) 4 Custom Graphics and HMI Configuration

Custom graphics are the most important interface tool provided with the DCS. These graphics, combined with the Ovation Human/Machine Interface (HMI) software packages, provide the monitoring and control access required for the Plant Operations and Maintenance (O&M) staff to perform their daily tasks. Development of an efficient, user-friendly HMI environment enhances the performance of the user and the resulting Plant operation.

Like any user interface, graphics design and HMI configuration must consider "human factors". These factors include:

- Consistency
- Navigation
- Presentation (e.g., colors, blinking, shapes)
- Control accessibility
- Uniformity between different applications

The purpose of this Section is to define the approach used for the design and development of DCS control and monitoring graphics, and how they are integrated into the HMI environment. Specific concepts, examples and programming notes are included in various Sections of this document to assist the software development and maintenance efforts.

References

- Appendix III – Graphic Hierarchy
- Appendix IV – Graphic Navigation
- Appendix V – Graphic Display Elements
- Appendix VI – Process Colors
- Appendix VII – Graphic Macro List
- Appendix VIII – Sample Graphic Types
- Operator Station User Guide – OW331-20
- Operator Station Configuration Guide – OW331-21
- Graphics Builder Use Guide for Ovation 3.3 – OW331-90
- ISA 101 standards.

4.1. Graphics Hierarchy

4.1.1 General

- Graphics should follow ISA 101 standards.

A graphics hierarchy defines the “road map” for the organization and navigation of the DCS graphics. An effective graphic hierarchy provides the user with a consistent and an intuitive interface to the DCS monitoring and control functions.

The following general design concepts must first be established:

- Graphic Types – Most graphic types should mimic the appearance of project mechanical, architectural, electrical and instrumentation drawings. Standard formats are established for each type based upon desired levels of monitoring and control functionality, giving the user an immediate "feel" for the content and control accessibility of each graphic. In addition, each graphic type should appear somewhat similar to the other types. These standardized appearances also aid in identifying the hierarchical location of each graphic, resulting in more intuitive navigation actions by the user.

- Functional Areas – Functional Areas are established based upon plant-specific areas, unit processes and auxiliaries. Related piping, structures and equipment are grouped together on a graphic or set of graphics, to the extent allowed by the density limitations of the graphic type being used. Note that pan and zoom features are available as part of the standard viewing system, and their use should be considered when evaluating Functional Areas and graphic density. However, because of the number of user actions required to pan and zoom, its use should not be relied upon for normal user activities.

- Navigation – Paging symbols and Pop-Up windows are used to guide the user through the hierarchical map. Standard symbol locations and consistent graphic types result in more intuitive paging actions by the user. Paging symbols are also sometimes assigned for process lines that are continued between graphics.

- Pop-Up Windows - Pop-Up Windows provide a powerful alternative to using full-size graphics for paging, monitoring and control functions, significantly reducing the required number of user mouse actions.

4.2 Graphic Types

4.2.1 Plant Overview Graphics

Plant Overview graphics provide the highest level of display for the user’s DCS operation. These graphics summarize the equipment layout and process status for multiple Functional Areas on a single graphic.

Three types of Plant Overview graphics are designed:

4.2.2 Display Menu – This provides a one-page summary of all custom mainscreen graphics provided with the system. This graphic is normally shown in a format that shows the hierarchical arrangement of the graphics.

4.2.3 Plant Overview - This provides a simplified P&ID diagram of the entire plant process and includes dynamic information for major plant process variables and equipment statuses.

4.2.4 Multi-Process Overview – This provides a simplified P&ID diagram of several related plant unit processes on a single graphic and includes dynamic information for major process variables and equipment statuses.

5 Unit Process Overview Graphics

Four types of Unit Process Overview graphics are designed:

5.1 P&ID graphics provide status update and high level control of multiple related devices within a Plant Functional Area. These graphics inherently can become very dense; therefore process and equipment representations are kept simple, may not always provide a true representation of equipment orientation, and look similar to the process and instrumentation drawings (P&ID) found in the project plans. Functional process layout is shown, along with related process variables, statuses, alarms and controls.

5.2 Electrical Single Line graphics are specific to electrical equipment arrangements and are similar to the one-line drawings found in the project plans. Functional electrical layout is shown, along with related process variables, statuses, alarms and controls.

- DCS System Status graphics represent the DCS network architecture and provide a constant update of the control system hardware status.

- Tabular graphics provide a summary of miscellaneous dynamic information that does not have an efficient graphical representation or would otherwise clutter another graphic. Information is presented in functionally grouped tables.

6 Unit Process Graphics

Two types of Unit Process graphics are designed:

- P&ID graphics provide individual control of devices related to a specific area or process. Process and equipment representations utilize a two-dimensional style of symbols. Functional process layout is shown, along with related process variables, statuses, alarms and controls.

- Electrical Single Line graphics are specific to electrical equipment arrangements and are similar to the one-line drawings found in the project plans. Functional electrical layout is shown, along with related process variables, statuses, alarms and controls.

7 Graphic Functional Areas

Graphic Functional Areas are established based upon plant-specific areas, unit processes and auxiliaries. Definition of these areas establishes the graphic display hierarchy. The following guidelines are used in the assignment of Functional Areas:

- Related process flow and plant areas are grouped.

- Processes should be separated from common plant auxiliary systems such as plant air and water. This causes less confusion and congestion on potentially dense graphics.

- Related graphics should be combined when sufficient space exists, thus minimizing the total number areas and simplifying navigation.

- Control for any specific device should appear in the fewest possible areas to minimize confusion.

- A specific range of graphic numbers is assigned to each area.

8 Graphic Navigation

With the proper design of Graphic Types and Functional Areas, most Graphic Navigation should inherently exist. The following guidelines are used in the assignment of Graphic Navigation:

- Navigation symbols should appear in consistent locations from graphic to graphic. When navigation symbols are grouped, their order (left/right/top/bottom) should reflect the process flow, which should also reflect the graphic hierarchy.

- Each graphic should contain a mechanism (drop-down menus or "shortcut keys") that enables immediate access to other graphics.

- Process lines may include paging symbols when the lines connect to other graphics.

- Extraneous paging symbols should be avoided since there is no location consistency from graphic to graphic. This tends to confuse the user and also uses valuable graphic space. Instead, the hierarchical design should already provide an intuitive means for the user to quickly display any graphic.

- Paging between different graphic types tends to be confusing and should be avoided.

9 Pop-Up Windows

Pop-Up Windows should be used extensively to facilitate user monitoring and control actions, and to reduce the number of user paging actions. Size should be considered when designing these windows, since it may be undesirable for the window to cover a substantial portion of the main graphic, however some applications require that no limit be defined. Predefined symbols locate the "poke field" areas that call up the windows from the mainscreen graphics. The following are uses for Pop-Up windows:

- Manual/Auto Control Stations - Analog/digital control stations are the most common application for Pop-Up Windows. Standard station sizes are defined, as well as the maximum number of stations per window. Equipment symbols are used to designate the associated poke field areas.

- Strategy Windows - Start/Stop strategy, Lead/Lag selection, value entry, sequence initiation and sequence step displays are typical functions applied to Strategy Windows. The possible combinations of these functions should be predefined, which would in turn define the number of user actions required to initiate a typical control. Due to the wide variation of possible control combinations, these windows typically have no predefined sizes. Text or equipment symbols are used to designate the associated poke field areas.

- Paging Menu - These "drop-down" windows allow the user to quickly navigate between graphics.

10. Base Workstation Features

10.1 General

When designing custom graphics, consideration must be given to the user interaction with the base workstation features. Custom graphic elements and related workstation functions should have a similar appearance and "feel". Note that it is not in the scope of this Section to define the specific workstation parameters, but only to summarize the relation of the graphic interface to standard workstation functions.

The following base workstation features must be considered when implementing the custom graphic design:

- Alarm List
- Trend Package
- Custom Graphic Menus
- Custom Keypad
- Keyboard Paging Arrows
- Diagram Display
- Navigation and Control
- Security Levels
- Operating System Commands

10.2 Workstation/Custom Graphic Interaction

- Alarm List.
    - Alarms should follow ISA 18 recommendations. The Alarm List provides a centralized interface for the user to manage all process and control system alarms. Custom graphics can provide a similar interface:

- Dynamic Display Elements - Any graphic display element can be designed to change color and/or blink based upon its associated alarm statuses. Implementing these dynamics on the custom graphics provides the user with the same information presented on the Alarm List, with the benefit of specifying only the subset of alarms that is associated with the graphic being displayed. Any combination of color and blink dynamics can be used on the custom graphics.

- Alarm List Invocation - The Alarm List appears in a window that is independent from the custom graphic viewing system, with the call-up icon being located on the workstation desktop. Custom graphics can be designed to call up the Alarm List from an icon coded within the graphic.

- Bell Silence and Alarm Acknowledge Control - These controls are standard functions on the Alarm List window and can be replicated on the custom graphics. Subject to alarm filtering parameters, the Operator may Silence or Acknowledge any DCS alarm from any workstation.

11 Trend Package

The Trend Package provides trending capability for 600 groups of points, each group having a maximum of 8 points apiece. Trend Groups appear in windows that are independent from the custom graphic viewing system. Custom graphics can be designed to call any specific trend group window without having to use the standard trend group menu function.

12. Diagram Display

The workstation's Operating System includes a program that displays any custom graphic by entering/selecting the assigned graphic number. This function is intended as a development/troubleshooting aid only and should not be made available to most users.

13 Navigation and Control

The workstation provides various means to navigate the cursor and activate control functions. Most users will use the mouse/trackball for as many functions as the interface is designed to accommodate, therefore the majority of custom graphic designs encourage the use of the mouse/trackball to select and activate the controls.

14 Security Levels

The workstation provides security controls through the use of the Ovation user login identification. Ovation Control and Engineering Function accessibility is enabled/disabled through the Ovation workstation security tools. Custom graphics may be viewed at any security level; however, control, engineering and maintenance functions are normally restricted.

15 Operating System Commands

Custom graphics have the capability of executing any Operating System command that is accessible by the user's security level. Typically, users of custom graphics have little need for such a feature to be included (except for convenience), since most programs available to the user are already accessible by other methods via the workstation's Operating System menus.

16. Base Graphic Standards

16.1 General

All graphics should follow ISA 101 standards.

Base graphic standards provide the foundation from which all custom graphic designs evolve. Like any project, these standards must be developed before any programming begins, and its associated documentation must be updated as the project progresses. Strict enforcement of such standards provides a consistent design, as well as a product that is cost-effective to develop and maintain. The following general categories of information must be defined:

- Graphic Window Parameters
- Graphic Layout Guidelines
- Plant-Specific Information
- Graphic Element Appearance

16.2 Graphic Window Parameters

Primary consideration must be given to the graphic dimensions, it's call-up location and the background color of the graphic window. The following parameters are configurable for each graphic:

- Design Size - Graphics are normally designed with a single, standard dimension that does not cover the entire desktop. This provides consistency and allows quick access to desktop icons for base workstations functions such as the Alarm List and the Trend Package.
- Fixed/Default Size and Location - These parameters determine whether each graphic is called up in a fixed size and location, or whether it should simply assume the previously displayed graphic's size and location. As with any desktop arrangement, users typically find it annoying for the system to resize and rearrange their windows, therefore fixed parameters are normally discouraged here.
- Resize/Zoom - These parameters are typically enabled to allow the user to fit more windows on the screen, and to enable the user to obtain a clearer view of the area of interest on the graphic. Note, however, that graphics should not be designed to require the user to zoom/pan the graphic window.
- Background Color - A single, dark background color should be chosen for all graphics, thus reducing eye strain for the user. The design should also allow for sections of a graphic to have another background color, thus furnishing a means to highlight a group of related devices.
- Grid - When possible, custom graphics should be designed on a fixed grid map. This simplifies graphic development and maintenance, and results in a better design.

17 Graphic Layout Guidelines

All custom graphics, no matter which type is chosen, are normally designed with some common display elements. These elements are typically placed in one of five areas, with the same information appearing in the identical location from graphic to graphic:

- Header Area (top)

- Footer Area (bottom)
- Left Margin
- Right Margin
- Corners

The following types of information are typically assigned to these areas. Care must be taken to minimize the amount of graphic space assigned to these areas, considering that the body of the graphic may need to consume all available space.

- Graphic Number - This information is helpful for development and troubleshooting, as well as for general reference needs in the project documentation.
- Graphic Title - In normal discussion, graphics are referenced by description instead of by number, therefore a concise title is appropriate for each.
- Navigation - These areas are ideal locations for the implementation of hierarchical graphics paging pop-up windows and shortcut keys.
- Time/Date - This information is sometimes useful for reference on graphic screen dumps, showing process variable values at a specific time and date.
- Process Variable Information - These areas are ideal locations for the display of major process information, such as Plant Influent Flow or Unit Megawatts.
- Plant/DCS Specific Information - Other important information such as plant location or DCS status can be placed here.
- Access to Base Workstation Features - Normally, graphics are sized in such a manner that desktop icons are readily accessible. In cases where graphics are designed to cover the majority of the desktop, access to base workstation features may be required in these areas.
- People are conditioned to read information in fixed directions. For example, in the United States, the typical user tends to read from left to right, and from top to bottom. Graphic designers must consider this natural user response when arranging screen content, and processes should tend to flow in these directions. Note that in this same example, the expected flow also favors a clockwise direction over a counter-clockwise direction.

18 Plant-Specific Information

As installations vary from company to company, and industry to industry, there are limitless possibilities of plant-specific information that may be required to be included on the custom graphics. The minimum required information is outlined below. Normally this information can be found in the project plans and specifications.

- Process Colors - Many installations color code the physical plant piping to facilitate the tracing of pipes. The custom graphics should follow a similar color scheme.

19 Base Graphic Elements

All custom graphic content consists of one or more base graphic elements that have stand-alone functionality, and act as building blocks for more complex graphic elements. Base static and dynamic features must be pre-defined and passed into the design of complex graphic elements.

19.1 Base Graphic Element Appearance

Ergonomic guidelines must be followed when choosing colors, blink attributes and fonts:

- Bright colors should be avoided, as well as large blank areas of light coloring on a dark background.
- When choosing a color, always consider the background color on which the associated element will appear and check for an acceptable degree of contrast.
- The overall graphic design should reduce the possibility of having too many different colors on a single graphic. Too many colors make the graphic look "busy" since the user's mind will subconsciously attempt to interpret each color.
- The exclusive use of color to convey specific information should be avoided since the user may suffer from some degree of color-blindness.
- Large blinking elements should be avoided, as well as elements that always blink.
- Font sizes and styles should be consistent between like functions.
- The number of different font sizes and styles should be minimized.
- Because of the density requirements of a typical set of custom graphics, it is difficult to avoid using small font sizes. Graphic designers should preview all font choices on a CRT that has the minimum size and resolution that will be used on the installed system.
- Center text on both the X and Y axis when the background is a colored bar. When using blank spaces to center text, and an odd number of spaces are available, put the extra space on the right side of the text (e.g. --center---, not ---center--).
- Capital letters should be used for most text to make the graphics more readable.

19.2 Base Graphic Element Functions

Pre-defining the base function of each type of graphic element results in consistent custom graphics and simplifies their development and maintenance. Base functional definitions should include size, color, and dynamic behavior.

- Text - Text is the most used graphic element, and default system text sizes should be used. Graphics designers must take into consideration that the size of most other graphic elements will be affected by the text sizes that are chosen.
- Lines - Lines are commonly used for piping, table construction and as pointing mechanisms. Line types and widths are chosen from system default menus. The use of different line types should be limited, since only a few different types are easily distinguishable on the typical graphic display.

- Polygons - Polygons are commonly used for piping and structural graphic representations. One advantage that polygons have over lines is that they have the option of including an outline color.

- Rectangles - Regular rectangles are used as needed. OL rectangles are normally used as background elements for 3-D representations.

- Shapes - A shape library provides pre-defined symbols for use throughout the graphics. Often, however, macros are instead used for this purpose because of their flexibility in including other graphic elements and complex dynamics.

- Filled Areas - Fills are used to paint areas within a specific boundary. Often, however, polygons are favored because the fill boundary rules are sometimes difficult to implement, and because fills tend to consume more of the workstation's processor resources.

- Process Points - Process points display analog values in a wide variety of formats. Quality indications are often included to display when a value may be invalid or not updating.

- Bargraphs - Bargraph indicators are used in a manner similar to that provided by hardened control panels. Bargraphs are useful in providing a more physical representation of an analog value. This is normally applied to a display such as tank level, or where related values are displayed side by side, as in the case of an M/A station.

- Poke Fields - Poke fields provide the user with the ability to interact with the graphics and process controllers. Typical applications include navigation and control. Unique symbols are used to indicate where poke fields are available.

- Entry Fields - Entry fields provide the user with the means to input data into the control system Typical applications include tuning adjustments and equipment start/stop prioritization.

19.3 Macros

- In order to simplify programming, graphic elements can be combined into library elements called macros. Macros feature a fill-in-the-blanks approach to programming simple or complex display elements.

Appendix I – Database Field Entry

General

This Appendix describes various database entry guidelines. The enclosed listings provide the User with the pre-defined options that are available for each entry. Refer to Section 2 of this document for general database information and references.

I/O Point Names

This Appendix describes the point naming scheme for I/O points. I/O point names are limited to 16 characters in length, and some non-alphanumeric characters are not allowed. When assessing I/O point naming lengths, internal point naming standards must also be considered.

Plant and Pump Station Naming Standards

I/O points must have a unique name on a single DCS network. Identical point names on different networks are not recommended since it can cause confusion when data is drawn from multiple networks. The first three characters will describe the Plant or Pump Station with which the point is associated.

Unit Process Standards

To facilitate data sorting and identification, the fourth and fifth characters of the point name will represent a Plant Unit Process. For consistency, Unit Process designations will match between different Plants, and pre-defined HRSD designators (two-digit numbers) will be used.

Function Designator

The third designator in the point naming scheme will consist of a four character representation that most closely describes the point function, generally following ISA standards.

Loop Designator

The fourth designator in the point naming scheme will consist of a four digit loop identifier, and typically represent a single device or group of related devices. Loop assignments are defined in the project database.

Loop Suffix Designator

For devices that have the same Plant/UP/ISA/Loop designators, a provision is made to differentiate point names through the addition of an alphabetic (A-Z) loop suffix.

Typical Point Name

Using the aforementioned schemes, a typical point name will appear as in the following example:

ABP12FITX2013

This point name represents a flow indicating transmitter at the Army Base Treatment Plant, Unit Process 12, and identified by loop number 2013.

All DCU and RIO cabinet alarms shall be included in unit process 99 and be tagged as follows:

UPS summary alarm	ABP99YAAXxxyy
UPS low battery	ABP99YABXxxyy
UPS on battery	ABP99ONBTxxyy
UPS on bypass	ABP99ONBYxxyy
UPS ON STATUS	ABP99ONSTxxyy
Cabinet door closed	ABP99CLSSxxyy

Where xx = Drop and yy = RIO. Examples: ABP99YAEX0100 is Drop 1 UPS is bypassed, ABP99YABX2221 is RIO 21 UPS low battery, which is controlled by drop 22.

Internal Point Names

Internal point names are added to the DCS as required to implement the control logic. These can be Analog, Digital or Packed points, and will follow a pattern similar to that used for I/O points, with the following exceptions:

Internal Function Standards

The third designator in the point naming scheme will consist of a four digit pseudo-ISA representation that most closely describes the internal point function.

Fourteenth Character

In order to quickly identify internal points, the fourteenth character will be a dash "- ".

Internal Point Suffix

A two-character suffix is added to the last two positions, thus allowing multiple internal points to be assigned to a single control function.

Typical Internal Point Name

Using the aforementioned schemes, typical internal point names will appear as in the following examples:

ABP01B00X1036-00

ABP01FCLS1036-00

The first point name would represent internally generated packed status bits, while the second represents a FAIL TO CLOSE alarm for the same unit process 1 device at the Army Base Treatment Plant, identified by loop number 1036.

Alarm Priority and Color Standards – Follow ISA18

Any point designated as an alarm must be assigned a priority and a color for display on the DCS Alarm List. The Ovation system provides for up to 8 alarm priorities, 1-8 (most critical to least critical). Note that the color assignment made here will also be used on the custom graphic displays, as applicable.

Alarm Destination Standards

At the HMI, the User can select Normal or Priority Mode for alarm list display. Typically, the Normal Mode is configured to show all alarms. Priority Mode is typically configured to display User-specific or Location-specific alarms. Alarm destination is used to assign each point to these alarm configurations. Note that 26 categories of alarm destination are available, and one is reserved for DCS-related alarms.

Point Characteristics Standards

At the HMI, the User is provided with a utility to sort thru the system database points for various status information. Point Characteristics provides the sorting mechanism. Eight characters are assigned to each point to categorize the possible sort combinations. Note that the first Point Characteristic is always the alarm destination designator.

HRSD Functional Tag Standards and Conventions

Tag	Function	Initiating Device
AAHH	Analyzer Alarm High High	Gas Monitoring System
AAHX	Analyzer Warning High	Gas Monitoring System
AALX	Analyzer Alarm Low	Gas Monitoring System
AITX	Analysis Indicator Transmitter	Analysis Transmitter or System
CLSC	Valve/Slide Gate Close Command	DCS
CLSP	Valve/Slide Gate Close Permissive	DCS
CLSS	Valve/Slide Gate Close Status	Field Device
EAHX	Voltage Alarm High	Generator System
EALL	Voltage Alarm Low Low	Generator System
EALX	Voltage Alarm Low	Generator System
EITX	Voltage Indicator	Generator System
FALX	Flow Alarm Low	DCS
FITQ	Flow Indicator Transmitter Totalizer	Flow Transmitter (pulse)
FITX	Flow Indicator Transmitter	Flow Transmitter
FSLX	Flow Switch Low	Flow Switch
HSAS	Hand Switch in Auto Status	HOA Selector Switch
HSHS	Hand Switch Hand Status	HOA Selector Switch
HSOS	Hand Switch Off Status	HOA Selector Switch
IITX	Current Indicator	Generator System
JHXX	Power Demand High	Power Transmitter
JITX	Power Indicator	Generator System
HBCX	Heartbeat Output	DCS
KQIX	Run Time Indicator	Field Equipment
HBIX	Heartbeat Input	PLC
LAHH	Level Alarm High High	Field Equipment
LAHX	Level Alarm High	Field Equipment
LALL	Level Alarm Low Low	Field Equipment
LALX	Level Alarm Low	Field Equipment
LITX	Level Indicator Transmitter	Level Transmitter
LSHH	Level Switch High High	Level Switch or System
LSHX	Level Switch High	Level Switch or System
LSLL	Level Switch Low Low	Level Switch or System
LSLX	Level Switch Low Limit	Level Switch or System
LSXX	Switch	Field Equipment

NAHH	Torque Alarm High	High	Torque Monitoring System
NAHX	Torque Alarm High		Torque Monitoring System

HRSD Functional Tag Standards and Conventions

Tag	Function	Initiating Device
NIXX	Torque Indication Torque	Torque Monitoring System
NSHH	Switch Fail Not Running	Torque Monitoring System
OFST	Status (OFF) Running	MCC, AFD, Control Panel
ONST	Status (ON) Running	MCC, AFD, Control Panel
ONSF	Forward Running Reverse	MCC, AFD, Control Panel
ONSR		MCC, AFD, Control Panel
OPNC	Open Command	DCS
OPNP	Open Permissive	DCS
OPNS	Open Status	DCS
PAHH	Pressure Alarm High High	Control Panel
PAHX	Pressure Alarm High	Control Panel
PALL	Pressure Alarm Low Low	Contro Panel
PALX	Pressure Alarm Low	l Panel
		Control
PDAH	Differential Pressure Alarm High	DCS
PDAL	Differential Pressure Alarm Low	DCS
PDHH	Differential Pressure Alarm/Switch High High	DCS/Differential Pressure Switch
PDLL	Differential Pressure Alarm/Switch Low Low	DCS/Differential Pressure Switch
PDSH	Differential Pressure Switch High	Differential Pressure Switch
PDSL	Differential Pressure Switch Low	Differential Pressure Switch
PDIT	Pressure Differential Indicating Transmitter PITX PSXX PSHH PSHX PSLL	Differential Pressure Transmitter

PSL	Pressure Limit Switch
X	Pressure Switch High High Pressure Switch High Pressure Switch Low Low
Pres sure	Pressure Switch Low
	Indicating Transmitter

Pre	T
ssu	r
re	a
Pres	n
sure	s
Pres	m
sure	i
Pres	t
sure	t
Pres	e
sure	r
Pres	S
sure	w
	i
	t
	c
	h
	S
	w
	i
	t
	c
	h
	S
	w
	i
	t
	c
	h
	S
	w
	i
	t
	c
	h
	Switch

QITX	Power Factor Indicator Transmitter	Electrical Systems
RUNC	RUN Command FORWARD	DCS
RUNF	Run Command	DCS
RUNP	Run Permissive	DCS
RUNR	Run REVERSE Command	DCS
SAHX	Overspeed Alarm	Generator System
SIXX	Speed Indication Pump	VFD panel
SCXX	SPEED Command Speed	DCS
SSLX	Switch Low	Zero Speed Switch

HRSD Functional Tag Standards and Conventions

Tag	Function	Initiating Device
TAHH	Temperature Alarm High High	Generator System
TAHX	Temperature Alarm High	Generator System
TCTX	Temperature Sensor	Thermocouple Temp
TITX	Temp Indicator Transmitter	Device Field
VAHX	Vibration Alarm High	Equipment
VITX	Vibration Transmitter Weight	Vibration Transmitter or System
WITX	Indicating Transmitter Event	Weight Transmitter
YAAX	Alarm No 1	MCC AFD, Control Panel
YABX	Event Alarm No 2	, AFD, Control Panel
YACX	Event Fail Alarm Common	MCC, AFD, Control Panel
YADX	Event Alarm No 3	MCC, AFD, Control Panel
		MCC,
YAXX	Emergency Stop Position	Field Equipment
ZCXX	Command Position	DCS
ZIXX	Indication	Position Transmitter

NOTE: Any required point type tags that are cannot be expressed using this list must be approved for use by HRSD and Emerson.

Appendix II - Word and Phrase Abbreviations

General

This Appendix describes the Plant equipment abbreviation standards. The following lists set forth the abbreviation convention for all Plant structures, equipment and devices that appear in the DCS and its related documentation. For general use, two lists are included, one sorted by word/phrase, and the other sorted by abbreviation. A third list is provided for the point Set/Reset fields.

Abbreviations are required for every aspect of a DCS project, from database definition to Alarm Lists, Trend Groups and custom graphics. Abbreviation standards are vital; however, they are difficult to enforce on large projects with many people, and with many software packages having different text length limitations. Other complications are that multiple words may require the same abbreviation, and that not all possible words can always be pre-defined in an abbreviations list.

The following guidelines shall be used when adding new abbreviations:

- For multiple words, use a common acronym, or create an acronym using the first letter of each word.
- For single words, abbreviations should be constructed to provide unique representation without need for context and intuitive interpretation for the user.
- Periods (.) should never be used in abbreviations, and other extraneous punctuation should be avoided.

Appendix III – Graphic Hierarchy

Graphics Standards are being updated to comply with ISA 101

General

This Appendix describes the Plant graphic hierarchy. The graphic hierarchy list presented on the following pages does not necessarily represent a final design, as requirements change during project approval and development. Graphic numbering is spaced for future expansion, and to provide numbering consistency between Plants. These numbers are pre-assigned and may change. Note that the graphics hierarchy and paging menus are designed such that the Operator need not be concerned with recognizing or memorizing graphic numbers.

Graphics Hierarchy

HRSD Graphics Hierarchy

Menu Name	Graphic No.	Graphic Title	Graphic Style
	Main Window	Overview	ISA 101 Level 1
Top Level Process - appears on all menus			
	2000	Plant Overview	ISA 101 Level 2
	2010	Plant Overview Table	ISA 101 Level 2
	2020	Liquid Process Overview	ISA 101 Level 2
	2030	Biosolids Process Overview	ISA 101 Level 2
	2040	Program Status Overview	Tabular
PRELIMINARY			
	2100	Preliminary Treatment Overview	ISA 101 Level 2
	2110	Influent Screening System	2D
	2120	Plant Influent Pumping System	2D
	2130	Grit Removal System	2D
	2150	Bio Solids / Septage receiving/Handling	2D
PRIMARY			
	2200	Primary Treatment Overview	ISA 101 Level 2
	2210	Primary Clarification 1/2/3	2D
	2220	Primary Clarification 4/5/6	2D
	2230	Primary Scum System	2D
	2250	Intermediate Pumping	2D

Menu Name	Graphic No. Main Window	Graphic Title	Graphic Style
SECONDARY			
	2300	Secondary Treatment Overview	ISA 101 Level 2
	2310	Aeration Basins 1/2	2D
	2320	Aeration Basins 3/4	2D
	2330	Nitrate and Anoxic Recycle Pumps	2D
	2340	Aeration Blowers	2D
	2350	Secondary Clarifiers	2D
	2360	RAS and WAS	2D
	2370	Foam Removal/ Scum Pumping	2D
CONTACT TK/EFFL			
	2500	Contact Tank/Effluent Overview	ISA 101 Level 2
ODOR CONTROL			
	2700	Odor Control Overview	ISA 101 Level 2
	2710	Odor Control Station	2D
CHEMICAL			
	2800	Chemical Systems Overview	
	2810	Hypochlorite System	
	2820	Bisulfite System	
	2830	Caustic System	
	2840	Primary Treatment Polymer System	
	2850	Secondary Treatment Polymer System	
	2860	Methanol Storage and Pumping	
	2870	Ferric Chloride system	

I
S
A
1
0
1
L
e
v
e
l
2
2
D
2D
2D
2D
2D
2D
2D

Menu Name	Graphic No. Main Window	Graphic Title	Graphic Style
Thickening			
	2900	Thickening Overview	ISA 101 Level 2
	2910	Thickener 1	2D
	2920	Thickeners 2	2D
	2970	Thickening Polymer System	
DEWATERING			
	3000	Dewatering Overview	ISA 101 Level 2
	3010	Primary Biosolids Storage and Pumping	2D
	3020	Waste Activated Biosolids Storage and Pumping	2D
	3030	Norfolk Water Solids	2D
	3040	Centrifuges Dewatering	2D
	3070	Polymer System	2D
INCINERATION			
	3100	Incineration Overview	ISA 101 Level 2D
	3110	Biosolids Conveying/FBS	2D
	3120	Incinerator 1	2D
	3140	Incinerator 2	2D
	3160	Ash Handling System	2D
NITRIFICATION			
	3195	Nitrification Enhancement Overview	ISA 101 Level 2

SAFETY/SECURITY

3300	Safety/Security	Tabular
3310	Overview Gas	Tabular

Menu Name Monitoring

Graphic No. Main Window	Graphic Title	Graphic Style

ELECTRICAL

3400	Electrical System Overview	One-line
3410	Emergency Generation Overview	One-line
3420	Generator 1	2D
3430	Generator 2	2D
3440	Generator 3	2D
3450	Generator Auxiliary Systems	2D

DCS

1800	DCS Status Overview	One-line

Appendix IV - Graphic Navigation

General

The general navigational structure between Plant Overview graphics, Unit Process Overview graphics and Unit Process graphics can be diagrammed as follows:

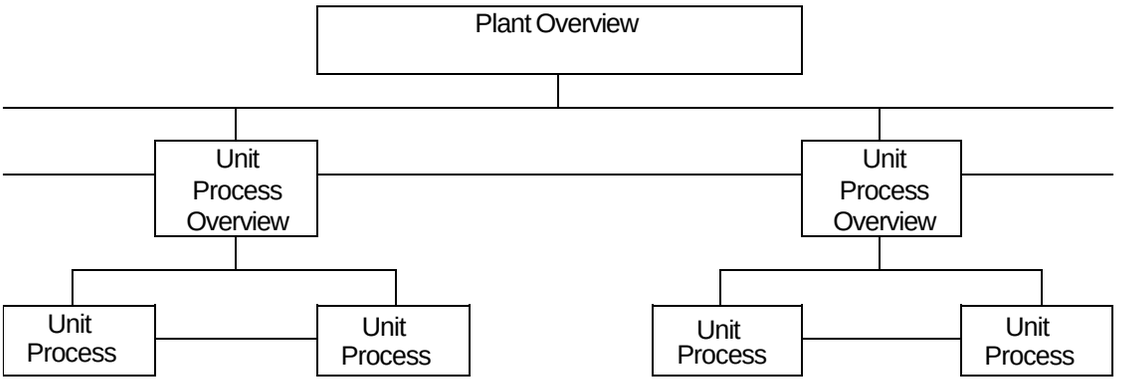

Other navigational guidelines are as follows:

- Up/Down/Left/Right paging is supplied on the graphic window's menu bar. Up/Down paging "rolls over" to stay within a single Unit Process graphic set, whereas the Left/Right paging links to other Unit Process graphic sets.
- Drop-down menu based paging is included on each graphic to allow "two-click" access to any other graphic.
- Flow lines are provided with poke field paging that connects to other graphics.
- The Top Level Paging Menu (Diagram 1000) provides a site map to the system's mainscreen graphics and is depicted in manner similar to a GUI file folder structure.

Appendix V – Graphic Display Elements

General

This Appendix describes the details of the graphic static and dynamic elements, in table format. This is followed by several examples of how these elements are combined to form standard graphic layouts.

Graphic Windows Parameters

Parameter	Comment
Design Size	1100w X 770h
Fixed/Default Size and Location	Default size and position for all main screens and pop-up windows
Resize/Zoom	Resize and zoom enabled, but not considered as normal an operator function when laying out the graphic design
Background Color	Gray40 for all main screens, gray70 for pop-up windows
Base Font	Standard ovation vector-based font
Grid	Minimum allowable size

Table V.1 - Graphic Windows Parameters

Graphic Layout Guidelines

Header Area	Comment
Title Bar	Graphic title and graphic number
Top Left Corner	Plant name, time/date
Top Right Corner	Shortcut bar with Display Menu access and Help file (.pdf) access
Custom Buttons	Pop-up graphic menu access. Menu groupings are based on graphic hierarchy.

Table V.2 - Graphic Layout Guidelines

Base Graphic Element Functions - Static Text

Function	Size	FG Color	BG Color	Comment
Engineering Units - Process Points	2	White	Same as graphic	
Engineering Units - M/A Station	1	Same as process bargraph	Same as graphic	
General Main Screen Text	1 or 2	White	Same as graphic	
Header Title Bar - Graphic Number	1	Darkgreen	Gray60	
Header Title Bar - Graphic Title	5	Darkgreen	Gray60	
Header Title Bar - Plant Name	5	Darkgreen	Gray60	
M/A Station - General Labels	2	White	Same as graphic	
M/A Station or Strategy - Control PB Labels	2	Black	Gray70	
M/A Station or Strategy - Title Line 1&2	2	Darkgreen	Gray60	
Strategy Window - Text	2	White	Same as graphic	
Table Headings and Labels	2	White	Same as graphic	

Table V.3 - Base Graphic Element Functions - Static Text

Base Graphic Element Functions - Dynamic Text

Function	Size	Text	FG Color	BG Color	Comment
Process Point	2	Dynamic Value	Green	Same as graphic	Alarm colors match the colors defined for the alarm list. Quality alarm is FG red, except for Timed Out which is FG magenta.
Main Screen or Control Window - Alarm Text or M/A Interlock	2	Derived from English Description	Gray shade varies based on BG color, normally 10 shades lighter.	Same as graphic	Alarm colors match the colors defined for the alarm list.
Main Screen - Running/ Stopped Status	2	R S	White Black	Red Green	Device shapes also turn yellow upon FAIL.
Main Screen - Open/ In Travel/ Close	2	O I C	White Black Black	Red White Green	Device shapes also turn yellow upon FAIL.
Main Screen - Open/ Close	2	O C	Black White	Green Red	Device shapes also turn yellow upon FAIL.
Main Screen - Not Ready/ Running/ Ready Sequence Status	2	N R D	Black White Black	Magenta Red Green	None None None
Main Screen - Hand/DCS Mode	2	H D	White White	Red Blue	None None
M/A Station - Manual/ Auto	2	MANUAL AUTO	White White	Red Blue	None None

Function	Size	Text	FG Color	BG Color	Comment
M/A Station - Device Status	3	STOPPED	White	Red	None
		RUNNING	Black	Green	None
		FAIL TO START	Black	Yellow	See 2nd note.
		FAIL TO STOP	Black	Yellow	See 2nd note.
		FAIL	Black	Yellow	See 2nd note.
M/A Station - Hand/DCS	2	HAND	White	Red	None
		DCS	White	Blue	None
M/A Station Manual Reject	2	MREJ	White	Red	None
M/A Station Track	2	TRACK	White	Blue	None
M/A Station - Valve Status	2	OPENED	White	Red	None
		IN TRAVEL	Black	White	None
		CLOSED	Black	Green	None
		FAIL TO OPEN	Black	Yellow	See 2nd note.
		FAIL TO CLOSE	Black	Yellow	See 2nd note.
		SWITCH FAIL	Black	Yellow	See 2nd note.
M/A Station - Breaker Status	2	OPENED	Black	Green	None
		CLOSED	White	Red	None
		FAIL TO OPEN	Black	Yellow	See 2nd note.
		FAIL TO CLOSE	Black	Yellow	See 2nd note.
		SWITCH FAIL	Black	Yellow	See 2nd note.
Strategy Control Window - Device Availability	2	Device Name (available)	White	Same as window	None
		Device Name (not available)	Gray50	Same as window	None

Function	Size	Text	FG Color	BG Color	Comment
General Dynamic Message	2	Message specific	Black	White	None
Strategy Control Window - Status	2	NOT READY	Black	Magenta	None
		RUNNING	White	Red	None
		READY	Black	Green	None
		FAIL	Black	Yellow	None
Sequence Step Window - Sequence Ready/ Not Ready/ Failed/ Selected/ Active/ Done	2	READY N	Black	Green	None
		READY	Black	Magenta	None
		FAILED	Black	Yellow	None
		SELECTED	Black	Green	None
		ACTIVE	White	Red	None
		DONE	Black	White	None

Table V.4 - Base Graphic Element Functions - Dynamic Text

Notes:

- Functions that are identical between Windows and Main Screens have identical dynamics.
- For unacknowledged alarms, the display element is reverse-video. When in alarm and acknowledged, the reverse video changes to normal, with the appropriate alarm color. No blinking is used for alarms.
- Device symbols include color dynamics that match those described for the associated dynamic text.
- Bargraphs are included on main screens where dynamic levels are displayed, and on M/A Stations. Bargraph colors match the associated process color (Appendix VI) on main screens, and match the process point colors on M/A Stations (PV - Darkgreen, SP/Bias - White, Output – Dodgerblue4, Feedback - Blue).

Base Graphic Element Functions - Lines

Function	Size	Type	FG Color	BG Color	Comment
General Use	1	Solid	White	None	None
Tables	1	Solid	White	None	None.

Table V.5 - Base Graphic Element Functions - Lines

Notes:

- Process lines follow the color standard set forth in Appendix VI. Where polygons are used as process lines, they also have a black outline.

Appendix VI - Process Colors

General

This Appendix details the standard process flow descriptions, abbreviations and associated graphic colors. Note that the Base Color specified herein is a description of the approximate color being used. In actual practice, the graphics are coded with the Custom Color Name listed. Through the operating system's "rgb.txt" color palette definition, each Custom Color Name can be modified as needed to finalize the actual RGB properties of the color to be used. These properties can be adjusted at any time, providing a simple method of fine-tuning the graphic colors for the final working environment.

The custom colors that are added to the library have the following RGB values. Cut and paste this information into the system rgb.txt file if it needs to be recreated:

58 95 205	air1
255 255 0	gas1
255 165 0	hazard1
0 245 255	sewage1
139 69 19	solids1
0 139 139	water1

Appendix VII – Graphic Macro List

General

Macro details are provided in their respective Graphic Builder source codes. The enclosed list provides a summary of the HRSD custom macros. Usage examples are provided in the form of final system main screen and Graphic Builder source codes.

Appendix VIII – Sample Graphic Types

Graphics Standards are being updated to comply with ISA 101

Appendix IX – Level 1 Control

Templates

General

Control template details are provided in their respective Control Builder ACAD drawings. The following list provides a summary of the HRSD control templates. Implementation examples are provided as part of the DCS Automation Standards – Proprietary Volume.

Control Template Types:

- MOTOR/DEVICE WITH SINGLE MOMENTARY OUTPUT
- MOTOR/DEVICE WITH SINGLE MAINTAINED START COMMAND
- MOTOR/DEVICE WITH TWO MAINTAINED START COMMANDS (TWO SPEED MOTORS REVERSABLE MOTOR)
- M/A STATION – ANALOG
- M/A STATION – PULSE
- VALVE WITH SINGLE OPEN COMMAND
- VALVE/GATE WITH TWO MAINTAINED OUTPUTS
- VALVE/GATE WITH TWO MAINTAINED OUTPUTS AND MANUAL STOP
- VALVE WITH TWO MOMENTARY OUTPUTS

Appendix X – DCU Software Mapping

General

DCU software, like many significant project activities, requires planning and coordination between multiple developers. This Appendix provides an example of DCU software mapping, which defines where each major section of control software resides.

Each Ovation DCU (controller or drop) provides the User with 999 “sheets” of control logic capacity. Once programmed and loaded into the controller, each sheet can be viewed dynamically on the DCS workstation. Each sheet is therefore subject to ergonomic guidelines and programming efficiency guidelines.

Ergonomic and programming efficiency guidelines include:

- Analog control should generally flow in a top-to-bottom/left-to-right logic flow.
- Digital control should generally flow in a left-to-right/top-to-bottom logic flow.
- Sheet I/O connectors should be kept on the edges of the sheet, except where significant programming efficiencies would result.
- Similar controls should look similar from sheet to sheet. Sheets should be copied whenever possible.
- Control loops (strategies) should be grouped. Within a group, control types should flow as follows:
    - Common logic
    - Sequential logic
    - Analog (PID) logic
    - Digital (motors, valves, etc.) logic

The enclosed listing is an example of the grouping of control loop software. A similar map shall be developed for the HRSD projects in order to provide an optimal software development environment and an ergonomic final product.

Appendix XI – Common Control Functions

(b) 1 Common Control Functions

The following sections describe some of the common control functions provided in the DCS. These functions include the base logic required to manually control any device, as well as other miscellaneous controls and calculations used in process control applications. The descriptions in this chapter are derived from the HRSD Automation Standards document. Refer to that document for more detailed descriptions, as well as sample control logic drawings.

1. Continuous Control

- This type of control provides the Operator with the capability of positioning a device throughout its full controllable range. Typical applications include modulating valve controls and VFD speed controls.

- The device can be placed in either MANUAL or AUTO mode of operation. The current selection is displayed at the respective M/A station and can be changed by pressing the respective M/A station's pushbuttons at any time, subject to the following exceptions:

  - The device is rejected to MANUAL mode when quality of the Process Variable (PV) signal is set to BAD (e.g., due to I/O card failure or input signal out of range).

  - The device is rejected to MANUAL if the LOCAL/DCS switch is not in DCS position.

  - For devices controlled via serial link, the device mode is rejected to MANUAL mode when the DATA LINK FAILURE alarm is active.

  - Specific MANUAL REJECT conditions are defined for each device (see the lists presented in each strategy section labeled "DCS Manual Control"). Upon a MANUAL REJECT condition, the DCS issues an alarm (if applicable), and the device mode is rejected to MANUAL.

- Specific TRACKING conditions are also defined for each device (see the lists presented in each strategy section labeled "DCS Manual Control"). Upon a TRACKING condition, the DCS issues an alarm (if applicable), and the Operator is not able to manually adjust the associated DCS output signal. Note that devices are able to TRACK in both the AUTO and MANUAL modes.

  - In case of speed control applications, when the device is not running, the speed is tracked to zero.

- If the respective LOCAL/DCS switch is in DCS position and the AUTO/MANUAL graphical switch at the workstation is in MANUAL mode, then subject to TRACKING conditions, the position can be directly adjusted from the DCS at the discretion of the Operator.

- If the respective LOCAL/DCS switch is in DCS position and the AUTO/MANUAL graphical switch at the workstation is in AUTO mode, then subject to TRACKING conditions, the position will typically be controlled by a PID controller, which adjusts the output based on an error signal calculated as a difference between an Operator-entered setpoint and the PV value.

- The following tracking rules are provided in order to ensure bum pless transitions between the following modes:

  - While switching from AUTO to MANUAL mode, the output will be set to the last value calculated in AUTO mode, until changed by the Operator.

APPENDIX XI - COMMON CONTROL FUNCTIONS

  - While MANUAL mode is selected, the PID algorithm's output will equal the manually entered output value, allowing for a bumpless transition from MANUAL to AUTO mode.

  - While the device LOCAL/DCS switch is not in DCS position, the DCS will track the applicable device feedback signal (typically valve position or drive speed percentage) and

set algorithm's output equal to that signal.

- For devices controlled via serial link, upon recovering from a DATA LINK FAILURE, the DCS will track the applicable device feedback signal and set algorithm's output equal to that signal.

- Application-specific tracking conditions may also apply based on the type of automatic control that is provided. A common example of this type of device tracking occurs when a higher level sequential control attempts to position a device based upon the requirements of the sequence. Refer to strategy sections labeled "DCS Automatic Control" for any applicable details.

- The device DEVIATION alarm will be activated at the DCS if, after a preset amount of time (initial value 30 seconds, Engineer adjustable) if the device feedback signal differs from the demand for more than a preset amount (initial value 5 percent, Engineer adjustable).

- When required, the M/A station output value will be characterized in order to adjust the DCS output to a specific device response curve, thus providing a linear control system response to the process.

2. Open/Stop/Close Control

- This type of control provides the Operator with the capability of basic OPEN and CLOSE functions for devices such as valves, gates or breakers. STOP functionality is included only when the associated I/O is available, allowing the Operator to select intermediate valve/gate positions.

- The device can be placed in either MANUAL or AUTO mode of operation via the graphical switch at the workstation. AUTO mode of operation enables the device to work in conjunction with a higher-level sequential control, when applicable. Note that for devices controlled via serial link, the device mode is not rejected to MANUAL when the DATA LINK FAILURE alarm is active.

- If the respective LOCAL/DCS switch is in DCS position and the AUTO/MANUAL graphical switch at the workstation is in MANUAL mode, then subject to OPEN PERMISSIVES, CLOSE PERMISSIVES and TRIPS, the device can be opened and closed from the workstation at the discretion of the Operator.

- Specific OPEN PERMISSIVE and CLOSE PERMISSIVE signals are defined for each device (see the lists presented in each strategy section labeled "DCS Manual Control"). If the PERMISSIVE is not met, then the device may not be opened or closed further.

- If the device is commanded to open by the DCS and an OPENED feedback is not received within a preset time (Engineer adjustable), the Operator will receive a FAIL TO OPEN alarm for the device. This alarm is latched at the DCS and must be RESET before the device can be opened from the DCS.

- If the device is commanded to close by the DCS and a CLOSED feedback is not received within a preset time (Engineer adjustable), the Operator will receive a FAIL TO CLOSE alarm for this device. This alarm is latched at the DCS and must be RESET before the device can be closed from the DCS.

- If at any time both OPEN and CLOSE limit switch signals are received by the DCS at the same time, the SWITCH FAILURE alarm will be set. This alarm is latched at the DCS, and this condition must be cleared before the alarm can be RESET by the Operator at the respective M/A station.

- When the RESET pushbutton is selected to clear an alarm, the device will be switched from AUTO to MANUAL mode of operation.

- For devices controlled via serial link, upon recovering from a DATA LINK FAILURE, the current device position will be tracked and the DCS command will be set accordingly to maintain the device position. Also, the device FAIL TO OPEN, FAIL TO CLOSE and SWITCH FAILURE alarms will be disabled during a DATA LINK FAILURE.

- For devices with no OPENED and/or CLOSED status feedback, the corresponding FAIL TO OPEN, FAIL TO CLOSE and SWITCH FAILURE alarms are disabled where the DCS cannot verify the device position.

3. Start/Stop Control

- This type of control provides the Operator with the capability of basic START and STOP functions for a two state device.

- The device can be placed in either MANUAL or AUTO mode of operation via the graphical switch at the workstation. AUTO mode of operation enables the device to work in conjunction with a higher level sequential control, when applicable. Note that for devices controlled via serial link, the device mode is not rejected to MANUAL when the DATA LINK FAILURE alarm is active.

- If the respective LOCAL/DCS switch is in DCS position and the AUTO/MANUAL graphical switch at the workstation is in MANUAL mode, then subject to PERMISSIVE and TRIP conditions, the device can be started and stopped from the workstation at the discretion of the Operator.

- Specific PERMISSIVE and TRIP conditions are defined for each device (see the lists presented in each strategy section labeled "DCS Manual Control"). PERMISSIVE conditions are defined as startup criteria for the device, whereas TRIP conditions are defined as running criteria for the device. In addition, either signal may incorporate an Engineer adjustable delay, as required. If the PERMISSIVE condition is not met, the DCS issues an alarm (if applicable) and prevents the device from running. However, the PERMISSIVE condition has no effect on a running device. Upon a TRIP condition, the DCS issues an alarm (if applicable), commands the device to STOP.

- If a stopped device is commanded to start by the DCS and a running feedback is not received within a preset time (initial value 5 seconds, Engineer adjustable), the Operator will receive a FAIL TO START alarm for the device. This alarm is latched at the DCS and must be RESET before the device control functions will be enabled at the DCS.

- If a running device stops while commanded to run by the DCS, the Operator will receive a FAIL TO RUN alarm for the device. This alarm is latched at the DCS and must be RESET before the device control functions will be enabled at the DCS.

- When the RESET pushbutton is selected to clear an alarm, the device will be switched from AUTO to MANUAL mode of operation.

- If a running device is commanded to stop by the DCS, and a stop feedback (removed running feedback) is not received within a preset time (Engineer adjustable), the Operator will receive a FAIL TO STOP alarm for the device. This alarm is latched at the DCS and must be RESET before the device control functions will be enabled at the DCS.

- For devices with no RUNNING status feedback, the appropriate FAIL TO RUN, FAIL TO STOP and FAIL TO START alarms are disabled since the DCS cannot verify the device status.

- After the device is stopped, the DCS imposes a RESTART DELAY to prevent the restart of that device for a preset time period (Engineer adjustable).

- The DCS provides a runtime algorithm for the device which calculates the following values:

- Total runtime - This indicates the device total accumulated runtime and cannot be RESET by the Operator.

- Current on time - This indicates the accumulated run time since the device was started for the last time. This value remains unchanged after the device is stopped and is reset when the device starts again. This calculation is for internal use, and therefore does not appear on the custom graphics.

- Maintenance runtime - This indicates the accumulated runtime since the last manual RESET by the Operator.

- For devices controlled via serial link, upon recovering from a DATA LINK FAILURE, the current device status will be tracked and the DCS command will be set accordingly to maintain the device status. Also, the device FAIL TO START, FAIL TO STOP and FAIL TO RUN alarms will be disabled during a DATA LINK FAILURE.

4. Flow Totalizer

The flow totalizer logic accumulates a flow reading over a time period, thus providing the Operator with a volume calculation for that time period.

DCS flow totalizer logic calculates three different outputs:

- Total flow - The flow value accumulated over time period since the last manual RESET initialized by the Engineer.
- Current 24 hr. flow - The flow value accumulated since last automatic RESET, which occurs at the last shift change of the day.
- Previous 24 hr. flow - The frozen flow value accumulated during previous day, which is saved when the Current 24 hour flow total is reset.

The algorithm stops accumulating flow when:

- The quality of the flow signal is set to BAD (i.e., due to I/O card failure or input signal is out of range), or
- The flow signal carries only insignificant noise, i.e., the value of the signal is lower than 5% of the signal's range (Engineer adjustable).

Click here to return to Controlwave (PSs)

Click here to return to Controlwave (TPs)

EXHIBIT S

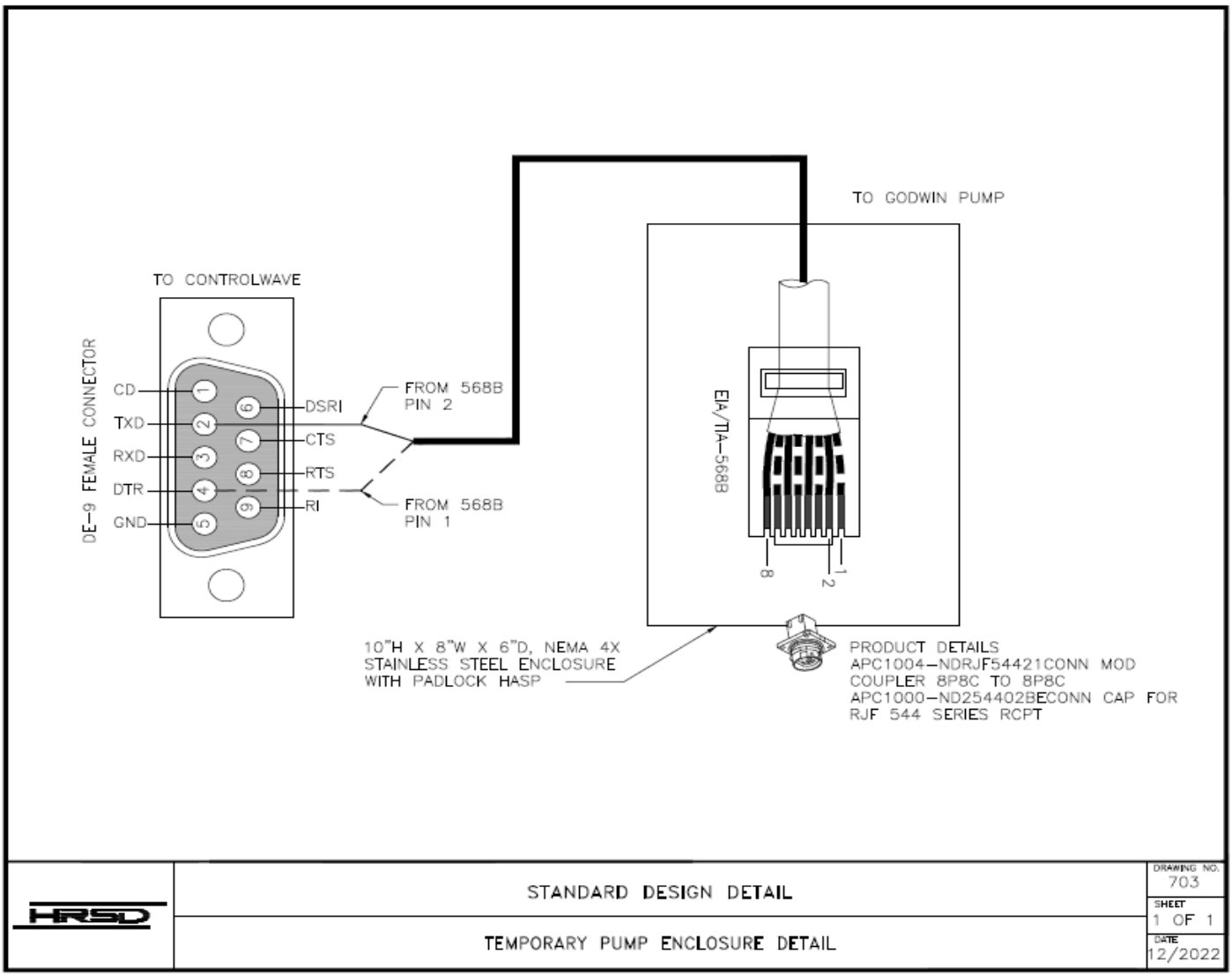

Elementary Pump Station Wiring Schematic for:

Pump Running Status to Local PLC (Control Wave) and Telog

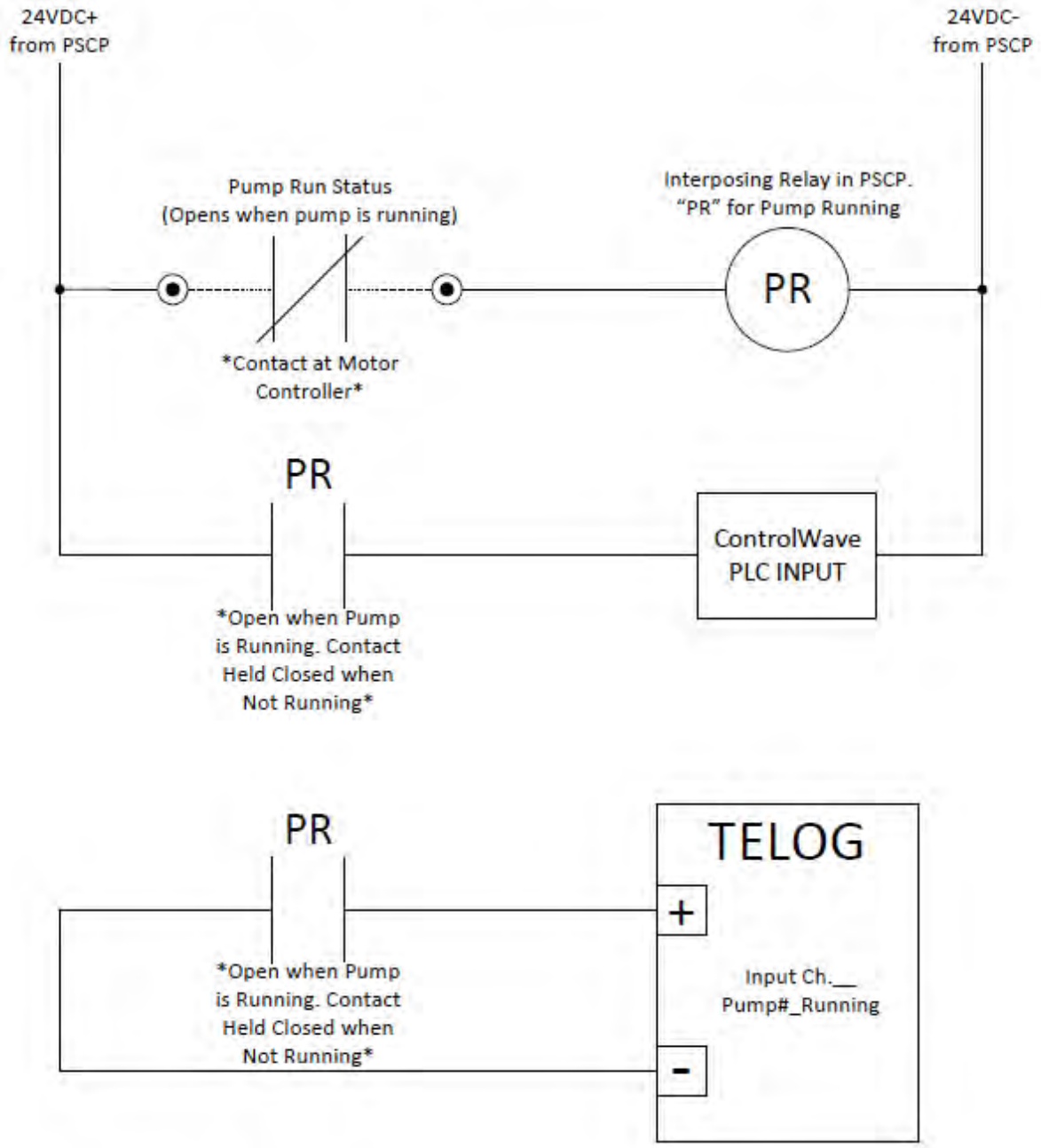

Drawn by Jared Kilgore
Date: 06-07-2022

Click here to return to Antenna (PSs)

Click here to return to Antenna (TPs)

EXHIBIT T

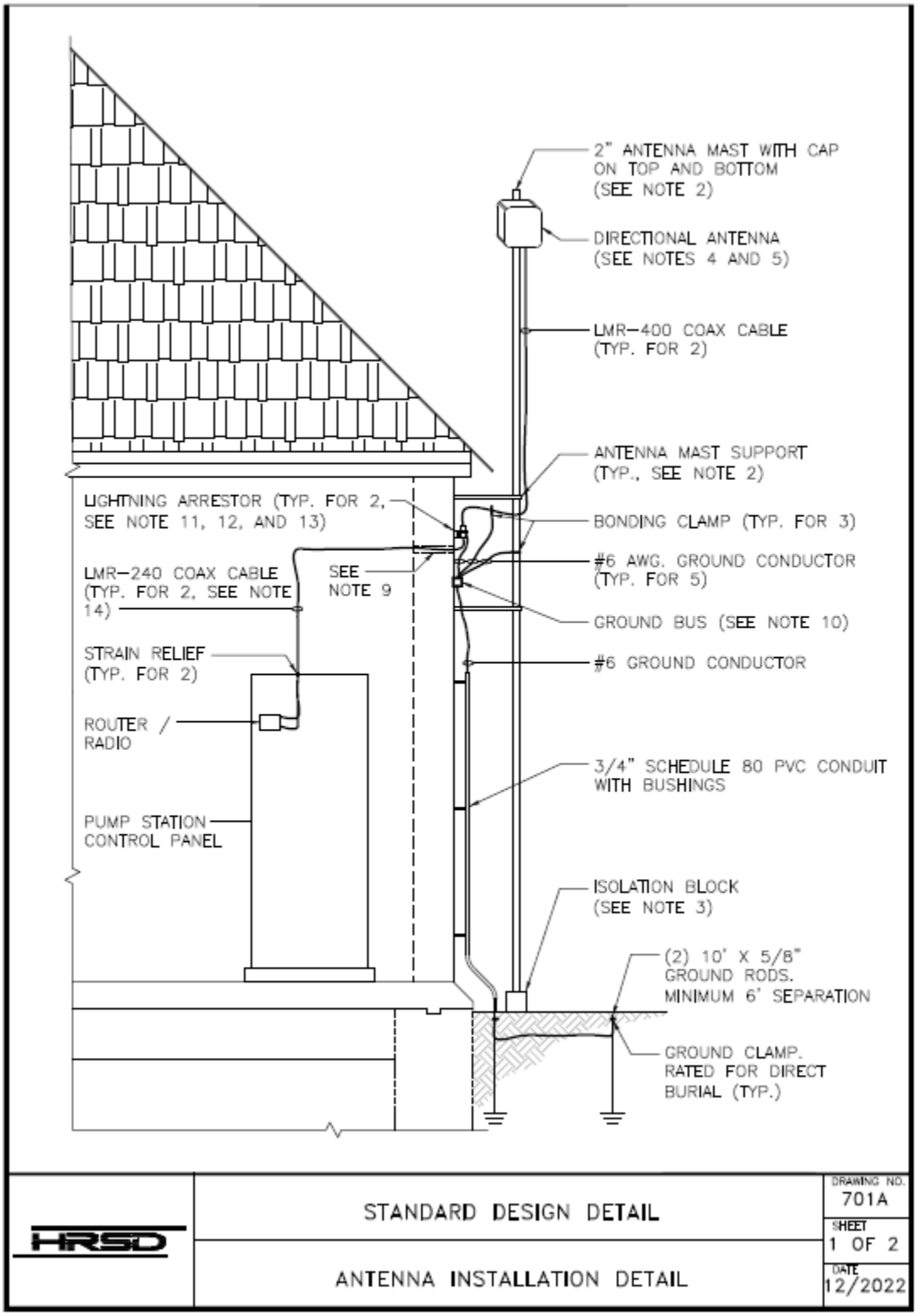

NOTES:

1. ANY DEVIATIONS FROM THIS DETAIL SHALL BE COORDINATED WITH HRSD OR HRSD'S REPRESENTATIVE.
2. ALL FASTENERS AND MOUNTING HARDWARE USED FOR INSTALLATION OF ELECTRICAL ITEMS SHALL BE OF THE SAME MATERIAL, GALVANIZED STEEL OR STAINLESS STEEL.
3. GALVANIZED STEEL ANTENNA MASTS SHALL NOT COME IN DIRECT CONNECT WITH THE GROUND. PROVIDE A BLOCK FOR ISOLATION IF REQUIRED.
4. DIRECTIONAL ANTENNA SHALL BE INSTALLED AT THE PROPER HEIGHT AND AZIMUTH ACCORDING TO THE SITE SURVEY.
5. DIRECTIONAL ANTENNA SHALL BE MOBILE MARK #PND10–700/2700.
6. COAX CABLE CONNECTORS SHALL BE INSTALLED PER MANUFACTURER REQUIREMENTS. SOLDERED CONNECTIONS ARE PREFERRED, CRIMP AND CAPTIVATED CONNECTIONS WILL BE ACCEPTED WHEN NECESSARY.
7. COAX CABLE CONNECTORS SHALL BE WEATHERPROOFED USING HEAT SHRINK OR COLD SHRINK TUBING, ELECTRICAL TAPE IS NOT ACCEPTABLE.
8. SUPPORT CONDUIT, COAX CABLE, AND GROUND CONDUCTORS AS REQUIRED PER THE NEC.
9. THROUGH WALL PENETRATION SHALL INCLUDE A SUITABLE SLEEVE. SEAL BETWEEN WALL AND SLEEVE. SEAL INTERIOR OF SLEEVE AFTER INSTALLATION OF THE COAX CABLES.
10. RUN A #6 GROUND CONDUCTOR FROM THE GROUND BUS TO THE BUILDING GROUNDING ELECTRODE SYSTEM. CONNECTION TO A SUPPLEMENTAL GROUND IS NOT ACCEPTABLE.
11. LIGHTNING ARRESTORS SHALL BE POLYPHASER #TSX–DFF OR #TSX–NFF MOUNTED ON THE OUTSIDE OF THE PUMP STATION NEAREST TO THE COAX CABLE POINT OF ENTRY USING AN APPROVED MOUNTING BRACKET.
12. GROUND CONDUCTORS FROM THE LIGHTNING ARRESTOR TO THE GROUND BUS SHALL NOT EXCEED 36 INCHES.
13. LIGHTNING ARRESTORS TO BE MOUNTED ON OUTSIDE OF BUILDING.
14. LMR–240 CABLE SHALL NOT EXCEED 75 LINEAR FEET.
15. COAX CABLE CONNECTORS AT THE ROUTER / RADIO SHALL BE TNC MALE CONNECTORS.

HRSD	STANDARD DESIGN DETAIL	DRAWING NO. 701B
		SHEET 2 OF 2
	ANTENNA INSTALLATION DETAIL	DATE 12/2022

Click here to return to Wet Well Detail (PSs)

Click here to return to Wet Well Detail (TPs)

EXHIBIT U

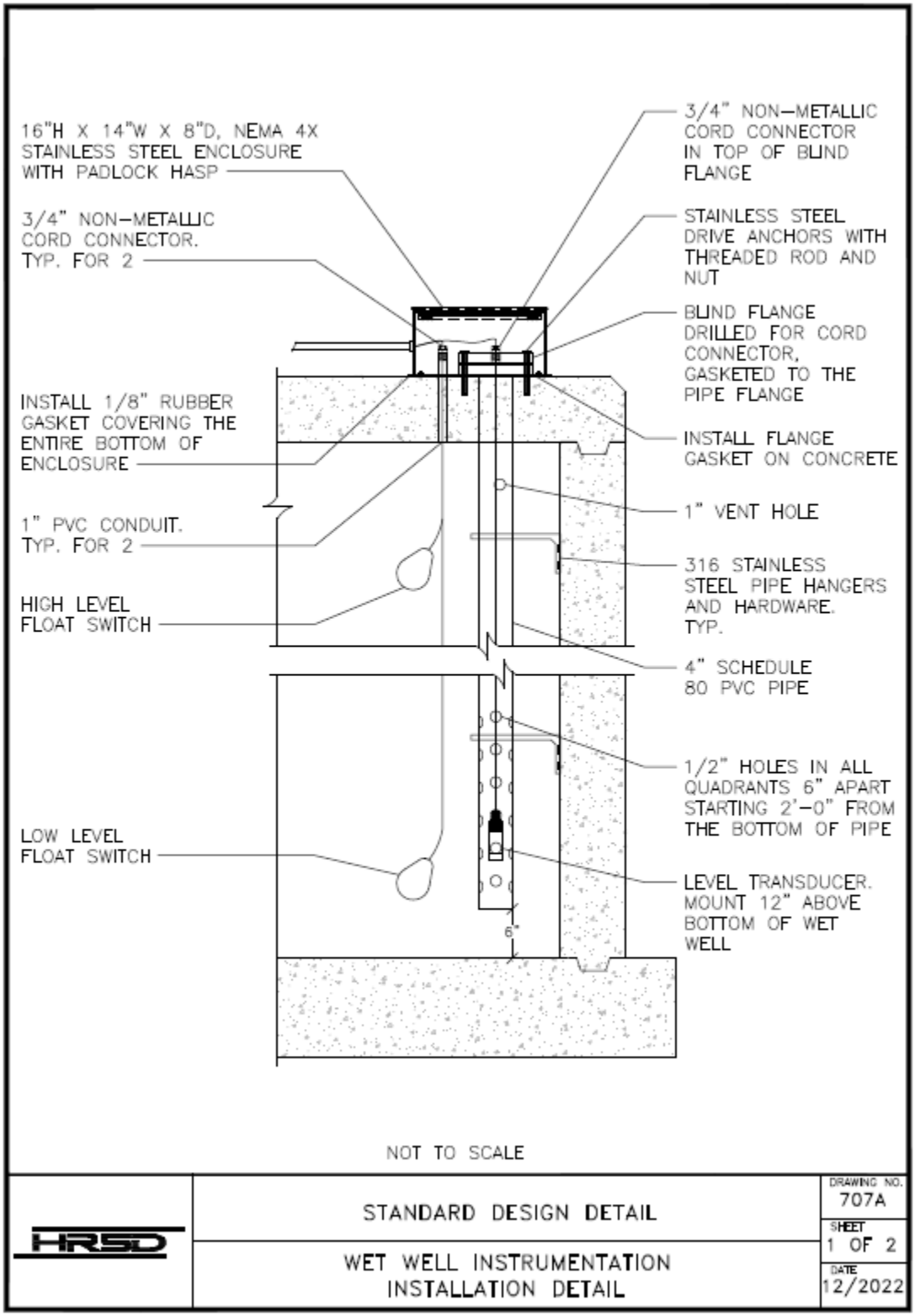

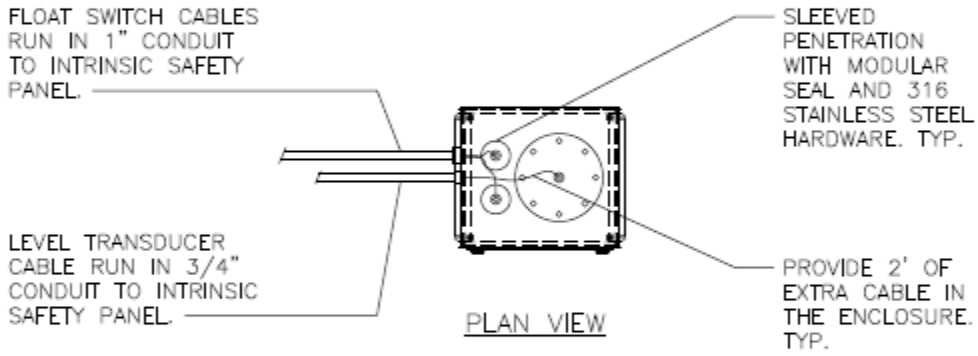

NOT TO SCALE

HRSD	STANDARD DESIGN DETAIL	DRAWING NO. 707B
	WET WELL INSTRUMENTATION INSTALLATION DETAIL	SHEET 2 OF 2
		DATE 12/2022

Click here to return to Intrinsic Safety Panel (PSs)

Click here to return to Intrinsic Safety Panel (TPs)

EXHIBIT V

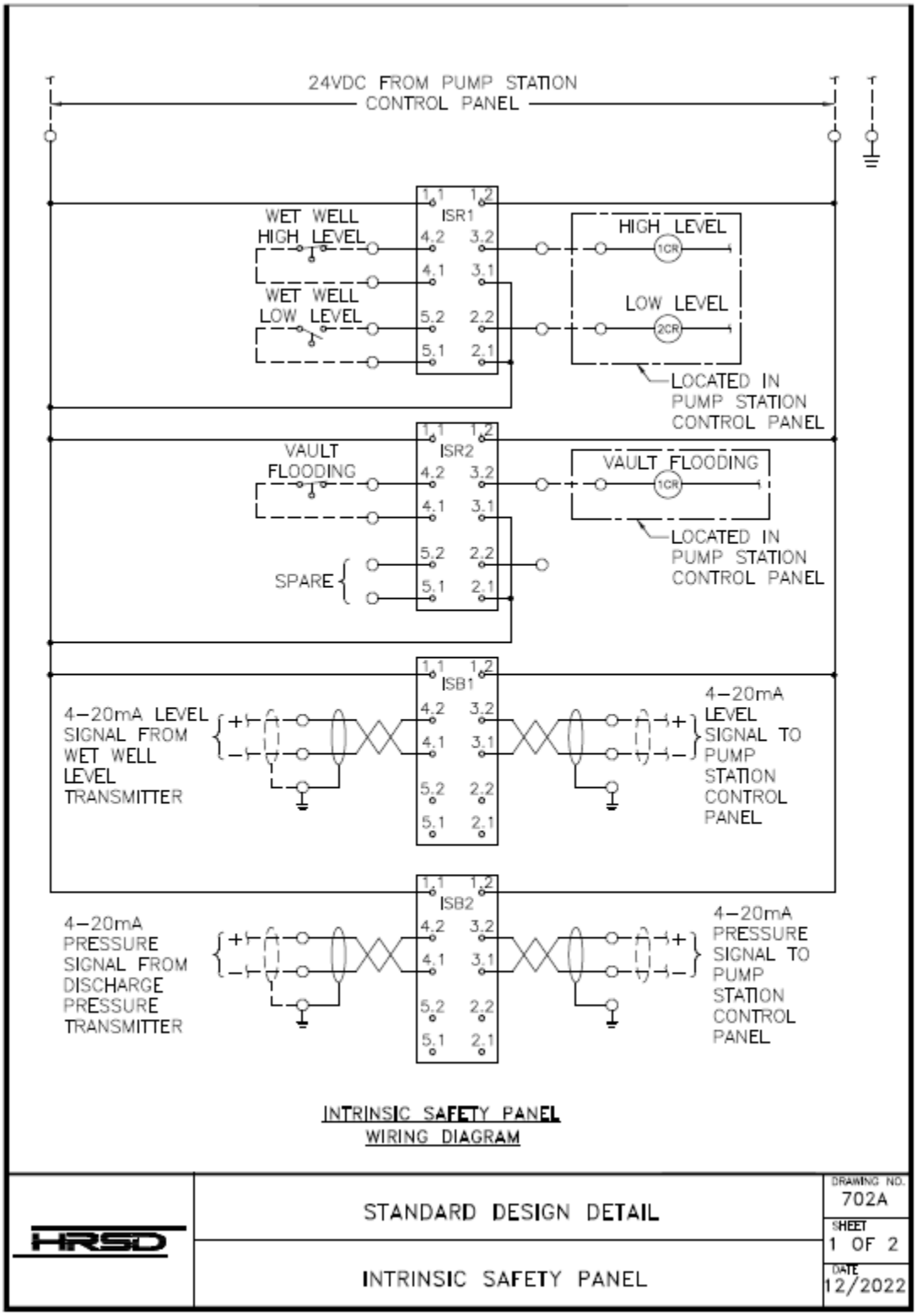

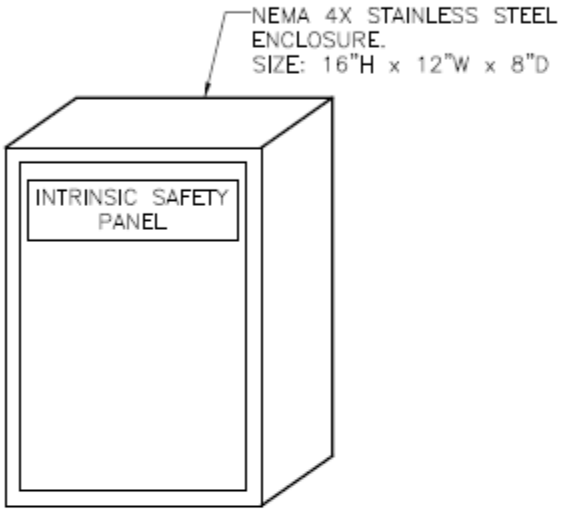

INTRINSIC SAFETY PANEL
PANEL LAYOUT

NOTES:

1. INTRINSIC SAFETY PANEL SHALL BE MOUNTED ON OUTSIDE OF BUILDING OR EQUIPMENT RACK.
2. CONDUITS FROM TRANSDUCER AND FLOAT SWITCH CABLES ENTERING INTRINSIC SAFETY PANEL REQUIRE NO SEAL OFF FITTINGS.
3. CONDUITS LEAVING INTRINSIC SAFETY PANEL GOING TO PUMP CONTROL PANEL SHALL HAVE SEAL OFF FITTINGS.

HRSD	STANDARD DESIGN DETAIL	DRAWING NO. 702B
		SHEET 2 OF 2
	INTRINSIC SAFETY PANEL	DATE 12/2022

Click here to return to Junction Box (PSs)

Click here to return to Junction Box (TPs)

EXHIBIT W

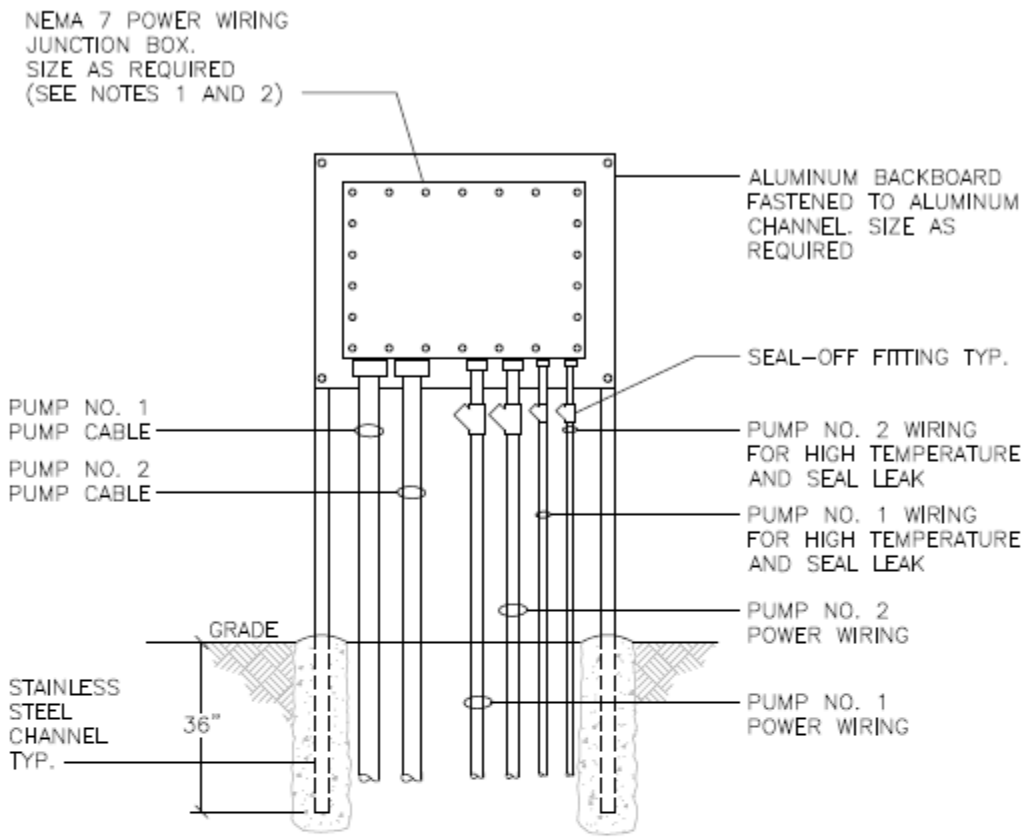

NOTES:

1. PUMP CABLE WIRES SHALL BE SPLICED IN THE POWER WIRING JUNCTION BOX USING INSULATED MECHANICAL LUGS.
2. PROVIDE A MINIMUM OF 2' OF CABLE SLACK IN THE JUNCTION BOX.
3. THE INSTRUMENT VAULT AND VALVE VAULT ARE CLASSIFIED AS A CLASS 1, DIVISION 2, GROUP D AREA IN ACCORDANCE WITH NFPA 820. THE INSTALLATION OF ALL ELECTRICAL EQUIPMENT AND CONDUIT SHALL BE PERFORMED IN ACCORDANCE WITH THIS CLASSIFICATION.
4. ALL CONDUIT PENETRATIONS THROUGH CONCRETE STRUCTURES SHALL BE INSTALLED THROUGH SLEEVED PENETRATIONS WITH MODULAR SEALS AND 316 STAINLESS STEEL HARDWARE.

NOT TO SCALE

HRSD	STANDARD DESIGN DETAIL	DRAWING NO. 700
	WET WELL PUMP WIRING ELECTRICAL BACKBOARD DETAIL	SHEET 1 OF 1
		DATE 12/2022

Click here to return to Vault Plans (PSs)

Click here to return to Vault Plans (TPs)

EXHIBIT X

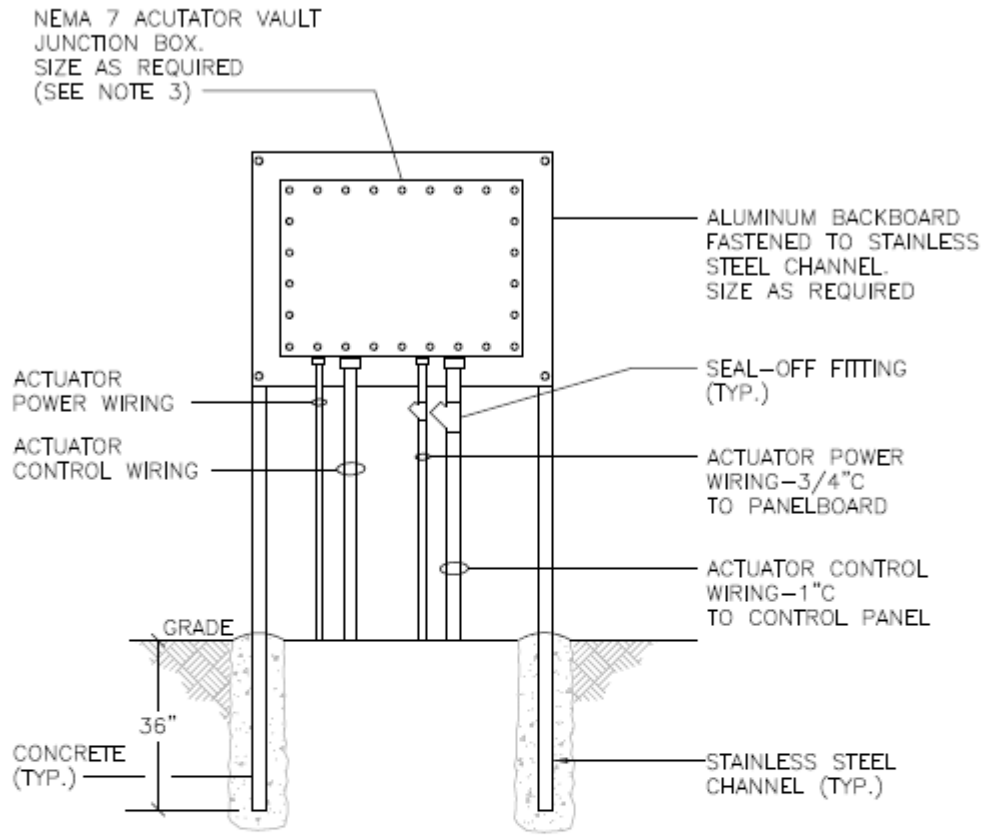

NOTES:

1. THE INSTRUMENT VAULT AND VALVE VAULT ARE CLASSIFIED AS A CLASS 1, DIVISION 2, GROUP D AREA IN ACCORDANCE WITH NFPA 820. THE INSTALLATION OF ALL ELECTRICAL EQUIPMENT AND CONDUIT SHALL BE PERFORMED IN ACCORDANCE WITH THIS CLASSIFICATION.
2. ALL CONDUIT PENETRATIONS THROUGH CONCRETE STRUCTURES SHALL BE INSTALLED THROUGH SLEEVED PENETRATIONS WITH MODULAR SEALS AND 316 STAINLESS STEEL HARDWARE.
3. PROVIDE A BARRIER BETWEEN POWER AND CONTROL WIRING.

NOT TO SCALE

HRSD	STANDARD DESIGN DETAIL	DRAWING NO. 704
		SHEET 1 OF 1
	ACTUATOR VAULT ELECTRICAL BACKBOARD DETAIL	DATE 12/2022

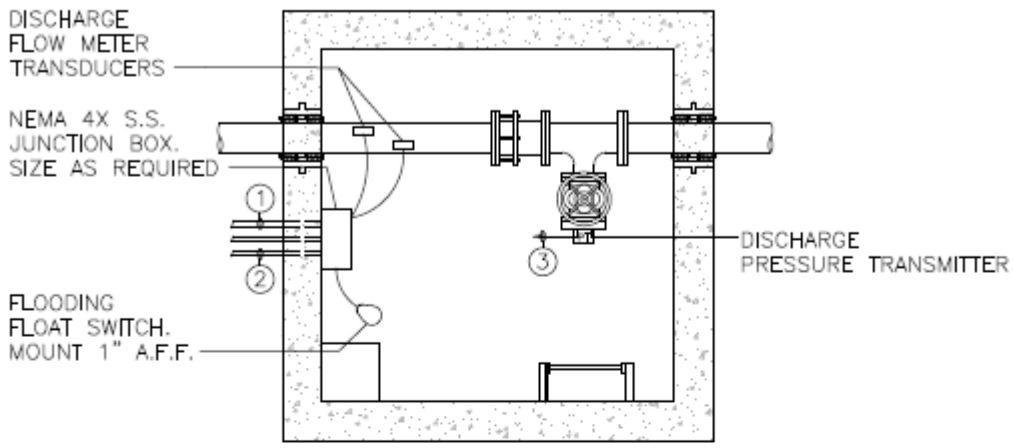

WIRING LEGEND:

1. DISCHARGE FLOW METER TRANSDUCER CABLES–1"C TO DISCHARGE FLOW METER TRANSMITTER
2. 2#14–3/4"C TO INTRINSIC SAFETY PANEL
3. 1 PR. #18 SHLD. TO INTRINSIC SAFETY PANEL. RUN IN 3/4"C TO JUNCTION BOX IN INSTRUMENT VAULT AND IN 3/4" TO INTRINSIC SAFETY PANEL

NOTES:

1. THE INSTRUMENT VAULT AND VALVE VAULT ARE CLASSIFIED AS A CLASS 1, DIVISION 2, GROUP D AREA IN ACCORDANCE WITH NFPA 820. THE INSTALLATION OF ALL ELECTRICAL EQUIPMENT AND CONDUIT SHALL BE PERFORMED IN ACCORDANCE WITH THIS CLASSIFICATION.
2. ALL CONDUIT PENETRATIONS THROUGH CONCRETE STRUCTURES SHALL BE INSTALLED THROUGH SLEEVED PENETRATIONS WITH MODULAR SEALS AND 316 STAINLESS STEEL HARDWARE.
3. PROVIDE A BARRIER BETWEEN POWER AND CONTROL WIRING.

NOT TO SCALE

HRSD	STANDARD DESIGN DETAIL	DRAWING NO. 705
		SHEET 1 OF 1
	INSTRUMENT VAULT ELECTRICAL PLAN	DATE 12/2022

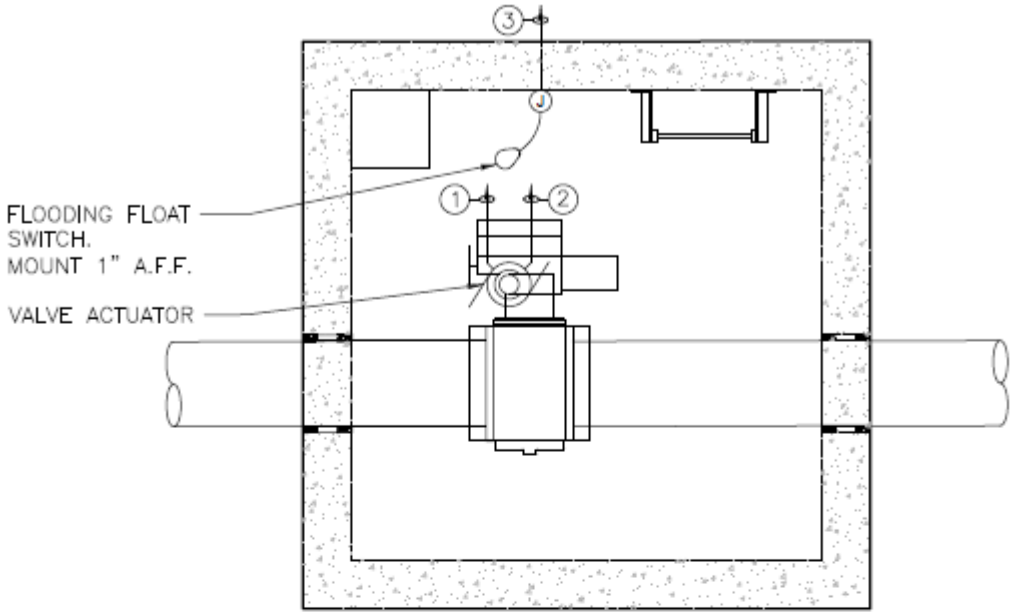

WIRING LEGEND:

1. ACTUATOR POWER WIRING–3/4"C TO ACTUATOR VAULT JUNCTION BOX
2. ACTUATOR CONTROL WIRING–1"C TO ACTUATOR VAULT JUNCTION BOX
3. 2#14–3/4"C TO INTRINSIC SAFETY PANEL

NOTES:

1. THE INSTRUMENT VAULT AND VALVE VAULT ARE CLASSIFIED AS A CLASS 1, DIVISION 2, GROUP D AREA IN ACCORDANCE WITH NFPA 820. THE INSTALLATION OF ALL ELECTRICAL EQUIPMENT AND CONDUIT SHALL BE PERFORMED IN ACCORDANCE WITH THIS CLASSIFICATION.
2. ALL CONDUIT PENETRATIONS THROUGH CONCRETE STRUCTURES SHALL BE INSTALLED THROUGH SLEEVED PENETRATIONS WITH MODULAR SEALS AND 316 STAINLESS STEEL HARDWARE.
3. PROVIDE A BARRIER BETWEEN POWER AND CONTROL WIRING.

NOT TO SCALE

HRSD	STANDARD DESIGN DETAIL	DRAWING NO. 706
		SHEET 1 OF 1
	ACTUATOR VAULT ELECTRICAL PLAN	DATE 12/2022

Click here to return to Building Classification (PSs)

Click here to return to Building Classification (TPs)

EXHIBIT Y

Table 4.2.2 Collection Systems

Row[a]	Line[a]	Location and Function	Fire and Explosion Hazard	Ventilation[b]	Extent of Classified Area	NEC Area Electrical Classification (All Class I, Group D)	Materials of Construction[c]	Fire Protection Measures
1		MATERIALS USED IN REHABILITATION, RECONSTRUCTION, OR SLIP-LINING OF SEWERS	N/A	N/A	N/A	N/A	In accordance with 8.3.5	N/A
2		INDUSTRIAL SEWER Sewer transporting industrial wastewater only (no sanitary wastewater)	Not included within the scope of this standard					
3		STORM SEWER Sewer transporting storm water only (no sanitary wastewater)	Possible ignition of flammable gases and floating flammable liquids	NNV	Inside of sewer	Division 2	In accordance with 8.3.5	NR
4		STORM WATER PUMPING STATION WET WELLS Liquid side of pumping station serving only a storm sewer system	Possible ignition of flammable gases and floating flammable liquids	NNV	Entire room or space	Division 2	NC, LC, or LFS	NR
5	a	STORM WATER PUMPING STATION DRY WELLS Dry side of a pumping station serving only a storm sewer system and physically separated from wet well	Buildup of vapors from flammable or combustible liquids	D	Entire dry well	Division 2	NC, LC, or LFS	FE
	b			C	Entire dry well	Unclassified	NC, LC, or LFS	FE
6		PRESSURE SEWER (Force main) Sewer under pressure (flooded discharge pipe from pump or tank)	Not included within the scope of this standard					
7		BUILDING SEWER (Lateral sewer or drain) Sewer serving a house or single building (plumbing)	Not included within the scope of this standard					
8		INDIVIDUAL RESIDENTIAL SEWER Sewer serving one or more individual residences with a total flow of not more than 1500 gallons per day (gpd)	N/A	NNV	Within enclosed space	Unclassified	NR	NR
9		INDIVIDUAL RESIDENTIAL PUMPING UNITS Pumping units serving one or more individual residences with a total flow of not more than 1500 gallons per day (gpd) (e.g., grinder pumps, septic tank effluent pumps, ejector pumps)	N/A	NNV	Within enclosed space	Unclassified	NR	NR
10	a	RESIDENTIAL SEWER Sewer transporting primarily residential wastewater	Possible ignition of flammable gases and floating flammable liquids	NNV	Within enclosed space	Division 2	In accordance with 8.3.5	NR
	b			B	Within enclosed space	Unclassified	In accordance with 8.3.5	NR

(continues)

Table 4.2.2 *Continued*

Row[a]	Line[a]	Location and Function	Fire and Explosion Hazard	Ventilation[b]	Extent of Classified Area	*NEC* Area Electrical Classification (All Class I, Group D)	Materials of Construction[c]	Fire Protection Measures
11	a	RESIDENTIAL WASTEWATER PUMPING STATION WET WELL Pumping station transporting primarily residential wastewater	Possible ignition of flammable gases and floating flammable liquids	A	Entire room or space	Division 2	NC, LC, or LFS	CGD
	b			B	Entire room or space	Unclassified	NC, LC, or LFS	CGD
12	a	RESIDENTIAL WASTEWATER PUMPING STATION DRY WELL Dry side of a pumping station transporting primarily residential wastewater	Buildup of vapors from flammable or combustible liquids	D	Entire room or space	Division 2	NC, LC, or LFS	FE
	b			C	Entire room or space	Unclassified	NC, LC, or LFS	FE
13		OUTFALL SEWER Final discharge pipe from a treatment plant, transporting treated wastewater	N/A	NNV	N/A	Unclassified	NR	NR
14	a	SANITARY SEWER Sewer transporting domestic, commercial, and industrial wastewater	Possible ignition of flammable gases and floating flammable liquids	NNV	Inside of sewer	Division 1	In accordance with 8.3.5	NR
	b			B	Inside of sewer	Division 2	In accordance with 8.3.5	NR
15	a	COMBINED SEWER Sewer transporting domestic, commercial, and industrial wastewater and storm water	Possible ignition of flammable gases and floating flammable liquids	NNV	Inside of sewer	Division 1	In accordance with 8.3.5	NR
	b			B	Inside of sewer	Division 2	In accordance with 8.3.5	NR
16	a	WASTEWATER PUMPING STATION WET WELLS Liquid side of a pumping station serving a sanitary sewer or combined system	Possible ignition of flammable gases and floating flammable liquids	A	Entire room or space	Division 1	NC, LC, or LFS	CGD required if mechanically ventilated or opens into a building interior
	b			B	Entire room or space	Division 2	NC, LC, or LFS	CGD
17	a	BELOWGRADE OR PARTIALLY BELOWGRADE WASTEWATER PUMPING STATION DRY WELL Pump room physically separated from wet well; pumping of wastewater from a sanitary or combined sewer system through closed pumps and pipes	Buildup of vapors from flammable or combustible liquids	C	Entire space or room	Unclassified	NC, LC, or LFS	FE
	b			D	Entire space or room	Division 2	NC, LC, or LFS	FE
18		ABOVEGRADE WASTEWATER PUMPING STATION Pump room physically separated with no personnel access to wet well; pumping of wastewater from a sanitary or combined sewer system through closed pumps and pipes	N/A	NR	N/A	Unclassified	NC, LC, or LFS	FE

(continues)

Table 4.2.2 *Continued*

Row[a]	Line[a]	Location and Function	Fire and Explosion Hazard	Ventilation[b]	Extent of Classified Area	*NEC* Area Electrical Classification (All Class I, Group D)	Materials of Construction[c]	Fire Protection Measures
19	a	ABOVEGRADE WASTEWATER PUMPING STATION Pump room not physically separated from wet well; pumping of wastewater from a sanitary or combined sewer system through closed pumps and pipes	Possible ignition of flammable gases and floating flammable liquids	A	Entire space or room	Division 1	NC	FE
	b			B	Entire space or room	Division 2	NC, LC, or LFS	FE
20	a	ODOR-CONTROL AND VENTILATION SYSTEMS SERVING CLASSIFIED AREAS	Leakage and ignition of flammable gases and vapors	D	Entire area if enclosed	Division 2	NC, LC, or LFS	CGD and FDS
	b			C	Areas within 0.9 m (3 ft) of leakage sources such as fans, dampers, flexible connections, flanges, pressurized unwelded ductwork, and odor-control vessels	Division 2	NC, LC, or LFS	CGD and FDS
	c			C	Areas beyond 0.9 m (3 ft)	Unclassified	NC, LC, or LFS	CGD and FDS
	d			Not enclosed, open to the atmosphere	Areas within 0.9 m (3 ft) of leakage sources such as fans, dampers, flexible connections, flanges, pressurized unwelded ductwork, and odor-control vessels	Division 2	NC, LC, LFS	FE
	e			Not enclosed, open to the atmosphere	Areas beyond 0.9 m (3 ft)	Unclassified	NC,LC, LFS	FE
21	a	MAINTENANCE HOLES Access to sewer for personnel entry	Possible ignition of flammable gases and floating flammable liquids	NNV	Inside	Division 1	In accordance with 8.3.5	NR
	b			B	Inside	Division 2	In accordance with 8.3.5	NR
22	a	JUNCTION CHAMBERS Structure where sewers intersect	Buildup of vapors from flammable or combustible liquids	NNV	Inside	Division 1	In accordance with 8.3.5	NR
	b			B	Open and above grade or inside and ventilated	Division 2	In accordance with 8.3.5	NR
23		INVERTED SIPHONS Depressed section of gravity sewer	Possible ignition of flammable gases and floating flammable liquids	NNV	Interior of inlet and outlet structures	Division 1	NC	NR
24		CATCH BASINS (Curb inlet) Inlet where street water enters a storm or combined sewer	Buildup of vapors from flammable or combustible liquids	NNV	Enclosed space	Division 1	In accordance with 8.3.5	NR

(continues)

Table 4.2.2 *Continued*

Row[a]	Line[a]	Location and Function	Fire and Explosion Hazard	Ventilation[b]	Extent of Classified Area	*NEC* Area Electrical Classification (All Class I, Group D)	Materials of Construction[c]	Fire Protection Measures
25	a	RESIDENTIAL DIVERSION STRUCTURES Enclosed structures where residential wastewater can be diverted	Buildup of vapors from flammable or combustible liquids	NNV	Enclosed space	Division 2	In accordance with Chapter 8	NR
	b			B	Enclosed space	Unclassified	In accordance with Chapter 8	NR
26	a	RESIDENTIAL BELOWGRADE VALVE VAULT With an exposed residential wastewater surface	Possible ignition of gases and floating flammable liquids	NNV	Enclosed space	Division 2	In accordance with 8.3.5	NR
	b			B	Enclosed space	Unclassified	In accordance with 8.3.5	NR
27	a	RESIDENTIAL CONTROL STRUCTURES Enclosed structures where residential wastewater flow is regulated	Buildup of vapors from flammable or combustible liquids	A	Enclosed space	Division 2	In accordance with Chapter 8	NR
	b			B	Enclosed space	Unclassified	In accordance with Chapter 8	NR
28	a	RESIDENTIAL BELOWGRADE METERING VAULT With an exposed residential wastewater surface	Possible ignition of flammable gases and floating flammable liquids	NNV	Enclosed space	Division 2	In accordance with 8.3.5	NR
	b			B	Enclosed space	Unclassified	In accordance with 8.3.5	NR
29	a	DIVERSION STRUCTURES Enclosed structures where wastewater can be diverted	Buildup of vapors from flammable or combustible liquids	NNV	Enclosed space	Division 1	In accordance with Chapter 8	NR
	b			B		Division 2	In accordance with Chapter 8	NR
30		ABOVEGRADE VALVE VAULT Physically separated from the wet well; valves in vault in closed piping system	N/A	NR	N/A	Unclassified	NC, LC, or LFS	NR
31	a	BELOWGRADE VALVE VAULT Physically separated from the wet well and with closed piping system	Buildup of vapors from flammable or combustible liquids	NNV	Enclosed space	Division 2	NC, LC, or LFS	NR
	b			C	Enclosed space	Unclassified	NC, LC, or LFS	NR
32	a	BELOWGRADE VALVE VAULT With an exposed wastewater surface	Possible ignition of gases and floating flammable liquids	NNV	Enclosed space	Division 1	NC	NR
	b			B	Enclosed space	Division 2	NC, LC, or LFS	NR
33	a	CONTROL STRUCTURES Enclosed structures where wastewater or storm water flow is regulated	Buildup of vapors from flammable or combustible liquids	A	Enclosed space	Division 1	In accordance with Chapter 8	NR
	b			B	Enclosed space	Division 2	In accordance with Chapter 8	NR
34	a	WASTEWATER HOLDING BASINS Enclosed structures temporarily holding untreated or partially treated wastewater	Possible ignition of flammable gases and floating flammable liquids	A	Enclosed space	Division 1	NC	NR
	b			B	Enclosed space	Division 2	NC, LC, or LFS	NR

(continues)

Table 4.2.2 *Continued*

Row[a]	Line[a]	Location and Function	Fire and Explosion Hazard	Ventilation[b]	Extent of Classified Area	*NEC* Area Electrical Classification (All Class I, Group D)	Materials of Construction[c]	Fire Protection Measures
35		WASTEWATER HOLDING BASINS, LINED OR UNLINED Open structures holding storm water, combined wastewater, untreated or partially treated wastewater	NR	NR	NR	NR	NR	NR
36	a	BELOWGRADE METERING VAULT Physically separated from the wet well and with closed piping system	Buildup of vapors from flammable or combustible liquids	NNV	Enclosed space	Division 2	NC, LC, or LFS	NR
	b			C	Enclosed space	Unclassified	NC, LC, or LFS	NR
37	a	BELOWGRADE METERING VAULT With an exposed wastewater surface	Possible ignition of flammable gases and floating flammable liquids	NNV	Enclosed space	Division 1	NC	NR
	b			B	Enclosed space	Division 2	NC, LC, or LFS	NR
38		COARSE AND FINE SCREEN FACILITIES *(See "Coarse and Fine Screen Facilities" in Table 5.2.2.)*						

Note: The following codes are used in this table:
A: No ventilation or ventilated at less than 12 air changes per hour
B: Continuously ventilated at 12 changes per hour
C: Continuously ventilated at six air changes per hour
CGD: Combustible gas detection system
D: No ventilation or ventilated at less than six air changes per hour
FDS: Fire detection system
FE: Portable fire extinguisher
LC: Limited-combustible material
LFS: Low flame spread index material
N/A: Not applicable
NC: Noncombustible material
NEC: In accordance with *NFPA 70*
NNV: Not normally ventilated
NR: No requirement

[a]The "Row" and "Line" columns are used to refer to specific figures in A.4.2 and specific requirements for each location and function.
[b]This column indicates the ventilation requirements for processes. Additional ventilation requirements are provided in Chapter 9. Ventilation signaling and alarm requirements are provided in Chapter 7.
[c]This column indicates the materials of construction for processes. Materials of construction for buildings in which these processes are housed are in accordance with the applicable building code and construction requirements provided in Chapter 8.

Click here to return to Building Classification (PSs)

Click here to return to Building Classification (TPs)

EXHIBIT Z

Table 5.2.2 Liquid Stream Treatment Processes

Row[a]	Line[a]	Location and Function	Fire and Explosion Hazard	Ventilation[b]	Extent of Classified Area[c]	NEC Area Electrical Classification (All Class I, Group D)[d]	Materials of Construction[e]	Fire Protection Measures
1	a	DIVERSION AND CONTROL STRUCTURES Not preceded by primary treatment	Possible ignition of flammable gases and floating flammable liquids	A	Enclosed—entire space	Division 1	NC	FE, H; CGD if enclosed in building
	b			B	Enclosed—entire space	Division 2	NC, LC, or LFS	FE, H; CGD if enclosed in a building
	c			Not enclosed, open to atmosphere	Within a 3 m (10 ft) envelope around equipment and open channel	Division 2	NC, LC, or LFS	FE and H
2	a	COARSE AND FINE SCREEN FACILITIES Removal of screenings from raw wastewater	Possible ignition of flammable gases and floating flammable liquids	A	Enclosed—entire space	Division 1	NC	FE, H, CGD
	b			B	Enclosed—entire space	Division 2	NC, LC, or LFS	FE, H, CGD
	c			Not enclosed, open to atmosphere	Within a 3 m (10 ft) envelope around equipment and open channel	Division 2	NC, LC, or LFS	FE, H
3		PUMPING STATIONS, DIVERSION STRUCTURES AND CONTROL STRUCTURES *(See Table 4.2.2.)*						
4	a	FLOW EQUALIZATION TANKS Storage of raw or partially treated wastewater	Possible ignition of flammable gases and floating flammable liquids	A	Enclosed—entire space	Division 1	NC	FE, H;CGD if enclosed in a building
	b			B	Enclosed—entire space	Division 2	NC, LC, or LFS	FE, H; CGD if enclosed in a building
	c			Not enclosed, open to atmosphere	Within a 3 m (10 ft) envelope around equipment and open channel[f,g]	Division 2	NC, LC, or LFS	FE, H
5	a	GRIT REMOVAL TANKS Separation of grit from raw wastewater	Possible ignition of flammable gases and floating flammable liquids	A	Enclosed—entire space	Division 1	NC	FE, H;CGD if enclosed in a building
	b			B	Enclosed—entire space	Division 2	NC, LC, or LFS	FE, H; CGD if enclosed in a building
	c			Not enclosed, open to atmosphere	Within a 3 m (10 ft) envelope around equipment and open channel[f,g]	Division 2	NC, LC, or LFS	FE, H
6	a	PRE-AERATION TANKS Conditioning of wastewater prior to further treatment	Possible ignition of flammable gases and floating flammable liquids	A	Enclosed—entire space	Division 1	NC	H;CGD if enclosed in a building
	b			B	Enclosed—entire space	Division 2	NC, LC, or LFS	H; CGD if enclosed in a building
	c			Not enclosed, open to atmosphere	Within a 3 m (10 ft) envelope around equipment and open channel[f,g]	Division 2	NC, LC, or LFS	H

(continues)

Table 5.2.2 *Continued*

Row[a]	Line[a]	Location and Function	Fire and Explosion Hazard	Ventilation[b]	Extent of Classified Area[c]	NEC Area Electrical Classification (All Class I, Group D)[d]	Materials of Construction[e]	Fire Protection Measures
7	a	PRIMARY SEDIMENTATION TANKS Separation of floating or settleable solids from raw wastewater	Possible ignition of flammable gases and floating flammable liquids	A	Enclosed— entire space	Division 1	NC	H;CGD if enclosed in a building
	b			B	Enclosed— entire space	Division 2	NC, I.C, or LFS	H; CGD if enclosed in a building
	c			Not enclosed, open to atmosphere	Interior of the tank from the minimum operating water surface to the top of the tank wall; envelope 0.46 m (18 in.) above the top of the tank and extending 0.46 m (18 in.) beyond the exterior wall; envelope 0.46 m (18 in.) above grade extending 3 m (10 ft) horizontally from the exterior tank walls	Division 2	NC, I.C, or LFS	H
8		AERATION BASIN, POND, LAGOON, OXIDATION DITCH, AEROBIC SUSPENDED GROWTH SYSTEMS, SEQUENCING BATCH REACTORS Aerobic treatment of wastewater open to the atmosphere	N/A	NR		Classified (see Primary Sedimentation) Unclassified if process is preceded by primary sedimentation	NR	H

(continues)

Table 5.2.2 *Continued*

Row[a]	Line[a]	Location and Function	Fire and Explosion Hazard	Ventilation[b]	Extent of Classified Area[c]	NEC Area Electrical Classification (All Class I, Group D)[d]	Materials of Construction[e]	Fire Protection Measures
9	a1	ENCLOSED AERATION BASIN, AEROBIC OR SUSPENDED GROWTH SYSTEMS, MEMBRANE BIOLOGICAL REACTORS Aerobic treatment not preceded by primary treatment	Possible ignition of flammable gases or floating flammable liquids	A (Interior of tank)	Entire enclosed space or tank of system	Division 1	NC	NR
	a2			A (Interior of tank)	Exterior of enclosed space or tank, installed in a building	Division 2	NC, LC, or LFS	NR
	a3			A (Interior of tank)	Exterior of enclosed space or tank, installed outdoors; envelope 0.46 m (18 in.) surrounding tank	Division 2	NC, LC, or LFS	NR
	b1			B (Interior of tank maintained at negative pressure)	Entire enclosed space or tank of system	Division 2	NC, LC, or LFS	NR
	b2			B (Interior of tank maintained at negative pressure)	Exterior of enclosed space or tank, installed in a building	Unclassified	NC, LC, or LFS	NR
	b3			B (Interior of tank maintained at negative pressure)	Exterior of enclosed space or tank, installed outdoors	Unclassified	NC, LC, or LFS	NR
	c			Not enclosed, open to atmosphere	Interior of tank from the minimum operating water surface to the top of the tank wall; envelope 0.46 m (18 in.) above the top of the tank and extending 0.46 m (18 in.) beyond exterior wall; envelope 0.46 m (18 in.) above grade and extending 3 m (10 ft) horizontally from the exterior tank walls	Division 2	NC, LC, or LFS	NR
10	a1	RESIDENTIAL ENCLOSED AERATION BASIN, AEROBIC OR SUSPENDED GROWTH SYSTEMS, MEMBRANE BIOLOGICAL REACTORS Aerobic treatment not preceded by primary treatment, serving one but not more than five dwellings	Possible ignition of flammable gases or floating flammable liquids	A (Interior of tank)	Entire enclosed space or tank of system	Division 2	NC	NR
	a2			A (Interior of tank)	Exterior of enclosed space or tank, installed in a building	Unclassified	NC, LC, or LFS	NR
	a3			A (Interior of tank)	Exterior of enclosed space or tank, installed outdoors	Unclassified	NC, LC, or LFS	NR

(continues)

Table 5.2.2 *Continued*

Row[a]	Line[a]	Location and Function	Fire and Explosion Hazard	Ventilation[b]	Extent of Classified Area[c]	NEC Area Electrical Classification (All Class I, Group D)[d]	Materials of Construction[e]	Fire Protection Measures
11		ENCLOSED AERATION BASIN, AEROBIC OR SUSPENDED GROWTH SYSTEMS, MEMBRANE BIOLOGICAL REACTORS Aerobic treatment of wastewater preceded by primary treatment	N/A	NR	Entire enclosed space	Unclassified	NC, LC, or LFS	NR
12		TRICKLING FILTER, BIO-TOWER, AEROBIC FIXED-FILM SYSTEMS Aerobic biological treatment of wastewater	Not normally a significant hazard; however, these processes might contain materials that are combustible under certain conditions	NR	N/A	Classified (*See Primary sedimentation*) Unclassified if unit process is preceded by primary sedimentation	NR	H
13	a	ANAEROBIC TOWERS, ANAEROBIC FIXED-FILM SYSTEM Anaerobic biological treatment if sealed from atmosphere	Normally produces combustible gas as treatment process by-product	N/A	Tank interior	Division 1	NC	FE and H
	b			N/A	5 m (10 ft) envelope around tank	Division 2	NC, LC, or LFS	FE and H
14	a	GAS-HANDLING SYSTEMS FOR LIQUID TREATMENT PROCESSES	Combustible gas, often under pressure	A	Enclosed— entire space	Division 1	NC	FE and H
	b			B	Enclosed— entire space	Division 2	NC, LC, or LFS	FE and H
	c			Not enclosed, open to atmosphere	Within a 5 m (10 ft) envelope around equipment[f]	Division 2	NC, LC, or LFS	FE and H
15		OXYGEN AERATION TANKS Tanks for aerobic treatment of wastewater using high-purity oxygen rather than air	Ignition of flammable gases and floating flammable liquids in an oxygen-enriched environment	N/A	Enclosed space	Division 2 (If unit process is not preceded by primary sedimentation, see Primary sedimentation Tanks in Table 5.2.2 for classification.)	Any equipment or material within the reactor space shall be safe for exposure to volatile in an oxygen-enriched atmosphere	Special provision for LFL monitoring and automatic isolation of equipment and oxygen supply
16		INTERMEDIATE, SECONDARY, OR TERTIARY SEDIMENTATION TANKS Separate floating and settleable solids from wastewater at various treatment stages	N/A	NR	N/A	Classified (*See Primary sedimentation*) Unclassified if unit process is preceded by primary sedimentation	NR	H
17		FLASH MIXER OR FLOCCULATION TANKS Tanks for mixing various treatment chemicals with wastewater	N/A	NR	N/A	Classified (*See Primary sedimentation*) Unclassified if unit process is preceded by primary sedimentation	NR	H
18		NITRIFICATION AND DENITRIFICATION TANKS Tertiary treatment of wastewater to reduce or remove nitrogen	N/A	NR	N/A	Classified (*See Primary sedimentation*) Unclassified if unit process is preceded by primary sedimentation	NR	H

(continues)

Table 5.2.2 *Continued*

Row[a]	Line[a]	Location and Function	Fire and Explosion Hazard	Ventilation[b]	Extent of Classified Area[c]	*NEC* Area Electrical Classification (All Class I, Group D)[d]	Materials of Construction[e]	Fire Protection Measures
19		BREAKPOINT CHLORINATION TANKS AND CHLORINE CONTACT TANKS Application of chlorine in aqueous solution to wastewater	N/A	NR	N/A	Unclassified	NR (These unit processes use corrosive chemicals that require the use of specific materials of construction. Special consideration shall be given to these materials of construction.)	H
20		AMMONIA STRIPPING TOWERS	(*See Trickling filter in Table 5.2.2.*)	N/A	N/A	Unclassified	NR (These unit processes use corrosive chemicals. Special consideration shall be given to these materials of construction.)	H
21		INTERMEDIATE OR FINAL PUMPING STATIONS AND OTHER UNIT PROCESSES AND STRUCTURES NOT SPECIFICALLY ADDRESSED IN THIS TABLE. Preceded by primary treatment	N/A	NR	N/A	Unclassified	NR	H
22		GRAVITY AND PRESSURE FILTERS Filtering of treated wastewater through sand or other media	N/A	NR	N/A	Unclassified	NR	H
23		CARBON COLUMN OR TANKS Vessels containing carbon for tertiary treatment of wastewater	Significant hazard from combustible carbon material	N/A	N//A	Unclassified	NR	H
24		ON-SITE OZONE GENERATION SYSTEM AND OZONE CONTACT TANKS Ozone generation and purification for disinfection of wastewater	Similar to oxygen generation with addition of being highly corrosive (*See Table D.1.1.*)	N/A	N/A	Not covered in this standard	NR	NR
25		BACKWASH WATER AND WASTE BACKWASH WATER HOLDING TANKS Tanks for temporary storage of backwash water	N/A	N/A	N/A	Unclassified	NR	H
26		ULTRAVIOLET DISINFECTION UNIT Disinfection of wastewater effluent by ultraviolet radiation	N/A	NR	N/A	Unclassified	NR	H

(continues)

Table 5.2.2 *Continued*

Row[a]	Line[a]	Location and Function	Fire and Explosion Hazard	Ventilation[b]	Extent of Classified Area[c]	*NEC* Area Electrical Classification (All Class I, Group D)[d]	Materials of Construction[e]	Fire Protection Measures
27		EFFLUENT STRUCTURES Various structures conveying treated wastewater away from treatment processes	N/A	NR	N/A	Unclassified	NR	H
28	a	ODOR-CONTROL AND VENTILATION SYSTEMS SERVING CLASSIFIED AREAS *(See Table 4.2.2)*						
	b							
	c							

Note: The following codes are used in this table:
A: No ventilation or ventilated at less than 12 air changes per hour
B: Continuously ventilated at 12 air changes per hour in accordance with Chapter 9.
C: Continuously ventilated at six air changes per hour in accordance with Chapter 9.
CGD: Combustible gas detection system.
D: No ventilation or ventilated at less than six air changes per hour.
FDS: Fire detection system.
FE: Portable fire extinguisher.
H: Hydrant protection in accordance with 7.2.4.
LC: Limited-combustible material.
LFS: Low flame spread index material.
N/A: Not applicable.
NC: Noncombustible material.
NEC: In accordance with *NFPA 70*.
NR: No requirement.

[a]The "Row" and "Line" columns are used to refer to specific figures in A.5.2 and specific requirements for each location and function.
[b]This column indicates the ventilation requirements for processes. Additional ventilation requirements are provided in Chapter 9. Ventilation signaling and alarm requirements are provided in Chapter 7.
[c]Open channels and open structures upstream from the unit processes are classified the same as the downstream processes they supply.
[d]These unit processes use corrosive chemicals that can have a deteriorating effect on conductors and equipment. Electrical equipment shall be identified for use in the operating environment.
[e]This column indicates the materials of construction for processes. Materials of construction for buildings in which these processes are housed are in accordance with the applicable building code and construction requirements provided in Chapter 8.
[f]The area beyond the envelope is unclassified.
[g]Where liquid turbulence is not induced by aeration or other factors, the following criteria apply: (1) interior of the tank from the minimum operating water surface to the top of the tank wall; (2) envelope 0.46 m (18 in.) above the top of the tank and extending 0.46 m (18 in.) beyond the exterior wall; (3) envelope 0.46 m (18 in.) above grade extending 3 m (10 ft) horizontally from the exterior tank walls.

Click here to return to Air Purification (PSs)

Click here to return to Air Purification (TPs)

EXHIBIT AA

PureAIR FILTRATION

Packaged Filter Unit (PFU)

Basic Information:

- Main Function: protecting mission critical electronics from hardware failure, including in control rooms at wastewater and water treatment plants, refineries and paper plants, and data centers, improving indoor air quality, & commercial odor control
  - Our PFU Mobile and PFU Mini units, explained later in this section, are the smallest versions of the PFU model
- Complete, self contained, vertical airflow configuration
- Free standing and very compact unit which can provide continuous high efficiency purification at airflows between 500 and 3,000 CFM
- Multiple media stages for chemical adsorbent media
- Multiple sizes and customizable options explained later in section

Benefits of PFU System:

- Self contained and compact, especially relative to airflow capacity
- Free standing, energy efficient, and quiet
- Positive seal prevents air bypass for highest filtration efficiency
- Produces pressurization, recirculation, or both
- Easy access to internal parts and adsorbent media for maintenance and changeout
- Integrated particulate filter

Customizable Options:

- Multiple power input configurations
- Options for construction material
- Various sizes available depending on footprint, airflow, and other customer requirements- See model selection guide on next page
- Media selection for multiple media cartridges- see adsorbent media section for options
- Further options for pre and final filters, as well as other features- see remainder of this section for full details on customizable options

Packaged Filter Unit (PFU)

PureAIR FILTRATION

Model Nomenclature:

PFU - XXXX - B

Model — Airflow in CFM — Number of Banks (1 or 2)

PFU MODEL NO	AIRFLOW RANGE CFM (CMH)	MOTOR SIZE HP (KW)	MEDIA VOLUME FT^3 (M^3)	SHIPPING WEIGHT LBS (KG)	OPERATING WEIGHT LBS (KG)
PFU-1000-2	500-1000 (850-1700)	1 (0.75)	4 (0.11)	530 (240)	730 (330)
PFU-2000-2	1000-2000 (1700-3400)	2 (1.5)	8 (0.23)	980 (445)	1380 (625)
PFU-3000-2	1500-3000 (2550-5100)	3 (2.3)	12 (0.35)	1220 (555)	1820 (825)

Two of the PFU Units are Mobile and Have Different Nomenclature:

Mobile PFU MODEL NO	AIR RANGE CFM (CMH)	MOTOR SIZE HP (kW)	MEDIA VOLUME FT^3 (M^3)	SHIPPING WEIGHT LBS (KG)	OPERATING WEIGHT LBS (KG)
PFU-Mobile	500 - 1,000 (850-1700)	0.8 (0.6)	4 (0.11)	280 (127)	440 (200)
PFU-Mini	250 - 500 (425-850)	0.3 (0.2)	1 (0.03)	190 (86)	270 (122)

*Note that these units were previously called the DC-1 and DC-mini. They have been renamed to portray their similarities to the PFU model as well as their many applications.

PureAIR FILTRATION

Selecting Standard Options

- Construction Material - Painted/coated steel, aluminized steel, FRP, 316 or 304 grade stainless steel, or aluminum options
  - Painted/Coated Steel Standard
- Particulate Filter Options
  - Options for First Filter- protects downstream system components and improves life of media
    - Standard- 2", 30% MERV 8 filter
    - Optional 95%+ filters are available to prevent small particulates blinding media
    - Magnehelic or photohelic differential pressure gauges available to determine when or cleaning is necessary
  - Final Filter - removes any fine dust which may be released during media changeout or initial start-up, standard for industrial customers
    - 6", 95% MERV 13 filter with extruded aluminum tracks and positive air seals to prevent air bypass
    - Magnehelic or photohelic differential pressure gauges available to determine when changeout or cleaning is necessary
- Blower- internal direct drive or belt drive blower standard. Discuss vendor and factory options with PureAir Representative
  - Redundant blowers available
- Multiple available power configurations
- Adsorbent Media- up to 2 media stages available
  - Types of Adsorbent Media to fill media banks- see media section

Packaged Filter Unit (PFU)

PureAIR FILTRATION

Additional Features & Options

- Intake Louver
- Intake Hood
- Inlet Isolation Damper
- Insulated / Double Walled
- Internal Plenum Fan or External Scroll Fan
- Sound Enclosure
- Outlet Silencer
- No-Loss stacks

Our team is proud to offer fully customizable solutions with various standard features described- ask our team about any additional options in which you may be interested.

Packaged Filter Unit (PFU)

PureAIR FILTRATION

PFU-Mobile and PFU-Mini

Protect Critical and Valuable Servers from Polluted Air

PureAir's PFU-mobile and PFU-mini units are self-contained, moveable units that recirculate the air in controlled environments like control rooms and data centers. As the air passes through PureAir's gas adsorbent media, harmful corrosive gases are captured and permanently bound. Purified air is sent out the top of the unit where it is used to cool servers and computer components without harming electrical components. The unit has low energy consumption and noise, and installation is a snap in your existing server cabinets, plugging into standard electrical sockets. The PFU-mobile unit provides protection for up to 5000 square feet (approximately 500 M2). Airflow is variable, controllable up to 1000 cfm (1700 CMH), and differential pressure gauges indicate filter changes for easy maintenance. Other information and details include:

- Variable airflow
- Low EMF brushless AC blower motor
- Low noise and energy consumption
- Available in 110-230 V and 50/60 V options
- MERV 7 (G4) Dust prefilter
- MERV 13 (F7) Dust final filter
- Optional differential pressure gauges to indicate dust filter change
- PureAir chemical adsorbent media filled in low pressure holding frames

	Room Air Volume Capacity by Model	
Air Quality	PFU-Mini	PFU-Mobile
G2	20000 ft3 (600 M^3)	40000 ft3 (1200 M^3)
G3	10000 (300 M^3)	20000 ft3 (600 M^3)
GX	5000 ft3 (150 M^3)	10000 ft3 (300 M^3)
**Based on ISA S71.4 or ASHRAE TC9.9 recommendations*		

PureAIR FILTRATION

Additional Features & Options

- Intake Louver
- Intake Hood
- Inlet Isolation Damper
- Insulated / Double Walled
- Internal Plenum Fan or External Scroll Fan
- Sound Enclosure
- Outlet Silencer
- No-Loss stacks

Our team is proud to offer fully customizable solutions with various standard features described- ask our team about any additional options in which you may be interested.

Packaged Filter Unit (PFU)

PureAIR FILTRATION

PFU-Mobile and PFU-Mini

Protect Critical and Valuable Servers from Polluted Air

PureAir's PFU-mobile and PFU-mini units are self-contained, moveable units that recirculate the air in controlled environments like control rooms and data centers. As the air passes through PureAir's gas adsorbent media, harmful corrosive gases are captured and permanently bound. Purified air is sent out the top of the unit where it is used to cool servers and computer components without harming electrical components. The unit has low energy consumption and noise, and installation is a snap in your existing server cabinets, plugging into standard electrical sockets. The PFU-mobile unit provides protection for up to 5000 square feet (approximately 500 M2). Airflow is variable, controllable up to 1000 cfm (1700 CMH), and differential pressure gauges indicate filter changes for easy maintenance. Other information and details include:

- Variable airflow
- Low EMF brushless AC blower motor
- Low noise and energy consumption
- Available in 110-230 V and 50/60 V options
- MERV 7 (G4) Dust prefilter
- MERV 13 (F7) Dust final filter
- Optional differential pressure gauges to indicate dust filter change
- PureAir chemical adsorbent media filled in low pressure holding frames

	Room Air Volume Capacity by Model	
Air Quality	PFU-Mini	PFU-Mobile
G2	20000 ft3 (600 M^3)	40000 ft3 (1200 M^3)
G3	10000 (300 M^3)	20000 ft3 (600 M^3)
GX	5000 ft3 (150 M^3)	10000 ft3 (300 M^3)
*Based on ISA S71.4 or ASHRAE TC9.9 recommendations		

Packaged Filter Unit (PFU)

PureAIR FILTRATION

Case Study - Christie's

The Problem:

Christie's Auction House has sold precious pieces of artwork and estate for hundreds of years. The first US auction was held in 1977 in Rockefeller Center, New York, and since that time, the US Branch has continued to host numerous priceless artifacts for sale. In 2015, sales totaled $7.4 billion. Needless to say, Christie's must take extra precautions to protect these valuable pieces of artwork. Even the slightest amount of pollution in the air can tarnish delicate artifacts, so it is incredibly important to keep the air inside the auction house free of all contaminants. Christie's looked to the air purification market for a solution to super-purify the air in its facilities.

The Solution:

Christie's contacted PureAir Filtration to see if a solution to their problem could be provided. Familiar with applications requiring super purification in an urban commercial environment, the engineers at PureAir recommended four Packaged Filter Units to handle the job. The model chosen was the PFU-6000, and details of the units included:

- Galvanized steel double wall construction
- Internal aluminum plenum fan with 10 Hp
- MERV 6 prefilter and MERV 13 final filter
- PureAir CP blend media in PP12 refillable modules

The units and media have been successful in protecting the priceless pieces of artwork from pollutant corrosion.

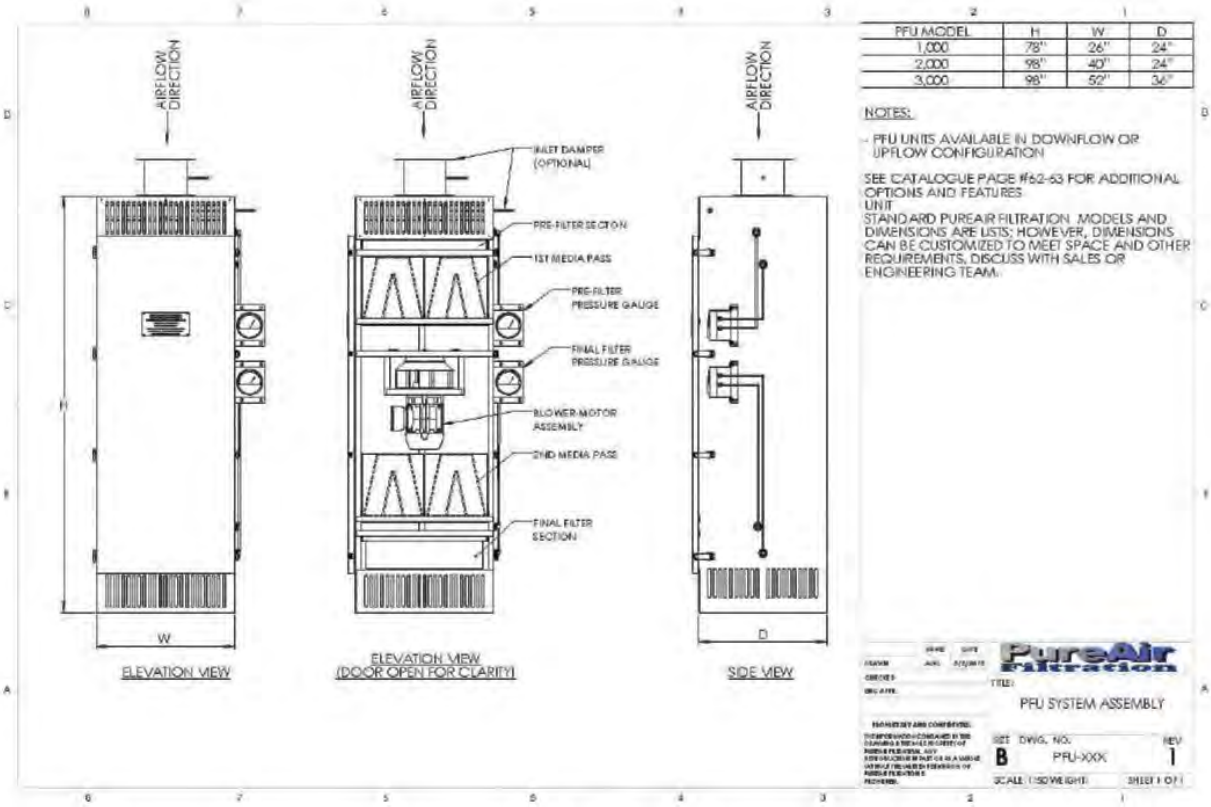

PFU MODEL	H	W	D
1,000	78"	26"	24"
2,000	98"	40"	24"
3,000	98"	52"	36"

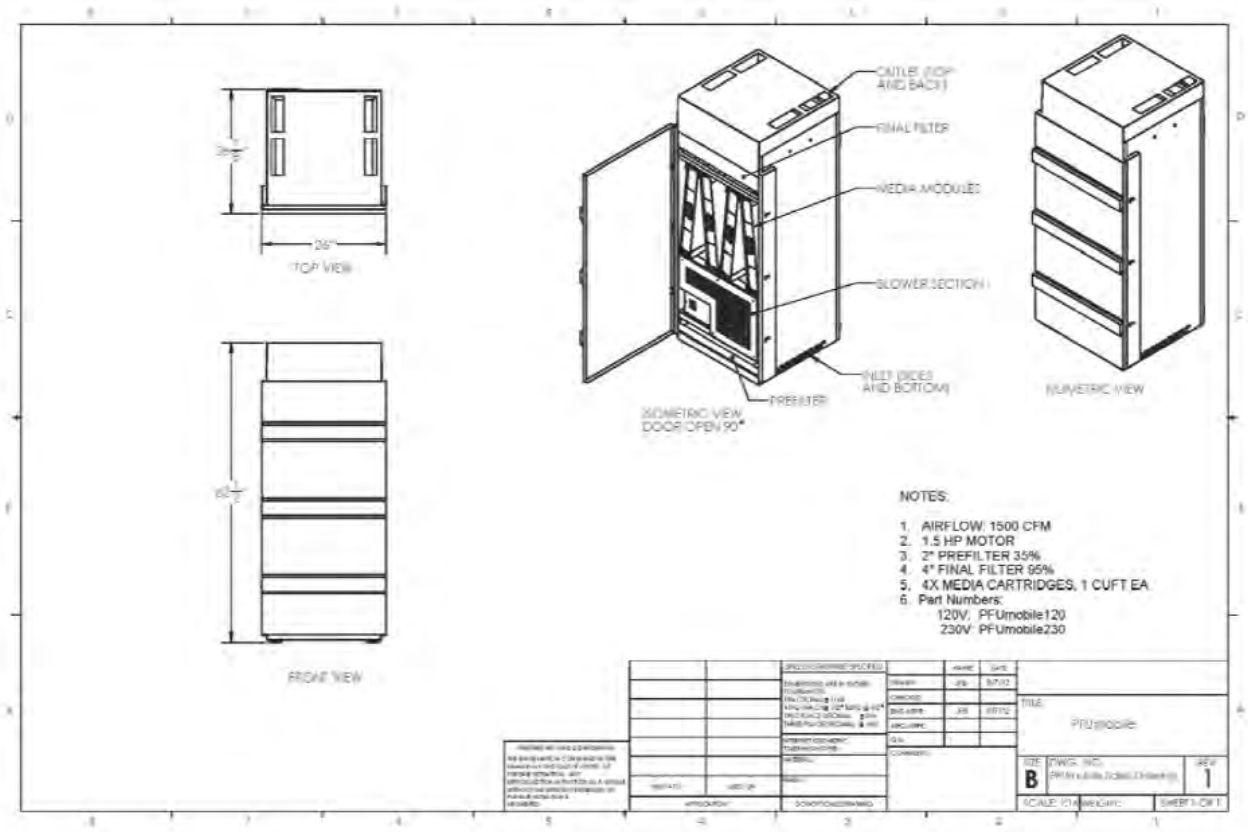
TOP VIEW
FRONT VIEW
OUTLET (TOP AND BACK)
FINAL FILTER
MEDIA MODULES
BLOWER SECTION
INLET (SIDES AND BOTTOM)
PREFILTER
ISOMETRIC VIEW DOOR OPEN 90°
ISOMETRIC VIEW
NOTES:
1. AIRFLOW: 1500 CFM
2. 1.5 HP MOTOR
3. 2" PREFILTER 35%
4. 4" FINAL FILTER 95%
5. 4X MEDIA CARTRIDGES, 1 CUFT EA
6. Part Numbers:
120V: PFUmobile120
230V: PFUmobile230
B
1

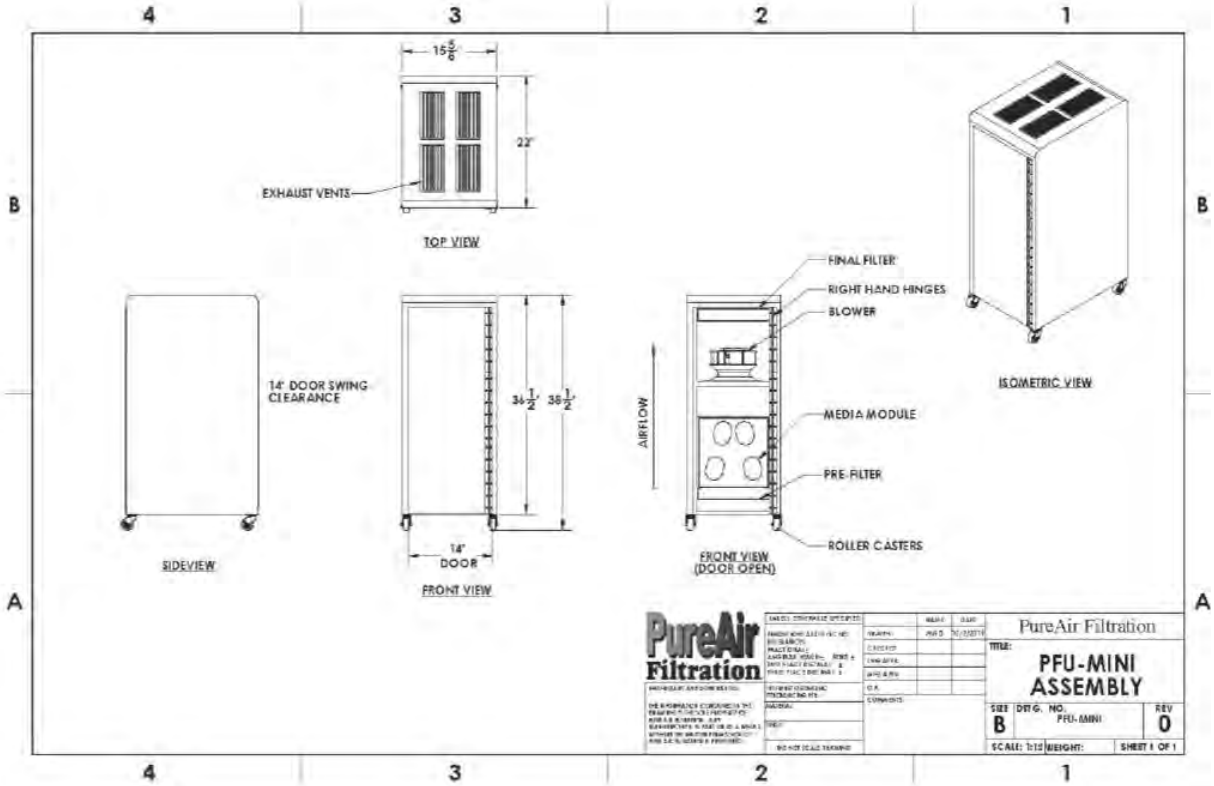

(Click here to return to Index)

Section 33 – Information Technology Infrastructure Hardware

A. Introduction – This section serves to provide information and standards pertaining to the hardware installation and/or upgrade of HRSD's Information Technology assets to include new construction and renovation efforts, and to ensure consistency with HRSD's internal policy related to IT infrastructure hardware and conform to BICSI standards as closely as possible.

B. General – The objectives are to standardize HRSD's server and network infrastructure designs to:

1. Maximize functionality and performance.

2. Minimize time-to-resolution during troubleshooting efforts.

3. Facilitate the installation or upgrade process by clearly defining expectations so that re-work is minimized.

C. Specific Requirements

1. Fiber infrastructure shall be OM4, 50µm multimode unless otherwise specified.

2. All fiber terminations shall be of the LC type unless otherwise specified and approved by HRSD. All ends shall be terminated and landed in an industry standard closet connector housing such as Corning LANscape CCH-01U, or HRSD approved equivalent. Such housing must be capable of being fully extended to make any needed repairs. No fiber ends shall be left un-terminated. Protective dust caps shall remain in place on all unused connectors.

3. Copper infrastructure shall consist of CAT 6 cabling with matching patch panels, such as Leviton CAT6 eXtreme, or HRSD approved equivalent.

4. In the case of control network devices, copper patch cables shall be green and yellow to denote the primary and secondary network connections, if employed. Business network patch cables shall be blue, management network patch cables shall be white. Patch cables shall be of the snagless type and manufactured by Tripp-Lite or other HRSD approved equivalent.

5. With either connectivity type (fiber or copper), wire management devices shall be utilized in such a manner as to afford the cleanest and most organized appearance.

6. All network cables including fiber and copper shall be labeled to identify source switch port, switch name, destination port, and destination name. Due to the

dependency of labeling nomenclature with respect to data centers, treatment plants, pump stations, and other field cabling, IT should be consulted once all network drops are patched down and the patch panel is ready to accept network equipment.

7. Servers, switches, and routers shall employ dual power supplies, where available, and connected to separate dedicated UPS' fed by separate circuits.

8. If dual power supplies are not available, automatic transfer switches (ATS) fed by separate dedicated circuits shall be utilized.

9. Servers shall be manufactured by Hewlett-Packard (HP) unless an issue is identified that can only be resolved by selecting another HRSD approved vendor.

10. Switches, routers, and other active components making up the network infrastructure shall be manufactured by Cisco, be no less than five (5) years to end of life (EOL) and be capable of remote management. Under no circumstances shall a non-Cisco device or otherwise unmanageable network device be employed for any purpose.

11. All server and network hardware shall be rack mounted and securely fastened using the hardware recommended by the manufacturer, including the quantity (all mounting provisions within reason shall be utilized). All systems shall have a 1U space between them.

12. For telco. rooms requiring one or more network equipment racks, such racks shall be the four-post tapped rail type, black in color, measure 84"H x 36"D, and accept standard 19" wide equipment . An example of such a rack would be the Chatsworth Products #15218-703. A minimum 3' perimeter is required around the rack for access. The rack shall be fastened to the floor using Tapcon® concrete anchors, or equivalent. The equipment rack shall be bonded to the building ground bus bar

13. For server closets or small server rooms, the equipment cabinet shall be fully enclosed on two sides with lockable doors front and back, black in color, measure 44U x 30"W x 45"D, and utilize a square punched hole rail system capable of accepting standard cage nut hardware kits and standard 19" wide equipment. An example of such a cabinet would be the Eaton Paramount #JW843045. A minimum 3' perimeter is required around the cabinet for access. Single, standalone, cabinets shall be fastened to the floor using Tapcon® concrete anchors, or equivalent. Two or more cabinets side-by-side can be ganged together if anchoring to the floor is not feasible or practical. The equipment cabinet shall be bonded to the building ground bus bar

14. Power for either racks or cabinets shall be provided via PDU's made by the manufacturer of the cabinet, if possible, and neatly and securely integrated within

the rack/cabinet.

15. Servers shall employ wire managers or other equivalent hardware to allow for their full extension away from the rack on their rails so that maintenance can be performed when needed without disconnecting power, network, etc.

16. All server and network hardware shall be labeled to clearly identify its purpose. Due to the dependency of labeling nomenclature with respect to data centers, treatment plants, pump stations, and other field cabling, IT should be consulted once all network drops are punched down and the patch panel is ready to accept network equipment.

17. All active components (servers, switches, routers, etc.) shall be left de-energized until the space they occupy is reasonably clean and free of construction activity.

18. The use of media converters and other extraneous hardware shall be kept to the absolute minimum required to complete the design. In cases where media converters must be used, they shall be mounted in a dedicated powered rack supplied by the manufacturer. If this arrangement is not practical, they shall be securely and neatly fastened to a rigid shelf mounted in the equipment cabinet. Wiring for the media converter shall be routed and secured to afford the cleanest and most organized appearance. Like other network devices, the media converters shall be labeled to indicate their intended purpose.

End of Section

Section 34 - Miscellaneous

A. Introduction – This section provides design criteria, specific requests/recommendations and preferences related to specifying and constructing systems and materials used in HRSD facilities for items not discussed in the other sections. HRSD plant sites are harsh and aggressive industrial environments and the information provided is based on experience within these environments. HRSD expects the FIRM to evaluate all conditions and criteria related to environmental conditions of each project and to recommend and design suitable systems and materials for the specific project conditions. This section includes site work, concrete, masonry, metals and plastics, thermal and moisture protection, doors, windows, and glass, finishes sections of the technical specifications, and architectural standards.

B. Site

1. Site Drainage

   a. Refer to HRSD's Master Specification "01560 – Environmental Protection and Special Controls" within this manual.

   b. Design site grading and surface paving to enhance natural stormwater sheet flow/runoff. Minimize underground storm piping systems to minimize maintenance.

   c. Require removal of all rocks, debris, etc. from finished grade soil.

   d. Ensure that drawings and or specifications define the finish grade material.

   e. Construction methods to comply with State and locality stormwater requirements.

2. Landscaping

   a. Specify grass seed appropriate for the specific times/seasons of year anticipated for planting.

   b. Specify grass seed mixtures that will initially develop and grow without supplemental watering.

   c. Provide a general stand of grass unless otherwise directed for specific locations. Do not specify elaborate grass planting plans with exotic fertilizers, mulches, and other requirements.

   d. Provide for compliance with the *Virginia Erosion and Sedimentation Control Manual*, latest edition.

   e. Require/specify stabilization matting in all drainage swales/ditches.

3. Plant Material - Specify minimum plant material required by local municipalities, unless directed by HRSD.

4. Concrete Curb and Gutter

    a. Specify only where required by municipalities or for other specific design/containment reasons.

    b. Specify curb and /or gutter as drive over similar to VDOT CG-3 or 7, when required.

5. Sidewalks

    a. Provide minimum width of three (3) feet.

    b. Specify specific compaction under sidewalks to allow plant maintenance equipment to cross without cracking.

C. <u>Concrete</u>

1. Provide chamfered edges on all vertical and horizontal exposed edges. Prefer three-quarters to one (3/4 – 1) inch chamfered edges.

2. Specify and detail water stop material to insure its proper installation and effectiveness.

3. Specify and detail expansion and construction joints to ensure proper installation and effectiveness against water leaking.

4. Design all plant and pump station concrete using ACI 350R.

5. The FIRM shall conduct a pre-construction meeting specifically related to concrete. This meeting will be held separately and in addition to the traditional Project Pre-Construction Meeting.

    a. The following individuals should attend this meeting:

        i. FIRM's structural design engineer
        ii. Inspectors
        iii. General and appropriate sub-contractors
        iv. Supplier's field quality control representative
        v. Concrete testing company representative
        vi. HRSD Project Manager

    b. Minimum issues to be discussed at the meeting include:

        i. Concrete placement schedule and sequencing
        ii. Review of appropriate codes

iii. Cold/warm weather issues
iv. Workmanship and aesthetic issues
v. Approval and rejection of work
vi. Test panel as standard for approval of future work

D. Masonry

1. Specify and detail rubberized asphalt flashing over all required openings in non-corrosive environments.

2. Specify and detail stainless steel flashing over all required openings in corrosive environments.

3. Specify and detail flashing material and installation to ensure correct installation and effectiveness.

4. Provide galvanized steel lintels over all exterior openings in non-corrosive environments

5. Provide 316 stainless steel lintels over all exterior and interior openings in corrosive environments.

6. Do not use precast concrete or stone copings.

E. Metals and Plastics

1. Hand/Guard Rails, Stair Systems: Specify and design all materials and systems to meet the criteria and conditions of the specific application and environment considering the following.

   a. Provide aluminum or fiberglass materials for all corrosive interior and exterior environments.

   b. Provide galvanized steel, anodized aluminum, or fiberglass materials for all interior and exterior non-corrosive environments.

2. Hatches (including all pre-manufactured hinged systems solid cover plates and assemblies). Design and specify all materials and systems to meet the criteria and conditions of the specific application and environment.

   a. Specify anodized aluminum, fiberglass or stainless-steel materials for all corrosive interior and exterior environments.

   b. Specify galvanized steel, anodized aluminum, or fiberglass materials for all interior and exterior non-corrosive environments.

c. Design to be flush with surrounding surface (unless conditions require otherwise, and design is approved by HRSD).

d. Provide hatches with opening and hold open hardware integral with the hatch assembly.

e. Provide 316 stainless steel hardware.

f. Provide a minimum two (2) inches of bearing surface along all sides of the hatch cover.

g. Specify and or design hatch covers to not exceed a maximum deflection of 1/150th of the span when loaded.

h. Provide post and chain or OSHA approved fall protection systems around all hatch openings.

i. Indicate design loading on the drawings.

3. Grating

a. Provide anodized aluminum, fiberglass or stainless-steel materials for all corrosive interior and exterior environments.

b. Provide galvanized steel, anodized aluminum, or fiberglass materials for all interior and exterior non-corrosive environments.

c. Provide hardware compatible with the grating system material and environment.

d. Design to be flush with surrounding surfaces (unless conditions require otherwise, and design is approved by HRSD).

e. Provide continuous perimeter banding. All openings within the grating shall have continuous banding. At the annular space around penetrations through gratings, install a cover-plate over the annular space (or otherwise close the opening) in compliance with OSHA.

f. Design grating to not exceed a maximum deflection of 1/150th of the span when loaded.

g. Indicate the design loading on the drawings.

F. <u>Thermal and Moisture Protection</u>

1. Roofing

a. Provide a minimum of 1/4 inch of slope per foot.

b. Provide sumps around all roof drains.

c. Direct all roof surface water toward drains by built-up roof sections, crickets, etc.

d. Extend roof membrane up the backside of parapets.

e. Locate HVAC and other equipment off the roofs if feasible. If equipment is to be located on the roof, placement of equipment shall be more than ten (10) feet from any leading roof edge.

f. Provide minimum 36-inch-wide walkway protection pads from the roof access point to all roof top equipment.

g. Provide minimum 36-inch walkway protection pads around all four sides of all roof mounted equipment.

h. Provide roof access by roof hatch with ladder or by an exterior wall mounted ladder for all plant buildings.

i. Refer to Section 2 – "Architectural and Landscaping Design and Review Process", Attachment A – Pump Station Architectural Guidelines for roof design.

j. Specify 40-year composite type Architectural shingle for pump station A-frame roofs or as indicated in Section 2 – "Architectural and Landscaping Design and Review Process" and as selected by HRSD Architectural Review Committee.

k. Install fall protection per OSHA Guidelines

2. Specify pre-finished aluminum coping or gravel stop system.

G. <u>Doors and Hardware</u>

1. General

a. Provide entry doors with threshold elevation high enough to avoid concerns with potential flooding at 100-year flood elevation as referenced in Section 10 – "Flood Elevation Requirements" in this standards manual.

b. Provide non-removable hinge pins on outward swinging exterior doors.

c. Provide heavy duty industrial grade hardware.

d. Install kickplates on all exterior doors and all doors with closers.

e. Provide heavy duty industrial grade hardware on all overhead doors.

f. Provide overhead doors designed for 110 MPH wind load.

2. Pump Stations

a. Provide fiberglass doors and frames with stainless steel hardware in corrosive areas (i.e. wet wells).

b. Provide pre-finished aluminum doors in all other locations.

c. Provide double leaf (each three (3) feet wide) entry doors.

d. Provide continuous hinge on entry doors.

e. Specify that locksets shall be supplied by HRSD and installed by the Contractor.

3. Treatment Plants (See also: Ride-Out Space requirements.)

a. Provide anodized aluminum exterior doors and frames in maintenance and process areas.

b. Provide aluminum doors with continuous hinges in maintenance and process areas.

c. Provide a vision glass in all exterior doors.

d. At all office spaces provide a vision glass in the office entry door, unless a door sidelight or a borrowed light (interior window) is provided.

e. Provide hardware that is compatible with the door and frame material and the environment.

f. Provide locksets only on administration and storage spaces.

4. Electronic Entry-Access Control

a. Entry access control needs at HRSD facilities (at interior doors, exterior doors, site gates, etc.) shall be coordinated with HRSD for the specific requirements of the facility.

b. Across HRSD, a certified security vendor/company named CTSI is currently used to purchase and install HRSD's security system equipment for entry access control. The primary method of electronic entry-access control is via employee-assigned ID proximity cards which operate card/badge readers (aka: proximity readers). The

model prox reader that HRSD currently uses is HID Corp PN 5365EGP00-N 1001, with an 8- reader controller board that interfaces with their rack-mounted CCURE Security System. HRSD's I.T. services office coordinates electronic access control systems.

c. See the typical door access-control diagram at the end of this section.

H. Painting and Coatings

1. Painting and Coatings Systems

a. Evaluate the various environments and recommend painting and coatings systems considering lifecycle costs and accessibility for re-coating. The FIRMs shall carefully review the information in HRSD Master Specification 09900 Protective Coatings in Section 40 of this standards manual and discuss how and or why they anticipate complying with or deviating from the recommendation of the manual.

b. Provide a painting and coating schedule for the project.

2. Limits of Coatings in Covered Tanks

a. When covered tanks require coatings for corrosion protection, the coatings shall cover all surfaces in the vapor space and extending to one (1) foot below the minimum water surface and a minimum of four (4) inches beyond the edge of the cover.

b. Pay special attention to the coatings termination details to prevent deterioration and undercutting.

3. Pump Stations

a. Minimize surfaces to be painted.

b. Do not paint concrete floors

c. Do not paint interior CMU walls. Specify that the certain materials unfinished face shall be the final finish and workmanship is critical.

d. Do not paint electrical conduit.

I. Architectural/Structural

1. Shall be designed and constructed to Building Code requirements per locality where facilities are being built.

2. Ride-out space at Treatment Plants and administrative buildings to be designed to withstand a Category I hurricane / wind event and to be functional at that corresponding flood level.

    a. Design Wind Loads: Comply with requirements of ASCE 7-10 for the locality's Ultimate Wind Speed and the facility's Risk Category. Structural design drawings shall show the Ultimate Wind Speed and the Components and Cladding design pressure local to the facility.

    b. Wind-Borne-Debris Resistance: Exterior window and door assemblies shall show (without use of auxiliary protection) Florida Building Code "FLA (PAD)" approval for Large (D) and Small Missile impact and pressure cycling at design wind pressure. Windows shall pass the Wind-Borne Resistance test: ASTM E1996 Wind Zone 1, Enhanced Protection, for Large (D) Missile Impact.

    c. Flood: At a minimum, comply with current flood zone (FIRM) map and Design Flood Elevation (DFE) for the locality of the facility. Consideration shall be given to climate-change flooding projections for the region. Design recommendation shall be reviewed with HRSD.

3. Indicate the use classifications for all building spaces.

4. Indicate design floor loads.

5. Post the design live load limit on the perimeter of storage mezzanines, in locations easily visible from the ground floor.

6. Pumping stations and other buildings and sites constructed in public areas shall be designed and configured to be in harmony with the surrounding setting. Architectural and landscaping designs and renderings will be submitted to and approved by HRSD's Architectural Review Committee at the PER stage.

    a. Refer to the Pump Station Architectural Guidelines in Section 2 – "Architectural and Landscaping Design and Review Process" in this manual.

J. <u>Interior Finishes</u>

1. Epoxy/Urethane Flooring: In administrative, shop, and lab facilities, regular cleaning maintenance is typically performed by staff and not by outside contractors. As a result. highly durable, easily cleanable, monolithic floor finishes are preferred in all areas normally accessible to Operations personnel. Such spaces can include corridors, offices, lab areas, breakrooms, toilet/locker/shower rooms, maintenance shops, and other support spaces (housekeeping, workrooms, plans rooms, tools/supplies storage). Integral coved wall base is preferred. Products frequently specified for these areas include the following:

a. Flooring Type [Epx-1]: A decorative, colored-quartz, self-levelling fluid-applied flooring system having 100%-solids epoxy base coat(s), with broadcast aggregate, and clear-gloss top wear coat.
   i. Locations Used: Corridors, offices, and other non-wet areas.
   ii. Appearance: Multi-colored aggregate, with clear gloss topcoat and orange-peel texture (meets ADA friction standards).
   iii. Nominal Dry Thickness: 3/16”
   iv. Basis of Design Product: Dur-A-Flex "Dur-A-Quartz" epoxy flooring system (www.dur-a-flex.com). Apply quartz granules in a double-broadcast method. Utilize manufacturer's fine aggregates for broadcast. Provide Armor-Top clear gloss topcoat. Achieve an orange-peel surface texture. VOC-compliant. Primer required.

b. Flooring Type [Epx-2]: A decorative, colored-quartz,, self-levelling fluid-applied hybrid flooring system having a urethane base coat with a 100%-solids epoxy overcoat(s), a urethane topcoat with broadcast aggregate, and a clear gloss top wear coat.
   i. Locations Used: Formulated with high moisture tolerance for use in shower, locker, and toilet areas.
   ii. Appearance: Multi-colored aggregate, with clear gloss topcoat and orange-peel texture (meets ADA friction standards).
   iii. Nominal Dry Thickness: 3/16”-to-1/4”
   iv. Basis of Design Product: Dur-A-Flex; “Dur-A-Quartz Hybri-Flex EQ" epoxy flooring system: www.dur-a-flex.com. Apply quartz granules in a double- broadcast method, Utilize manufacturer's fine aggregates for broadcast. Provide Armor-Top clear gloss topcoat. Achieve an orange-peel surface texture. VOC- compliant. Self-priming.
   v. EPX-1 and EPX-2 can be made identical in appearance. Floor thickness transition taper to be made at doorways.

c. Flooring Type [Epx-3]: A solid-colored self-levelling hybrid fluid-applied flooring system having a surface-prep scratch coat, a urethane base coat with 100%-solids epoxy overcoat(s), a urethane topcoat with broadcast aggregate, and a pigmented gloss top wear coat.
   i. Locations Used: Maintenance shops and tool/parts storage areas at shops.
   ii. Appearance: Opaque single-color gloss topcoat and orange-peel texture (meets ADA friction standards).
   iii. Nominal Dry Thickness: 3/ 16”
   iv. Basis of Design Product: Dur-A-Flex; “Polycrete SLB” urethane base coat with "Dur-A-Glaze Shop Floor" epoxy overcoat and “Armor-Top” pigmented gloss urethane topcoat, for a system with superior bond over concrete or tile surfaces; www.dur-a-flex.com. Apply in a double-broadcast method utilizing manufacturer's flintshot aggregates, to achieve 3/16" dry finished thickness. Achieve an orange-peel surface texture. Provide Armor-Top pigmented gloss topcoat. VOC-compliant.

K. Miscellaneous Accessories

1. Lockers: Lockers at Treatment Plants shall be single-high (6’) x 18” x 18”, on 4” curb, of heavy-duty (16-ga) steel construction, standard ventilated type. ... Provide two adjacent lockers per person, with one locker used for street gear and the other for work gear. See diagram of a typical 2-locker configuration at end of this section.

2. Locker Room Benches: Provide benches convenient to lockers. Bench seats shall be of 1-1/2” thick solid polymer material.

3. Locker Room Coat-hook Racks: Provide coat-hook rack(s) in Locker Rooms. Used for hanging of full-length work coveralls, they shall be located convenient to locker users. Ideal hook spacing of 6” to 9” on center. See example coat-hook rack detail at end of this section.

4. Locker Room Lavatories (Wash Sinks) at Treatment Plant Locker Rooms: ln addition to accommodating accessibility requirements, where possible the washroom should include a lavatory having a larger basin for forearm washing. This may be in the form of a stainless-steel scullery-type sink. Provide gooseneck faucet with wrist-blade.

End of Section

Section 35 – Standards for Capital Improvement Projects that Involve Construction Dewatering Activities

A. Introduction – This Section was introduced to assist FIRMs with developing approaches for evaluating, permitting, and monitoring suspected groundwater discharges from contaminated soils. Well point dewatering systems are often used to lower the groundwater for deep and long trench construction. The likelihood of encountering contaminated hot spots is increasing as programs to replacement and rehabilitation of HRSD aging infrastructure continue to grow in heavy urban corridors.

   The Master Specification 02710 – Contaminated Groundwater Management was developed in conjunction with this Section and is to be used in the Bid Documents for contractors if groundwater contamination is anticipated.

B. Background - This Discharge Standard is designed to ensure that the discharge of groundwater from dewatering activities containing contaminants is undertaken in accordance with all applicable regulatory requirements to protect the waters of the state. The standard is also designed to ensure the requirements of the Municipal Separate Storm Sewer (MS4) are complied with where the discharge occurs.

   The standard applies to construction dewatering activities managed by HRSD, and the selected FIRM and contractors. This standard shall be implemented by HRSD, the selected FIRM, and its contractor to ensure that proper characterization and treatment of groundwater occurs during construction prior to discharge. HRSD will typically let the contractor determine whether the discharge should be routed to a storm sewer, sanitary sewer or directly to a receiving water based on the availability of alternatives, ability to meet discharge criteria, and cost.

   When groundwater dewatering is anticipated in an area that has a potential to have contaminated groundwater present due to the adjacent land use (ex. gasoline station, dry cleaner, industrial facility), the FIRM shall conduct groundwater testing within the proposed limits of construction to determine the likelihood of encountering contaminated groundwater during construction. This information will normally be provided to the contractor during the bidding process.

   If contaminated groundwater is likely to be encountered during construction or known to exist within the footprint of the project, then the appropriate discharge permits shall be obtained by the contractor prior to commencement of dewatering activities. HRSD will require that the contractor be the permittee. As such, the contractor will be required to undertake all actions necessary to ensure that groundwater from dewatering is discharged in accordance with all applicable permit requirements. This will include securing the necessary permits, securing, and operating all treatment equipment required to meet effluent requirements, monitoring the discharge for quality, and filing the necessary reports.

During dewatering the contractor is responsible for conducting all effluent testing required by the permit and meet the reporting requirements by filing within the required timeframe specified in the permit. HRSD shall be provided with copies of all reporting, to include Discharge Monitoring Reports (DMRs), if applicable.

If contaminated groundwater is encountered during construction dewatering activities and no discharge permits have been acquired and/or a groundwater treatment system is not operational, then dewatering activities shall cease immediately until appropriate action is taken.

Construction dewatering activities shall only be conducted in accordance with the applicable permit(s) to comply with the regulation under Sections 301(a) and 402 of the Clean Water Act (CWA), as well as the requirements of the MS4 Permit in the locality where the discharge will take place.

C. Requirements

Appropriate discharge permits must be secured by the selected contractor prior to discharging contaminated groundwater from dewatering sites. The permits available for the discharge of contaminated groundwater are as follows:

- VDEQ VPDES General Permit for discharges of contaminated groundwater into the storm sewer system or state waters (VAG83).
- VDEQ VPDES Individual Permit for discharges of contaminated groundwater into the storm sewer system or state waters.
- HRSD Industrial Wastewater Permit Letter of Authorization for discharges into the sanitary sewer system for treatment by HRSD.

VDEQ and HRSD will accept discharges of contaminated groundwater only after an assessment of groundwater quality has been performed, and only in accordance with permit conditions. A schedule of the approximate timelines from assessment to general permit acquisition and treatment is provided as **Attachment A**.

Chemical analyses shall be performed in accordance with EPA/VDEQ approved analytical methods by a laboratory accredited through the Virginia Environmental Laboratory Accreditation Program (1VAC30-45 or 1VAC30-46). Contaminant Identification Table for assistance in identifying parameters of concern is provided as **Attachment B**.

D. Receiving Sewer System

1. Storm Sewer System

Groundwater discharges into the storm sewer system or directly into a surface water body must be in accordance with VDEQ and any local MS4 requirements. VDEQ has issued a VPDES General Permit (VAG83) which governs the discharge of wastewaters from sites contaminated by petroleum products, chlorinated hydrocarbon solvents, the hydrostatic

testing of petroleum and natural gas storage tanks and pipelines, and the hydrostatic testing of water storage tanks and pipelines. Contaminated groundwater can only be discharged to state waters pursuant to this VPDES General Permit or an individual VPDES permit. The contractor must file a Registration Statement for coverage under VAG83 or file for an application for a VPDES Individual Permit.

Short-term discharges (14 days or less in duration) have immediate coverage under the VAG83 permit and are not required to submit a registration statement to the VDEQ to apply for permit coverage. However, written notification is required to be submitted to the VDEQ within 14 days of the completion of the discharge. This coverage may be used for emergency and planned short duration discharges. However, the contractor is still responsible for ensuring the discharge meets the criteria contained in the General Permit.

2. Sanitary Sewer System

When construction dewatering activities are discharged into the sanitary sewer, the discharge activities must be done in accordance with the HRSD Letter of Authorization. If the accepting sewage pump station is owned by a locality, the locality shall be contacted to confirm the volume of groundwater that can be discharged into its system.

For projects with high volume discharges or high concentrations of contaminants, the contractor may secure both the HRSD Letter of Authorization as well as the VDEQ General Permit to have the maximum flexibility during the discharge period. VDEQ constituent threshold levels in water discharged directly to state waters are more stringent than those that can be accepted by HRSD; however, the discharge of groundwater is not limited by volume. The HRSD Letter of Authorization contains a maximum allowable volume of groundwater discharge based on the capacity of the downstream sewage pump station.

Effluent from dewatering activities must be filtered to remove pollutants including sediment through an approved sediment trapping device, or both, prior to release to state waters, the storm sewer system, or sanitary sewer system as required by the Virginia erosion and sediment control regulations (9 VAC 25-850-10 et seq.), the Virginia stormwater management regulations (9 VAC 25-870-10 et seq.) and the Virginia Stormwater Management Program Construction General Permit regulations (9 VAC 25-880-10 et seq.) as applicable.

If treatment is necessary, the groundwater treatment system shall be designed to remove sediments from the discharge and have the capacity to fully treat groundwater to the applicable discharge standard at the maximum expected concentrations of the constituent(s) of concern and at maximum discharge rate of the pump(s) being used for the anticipated duration of dewatering. EPA recommended treatment for constituents of concern is contained in **Attachment B**.

E. Contacts

Permit Contacts:
HRSD: Pretreatment & Pollution Prevention Division
North Shore……... (757) 833-1750
South Shore…….…….. (757) 460-7048

VDEQ: Tidewater Regional Office
Remediation Specialist…….…….… (757) 518-2117
Main Number……..……... (757) 518-2000
https://www.deq.virginia.gov/Home/Components/StaffDirectory/StaffDirectory/1182/478

VDEQ: Piedmont Regional Office
Remediation Specialist…….……..…….. (804) 527-5057
Main Number……..…….….. (804) 527-5020
https://www.deq.virginia.gov/Home/Components/StaffDirectory/StaffDirectory/1178/478

Attachment A: Anticipated Schedule from initial Investigation to General Permit Acquisition

Schedule of Events For CIP Dewatering Activities

Stage	Month 1				Month 2				Month 3				Project out to Bid	Month A				Month B				or until end of dewatering activities							
	Week 1	Week 2	Week 3	Week 4	Week 1	Week 2	Week 3	Week 4	Week 1	Week 2	Week 3	Week 4		Week 1	Week 2	Week 3	Week 4	Week 1	Week 2	Week 3	Week 4	Week 1	Week 2	Week 3	Week 4	Week 1	Week 2	Week 3	Week 4
Perform CHMRS and/or Phase I ESA																													
Phase II ESA (sampling & analyses)																													
Treatment System Design																													
Apply For & Acquire VPDES Permit																						Construction/Dewatering Activities Commence							
Apply For & Acquire HRSD Permit																						Construction/Dewatering Activities Commence							
Order Groundwater Treatment System																													
System Delivery & Onsite Set-up (if req.)																													
Inspection by HRSD personnel																													
Activate Permit (HRSD/VDEQ)																													
Dewatering Activities																													
Monthly VPDES Sampling and Reporting																													
Weekly HRSD Sampling & Reporting																													
Deactivate Permit(s) (HRSD/VDEQ)																													

Attachment B: Contamination Identification Table

Land Uses of Concern			Contaminant Identification			Subsurface Water Treatment Method
Zoning Indicator	**Zoning Code**	**Historical Land Use**	**Chemical Family**	**Chemical of Concern**	**Chemical Test**	**Treatment**
Specialty Industrial/ Commercial	I-1 I-2 B-1 B-1A B-2 B2 B-3 B-3A B-4 B-4C	Dry Cleaner	Chlorinated solvents	Trichloroethylene (TCE), Tetrachloroethylene (PCE), Vinyl Chloride (VC)	EPA Method 8260	Air-Stripping Activated Carbon Filtration Site Specific
		Paint Manufacturer/Manufactured Gas Plant	Inorganics Volatile Organic Compounds (VOCs) Semi-Volatile Organic Compounds (SVOCs)	PCBs RCRA 8 Metals Solvents	EPA Method 8151 EPA Methods 6010/7471 EPA Method 8260 EPA Method 8270	Filtration Air-Stripping Activated Carbon Filtration Site Specific
		Manufacturing (metal cleaning/degreasing, electronic manufacturing, vapor degreasing, cold cleaning)	Chlorinated solvents Inorganics	Trichloroethylene (TCE), tetrachloroethylene (PCE), 1,1,1-Tricholoroethane (TCA) Total Xylenes Metals	EPA Method 8260 EPA Methods 6010/7471	Air-Stripping Activated Carbon Filtration Filtration Site Specific
		Chemical Manufacture	Volatile Organic Compounds (VOCs)	Solvents	EPA Method 8260	Air-Stripping Activated Carbon Filtration
		Automotive/Boat Repair	Inorganics Volatile Organic Compounds (VOCs) Semi-Volatile Organic Compounds (SVOCs)	PCBs RCRA 8 Metals Solvents	EPA Method 8151 EPA Methods 6010/7471 EPA Method 8260 EPA Method 8270	Filtration Air-Stripping Activated Carbon Filtration Site Specific
		Shipyards	Inorganics Volatile Organic Compounds (VOCs) Semi-Volatile Organic Compounds (SVOCs)	PCBs RCRA 8 Metals Solvents	EPA Method 8151 EPA Methods 6010/7471 EPA Method 8260 EPA Method 8270	Filtration Air-Stripping Activated Carbon Filtration Site Specific
		Airport/ Gas Stations/UST/AST/Military Compounds	Volatile Organic Compounds (VOCs) Total Petroleum hydrocarbon (TPH) Lead	Benzene, Toluene, Ethylbenzene, Total Xylenes (BTEX) Methyl Tert-Butyl Ether (MTBE) Gasoline and Diesel Range Organics (TPH-GRO & TPH-DRO) Lead	EPA Method 8260 EPA Method 8015 EPA Method 6010	Filtration Air-Stripping Site Specific
		Hazardous Waste Generator -Small Scale	Site Specific	Site Specific	Site Specific	Site Specific
General Industrial/ Commercial		General Commercial/Industrial (specific use unknown)	Site Specific	Site Specific	Site Specific	Site Specific
Residential	R-40 R-30 R-20 R-15 R-10 R-7.5 R-5D R-5R R-5S R-2.5 A-12 A18 A-24 A36	Residential (Heating Oil Storage Tanks)	Total Petroleum hydrocarbon (TPH)	Diesel Range Organics (TPH-DRO)	EPA Method 8015	Air-Stripping Activated Carbon Filtration Site Specific
		Residential (Septic Fields Present)	Volatile Organic Compounds (VOCs) Human Bacteria/Viruses	Solvents ***Escherichia Coli*** (E. Coli) Fecal Coliform Enterococcus	EPA Method 8260 EPA Method 9223 (Membrane Filter Method) EPA Method 1600 (Membrane Filter Method)	Air-Stripping Filtration Site Specific
Agricultural	AG-1 AG-2	Farming/Agricultural Storage Facilities	Inorganics Volatile Organic Compounds (VOCs) Pesticides, Herbicides, Fungicides	S RCRA 8 Metals Solvents (DDT), Chlorodane, Atrizine, Endrin	EPA Method 8260 EPA Method 8081	Air-Stripping Activated Carbon Filtration Site Specific
Municipal	-	Landfills - Solid waste disposal facility (including on-site industrial and municipal)	Inorganics Volatile Organic Compounds (VOCs) Semi-Volatile Organic Compounds (VOCs)	PCBs RCRA 8 Metals Solvents	EPA Method 8151 EPA Methods 6010/7471 EPA Method 8260 EPA Method 8270	Filtration Air-Stripping Activated Carbon Filtration Site Specific
		Utility Easements - Wastewater or Oil/Gas Pipelines	Site Specific	Site Specific	Site Specific	Site Specific

Attachment B: Contamination Identification Table

Land Uses of Concern			Contaminant Identification			Subsurface Water Treatment Method
Zoning Indicator	**Zoning Code**	**Historical Land Use**	**Chemical Family**	**Chemical of Concern**	**Chemical Test**	**Treatment**
Specialty Industrial/ Commercial	I-1 I-2 B-1 B-1A B-2 B2 B-3 B-3A B-4 B-4C	Dry Cleaner	Chlorinated solvents	Trichloroethylene (TCE), Tetrachloroethylene (PCE), Vinyl Chloride (VC)	EPA Method 8260	Air-Stripping Activated Carbon Filtration Site Specific
		Paint Manufacturer/Manufactured Gas Plant	Inorganics Volatile Organic Compounds (VOCs) Semi-Volatile Organic Compounds (SVOCs)	PCBs RCRA 8 Metals Solvents	EPA Method 8151 EPA Methods 6010/7471 EPA Method 8260 EPA Method 8270	Filtration Air-Stripping Activated Carbon Filtration Site Specific
		Manufacturing (metal cleaning/degreasing, electronic manufacturing, vapor degreasing, cold cleaning)	Chlorinated solvents Inorganics	Trichloroethylene (TCE), tetrachloroethylene (PCE), 1,1,1-Tricholoroethane (TCA) Total Xylenes Metals	EPA Method 8260 EPA Methods 6010/7471	Air-Stripping Activated Carbon Filtration Filtration Site Specific
		Chemical Manufacture	Volatile Organic Compounds (VOCs)	Solvents	EPA Method 8260	Air-Stripping Activated Carbon Filtration
		Automotive/Boat Repair	Inorganics Volatile Organic Compounds (VOCs) Semi-Volatile Organic Compounds (SVOCs)	PCBs RCRA 8 Metals Solvents	EPA Method 8151 EPA Methods 6010/7471 EPA Method 8260 EPA Method 8270	Filtration Air-Stripping Activated Carbon Filtration Site Specific
		Shipyards	Inorganics Volatile Organic Compounds (VOCs) Semi-Volatile Organic Compounds (SVOCs)	PCBs RCRA 8 Metals Solvents	EPA Method 8151 EPA Methods 6010/7471 EPA Method 8260 EPA Method 8270	Filtration Air-Stripping Activated Carbon Filtration Site Specific
		Airport/ Gas Stations/UST/AST/Military Compounds	Volatile Organic Compounds (VOCs) Total Petroleum hydrocarbon (TPH) Lead	Benzene, Toluene, Ethylbenzene, Total Xylenes (BTEX) Methyl Tert-Butyl Ether (MTBE) Gasoline and Diesel Range Organics (TPH-GRO & TPH-DRO) Lead	EPA Method 8260 EPA Method 8015 EPA Method 6010	Filtration Air-Stripping Site Specific
		Hazardous Waste Generator -Small Scale	Site Specific	Site Specific	Site Specific	Site Specific
General Industrial/ Commercial		General Commercial/Industrial (specific use unknown)	Site Specific	Site Specific	Site Specific	Site Specific
Residential	R-40 R-30 R-20 R-15 R-10 R-7.5 R-5D R-5R R-5S R-2.5 A-12 A18 A-24 A36	Residential (Heating Oil Storage Tanks)	Total Petroleum hydrocarbon (TPH)	Diesel Range Organics (TPH-DRO)	EPA Method 8015	Air-Stripping Activated Carbon Filtration Site Specific
		Residential (Septic Fields Present)	Volatile Organic Compounds (VOCs) Human Bacteria/Viruses	Solvents ***Escherichia Coli*** (E. Coli) Fecal Coliform Enterococcus	EPA Method 8260 EPA Method 9223 (Membrane Filter Method) EPA Method 1600 (Membrane Filter Method)	Air-Stripping Filtration Site Specific
Agricultural	AG-1 AG-2	Farming/Agricultural Storage Facilities	Inorganics Volatile Organic Compounds (VOCs) Pesticides, Herbicides, Fungicides	S RCRA 8 Metals Solvents (DDT), Chlorodane, Atrizine, Endrin	EPA Method 8260 EPA Method 8081	Air-Stripping Activated Carbon Filtration Site Specific
Municipal	-	Landfills - Solid waste disposal facility (including on-site industrial and municipal)	Inorganics Volatile Organic Compounds (VOCs) Semi-Volatile Organic Compounds (VOCs)	PCBs RCRA 8 Metals Solvents	EPA Method 8151 EPA Methods 6010/7471 EPA Method 8260 EPA Method 8270	Filtration Air-Stripping Activated Carbon Filtration Site Specific
		Utility Easements - Wastewater or Oil/Gas Pipelines	Site Specific	Site Specific	Site Specific	Site Specific

Section 36 - Standard Details

A. Introduction – Standard Details have been developed to provide uniformity throughout HRSD. These details can be provided in electronic format. The FIRM must review all the Standard Details and select the ones that are appropriate for any given project. The FIRM must develop other details as required to incorporate into Bid Documents.

B. Listing of Standard Details – These standard details are available in AutoCAD format upon request. These listed Standard Details are included as PDF files in this manual.

1. Series 100: Miscellaneous

100	Standard Cover Sheet
101	Exterior Bollard Detail
102	Bollard Location Detail
103	Load Test Hinged Bank Box
104A/B	Flush Mount Groundwater Monitoring Well
105	Recovery Sheet Template

2. Series 200: Collection Systems and Appurtenances

200A/B	Precast Concrete Manhole with Extended Monolithic Base
201	Precast Concrete Shallow Manhole with Extended Base
202A/B	Sanitary Sewer Straddle Manhole
203	Connection into Existing Manholes
204	Manhole Invert Shaping
205	Precast Concrete or Brick Manhole Inside Gravity Drop Connection to Existing Manhole
206	Precast Concrete Outside Drop Manhole
207	Precast Concrete or Brick Manhole Inside Force Main Drop Connection to Existing Manhole
208	Precast Concrete Sanitary Sewer Manhole Adjustment
209	Manhole Insert
226	Service Lateral and Gravity Main Connection to Existing Stub-out
227	Standard Manhole Frame and Cover
228	Manhole Frame and Cover – Watertight
229A/B	Sanitary Sewer Lateral Installation
230	Sanitary Sewer Service Connection for New or Existing Gravity Mains
231	Sanitary Service Lateral Deactivation
232	Alternate Service Lateral Connection to Existing Gravity Sewer Main
233	Permanent Sewer Lateral Deactivation at HRSD Manhole
251	Sanitary Sewer Service Clean Out Frame and Cover (Non-Traffic Rated)
252	Sanitary Sewer Service Clean Out Frame and Cover (Traffic Rated)
276	Vacuum Air Intake Valve
277	Lateral Connection to Existing Vacuum Valve Pit
278	Vacuum System Division Valve

3. Series 300: Interceptors and Appurtenances

300	Connection to Existing HRSD Valve (No Potential for Additional Development)
301	Connection to Existing HRSD Valve (Additional Development is Possible)
302	Connection to Existing HRSD Valve (Additional Development is Imminent)
303	New Wet Taps (No Potential for Additional Development)
304	New Wet Taps (Additional Development is Possible)
305	New Wet Taps (Additional Development is Imminent)
306A	2” Private Force Main Connection to Existing 2” HRSD Force Main Stub
306B	Valve Vault for 2” HRSD Valve
306C	Vault Lid for 2” HRSD Valve
307	Lawnes Point Private Connection Detail
308	Private Force Main to HRSD Asset
309	New Grinder Pit Connection to Existing HRSD Force Main
326	Horizontal Gate Valve
327	Vertical Gate Valve
328	Valve Box and Riser for Mainline Valve
329	Valve Box and Riser for Bypass Valves
330	Valve Riser Adjustment
331A/B	Roadside Ditch – Valve Box
332	Tracer Wire Locator Box
351	Manual Air Vent
352A/B	Air Release Valve Box Adjustment
353	Roadside Ditch – Air Vent
354	Air Vent Frame and Cover
355	Standard Air Vent Detail for Future Automatic Air Release Valves
376	Tapping Saddle for Cast Iron, Ductile Iron, Reinforced Concrete and PVC Pipes
377	Tapping Saddle for Concrete Cylinder Pipe
378A/B	Steel Casing Detail
379	Ductile Iron MJ Spigot to Concrete Transition Adaptor (Male)
380	Ductile Iron MJ Spigot to Concrete Transition Adaptor (Female)
381	Pressure Sensor Installation
382	Concrete Cylinder Pipe Line-Stop Detail
383	Ductile / Cast Iron Line Stop Detail

4. Series 400: Pump Stations and PRS

400A/B	Small Communities Sample Design Detail – Submersible Pump Station
401A/B	Underground Storage Tank
402A/B	Underground Fuel Tank

5. Series 500: Cathodic Protection for Pipes

500A/B	Cathodic Protection Test Station and Terminal Board Wiring
501	Cathodic Protection Isolation Detail

502 Anode Test Station
503 Monitoring Test Station
504 Monitoring Test Station (with Riser)
505 Isolation Flange Test Station
506 Isolation Flange Test Station (with Riser)
507 Anode Header Cable Splice – Wye Type
508A Typical Thermite Weld Procedures on Bonding Plate
508B Typical Royston Handy Cap IP™ Installation
509 Isolating Flange Kit
510 Typical Bonding Plate
511 Copper Wire to Pipe Pin Brazing Procedures
521 Ductile Iron Pipe Galvanic System AC Ground Mat
522 Ductile Iron Pipe Galvanic System Insulating Corporation
523 Ductile Iron Pipe Galvanic System Main Bonding

6. Series 600: Cathodic Protection for Buildings
600 Installation of Discrete Galvanic Anodes
601 Installation of Distributed Galvanic Anodes
602 Distributed Galvanic Anodes at Top of Wall
603 Installation of Drilled-in Galvanic Anodes
604 Conductive Mortar Bridge for use with High Resistivity Repair Mortars
605 Typical Galvanic Anode Layout
606 Typical Galvanic Anode Connections
626 Removal of Unsound Concrete Typical Section
627 Concrete Rebuild Typical Section
628 Concrete Rebuild to Provide Minimum Cover Typical Section
629 Removal of Unsound Concrete Typical Corner Section
630 Concrete Rebuild Typical Corner Section
631 Reinforcing Section Loss Table
632 Lap Splice – Option 1
633 Lap Splice Lengths – Option 1
634 Mechanical Splice – Option 2 Typical Removal Section
635 Mechanical Splice – Option 2 Typical Rebuild Section
636 Weld Splice – Option 3
637 Weld Splice Details A – Option 3
638 Weld Splice Details B – Option 3
639 Supplemental Reinforcement Requirements
640 Adhesive Grouted Dowel Layout
641 Typical Concrete Rebuild Section at Embed Plate
642 Shallow Depth (2” Max) Concrete Rebuild Horizontal
643 Shallow Depth (2” Max) Concrete Rebuild Vertical
644 Partial Depth Core Hole Concrete Rebuild
645 Full Depth Core Hole Concrete Rebuild
646A/B Typical Spall Repair with Exposed Reinforcing Steel
651 Typical Sealant Details

7. <u>Series 700: Electrical and Instrumentation Details</u>

700	Wet Well Pump Wiring Electrical Backboard Detail
701A/B	Antenna Installation Detail
702A/B	Intrinsic Safety Panel
703	Temporary Pump Enclosure Detail
704	Actuator Vault Electrical Backboard Detail
705	Instrument Vault Electrical Plan
706	Actuator Vault Electrical Plan
707A/B	Wet Well Instrumentation Installation Detail

HAMPTON ROADS SANITATION DISTRICT

PROJECT TITLE

CIP NUMBER

(LOCATION: CITY/COUNTY & STATE)

DATE (MONTH & YEAR)

LEGEND
(ON SEPARATE PAGE FOR LARGE PROJECTS)

VICINITY MAP

MAP SCALE

LOCATION MAP

MAP SCALE

INDEX TO DRAWINGS
(ON SEPARATE PAGE FOR LARGE PROJECTS)

ENGINEER'S NAME/LOGO/CONTACT

RESERVE SPACE FOR DRAWING ADDITION OF: CONTRACTOR, NAME & OTHER INFORMATION AS REQUIRED (PIPE MANUFACTURER, ETC.)

VERTICAL DATUM:

ENGINEER'S SEAL

STANDARD DESIGN DETAIL

STANDARD COVER SHEET

DRAWING NO. 100

SHEET 1 OF 1

DATE 1/2021

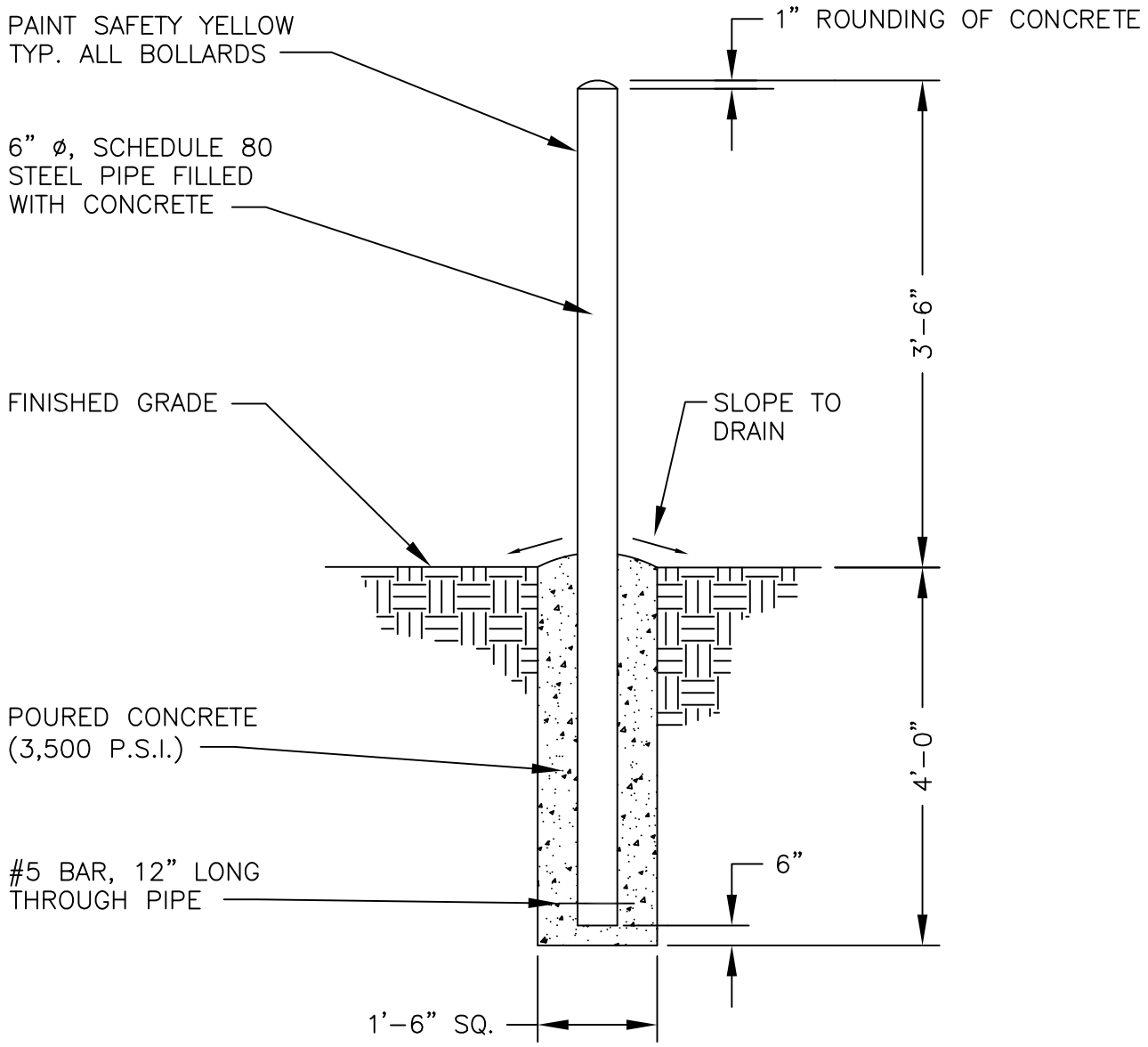

NOT TO SCALE

HRSD	STANDARD DESIGN DETAIL	DRAWING NO. 101
		SHEET 1 OF 1
	EXTERIOR BOLLARD DETAIL	DATE 1/2021

Main Line valve in agricultural area

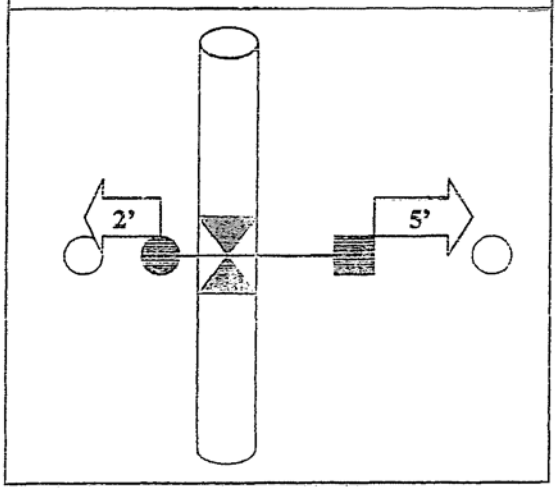

Air Vent in agricultural area

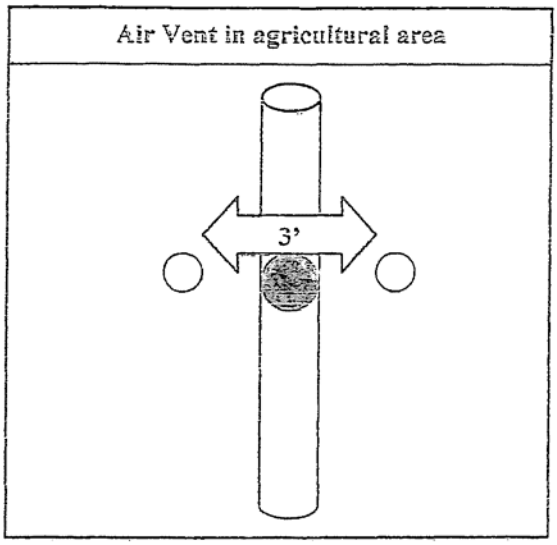

Branch valve in agricultural area

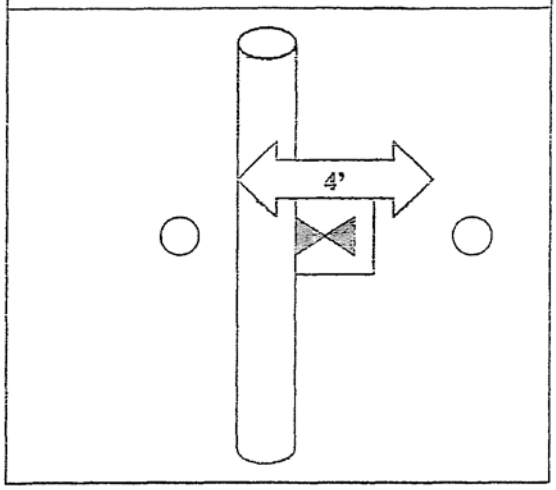

Cathodic test station in agricultural area

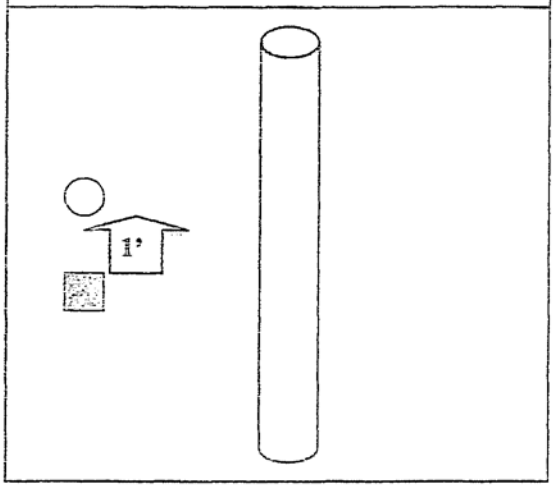

Branch valve or Air vent in agricultural area next to roadside

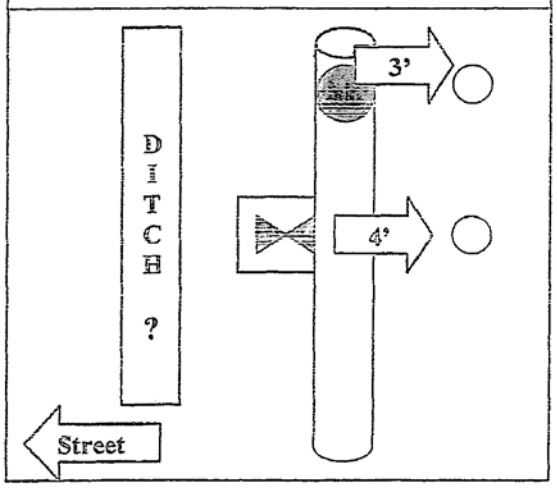

All measurements from center of casting

HRSD	STANDARD DESIGN DETAIL	DRAWING NO. 102
		SHEET 1 OF 1
	BOLLARD LOCATION DETAIL	DATE 1/2021

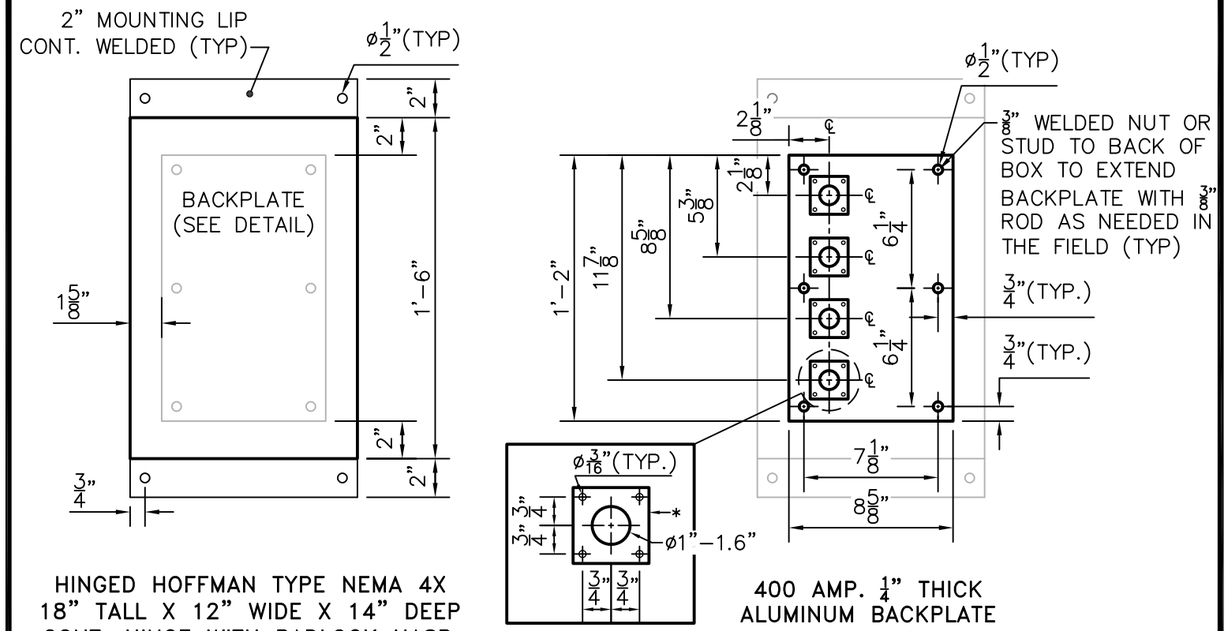

HINGED HOFFMAN TYPE NEMA 4X
18" TALL X 12" WIDE X 14" DEEP
CONT. HINGE WITH PADLOCK HASP.
STAINLESS STEEL

ENLARGEMENT

400 AMP. 1/4" THICK
ALUMINUM BACKPLATE
14" X 8 5/8"

*SQUARE DEVICE BY OTHERS

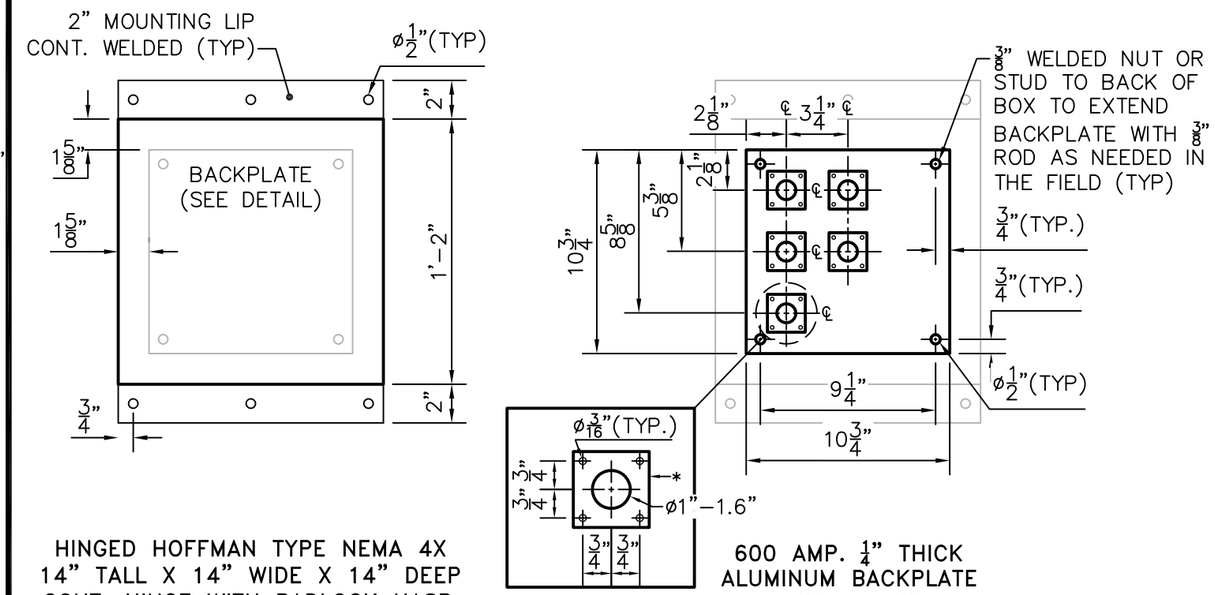

HINGED HOFFMAN TYPE NEMA 4X
14" TALL X 14" WIDE X 14" DEEP
CONT. HINGE WITH PADLOCK HASP.
STAINLESS STEEL

ENLARGEMENT

600 AMP. 1/4" THICK
ALUMINUM BACKPLATE
10 3/4" X 10 3/4"

*SQUARE DEVICE BY OTHERS

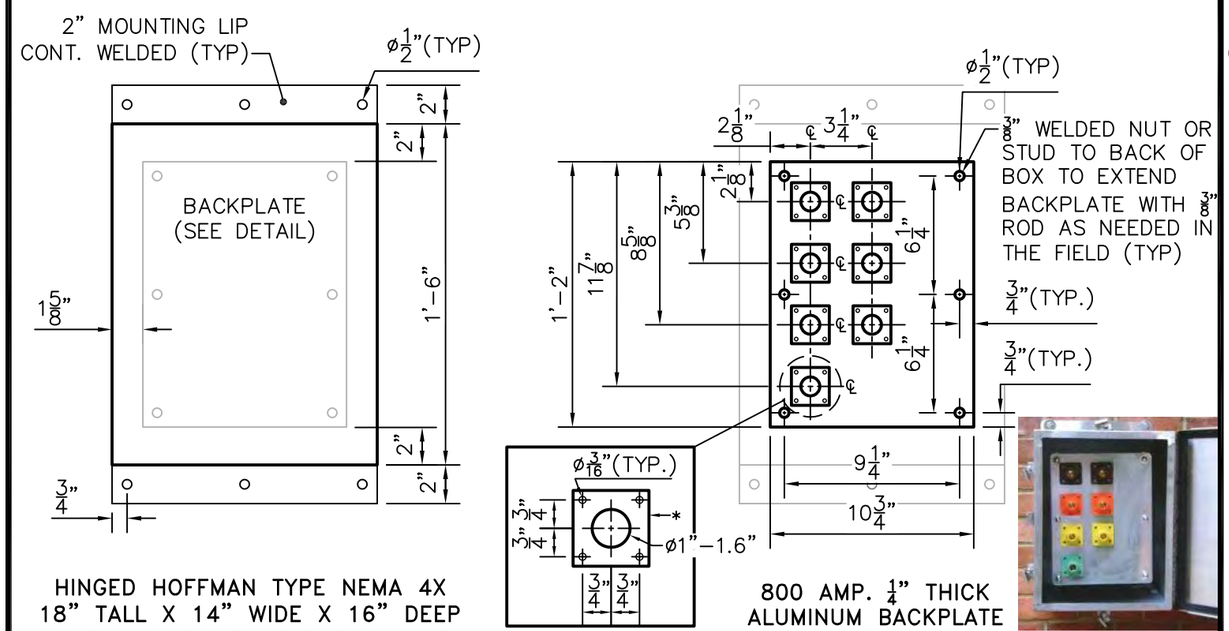

HINGED HOFFMAN TYPE NEMA 4X
18" TALL X 14" WIDE X 16" DEEP
CONT. HINGE WITH PADLOCK HASP.
STAINLESS STEEL

ENLARGEMENT

800 AMP. 1/4" THICK
ALUMINUM BACKPLATE
14" X 10 3/4"

PHOTO IMAGE

*SQUARE DEVICE BY OTHERS

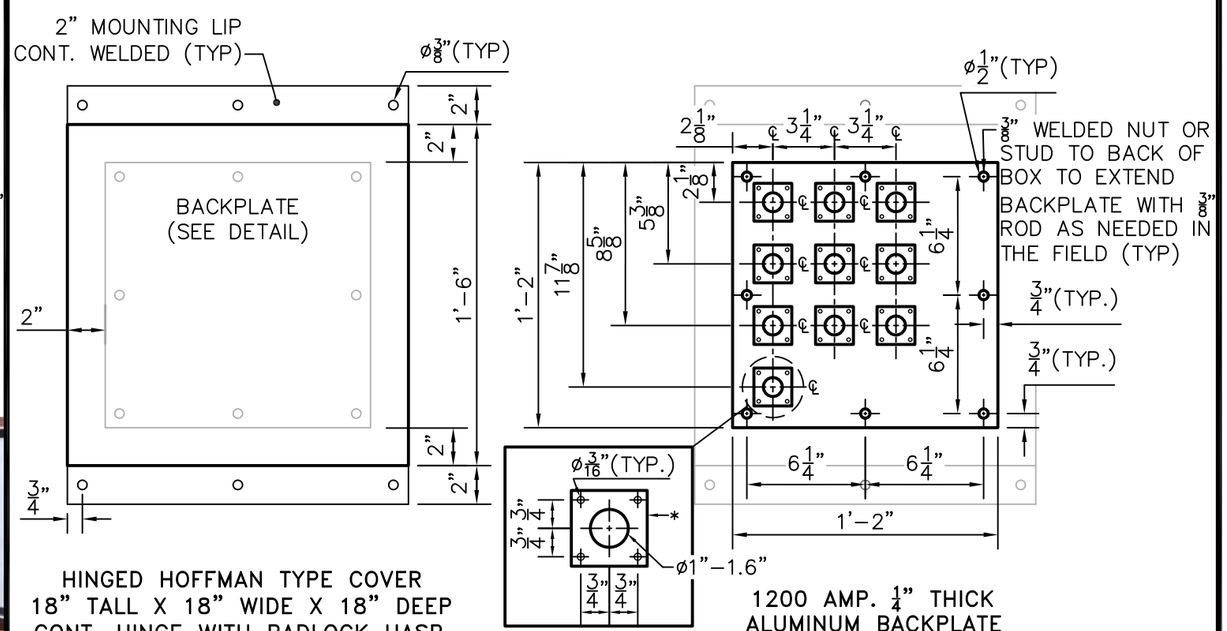

HINGED HOFFMAN TYPE COVER
18" TALL X 18" WIDE X 18" DEEP
CONT. HINGE WITH PADLOCK HASP.
STAINLESS STEEL (NEMA-12 PAINTED)

ENLARGEMENT

1200 AMP. 1/4" THICK
ALUMINUM BACKPLATE
14" X 14"

*SQUARE DEVICE BY OTHERS

NOTES:

1. TYPICAL DIMENSIONS SHOWN FOR VARIOUS SERVICE SIZES. BOX MUST BE FIELD VERIFIED PRIOR TO FABRICATION AND INSTALLATION.

HRSD

STANDARD DESIGN DETAIL

LOAD TEST HINGED BANK BOX

DRAWING NO.	103
SHEET	1 OF 1
DATE	1/2021

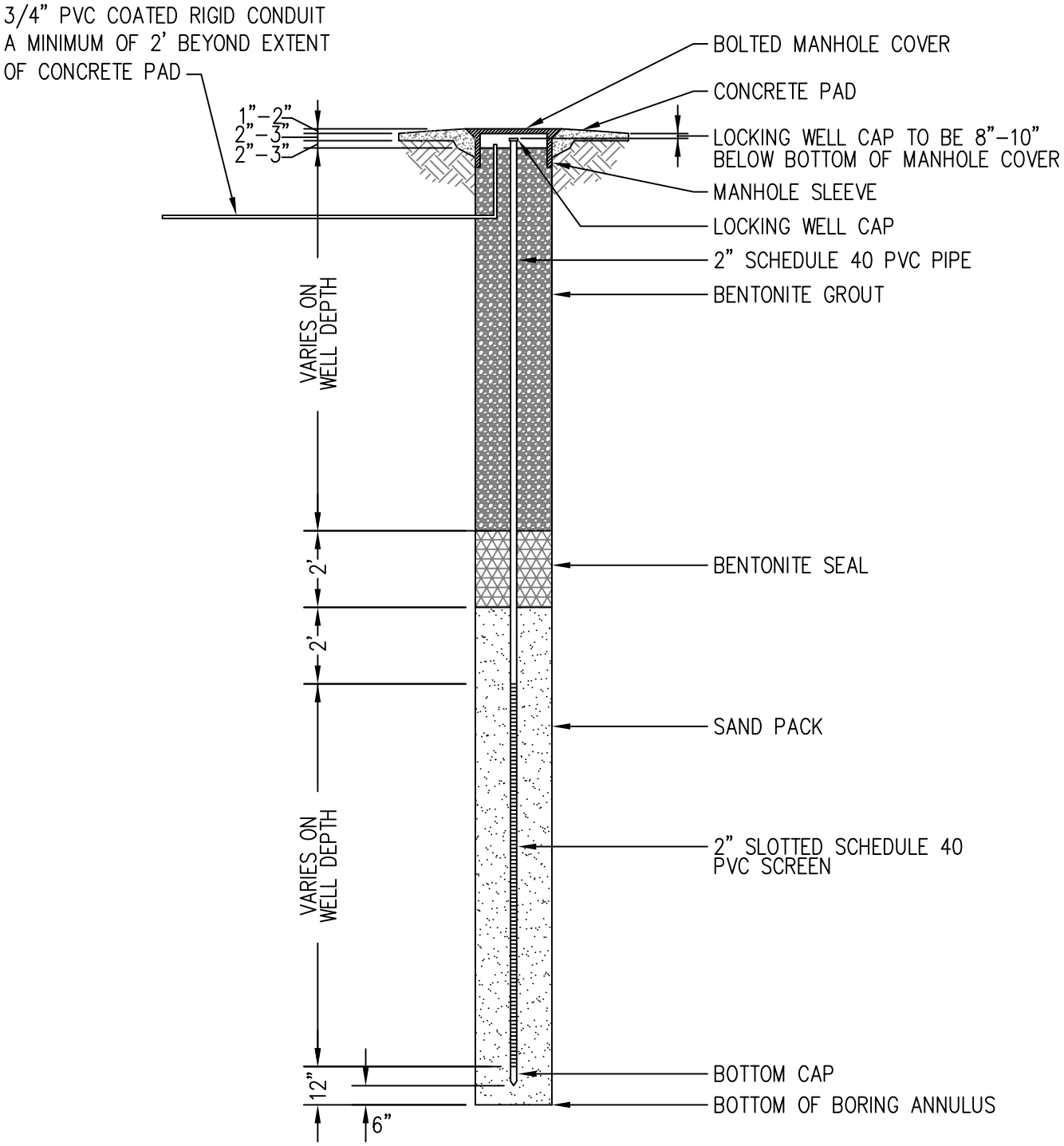

*SEE PAGE 2 FOR DETAIL NOTES

NOT TO SCALE

HRSD	STANDARD DESIGN DETAIL	DRAWING NO. 104A
		SHEET 1 OF 2
	FLUSH–MOUNT GROUNDWATER MONITORING WELL	DATE 1/2021

WELL DEPTH (FT)	PVC PIPING DIAMETER	SCREEN LENGTH* (FT)	SLOTTING SIZE	RISER PIPE LENGTH (FT)	FILTER SAND MEDIA	SEALING MEDIA	SURFACE FINISHING
VARIES	0.75 ID	VARIES	0.010	10'–15' DEPTH=2.5' 15'–20' DEPTH=3.5'	#2	BENTONITE GROUT/NEAT CEMENT	FLUSH MOUNT CASING

*SCREENS LENGTHS COME IN 3FT AND 5FT SECTIONS

NOTES:

1. ONCE THE SCREEN INTERVAL IS INSTALLED, A MINIMUM OF 2 FEET OF SAND SHOULD BE PLACED ABOVE THE SCREEN. ONCE INSTALLED, A MINIMUM OF ONE FOOT THICK SEAL OF BENTONITE SLURRY OR NEAT CEMENT GROUT SHOULD BE PLACED.
2. AT FINAL SURFACE GRADE, THE MONITORING WELL SHALL BE PROTECTED WITH FLUSH MOUNT RISER CASING.
3. UPON COMPLETION OF WELL INSTALLATION, THE CONTRACTOR WILL DEVELOP THE WELL TO REMOVE SILT FROM WITHIN THE SCREEN INTERVAL.

LOCATION SKETCH

NOT TO SCALE

SITE ADDRESS: XXXXXXXXXXX

"STATION NAME" PUMP STATION

#XXX

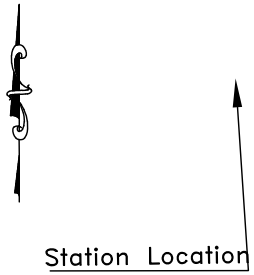

VICINITY MAP

SCALE: 1"= 1 MILE

HORIZONTAL CONTROL:

VIRGINIA STATE PLANE COORDINATE SYSTEM, SOUTH ZONE
NORTH AMERICAN DATUM 1983/1996 CORS ADJUSTMENT (US SURVEY FOOT)

NORTH (FT):	X,XXX,XXX.XX	EAST (FT):	XX,XXX,XXX.XX
NORTH (m):	X,XXX,XXX.XXX	EAST (m):	X,XXX,XXX.XXX
LATITUDE:	XX°XX'XX.XXXXX" N	LONGITUDE:	XX°XX'XX.XXXXX" W
SCALE FACTOR:	X.XXXXXXXXX	CONVERGENCE:	X°XX'XX.XXXXX"

VERTICAL CONTROL:

NORTH AMERICAN VERTICAL DATUM OF 1988 (NAVD 88)
U.S. SURVEY FEET (DIFFERENTIAL LEVELING)
ELEVATION XX.XX'

DATE ESTABLISHED: _____
GPS DATE: XX/XX/XXXX
DATE RECOVERED: _____

DESCRIPTION:

TO REACH THE DISK FROM XXXXXXXXX

HRSD
Cleaning wastewater every day for a better Bay.
2389 G AVENUE, NEWPORT NEWS, VA 23602

HRSD

STANDARD DESIGN DETAIL

RECOVERY SHEET TEMPLATE

DRAWING NO.	105
SHEET	1 OF 1
DATE	1/2021

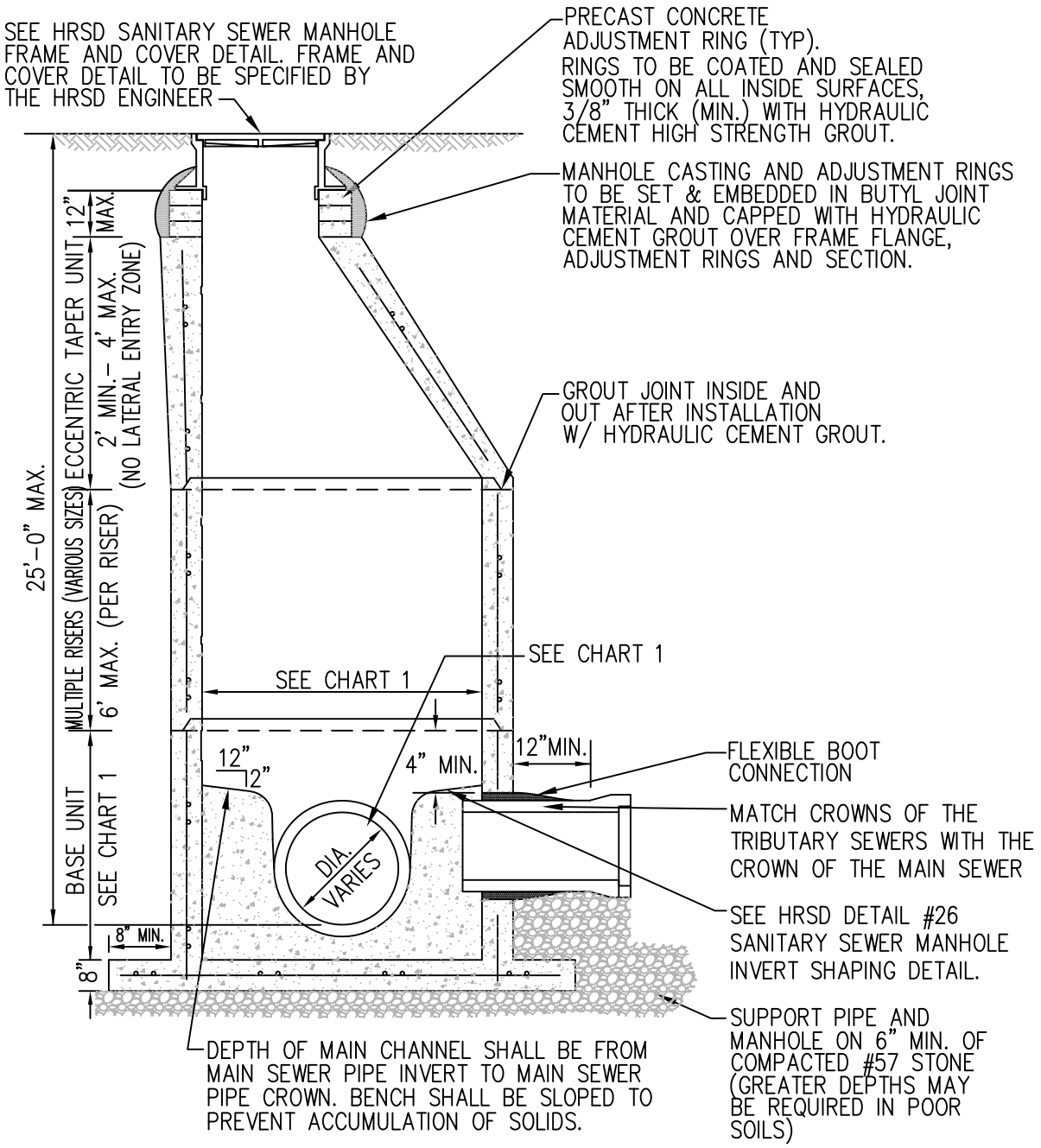

SEE DRAWING #200B FOR NOTES.

NOT TO SCALE

HRSD	STANDARD PRECAST CONCRETE	DRAWING NO. 200A
		SHEET 1 OF 2
	MANHOLE W/EXTENDED MONOLITHIC BASE	DATE 1/2021

CHART 1

PIPE SIZE	MANHOLE DIAMETER	BASE UNIT HEIGHT	WALL THICKNESS–MIN.
< OR = 24"	48"	24"–48"	5"
27"–36"	60"	60" (MIN.)	6"
42"	72"	72" (MIN.)	7"
48"	72"	48" (MIN.)	7"

NOTES:

1. PRECAST CONCRETE MANHOLE TO BE IN COMPLIANCE WITH ASTM C–478.
2. PROVIDE A MAXIMUM OF TWO LIFT HOLES PER SECTION. PLUG LIFT HOLES WATERTIGHT WITH RUBBER PLUGS AND GROUT AFTER INSTALLATION.
3. REGARDLESS OF PIPE SIZE, INSIDE DIAMETER OF MANHOLE SHALL BE 60" (MIN.) WHEN MANHOLE DEPTH IS 12' OR GREATER. 60" DIAMETER SHALL BE CONTINUOUS UP TO CONE SECTION.
4. MAXIMUM OF FOUR LATERALS PER MANHOLE.
5. ALL MANHOLES SHALL RECEIVE CONSHIELD ADDITIVE OR APPROVED EQUAL DURING CASTING.
6. CONCRETE USED TO FORM THE BENCH SHALL RECEIVE THE CONSHIED ADDITIVE, OR APPROVED EQUAL.
7. COAT EXTERIOR OF MANHOLE IN ACCORDANCE WITH THE HRSD COATINGS MANUAL, CURRENT REVISION, COATING SYSTEM E–2–C. COATING SHALL BE FIELD APPLIED.

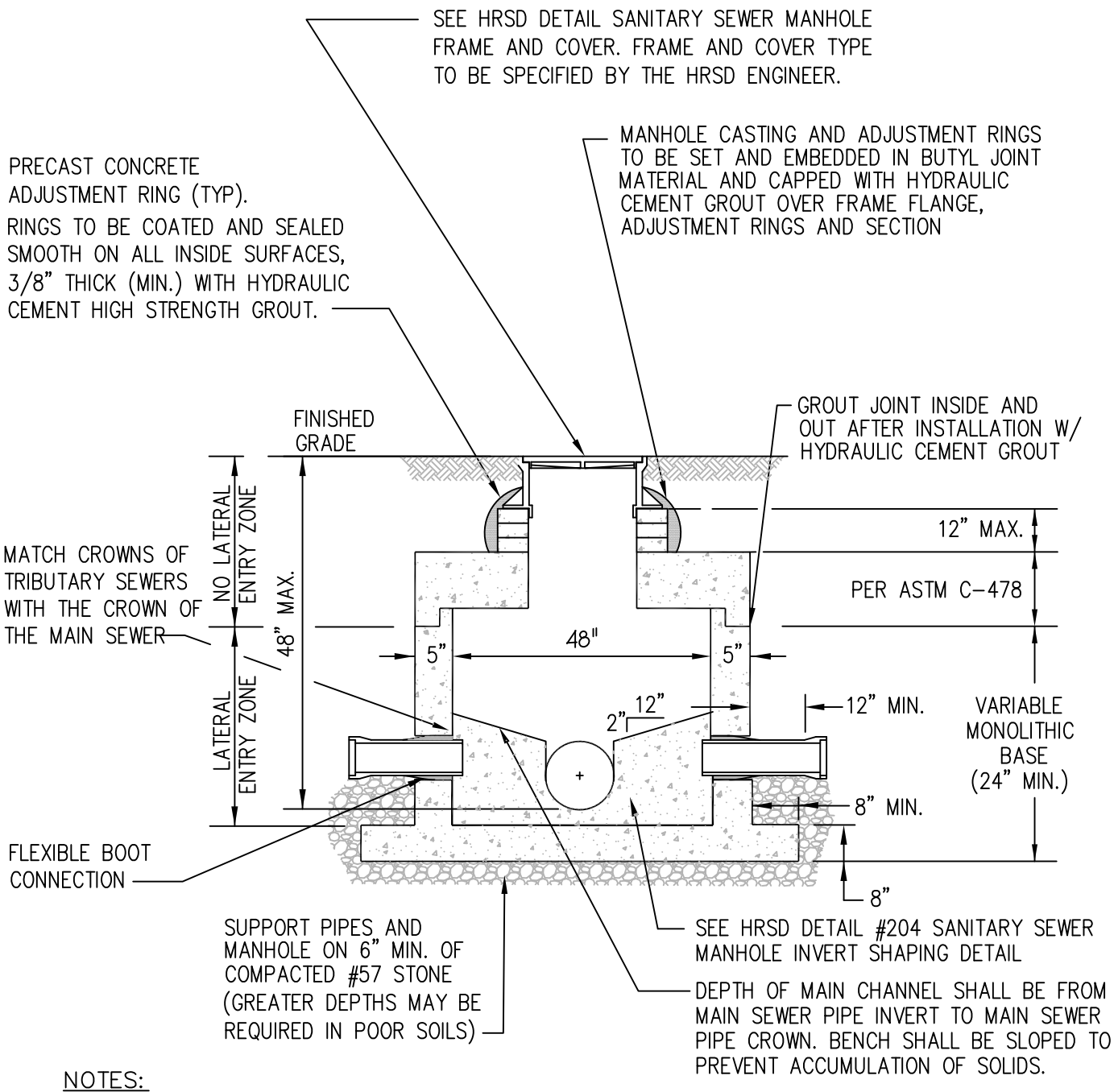

NOTES:

1. FLAT TOP CAN BE REPLACED W/ 1'-4" ECCENTRIC SHALLOW CONE IF APPROVED BY HRSD.
2. PRECAST MANHOLE TO BE IN COMPLIANCE WITH ASTM C-478.
3. PROVIDE A MAXIMUM OF TWO LIFT HOLES PER SECTION. PLUG LIFT HOLES WATERTIGHT WITH RUBBER PLUGS AND GROUT AFTER INSTALLATION.
4. ALL MANHOLES SHALL RECEIVE CONSHIELD ADDITIVE OR APPROVED EQUAL DURING CASTING.
5. CONCRETE USED TO FORM THE BENCH SHALL RECEIVE THE CONSHIELD ADDITIVE, OR APPROVED EQUAL.
6. COAT EXTERIOR OF MANHOLE IN ACCORDANCE WITH THE HRSD COATINGS MANUAL, CURRENT REVISION, COATING SYSTEM E-2-C. COATING SHALL BE FIELD APPLIED.

NOT TO SCALE

HRSD	STANDARD DESIGN DETAIL – PRECAST	DRAWING NO. 201
		SHEET 1 OF 1
	CONCRETE SHALLOW MANHOLE WITH EXTENDED BASE	DATE 1/2021

NOTE:

MANHOLE MAXIMUM DEPTH = 25'-0"
MANHOLE DEPTH DEFINED AS LOWEST INVERT TO TOP OF RIM

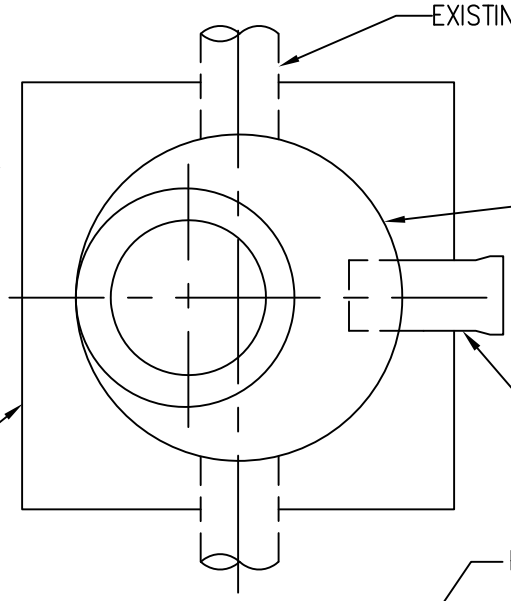

PLAN

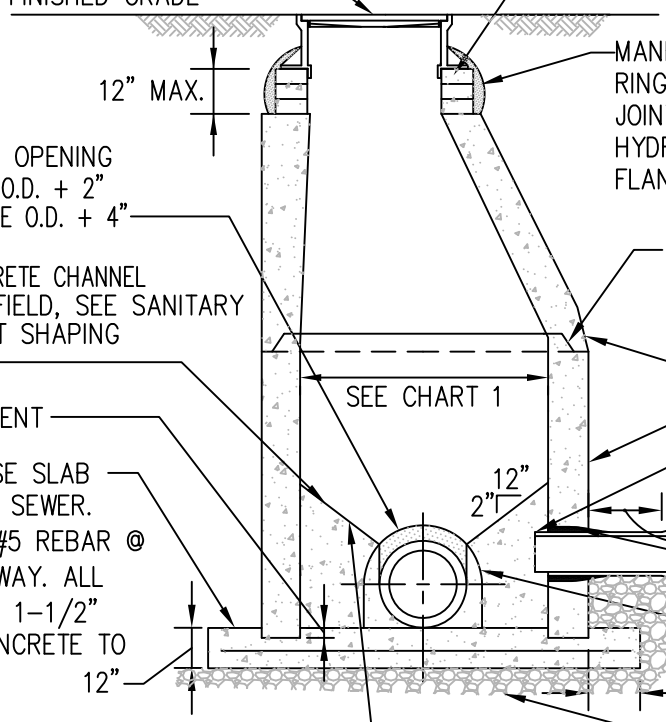

SEE DETAIL #202B, SHEET 2 OF 2 FOR NOTES.

NOT TO SCALE

HRSD	STANDARD DESIGN DETAIL	DRAWING NO. 202A
		SHEET 1 OF 2
	SANITARY SEWER STRADDLE MANHOLE	DATE 1/2021

CHART 1

PIPE SIZE	MANHOLE DIAMETER	BASE UNIT HEIGHT	WALL THICKNESS–MIN.
< OR = 24"	48"	24"–48"	5"
27"–36"	60"	60" (MIN.)	6"
42"	72"	72" (MIN.)	7"
48"	72"	48" (MIN.)	7"

NOTES:

1. PRECAST CONCRETE MANHOLE TO BE IN COMPLIANCE WITH ASTM C–478.
2. PROVIDE A MAXIMUM OF TWO LIFT HOLES PER SECTION. PLUG LIFT HOLES WATERTIGHT WITH RUBBER PLUGS AND GROUT AFTER INSTALLATION.
3. REGARDLESS OF PIPE SIZE, INSIDE DIAMETER OF MANHOLE SHALL BE 60" (MIN.) WHEN MANHOLE DEPTH IS 12' OR GREATER. 60" DIAMETER SHALL BE CONTINUOUS UP TO CONE SECTION.
4. MAXIMUM OF FOUR LATERALS PER MANHOLE.
5. ALL MANHOLES SHALL RECEIVE CONSHIELD ADDITIVE OR APPROVED EQUAL DURING CASTING.
6. COAT EXTERIOR OF MANHOLE IN ACCORDANCE WITH HRSD COATINGS MANUAL, CURRENT REVISION, COATING SYSTEM E–2–C. COATING SHALL BE FIELD APPLIED.
7. CONRETE USED TO FORM THE BENCH SHALL RECEIVE THE CONSHIELD ADDITIVE, OR APPROVED EQUAL.

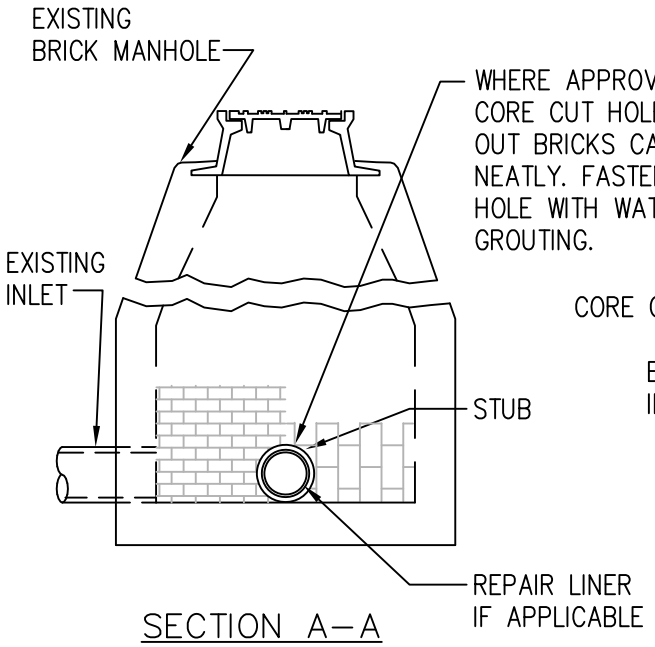

SECTION A–A

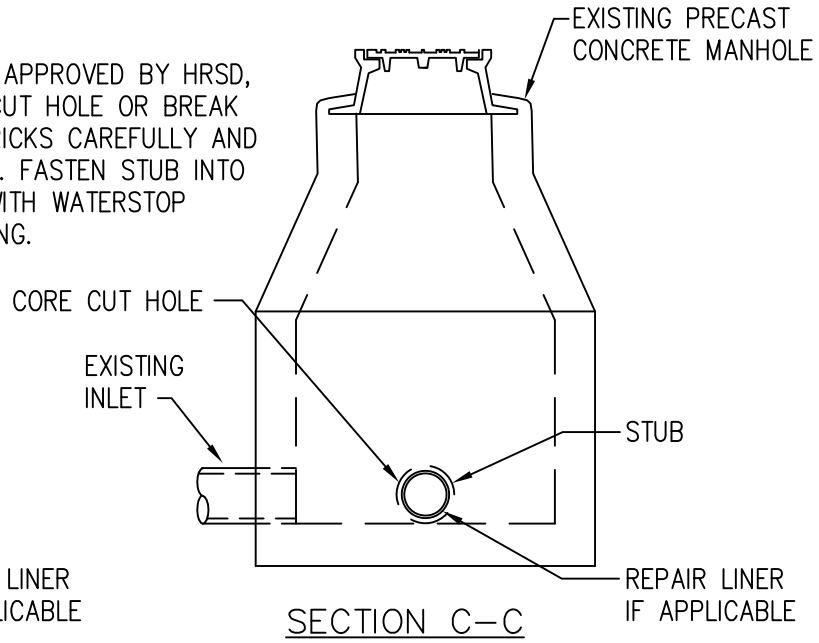

SECTION C–C

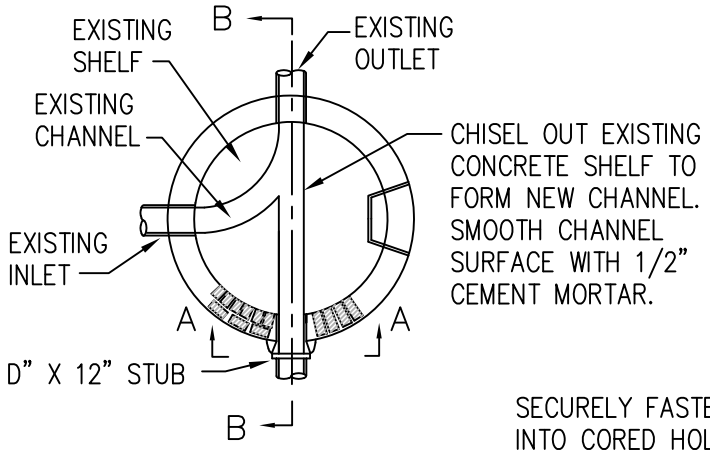

BASE PLAN OF BRICK MANHOLE

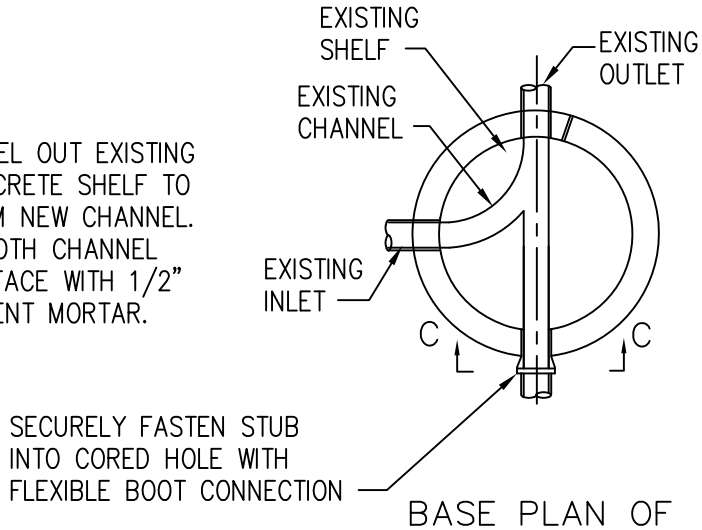

BASE PLAN OF PRE–CAST MANHOLE

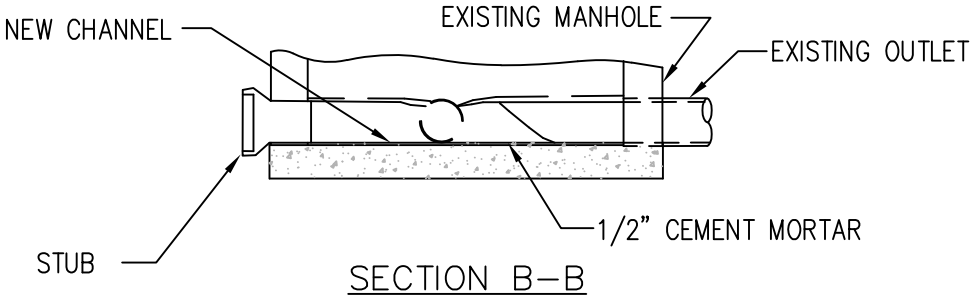

SECTION B–B

NOTES:
MATCH CROWN OF NEW PIPE STUB TO EXISTING PIPE CROWNS.

NOT TO SCALE

HRSD	STANDARD DESIGN DETAIL	DRAWING NO. 203
		SHEET 1 OF 1
	CONNECTION INTO EXISTING MANHOLES	DATE 1/2021

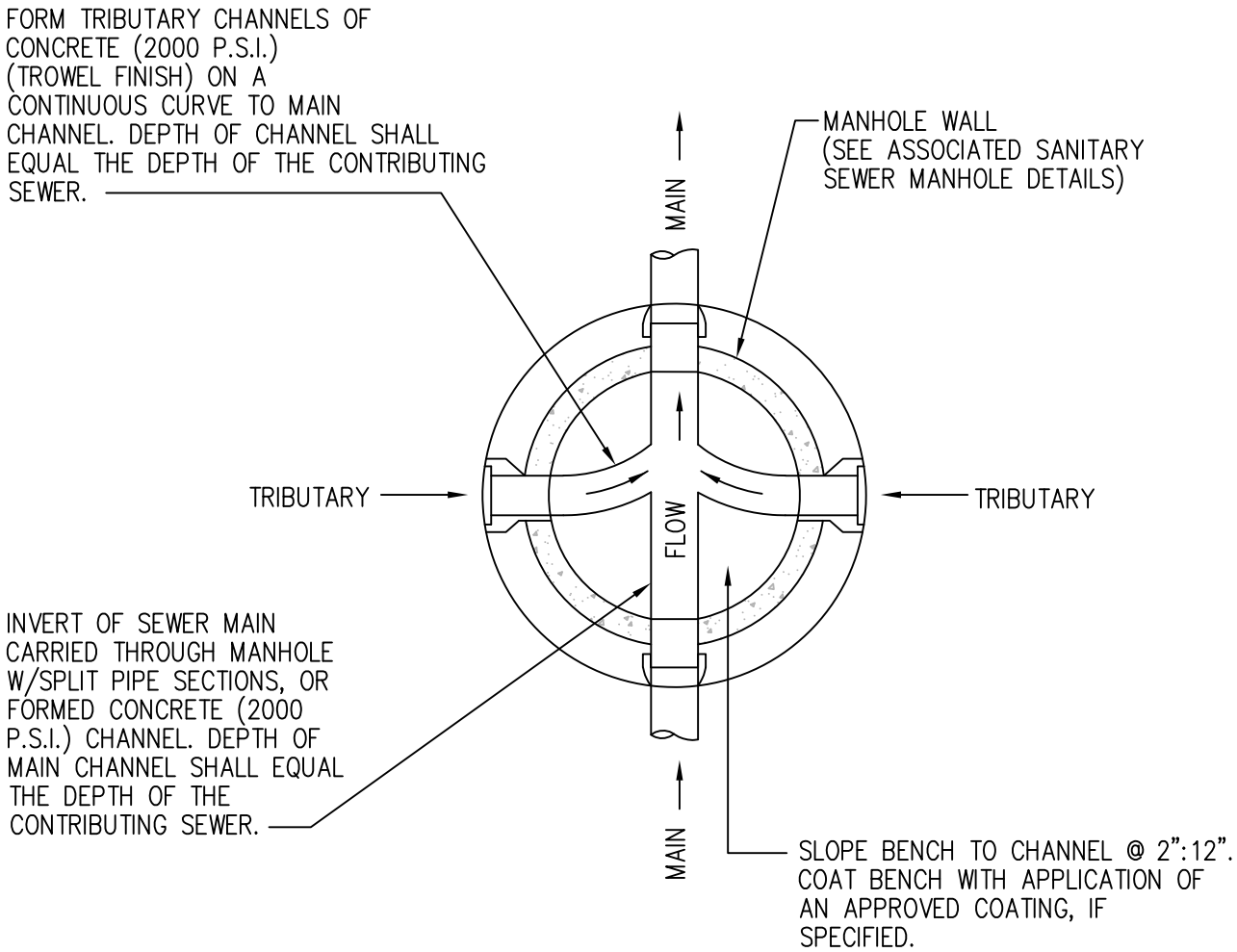

NOTES:

1. SPLIT PIPE ONLY ALLOWED IN STRADDLE MANHOLES.
2. CONCRETE USED TO FORM THE BENCH SHALL RECEIVE THE CONSHIELD ADDITIVE, OR APPROVED EQUAL.
3. BENCH SHALL BE FORMED TO ACCOMMODATE CCTV EQUIPMENT.

NOT TO SCALE

HRSD	STANDARD DESIGN DETAIL	DRAWING NO. 204
		SHEET 1 OF 1
	MANHOLE INVERT SHAPING	DATE 1/2021

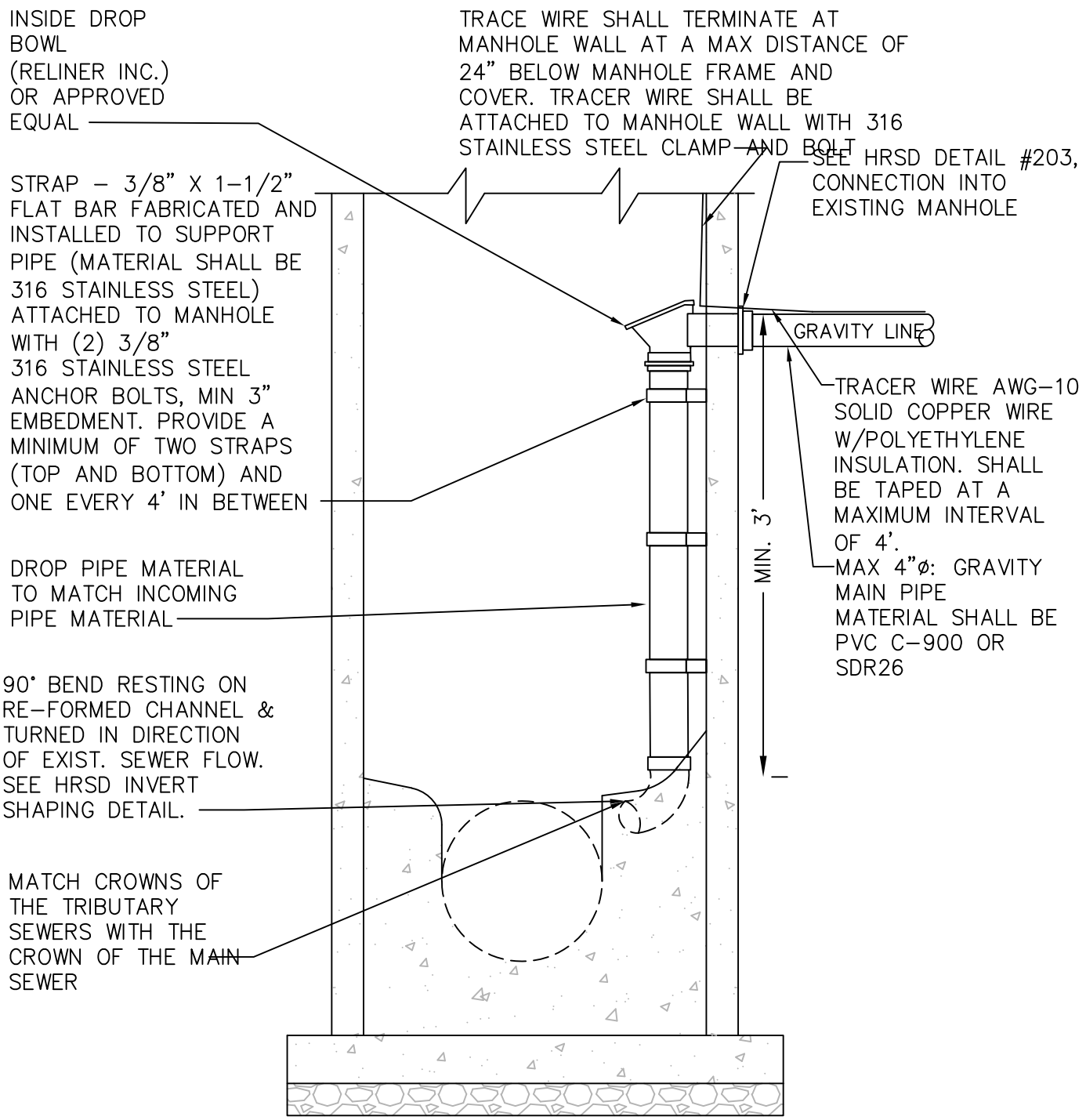

NOTES:

1) THIS CONNECTION WILL ONLY BE CONSIDERED FOR MANHOLES GREATER THAN 6' IN DEPTH FROM RIM TO INVERT AND WILL ONLY BE APPROVED ON A CASE BY CASE BASIS BY HRSD OPERATIONS.

2) NO LATERAL ENTRY SHALL BE ALLOWED WITHIN THE TAPER UNIT OF THE MANHOLE.

3) IF LATERAL CONNECTION IS GREATER THAN 6' IN DEPTH FROM GRADE. MARKING TAPE SHALL BE INSTALLED 3' BELOW GRADE.

NOT TO SCALE

HRSD	STANDARD PRECAST CONCRETE OR BRICK MANHOLE	DRAWING NO. 205
		SHEET 1 OF 1
	INSIDE GRAVITY DROP CONNECTION TO EXISTING MANHOLE	DATE 1/2021

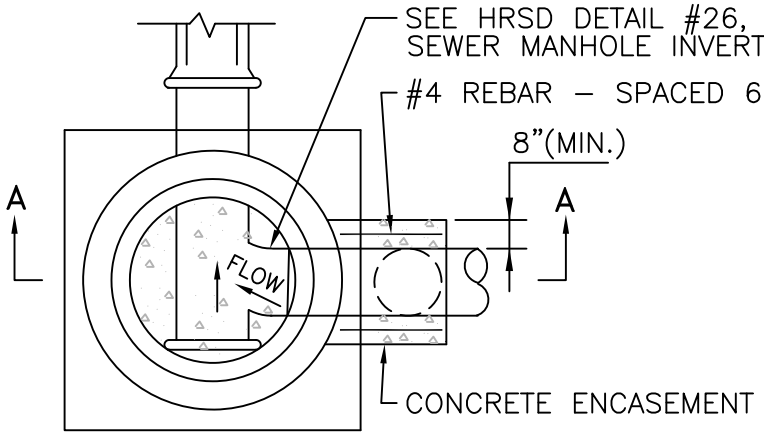

PLAN

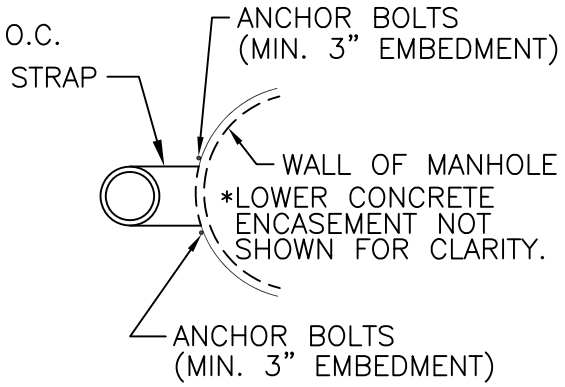

SECTION B–B

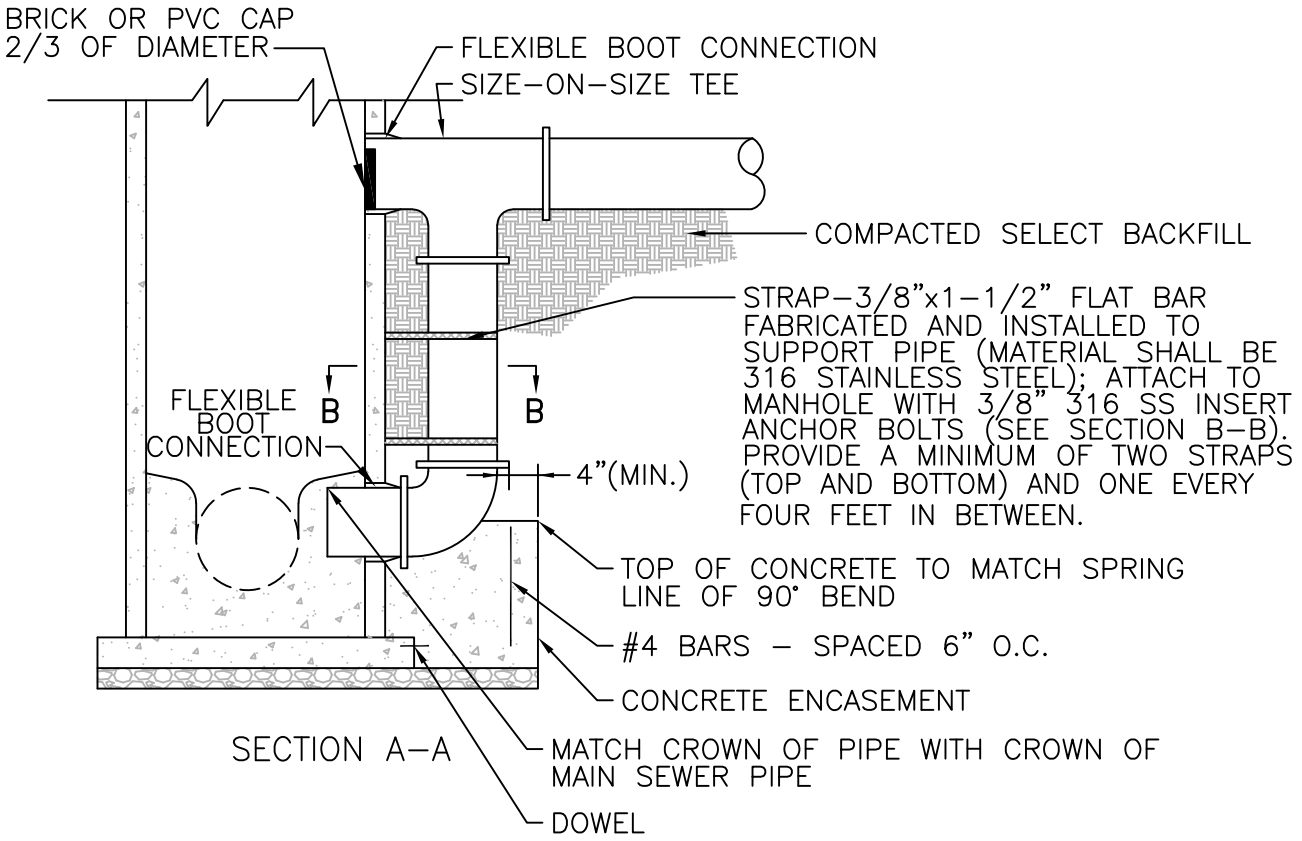

SECTION A–A

NOT TO SCALE

HRSD	STANDARD PRECAST CONCRETE	DRAWING NO. 206
		SHEET 1 OF 1
	OUTSIDE DROP MANHOLE	DATE 1/2021

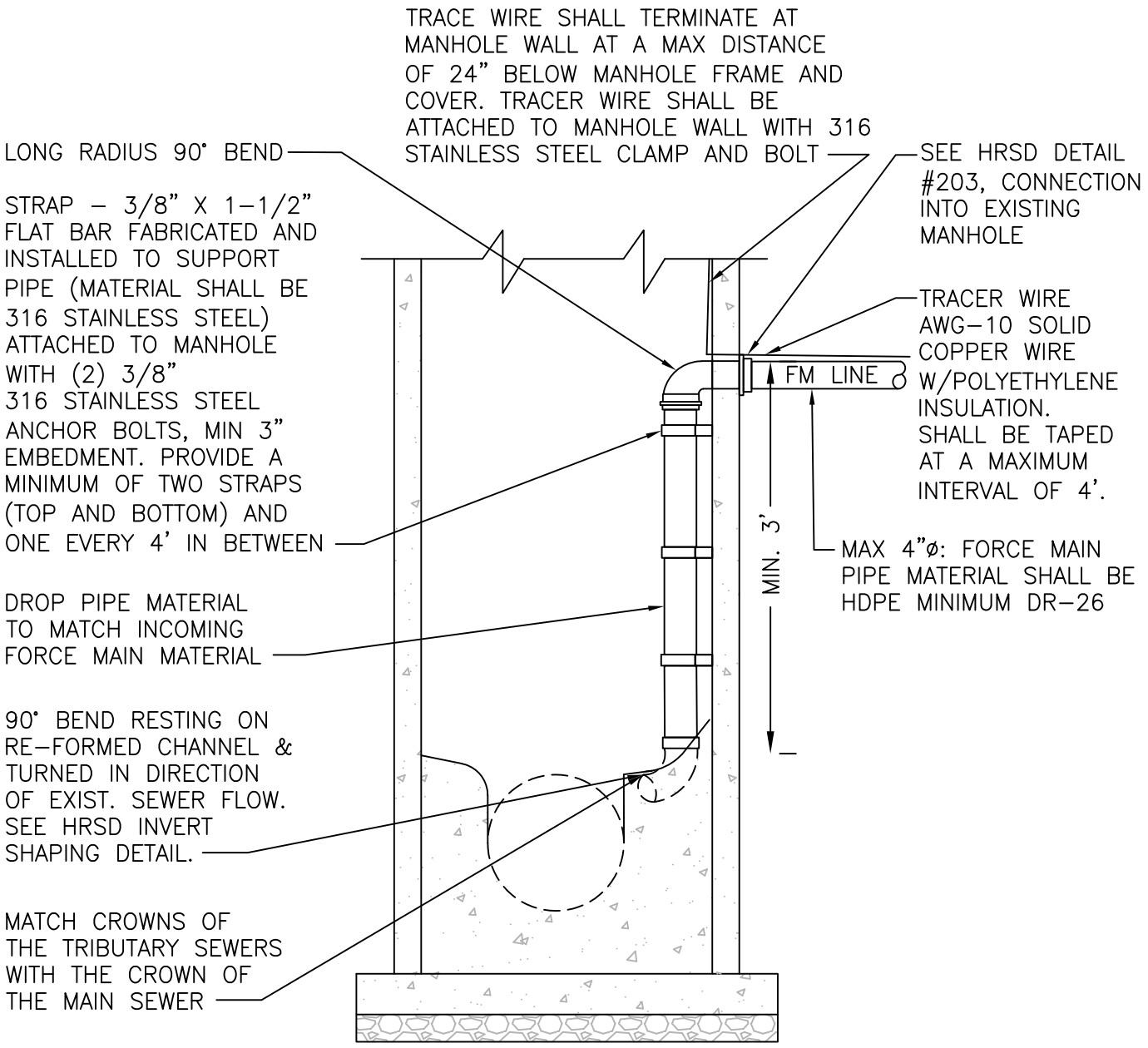

NOTES:

1) THIS CONNECTION WILL ONLY BE CONSIDERED FOR MANHOLES GREATER THAN 6' IN DEPTH FROM RIM TO INVERT AND WILL ONLY BE APPROVED ON A CASE BY CASE BASIS BY HRSD OPERATIONS.

2) NO FORCE MAIN ENTRY SHALL BE ALLOWED WITHIN THE TAPER UNIT OF THE MANHOLE.

3) REFERENCE HRPDC SAXOPHONE CONNECTION DETAIL

4) ALL BURIED PIPING SHALL BE HDPE DR-17, IF FUSION IS REQUIRED IT SHALL BE BUTT FUSION WELDED

5) IF LATERAL CONNECTION IS GREATER THAN 6' IN DEPTH FROM GRADE. MARKING TAPE SHALL BE INSTALLED 3' BELOW GRADE.

NOT TO SCALE

HRSD	STANDARD PRECAST CONCRETE OR BRICK MANHOLE	DRAWING NO. 207
	INSIDE FORCE MAIN DROP CONNECTIONS TO EXISTING MANHOLE	SHEET 1 OF 1
		DATE 1/2021

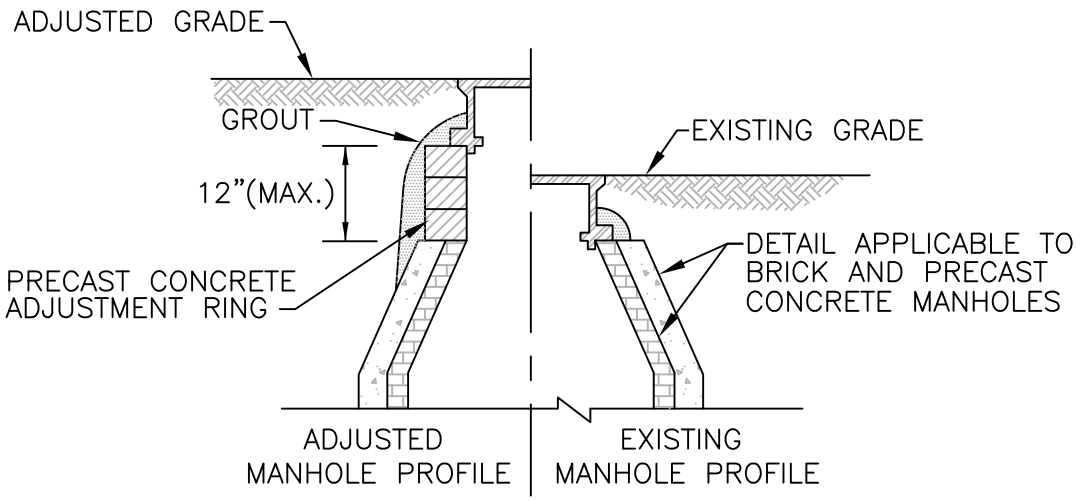

NOTES:

1. PRECAST CONCRETE ADJUSTMENT RINGS SHALL BE USED TO RAISE THE MANHOLE FRAME FROM THE CONE SECTION. JACK UP RINGS BETWEEN THE FRAME AND COVER ARE NOT ACCEPTABLE.

2. GROUT MIX SHALL BE 1:3 CEMENT:SAND MORTAR. CAP EXTERIOR WITH GROUT OVER FRAME FLANGE, ADJUSTMENT RING(S), AND THE TOP 18" OF THE CONE SECTION. COAT INSIDE SURFACE OF THE ADJUSTMENT RINGS AND SEAL SMOOTH WITH 3/8" THICK GROUT.

3. IN LIEU OF PRECAST CONCRETE, ADJUSTMENT RINGS MAY BE COURSES OF HARD, SOUND, COMMON BRICK LAID RADIALLY AND FULLY SUPPORTING THE FRAME FLANGE. BRICK SHALL BE LAID WITH 1:3 CEMENT:SAND MORTAR WITH SHAVED JOINTS NOT TO EXCEED 3/8" THICKNESS. CAP WITH GROUT OVER FRAME FLANGE, ADJUSTMENT RING(S), AND THE TOP 18" OF THE CONE SECTION (AS SHOWN ABOVE).

4. TOTAL HEIGHT BETWEEN THE TOP OF THE CONE AND THE BOTTOM OF THE FRAME FLANGE SHALL NOT EXCEED 12" (OR 3 OF COURSES OF BRICK) AFTER THE ADJUSTMENT. IF, ON A PRECAST MANHOLE, THE TOTAL HEIGHT IS >12" BEFORE THE ADJUSTMENT, OR IF RAISING THE TOTAL HEIGHT TO 12" PROVIDES INSUFFICIENT ADJUSTMENT, INSERT AN ADDITIONAL PRECAST CONCRETE STANDARD MANHOLE SECTION BETWEEN THE CONE SECTION AND THE UPPER MOST BARREL SECTION. THE NEW SECTION SHALL HAVE RECEIVED THE CONSHIELD ADDITIVE DURING CASTING. IF, ON A BRICK MANHOLE, THE TOTAL HEIGHT IS >12" BEFORE THE ADJUSTMENT, OR IF RAISING THE TOTAL HEIGHT TO 12" PROVIDES INSUFFICIENT ADJUSTMENT, CONTACT THE HRSD ENGINEER FOR DIRECTION.

5. THE EXISTING BARREL SECTION(S), FOUNDATION, FOOT PAD, AND MANHOLE PIPES SHALL NOT BE DISTURBED.

6. MANHOLES TO BE LOWERED MAY BE LOWERED BY REMOVING EXISTING ADJUSTMENT RINGS. IF ADJUSTMENT RINGS ARE NOT PRESENT BETWEEN THE FRAME AND THE CONE SECTION, OR IF THEIR REMOVAL PROVIDES INSUFFICIENT ADJUSTMENT, CONTACT THE HRSD ENGINEER.

NOT TO SCALE

HRSD	STANDARD PRECAST CONCRETE	DRAWING NO. 208
		SHEET 1 OF 1
	SANITARY SEWER MANHOLE ADJUSTMENT	DATE 1/2021

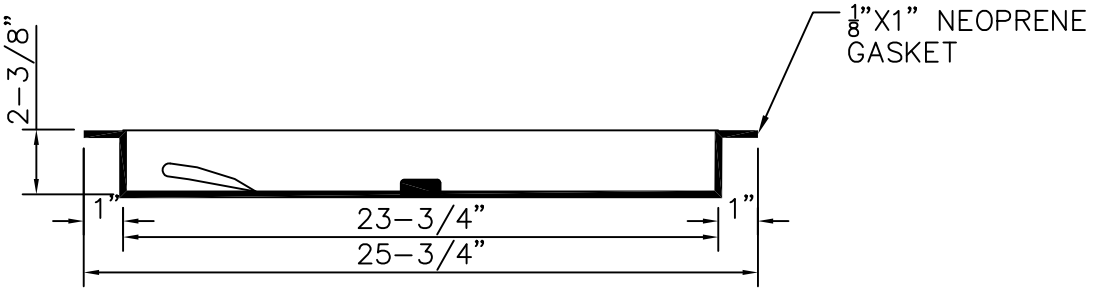

SECTION A-A

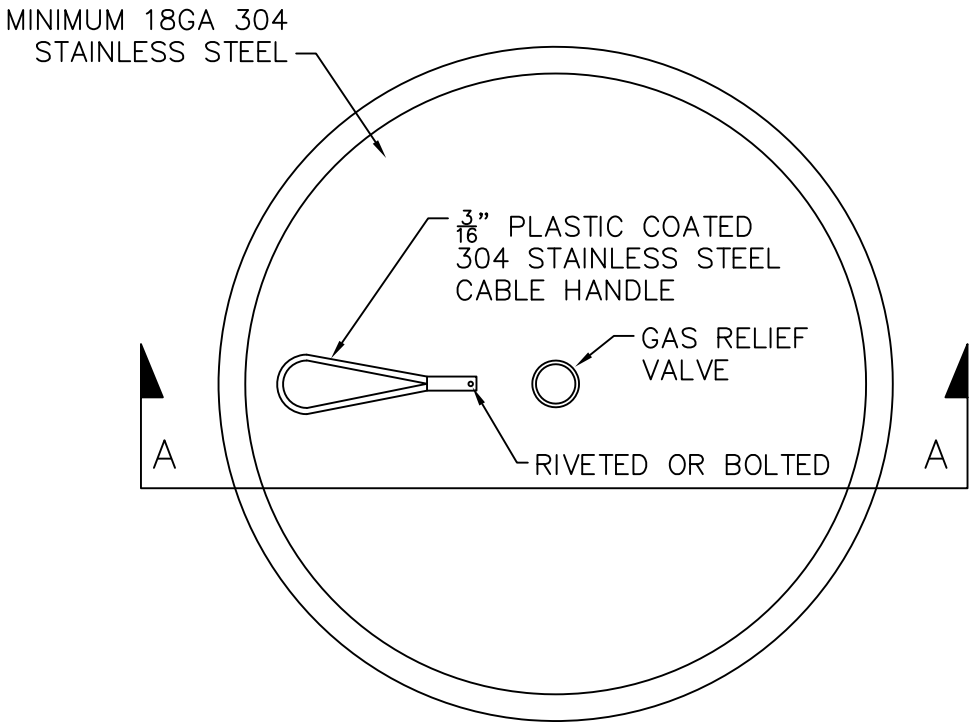

NOTES:

1. ACTUAL DIMENSIONS MUST BE COMPATIBLE WITH MANHOLE CASTING DIMENSIONS.
2. DUST COVER NOT REQUIRED WHEN USING MANHOLE INSERT.
3. GAS RELIEF VALVE SHALL BE CAPABLE OF RELEASING GAS AT A PRESSURE OF 0.5 TO 1.5 PSI AND HAVE A WATER LEAK DOWN RATE NO GREATER THAN 5 GALLONS/24 HOURS.
4. LOAD TEST STRENGTH MUST EXCEED 3,000 POUNDS.
5. HANDLE MUST BE CAPABLE OF WITHSTANDING A MINIMUM 500 POUND PULL FORCE.

NOT TO SCALE

HRSD	STANDARD DESIGN DETAIL	DRAWING NO. 209
		SHEET 1 OF 1
	MANHOLE INSERT	DATE 1/2021

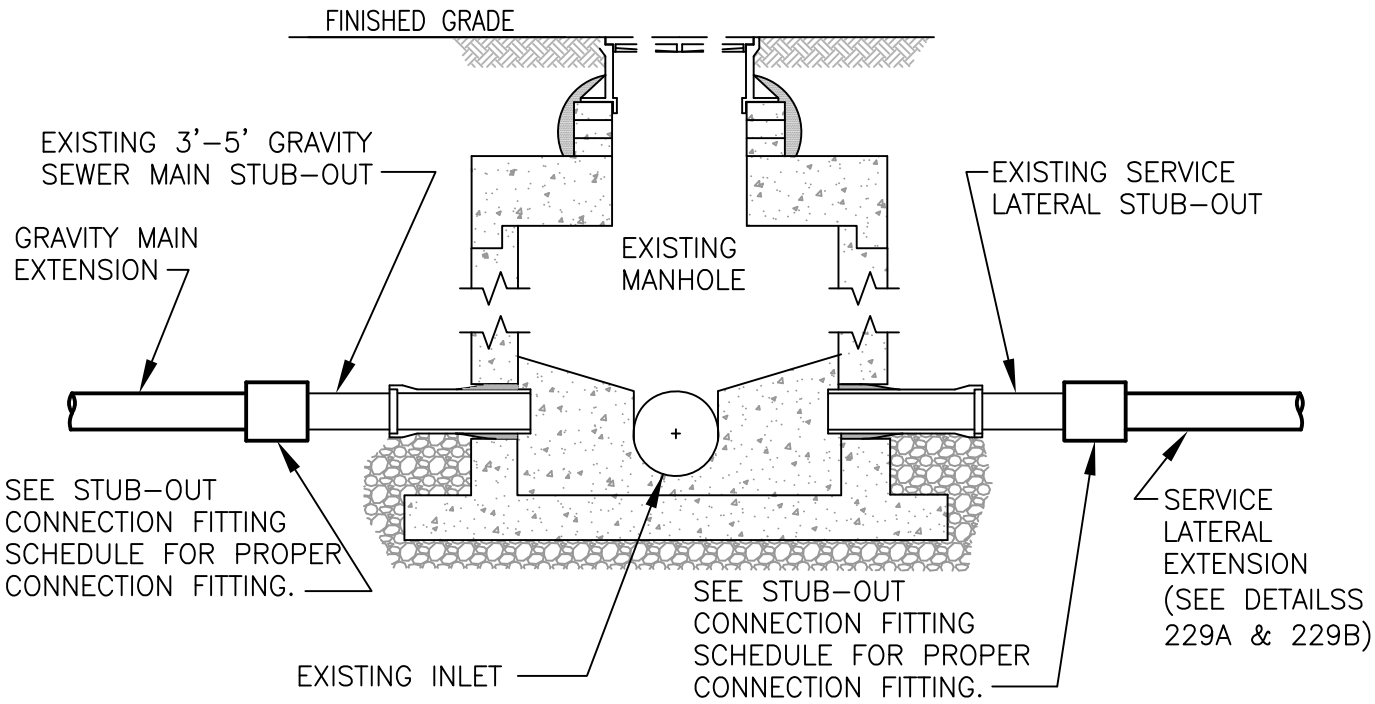

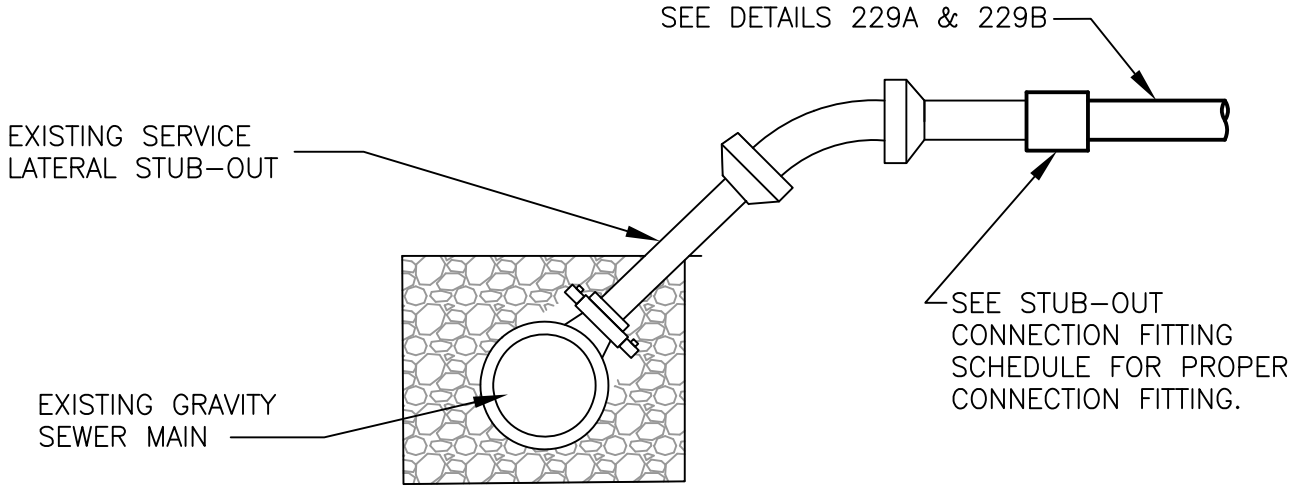

CROSS SECTION

STUB–OUT CONNECTION FITTING SCHEDULE	
STUB–OUT MATERIAL	FITTING
PVC	PVC COUPLING
DI/CI	JCM 201
VITRIFIED CLAY	FERNCO 102 SERIES

NOTE:

1. CONTRACTOR SHALL FIELD VERIFY ALL PIPE MATERIAL AND SIZES PRIOR TO PROCURING MATERIAL

NOT TO SCALE

HRSD

STANDARD DESIGN DETAIL

SERVICE LATERAL & GRAVITY MAIN CONNECTION TO EXISTING STUB–OUT

DRAWING NO. 226

SHEET 1 OF 1

DATE 1/2021

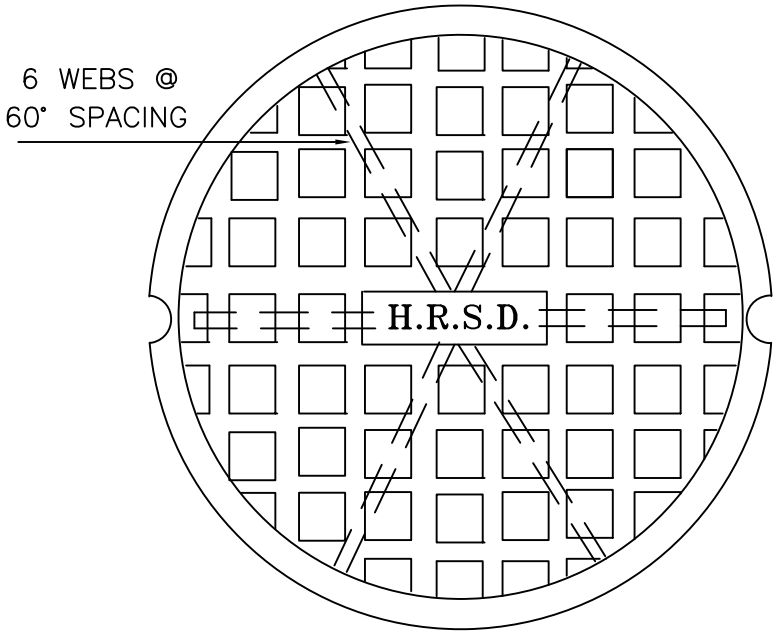

NOTES:

1. CASTINGS TO BE SHOT BLASTED
2. CASTING TO BE ASTM A-48 CLASS 30
3. TOLERANCE ±.125"
4. MACHINE SEATING SURFACE ON BOTH FRAME & COVER
5. 0.375" MIN. THICKNESS OF DUST COVER
6. MINIMUM WEIGHTS:
   COVER-165 LBS.
   FRAME-303 LBS.
7. SEE MASTER SPEC SECTION 01340 FOR AMERICAN IRON AND STEEL REQUIREMENT.

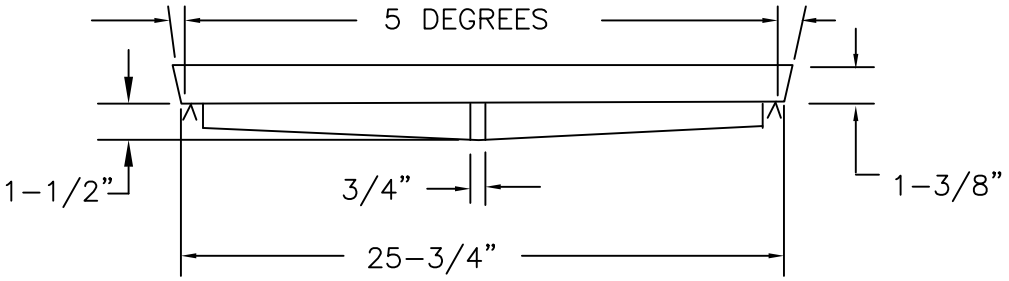

COVER

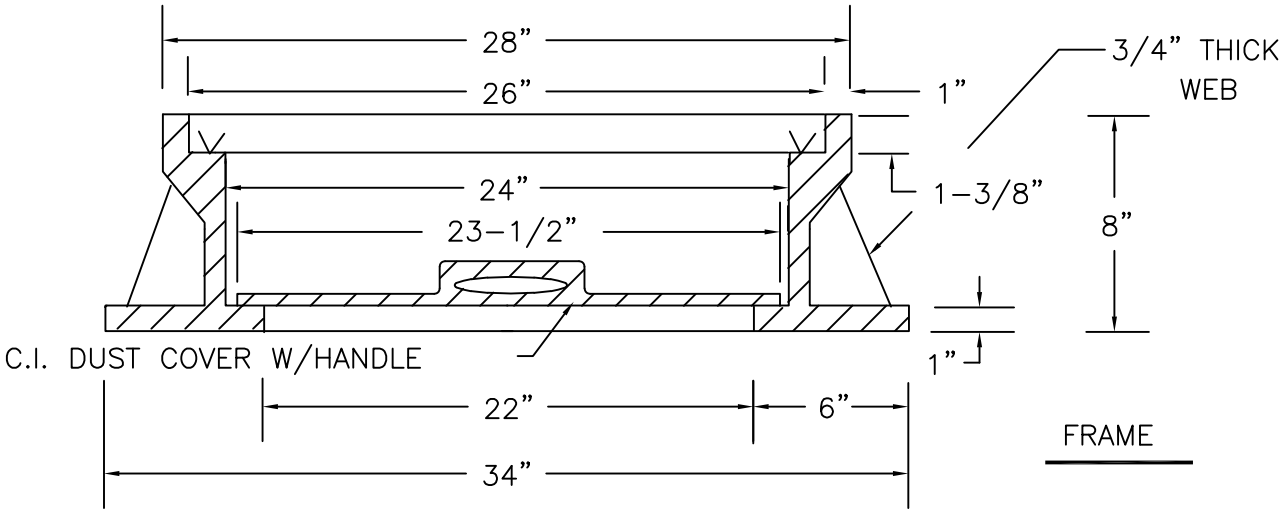

FRAME

* USE WHERE 24" WATERTIGHT M.H. MAY NOT BE APPLICABLE.

NOT TO SCALE

HRSD	STANDARD DESIGN DETAIL	DRAWING NO. 227
		SHEET 1 OF 1
	STANDARD MANHOLE FRAME AND COVER	DATE 1/2021

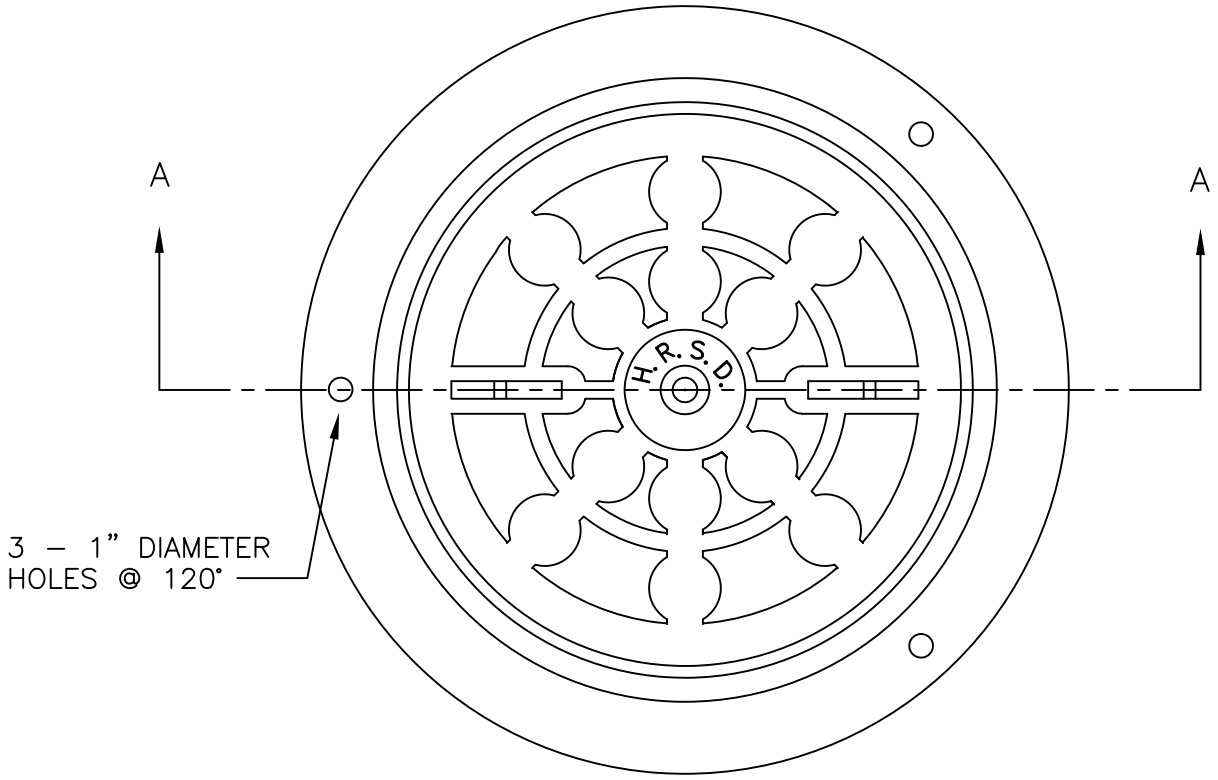

PLAN

NOTES

1. CASTINGS TO BE SHOT BLASTED.
2. CASTINGS SHALL MEET OR EXCEED ASTM A–48–76 CLASS 30–B.
3. TOLERANCE ±0.125".
4. MACHINE SEATING SURFACE ON BOTH FRAME & COVER.
5. FRAME & COVER TO BE DEWEY BROS. INC. MH–RCR–3000W (WATERTIGHT) OR EQUAL.
6. MINIMUM WEIGHTS:
   COVER–170 LBS.
   FRAME–262 LBS.
7. SEE MASTER SPEC SECTION 01340 FOR AMERICAN IRON AND STEEL REQUIREMENT.

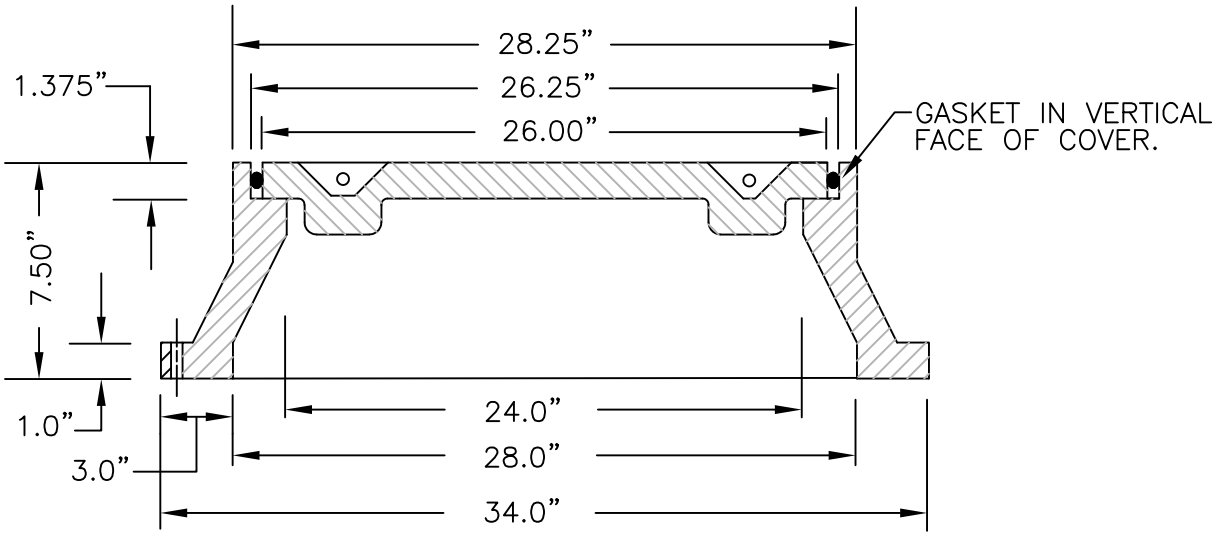

SECTION A–A

NOT TO SCALE

HRSD	STANDARD DESIGN DETAIL	DRAWING NO. 228
		SHEET 1 OF 1
	MANHOLE FRAME AND COVER–WATERTIGHT	DATE 1/2021

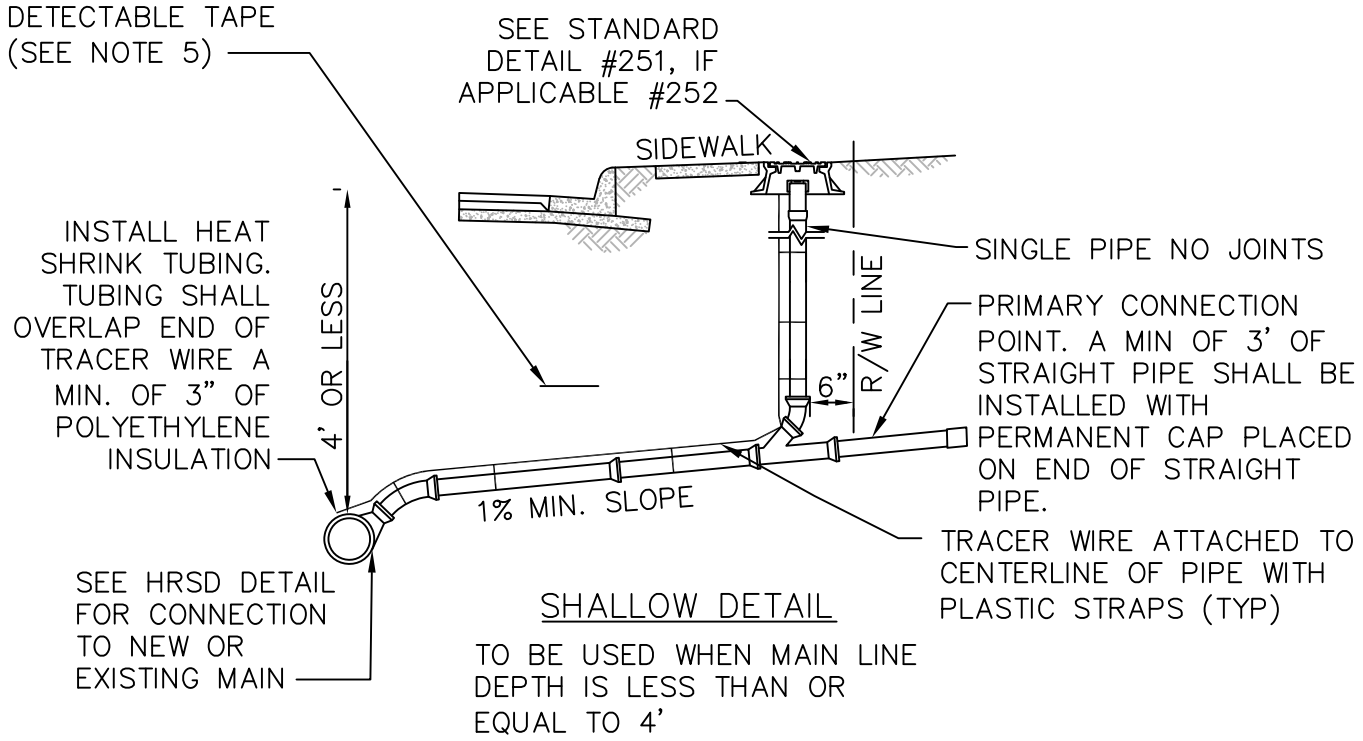

SHALLOW DETAIL

TO BE USED WHEN MAIN LINE DEPTH IS LESS THAN OR EQUAL TO 4'

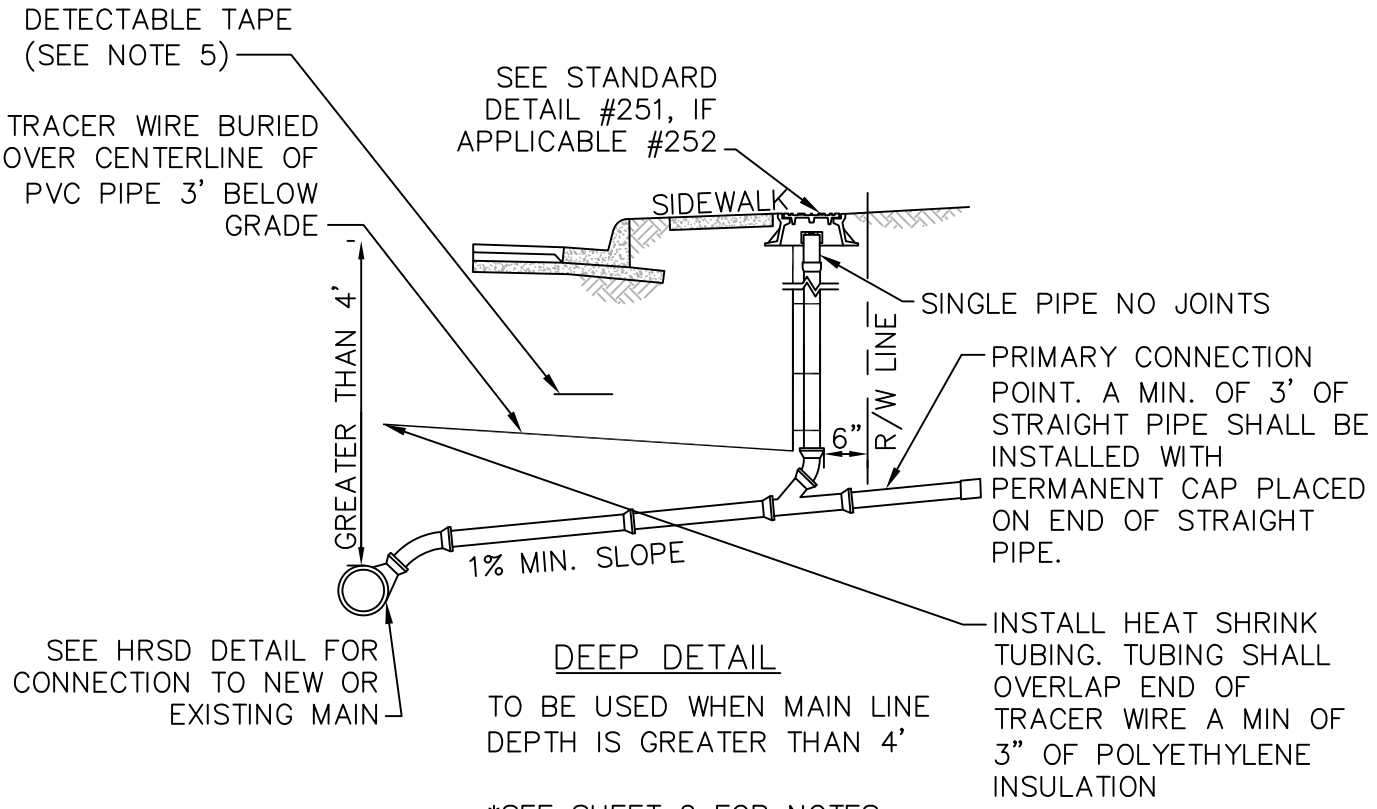

DEEP DETAIL

TO BE USED WHEN MAIN LINE DEPTH IS GREATER THAN 4'

*SEE SHEET 2 FOR NOTES

NOT TO SCALE

HRSD	STANDARD DESIGN DETAIL	DRAWING NO. 229A
		SHEET 1 OF 2
	SANITARY SERVICE LATERAL INSTALLATION	DATE 1/2021

NOTES:

1. TYPICAL LATERAL LAYOUT:
   1.1. SHALL ONLY UTILIZE THE PRIMARY CONNECTION POINT WHEN TYING TO AN EXISTING LATERAL.
   1.2. THE CONNECTION POINT TO THE PRIVATE LATERAL AND TO THE SANITARY SERVICE LATERAL CLEANOUT SHALL BE MADE WITH SOLID SLEEVES.
   1.3. FERNCO COUPLINGS OR EQUIVALENTS ARE NOT PERMITTED ON THE LATERAL CONNECTION OR AT THE CONNECTION POINT TO THE PRIVATE LATERAL, UNLESS THE PRIVATE LATERAL IS VCP (VITRIFIED CLAY PIPE). CONNECTIONS WILL NOT BE ALLOWED IF THE PRIVATE LATERAL PIPE MATERIAL IS ORANGEBURG PIPE (BITUMINIZED FIBER SEWER PIPE).
   1.4. RC STRONG BACK FERNCO COUPLINGS SHALL BE ENCASED IN CONCRETE AND SHALL ONLY BE ALLOWED ON VITRIFIED CLAY PIPE (VCP). CONCRETE SHALL BE DIRT FORMED IN A 6" BOX TO ENCOMPASS THE ENTIRE FITTING.
   1.5. CLEANOUT RISER ASSEMBLY AND FITTING SHALL BE SAME MATERIAL AS THE SEWER LATERAL

2. CLEANOUT RISER ASSEMBLY, LATERAL CLEANOUT AND TRACER WIRE SHALL BE INSTALLED PRIOR TO FINAL INSPECTION/ACCEPTANCE. LOCATION OF WYE AND CLEANOUT MAY BE VARIED BY HRSD STAFF IF NECESSARY DUE TO UNUSUAL DEPTH OR CONDITIONS. MINIMUM COVER OF 3.0 FEET REQUIRED FOR SERVICE.

3. LATERAL MATERIAL SHALL BE POLYVINYLCHLORIDE (P.V.C.). ASTM D-3034 SDR 26, AWWA C900-CLASS 150 (DR-18) OR ASTM D-1785 SCHEDULE 40. FOR DEPTHS LESS THAN 2' OR GREATER THAN 10' CONTACT HRSD FOR PIPE MATERIAL.

4. TRACER WIRE SHALL BE AWG 10 SOLID COPPER WIRE WITH POLYETHYLENE INSULATION. THE TRACER WIRE SHALL BE ATTACHED TO THE LATERAL PIPE WHEN THE DEPTH IN NO GREATER THAN 4.0 FEET. THE WIRE SHALL BE BURIED OVER THE CENTERLINE OF THE LATERAL PIPE AT 3.0 FEET BELOW GRADE WHEN THE LATERAL DEPTH IS GREATER THAN 4.0 FEET.

5. INSTALL DETECTABLE WARNING TAPE CONTINUOUSLY FROM THE MAIN TO THE HRSD CLEANOUT 1' ABOVE TOP OF TRACER WIRE. TAPE SHALL BE GREEN IN COLOR AND STATE " CAUTION BURIED SEWER LINE BELOW"

6. CONTRACTOR SHALL UTILIZE NO MORE THAN FOUR (4) FITTINGS FROM THE HRSD CONNECTION POINT TO THE HRSD CLEANOUT.

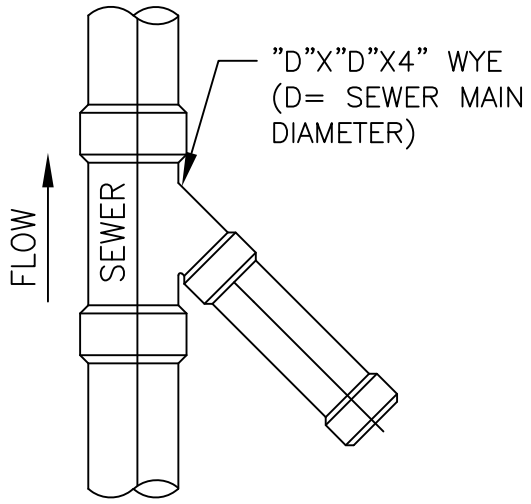

PLAN

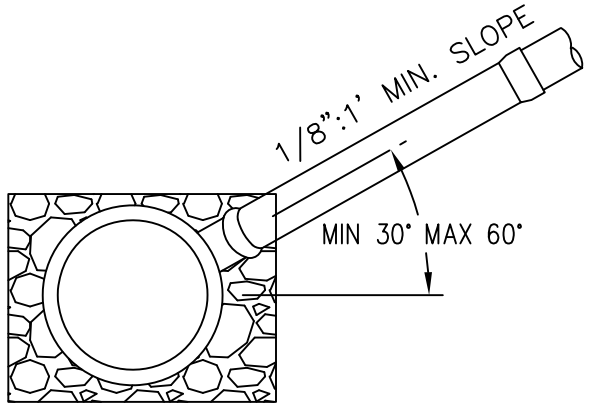

SECTION VIEW

NOTES:

1. PROVIDE A CAPPED EXTENSION TO PROPERTY LINE PER HRSD REQUIREMENTS IF SEWER SERVICE WILL NOT BE ACTIVATED AT THE TIME OF CONSTRUCTION.
2. CLEAN OUT SHALL BE INSTALLED AT THE ROW OR HRSD EASEMENT/PROPERTY LINE, UNLESS OTHERWISE STATED.
3. CONTRACTOR SHALL USE NO MORE THAN FOUR (4) FITTINGS. BENDS SHALL HAVE A MAX ANGEL OF 60° AND A MINIMUM OF 30° ALL BENDS SHALL BE LONG RADIUS.
4. WYE CONNECTION SHALL BE PLACED BETWEEN THE 1:30–3 O'CLOCK OR 9 TO 10:30 O'CLOCK POSITION ON THE GRAVITY MAIN.
5. THIS DETAIL SHALL BE USED IN CONJUCTION WITH STANDARD DETAILS 229A & 229B AND DETAILS 251 & 252.
6. PIPING BEDDING SHALL BE TYPE IV BEDDING REFERANCE HRPDC DETAIL EW_01.

NOT TO SCALE

HRSD	STANDARD DESIGN DETAIL	DRAWING NO. 230
	SANITARY SEWER SERVICE CONNECTION FOR NEW OR EXISTING GRAVITY MAINS	SHEET 1 OF 1
		DATE 1/2021

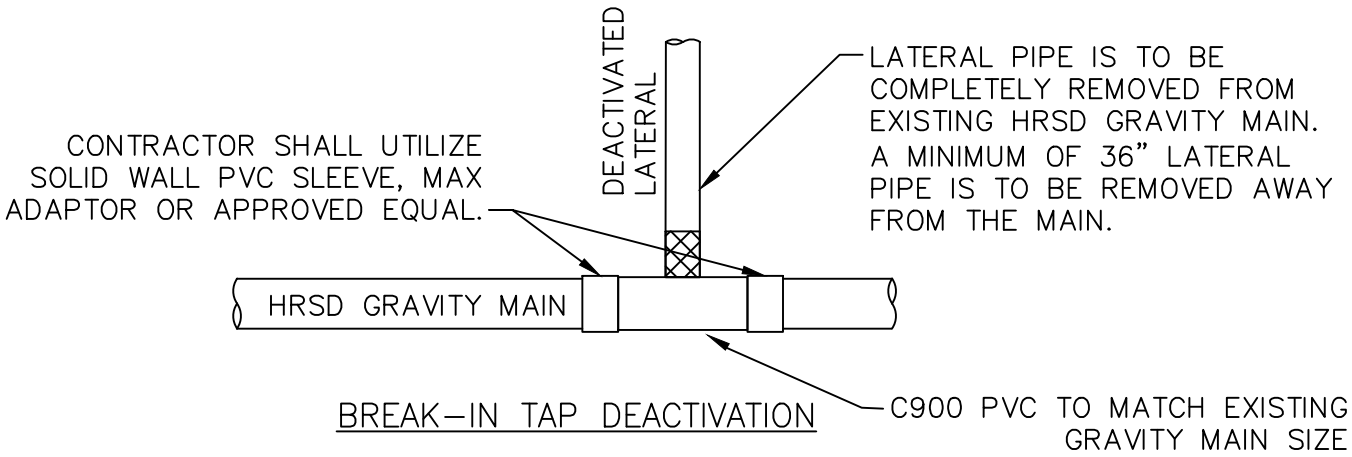

BREAK–IN TAP DEACTIVATION

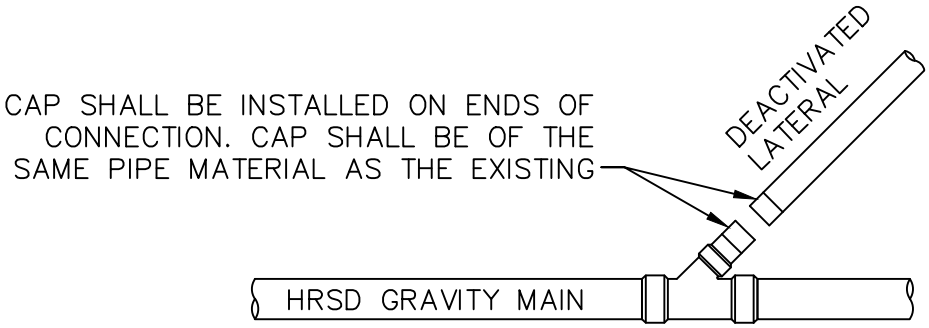

WYE OR TEE DEACTIVATION

NOTES:

1. DEACTIVATED LATERAL SHALL BE REMOVED TO THE GRAVITY MAIN AND CAPPED ON BOTH ENDS.

NOT TO SCALE

HRSD	STANDARD DESIGN DETAIL	DRAWING NO. 231
		SHEET 1 OF 1
	SANITARY SERVICE LATERAL DEACTIVATION	DATE 1/2021

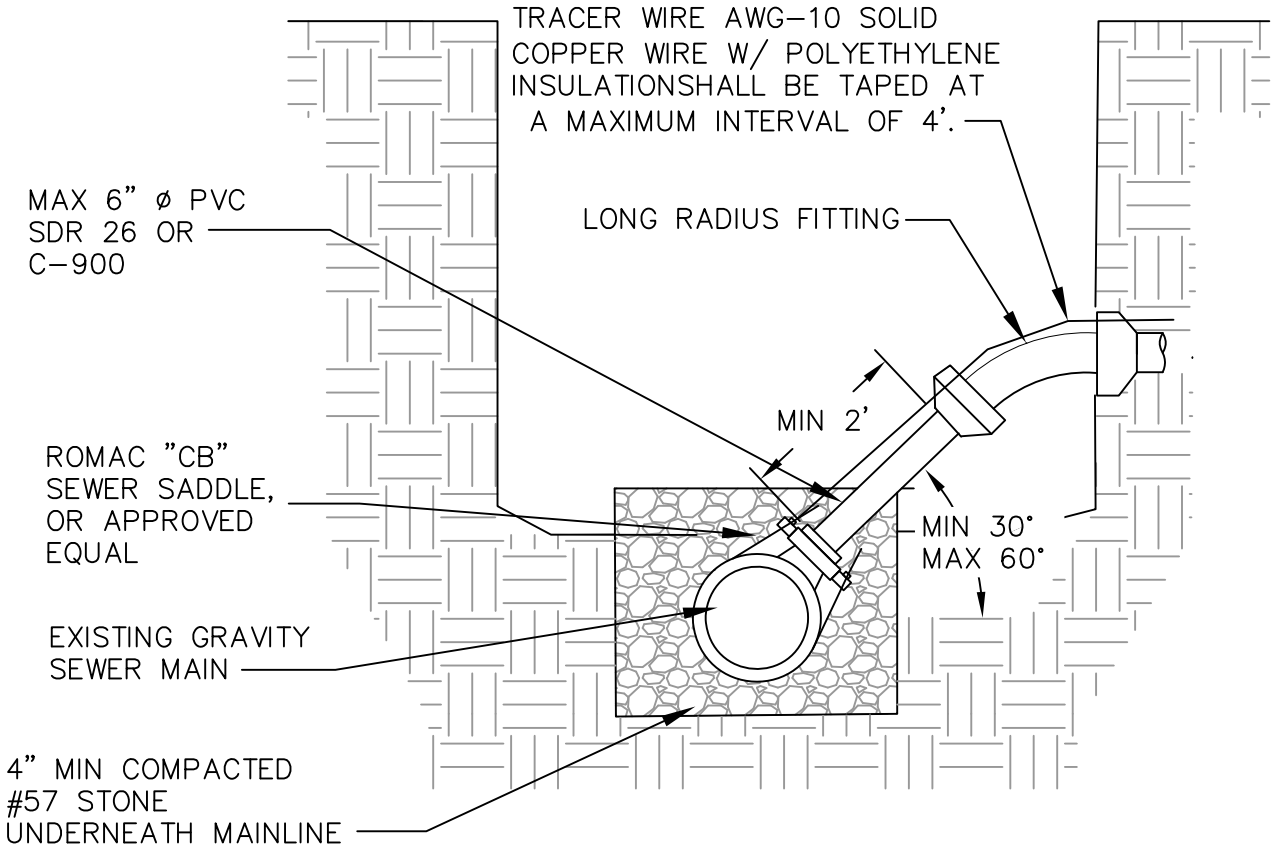

NOTES:

1. MIN OF 2' OF STRAIGHT PIPE FROM CONNECTION IS REQUIRED BEFORE INSTALLING ANY FITTING.
2. 4" SADDLE SHALL BE COMPLETELY ENCOMPASSED WITH COMPACTED #57 STONE.
3. TERMINATION OF TRACER WIRE SHALL BE AT THE BOLTS OF ROMAC FITTING. EXPOSED BARE COPPER SHALL BE WRAPPED AROUND THE BOLTS.
4. THIS DETAIL SHALL BE USED ON A CASE BY CASE BASIS, AND CONTINGENT UPON HRSD APPROVAL.

NOT TO SCALE

HRSD	STANDARD DESIGN DETAIL	DRAWING NO. 232
		SHEET 1 OF 1
	ALTERNATIVE SERVICE LATERAL CONNECTION TO EXISTING GRAVITY SEWER MAIN	DATE 1/2021

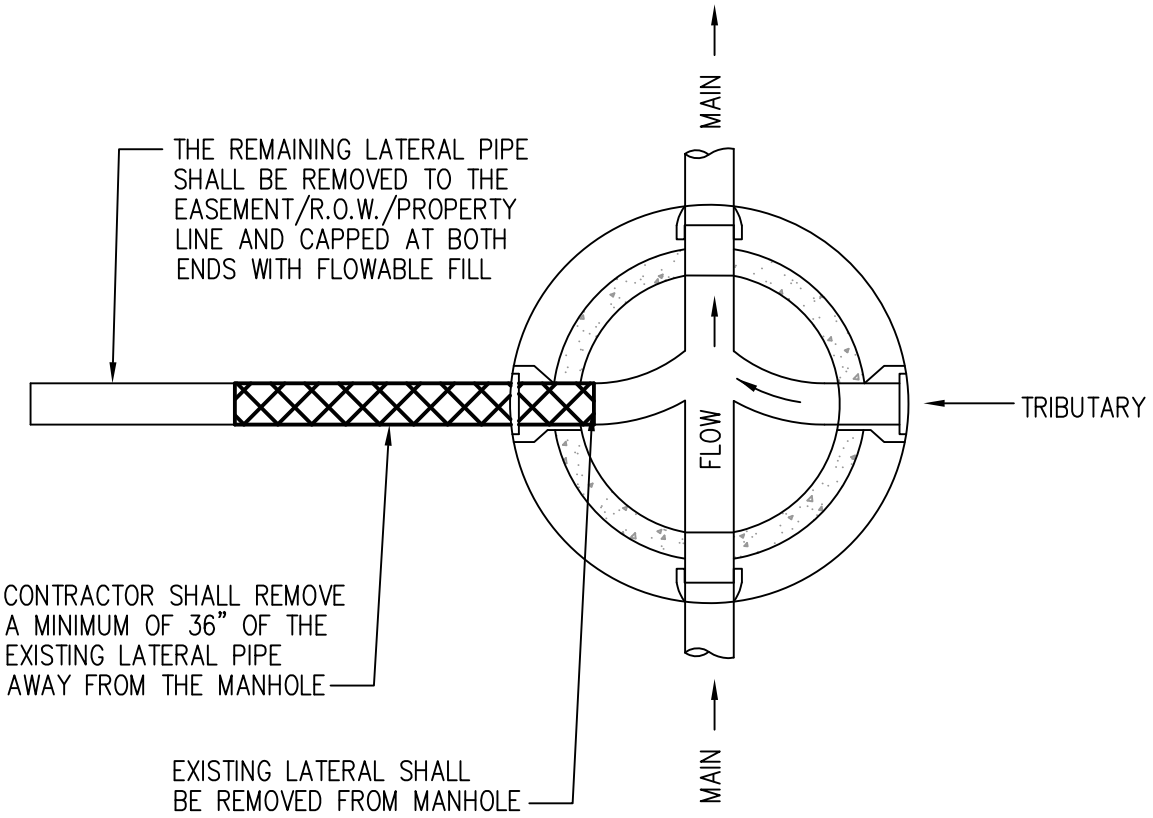

NOTES:

1. VOID (CREATED FROM THE REMOVED LATERAL) SHALL BE FILLED WITH CONCRETE THAT HAS CONSHIELD ADDITIVE.

2. THE EXTERIOR SURFACE SHALL BE PARGED WITH NON-SHRINK HIGH STRENGTH GROUT.

NOT TO SCALE

HRSD	STANDARD DESIGN DETAIL	DRAWING NO. 233
		SHEET 1 OF 1
	PERMANENT SERVICE LATERAL DEACTIVATION AT HRSD MANHOLE	DATE 1/2021

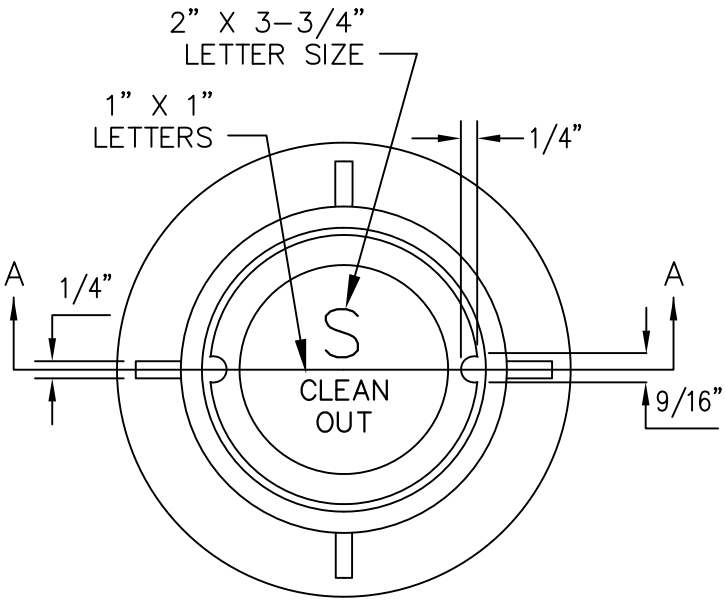

PLAN

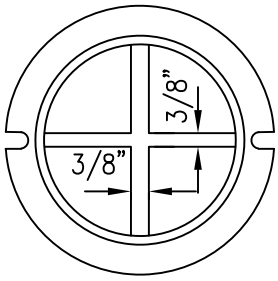

BOTTOM

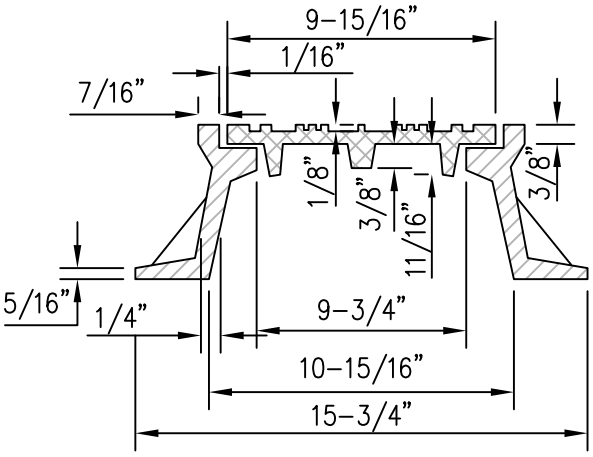

SECTION A-A

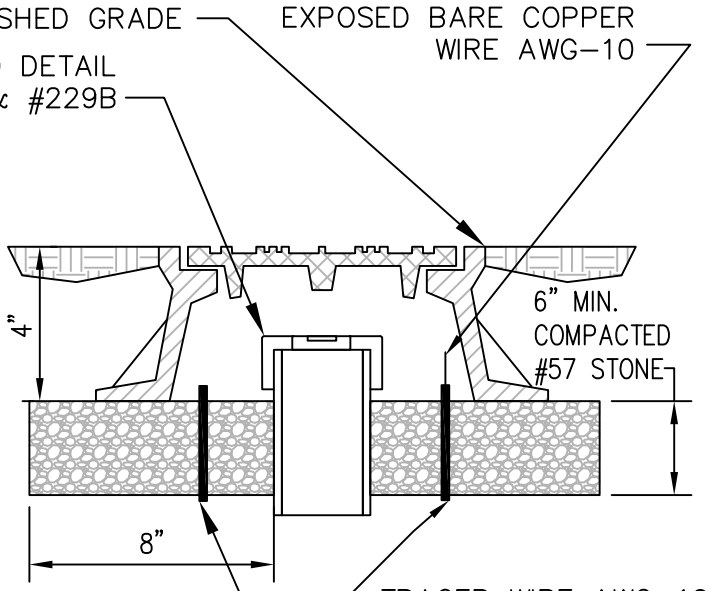

NOTES:

1. CLEAN OUT FRAME & COVER TO BE PART NUMBER NPN-CW-18 SUPPLIED BY CAPITAL FOUNDRY OF VIRGINIA, INC. OR APPROVED EQUAL.
2. ALL GRAY IRON CASTINGS SHALL CONFORM TO LATEST EDITION OF ASTM A-48, CLASS 30
3. AND SHALL BE OF UNIFORM QUALITY.
4. ALL CASTING DIMENSIONS SHALL HAVE A TOLERANCE OF 1/8"±
5. ALL CASTINGS SHALL BE CLEANED BY SHOT BLASTING AND HAND CHIPPING UTILIZING STANDARD
6. INDUSTRY PRACTICES PRIOR TO SHOP APPLICATION OF ASPHALTIC COATING, BY DIPPING.
7. THE TRACER WIRE POLYETHYLENE INSULATION SHALL ONLY FROM THE LAST INCH. TRACER WIRE SHALL HAVE A SURPLUS OF 2' OF WIRE CONNECTED INSIDE OF CASTING.
8. SEE MASTER SPEC SECTION 01340 FOR AMERICAN IRON AND STEEL REQUIREMENT.

NOT TO SCALE

HRSD	STANDARD DESIGN DETAIL	DRAWING NO. 251
	SANITARY SEWER SERVICE CLEAN OUT FRAME AND COVER (NON-TRAFFIC RATED)	SHEET 1 OF 1
		DATE 1/2021

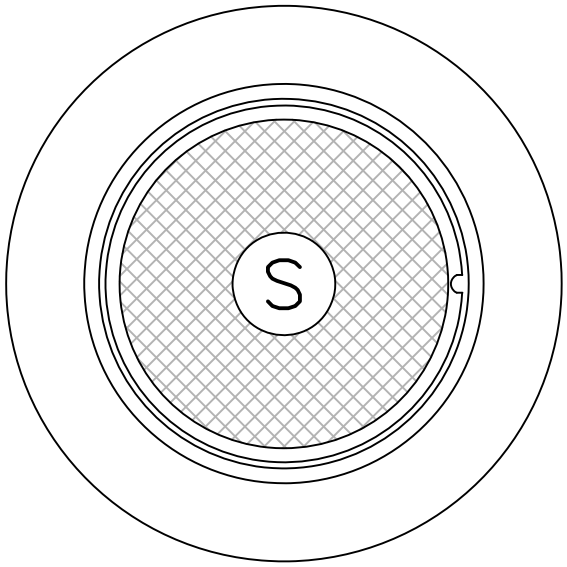

PLAN

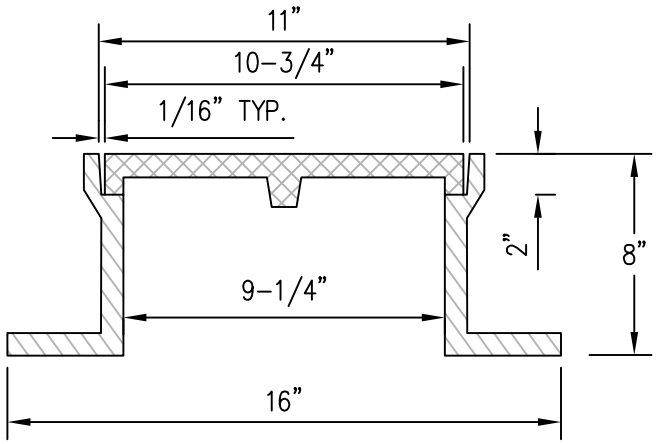

SECTION A-A

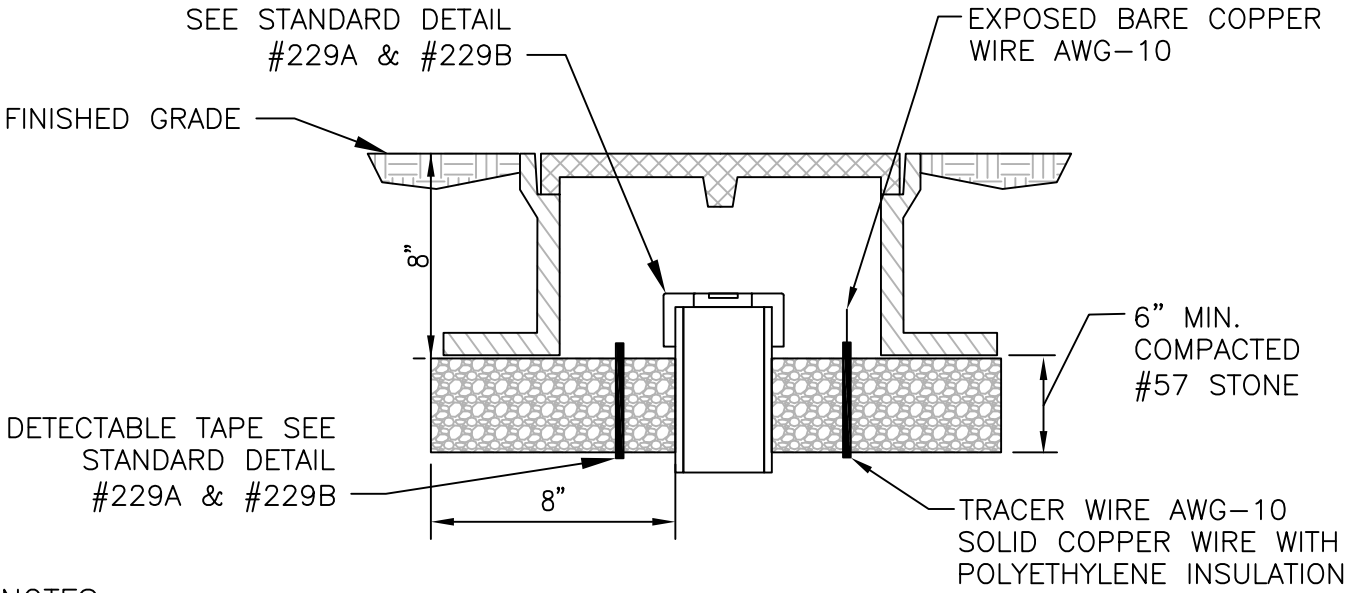

NOTES:

1. CLEAN OUT FRAME & COVER HIGHWAY LOAD RATED FOR USE IN DRIVEWAYS, PARKING LOTS, ETC.
2. CLEAN OUT FRAME & COVER TO BE PART NUMBER VB-9*S SUPPLIED BY CAPITAL FOUNDRY OF VIRGINIA, INC. OR APPROVED EQUAL.
3. ALL GRAY IRON CASTINGS SHALL CONFORM TO LATEST EDITION OF ASTM A-48, CLASS 30 AND SHALL BE OF UNIFORM QUALITY.
4. ALL CASTING DIMENSIONS SHALL HAVE A TOLERANCE OF 1/8"±
5. ALL CASTINGS SHALL BE CLEANED BY SHOT BLASTING AND HAND CHIPPING UTILIZING STANDARD INDUSTRY PRACTICES PRIOR TO SHOP APPLICATION OF ASPHALTIC COATING, BY DIPPING.
6. SEE MASTER SPEC SECTION 01340 FOR AMERICAN IRON AND STEEL REQUIREMENT.

NOT TO SCALE

HRSD	STANDARD DESIGN DETAIL	DRAWING NO. 252
	SANITARY SEWER SERVICE CLEAN OUT FRAME AND COVER (TRAFFIC RATED)	SHEET 1 OF 1
		DATE 1/2021

NOTE: HANDLE AS SHOWN IS VALVE INSTALLED IN OPEN POSITION

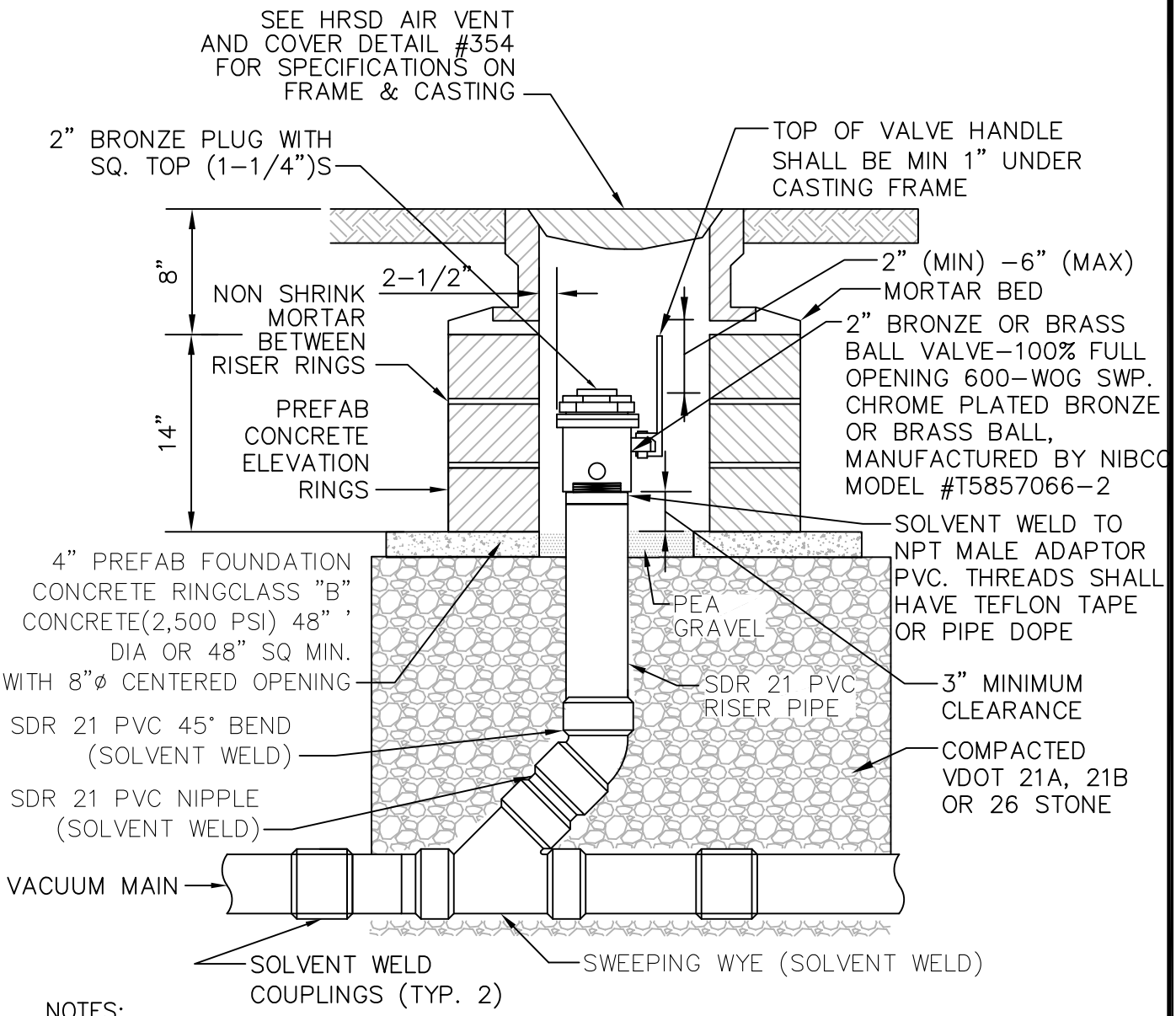

NOTES:

1. CONSTRUCT AIR INTAKE VALVE WITH CONCRETE ELEVATION RINGS AS MANUFACTURED BY NANSEMOND PRE-CAST CONCRETE CO, INC. MODEL AV-ER-CH AND AV-BS.
2. JACK UP RINGS BETWEEN THE FRAME AND COVER NOT ACCEPTABLE.
3. PARGE CONCRETE ELEVATION RINGS WITH GROUT INSIDE AND OUT, CONTINUE ONTO CASTING.
4. IF REDUCERS ARE REQUIRED THEY MUST BE INSTALLED ONTO SWEEPING WYE
5. SOLVENT WELD PVC COUPLING SHALL BE USED TO CONNECT SWEEPING WYE TO EXISTING VACUUM MAIN
6. ACCEPTED WYES ARE 6"X6"X4", 6"X6"X2", AND 4"X4"X2"
7. WYE SHALL MATCH VACUUM MAIN DIAMETER
6. TEES WITH THE FOLLOWING DIMENSIONS CAN BE USED 6"X6"X2", AND 4"X4"X2"

NOT TO SCALE

HRSD	STANDARD DESIGN DETAIL	DRAWING NO. 276
		SHEET 1 OF 1
	VACUUM AIR INTAKE VALVE	DATE 1/2021

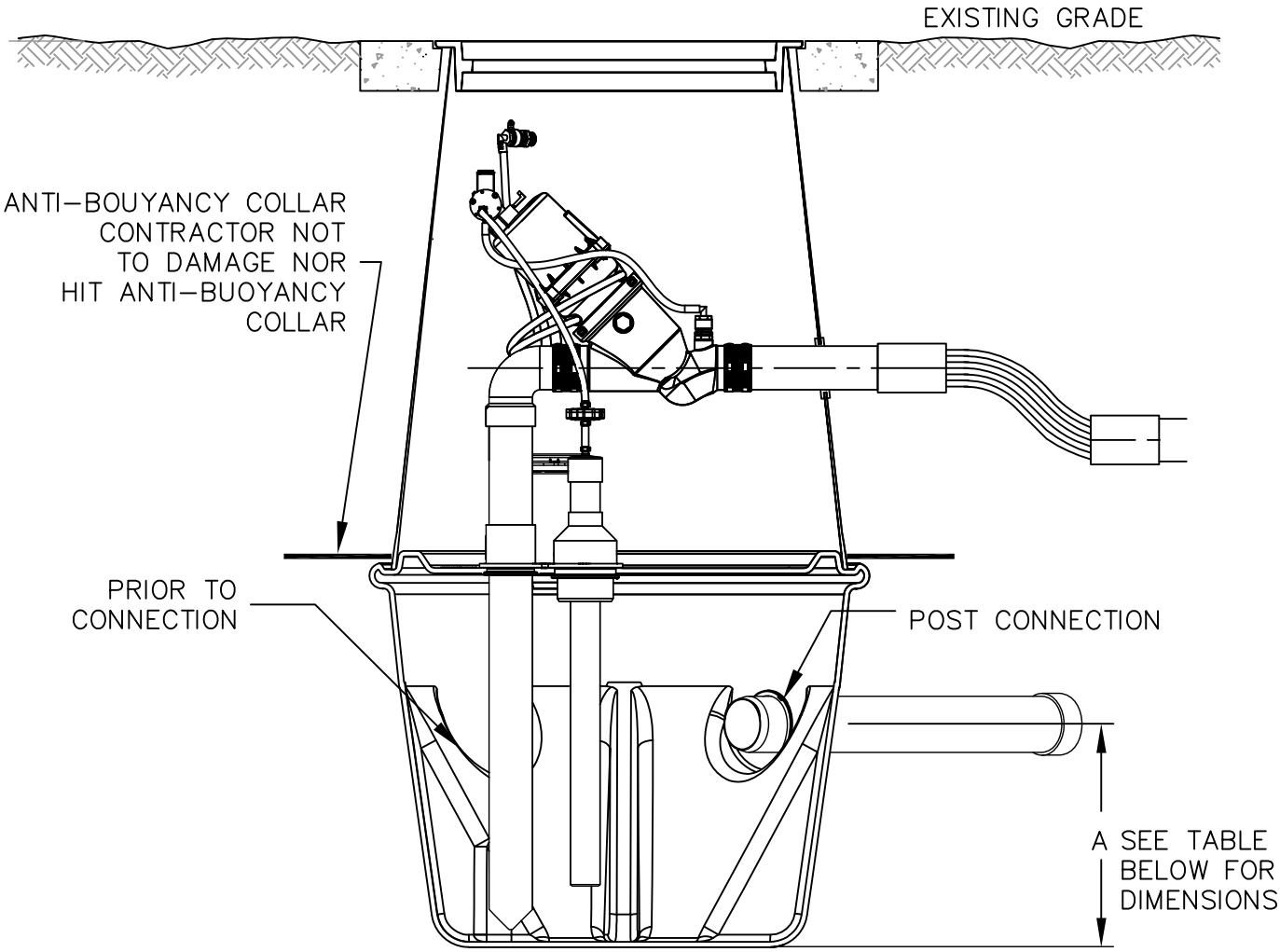

NOTES:

SEQUENCE FOR CONNECTION

1) CONTRACTOR WILL HAVE TO EXCAVATE TO THE BOTTOM THE EXISTING VALVE PIT
2) UTILIZING THE TABLE TO THE RIGHT MEASURE AND MARK THE CENTER OF A 5" CORE HOLE
3) CORE A 5" HOLE INTO THE SUMP AND INSTALL A 4" DOUBLE LIP SEAL RUBBER GROMMET WITH 4" SCH 40 PVC PIPE

*NOTE IF THE LATERAL IS 6" CORE WILL BE 7" AND CONTRACTOR WILL UTILIZE 6" DOUBLE LIP SEAL RUBBER GROMMET

	4" GRAVITY	6" GRAVITY
DIM "A"	1'–6"	1'–7"

NOT TO SCALE

HRSD

STANDARD DESIGN DETAIL

LATERAL CONNECTION TO EXISTING VACUUM VALVE PIT

DRAWING NO. 277

SHEET 1 OF 1

DATE 1/2021

DIVISION VALVE SUPPORT INFORMATION	
VALVE SIZE	SUPPORT SIZE
4"	6" THICK X 1.75' SQUARE
6"	6" THICK X 2.25' SQUARE
8"	6" THICK X 3.00' SQUARE
10"	6" THICK X 3.50' SQUARE

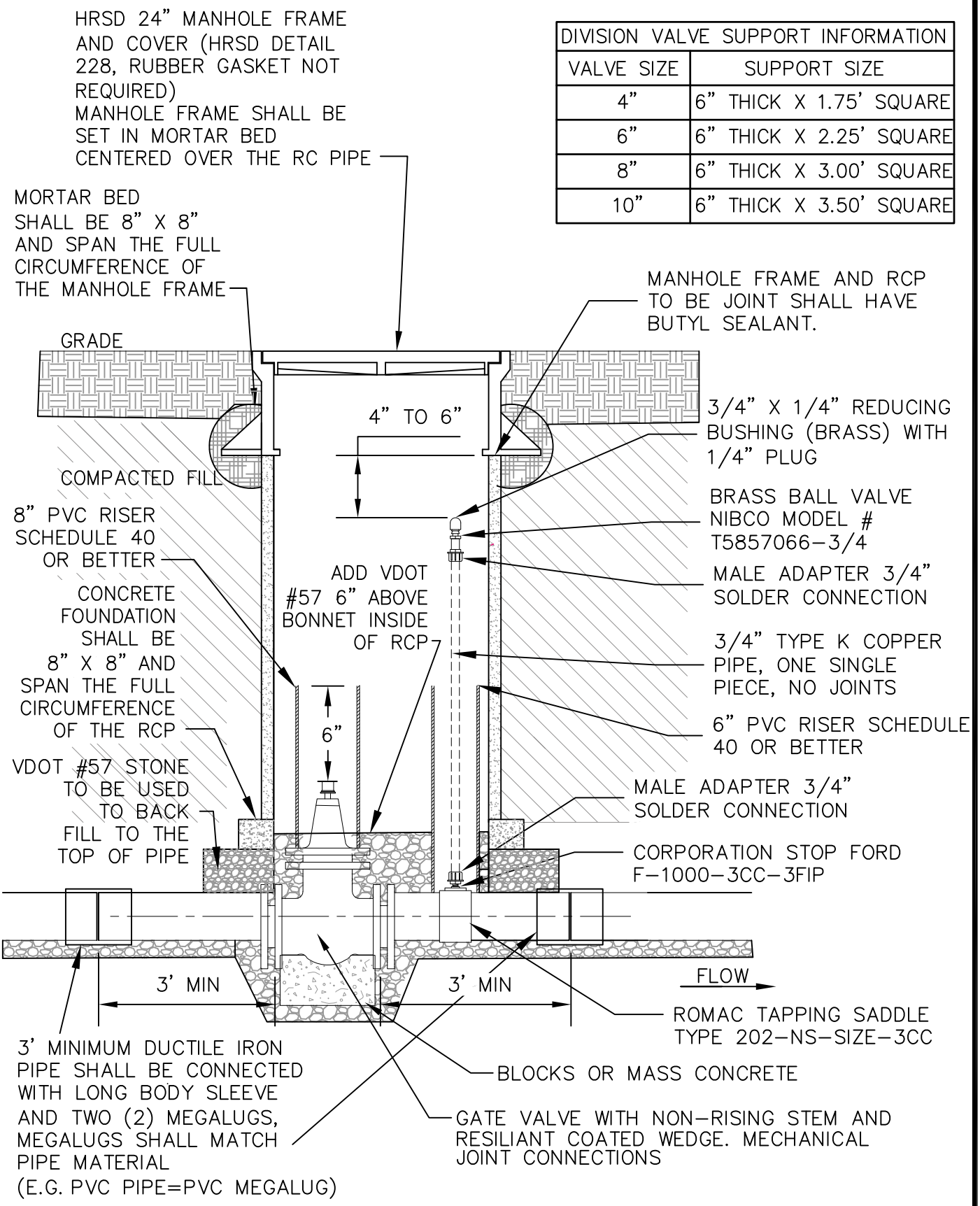

NOT TO SCALE

HRSD

STANDARD DESIGN DETAIL

VACUUM SYSTEM DIVISION VALVE

DRAWING NO. 278

SHEET 1 OF 1

DATE 1/2021

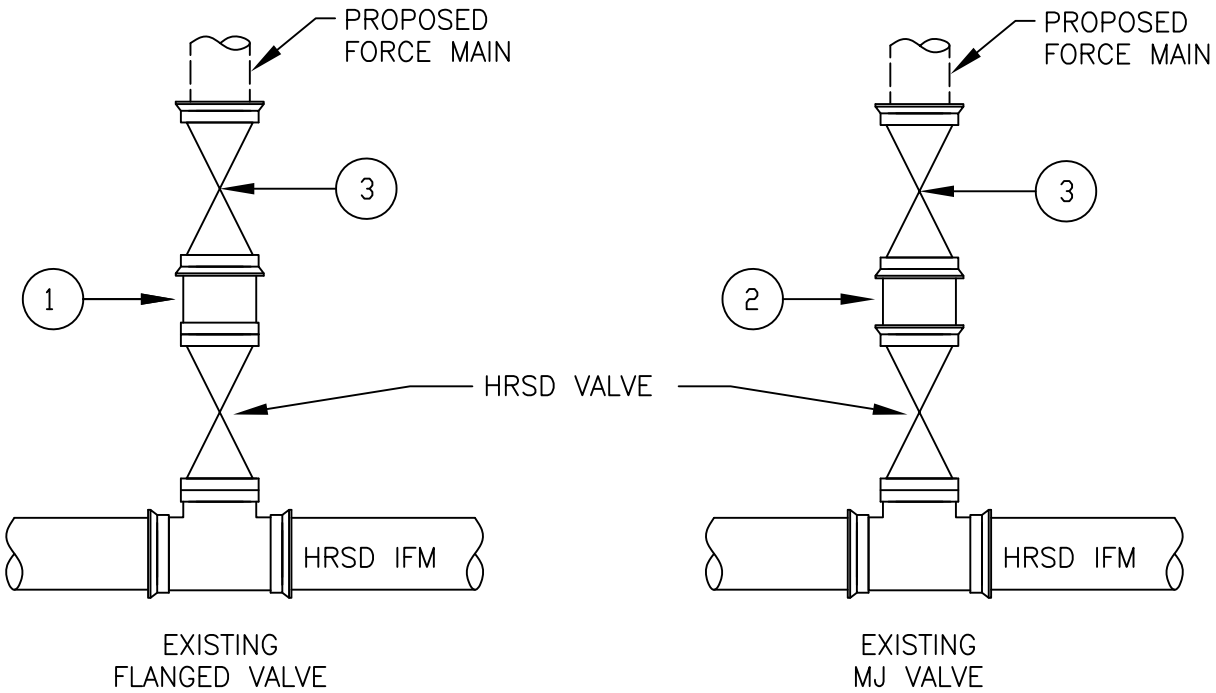

NOTES:

1. FL X PE NIPPLE WITH MEGA-LUG.
2. PE X PE NIPPLES WITH MEGA-LUGS. THE USE OF FOSTER ADAPTERS WILL BE CONSIDERED ON A CASE-BY-CASE BASIS BY HRSD.
3. JURISDICTION VALVE.
   a. JURISDICTION VALVE TO BE SAME SIZE AS EXISTING HRSD VALVE.
   b. ECCENTRIC REDUCERS TO BE INSTALLED AS NEEDED AFTER JURISDICTION VALVE.
   c. HRSD PIPELINES THAT HAVE CORROSION PROTECTION IN PLACE WILL REQUIRE AN ISOLATION COUPLING. CONTACT THE HRSD ENGINEER FOR DETAILS.

NOT TO SCALE

HRSD	STANDARD DESIGN DETAIL	DRAWING NO. 300
	CONNECTION TO EXISTING HRSD VALVE NO POTENTIAL FOR ADDITIONAL DEVELOPMENT	SHEET 1 OF 1 DATE 1/2021

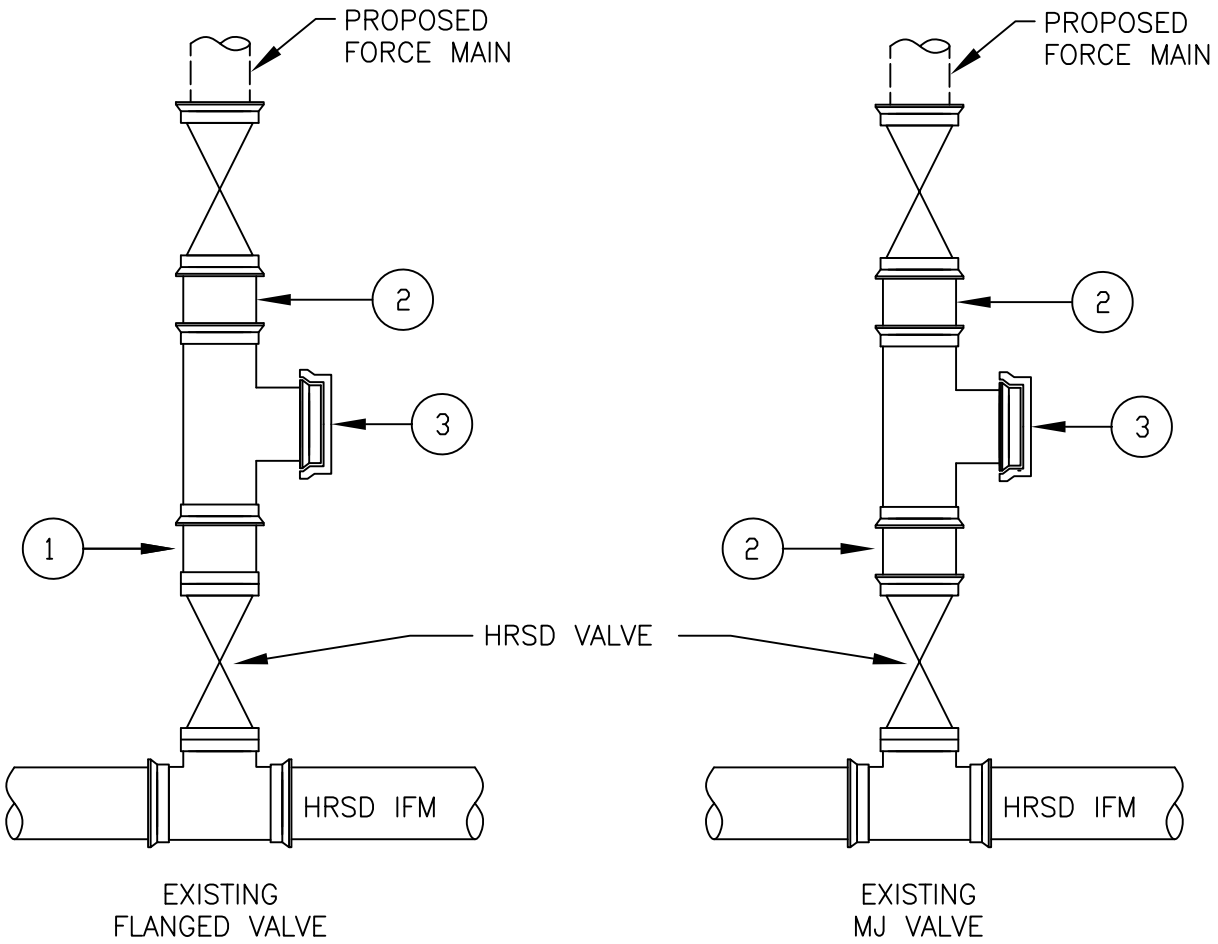

NOTES:

1. FL X PE NIPPLE WITH MEGA-LUG.
2. PE X PE NIPPLES WITH MEGA-LUGS. THE USE OF FOSTER ADAPTERS WILL BE CONSIDERED ON A CASE-BY-CASE BASIS BY HRSD.
3. MJ CAP/PLUG.
   a. JURISDICTION TO OWN TEE AND VALVE UPSTREAM OF HRSD VALVE.
   b. TEE AND JURISDICTION VALVE TO BE SAME SIZE AS EXISTING HRSD VALVE.
   c. ECCENTRIC REDUCERS TO BE INSTALLED AS NEEDED AFTER JURISDICTION VALVE.
   d. HRSD PIPELINES THAT HAVE CORROSION PROTECTION IN PLACE WILL REQUIRE AN ISOLATION COUPLING. CONTACT THE HRSD ENGINEER FOR DETAILS.

NOT TO SCALE

HRSD	STANDARD DESIGN DETAIL	DRAWING NO. 301
		SHEET 1 OF 1
	CONNECTION TO EXISTING HRSD VALVE ADDITIONAL DEVELOPMENT IS POSSIBLE	DATE 1/2021

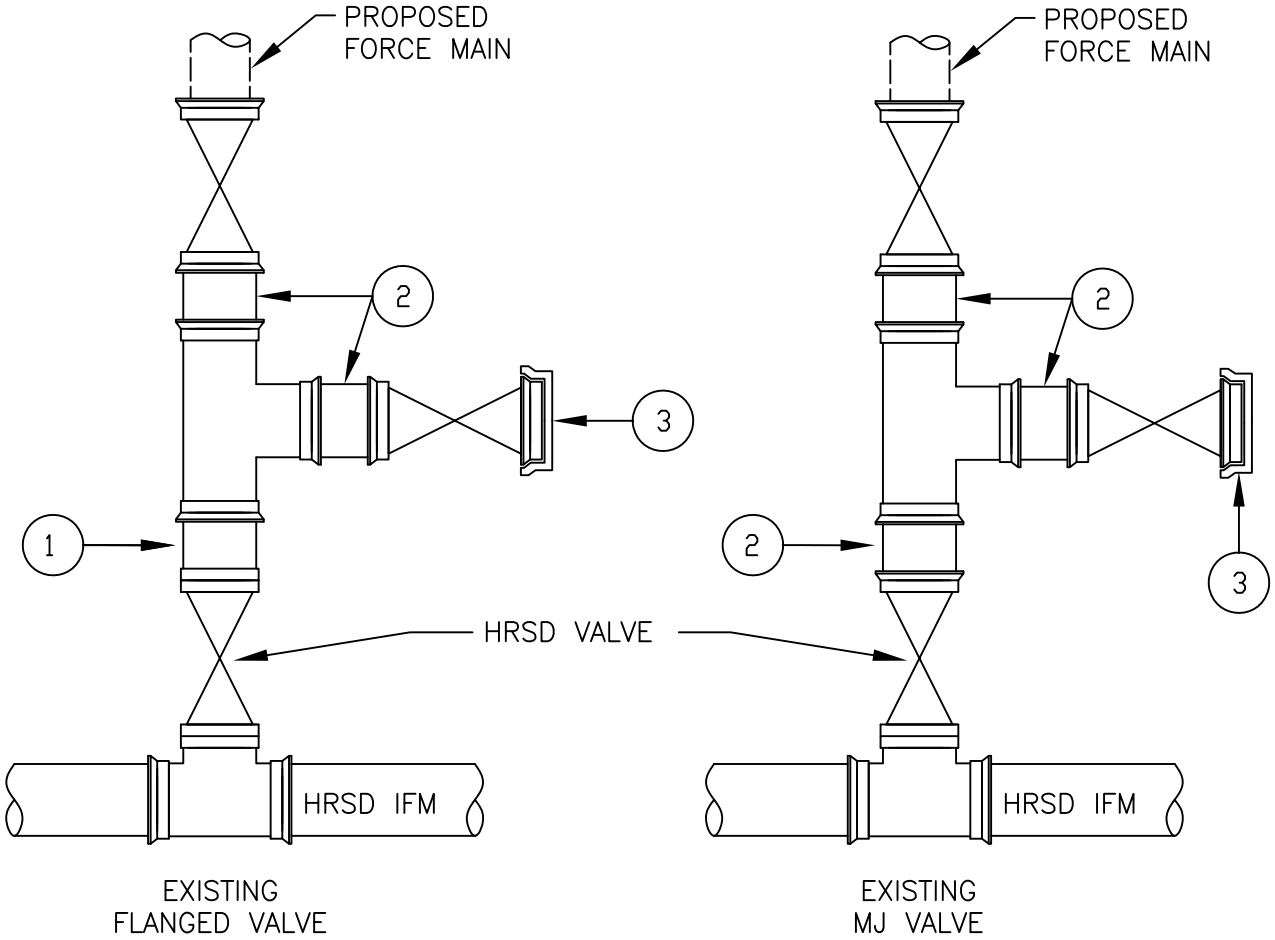

NOTES:

1. FL X PE NIPPLE WITH MEGA-LUG.
2. PE X PE NIPPLES WITH MEGA-LUGS. THE USE OF FOSTER ADAPTERS WILL BE CONSIDERED ON A CASE-BY-CASE BASIS BY HRSD.
3. MJ CAP/PLUG.
   a. JURISDICTION TO OWN TEE AND VALVES UPSTREAM OF HRSD VALVE.
   b. TEE AND JURISDICTION VALVES TO BE SAME SIZE AS EXISTING HRSD VALVE.
   c. ECCENTRIC REDUCERS TO BE INSTALLED AS NEEDED AFTER JURISDICTION VALVE.
   d. HRSD PIPELINES THAT HAVE CORROSION PROTECTION IN PLACE WILL REQUIRE AN ISOLATION COUPLING. CONTACT THE HRSD ENGINEER FOR DETAILS.

NOT TO SCALE

HRSD	STANDARD DESIGN DETAIL	DRAWING NO. 302
		SHEET 1 OF 1
	CONNECTION TO EXISTING HRSD VALVE ADDITIONAL DEVELOPMENT IS IMMINENT	DATE 1/2021

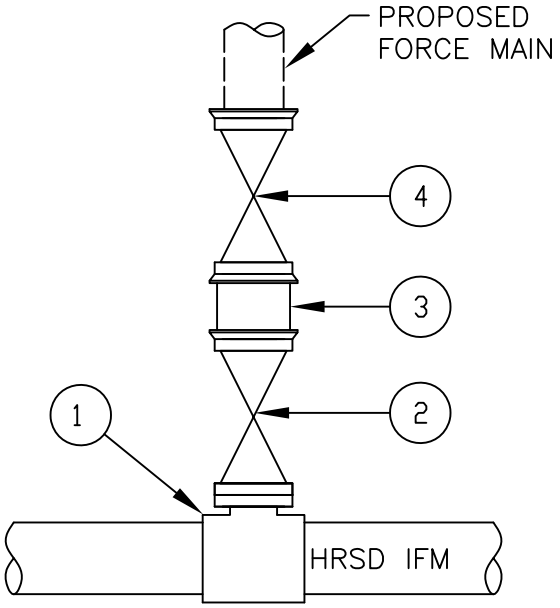

NOTES:

1. TAPPING SADDLE PER HRSD STANDARD DETAILS.
2. TAPPING VALVE (8"MIN.) (FL X MJ). TO BE OWNED BY HRSD.
3. FOSTER ADAPTER OR PE X PE NIPPLE WITH MEGA-LUGS USE OF FOSTER ADAPTORS SHALL BE APPROVED BY HRSD ON A CASE BY CASE BASIS.
4. JURISDICTION VALVE.
   a. JURISDICTION VALVE TO BE SAME SIZE AS HRSD VALVE.
   b. ECCENTRIC REDUCERS TO BE INSTALLED AS NEEDED AFTER JURISDICTION VALVE.
   c. HRSD PIPELINES THAT HAVE CORROSION PROTECTION IN PLACE WILL REQUIRE AN ISOLATION COUPLING. CONTACT THE HRSD ENGINEER FOR DETAILS.

NOT TO SCALE

HRSD	STANDARD DESIGN DETAIL	DRAWING NO. 303
	NEW WET TAPS NO POTENTIAL FOR ADDITIONAL DEVELOPMENT	SHEET 1 OF 1 DATE 1/2021

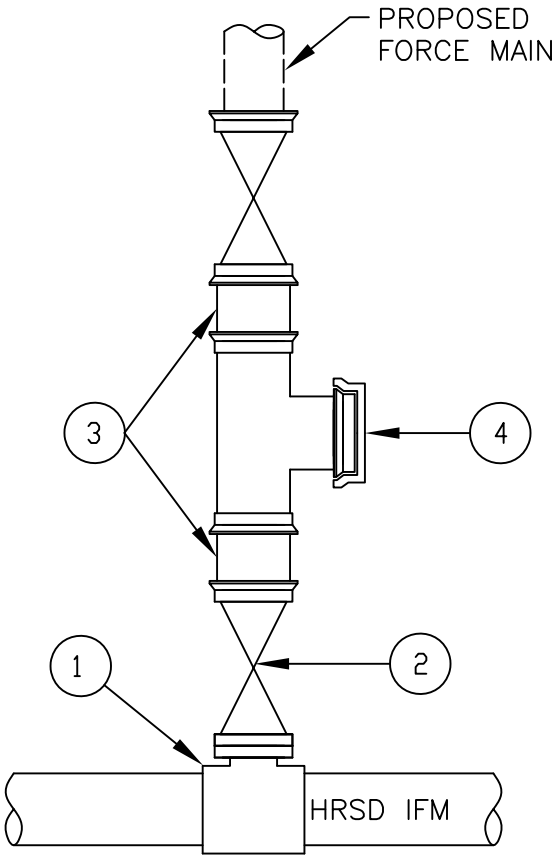

NOTES:

1. TAPPING SADDLE PER HRSD STANDARD DETAILS.
2. TAPPING VALVE (8"MIN.) (FL X MJ). TO BE OWNED BY HRSD.
3. FOSTER ADAPTERS OR PE X PE NIPPLES WITH MEGA-LUGS USE OF FOSTER ADAPTORS SHALL BE APPROVED BY HRSD ON A CASE BY CASE BASIS.
4. MJ CAP/PLUG.
   a. JURISDICTION TO OWN TEE AND VALVE UPSTREAM OF HRSD VALVE.
   b. TEE AND JURISDICTION VALVE TO BE SAME SIZE AS HRSD VALVE.
   c. ECCENTRIC REDUCERS TO BE INSTALLED AS NEEDED AFTER JURISDICTION VALVE.
   d. HRSD PIPELINES THAT HAVE CORROSION PROTECTION IN PLACE WILL REQUIRE AN ISOLATION COUPLING. CONTACT THE HRSD ENGINEER FOR DETAILS.

NOT TO SCALE

HRSD	STANDARD DESIGN DETAIL	DRAWING NO. 304
	NEW WET TAPS ADDITIONAL DEVELOPMENT IS POSSIBLE	SHEET 1 OF 1 DATE 1/2021

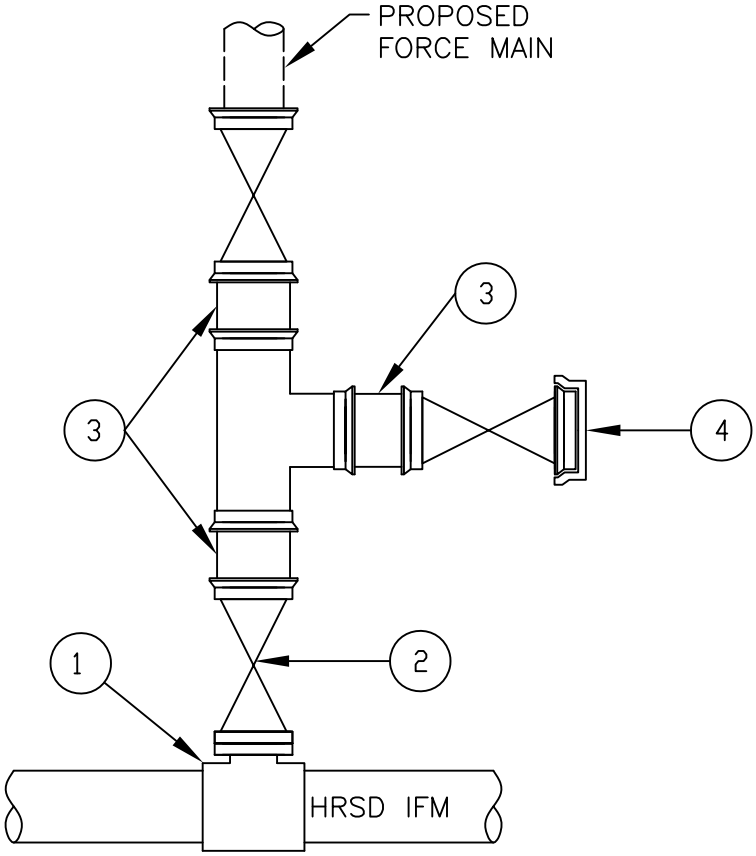

NOTES:

1. TAPPING SADDLE PER HRSD STANDARD DETAILS.
2. TAPPING VALVE (8"MIN.) (FL X MJ). TO BE OWNED BY HRSD.
3. FOSTER ADAPTERS OR PE X PE NIPPLES WITH MEGA-LUGS USE OF FOSTER ADAPTORS SHALL BE APPROVED BY HRSD ON A CASE BY CASE BASIS.
4. MJ CAP/PLUG.
   a. JURISDICTION TO OWN TEE AND VALVES UPSTREAM OF HRSD VALVE.
   b. TEE AND JURISDICTION VALVE TO BE SAME SIZE AS HRSD VALVE.
   c. ECCENTRIC REDUCERS TO BE INSTALLED AS NEEDED AFTER JURISDICTION VALVE.
   d. HRSD PIPELINES THAT HAVE CORROSION PROTECTION IN PLACE WILL REQUIRE AN ISOLATION COUPLING. CONTACT THE HRSD ENGINEER FOR DETAILS.

NOT TO SCALE

HRSD	STANDARD DESIGN DETAIL	DRAWING NO. 305
	NEW WET TAPS ADDITIONAL DEVELOPMENT IS IMMINENT	SHEET 1 OF 1 DATE 1/2021

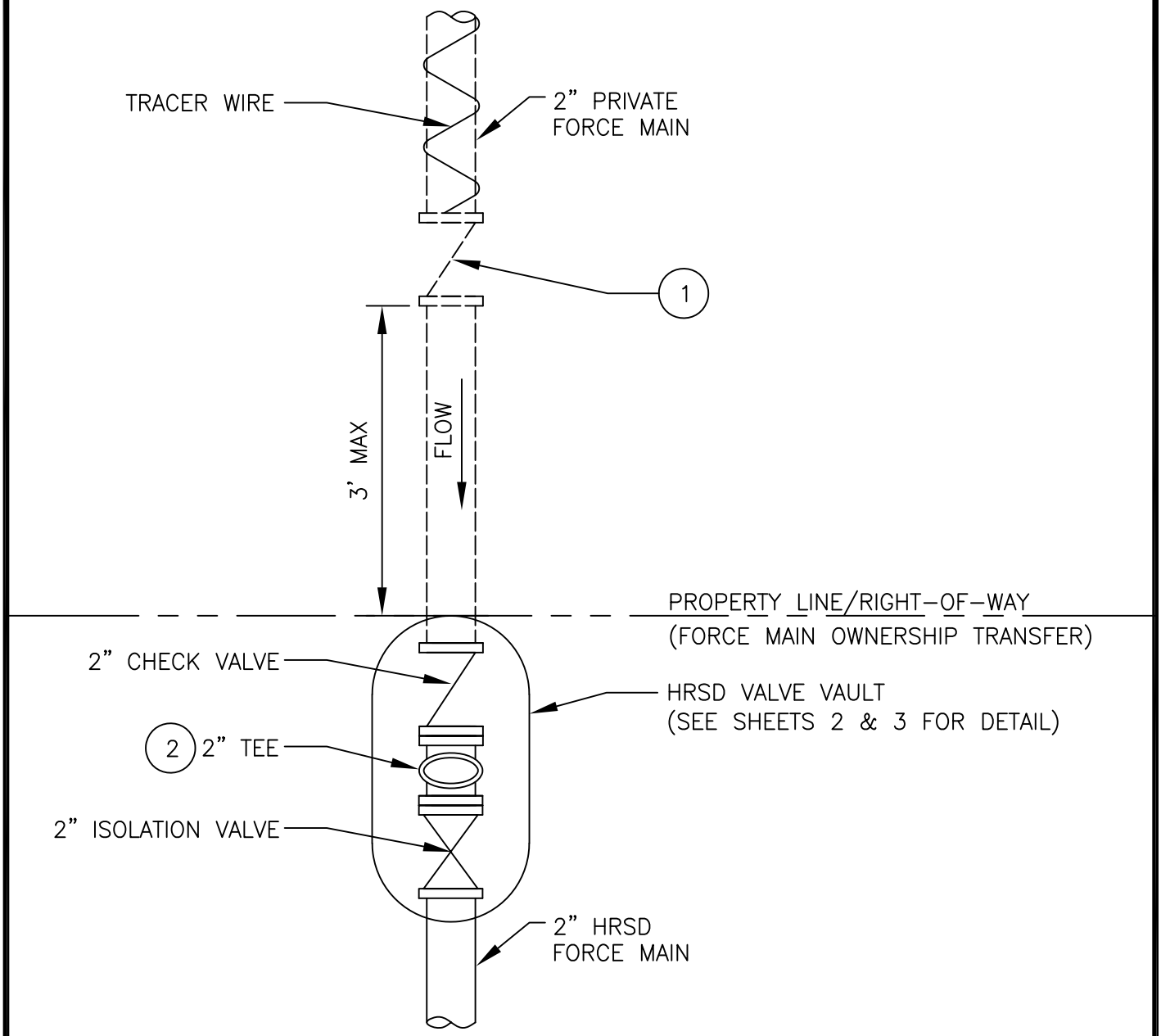

NOTES:

1. CHECK VALVE MUST BE INSTALLED ON PRIVATE DISCHARGE FORCE MAIN, INSIDE OF FRAME & COVER VB 7160 FROM CAPITAL FOUNDRY OF VIRGINIA.

2. ALL FITTINGS INSIDE OF HRSD VALVE VAULT SHALL BE 2" NPT.

NOT TO SCALE

HRSD	STANDARD DESIGN DETAIL	DRAWING NO. 306A
	2" PRIVATE FORCE MAIN CONNECTION TO EXISTING 2" HRSD FORCE MAIN STUB	SHEET 1 OF 3
		DATE 1/2021

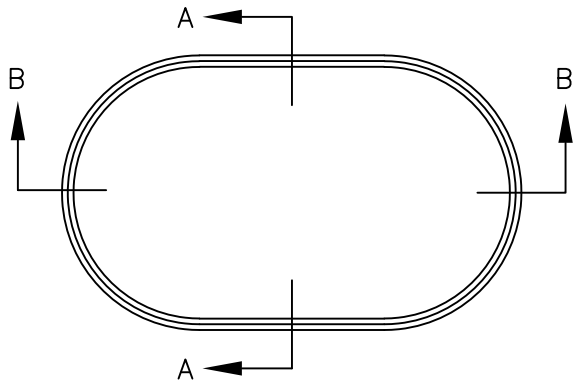

PLAN: VAULT

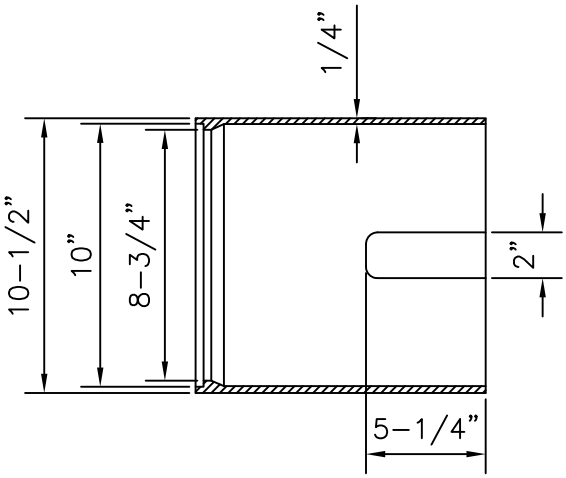

SECTION A-A

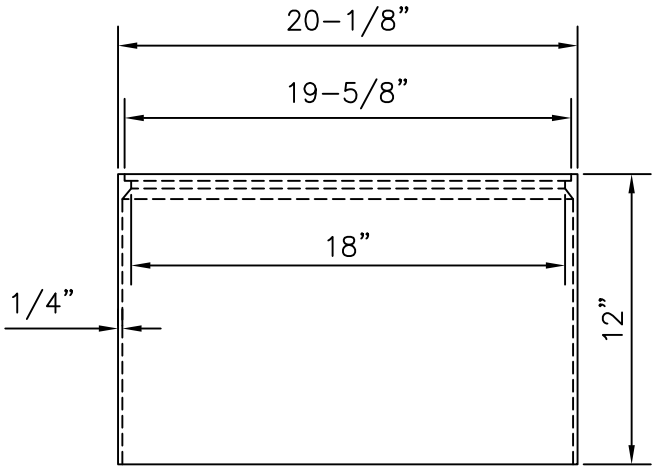

SECTION B-B

NOTES:

1. VALVE VAULT TO BE SUPPLIED BY CAPITAL FOUNDRY OF VIRGINIA, INC. (MODEL #MBX-1) OR APPROVED EQUAL.
2. ALL GRAY IRON CASTINGS SHALL CONFORM TO LATEST EDITION OF ASTM A-48, CLASS 30 AND SHALL BE OF UNIFORM QUALITY.
3. ALL CASTING DIMENSIONS SHALL HAVE A TOLERANCE OF 1/8"±.
4. ALL CASTINGS SHALL BE CLEANED BY SHOT BLASTING AND HAND CHIPPING UTILIZING STANDARD INDUSTRY PRACTICES PRIOR TO SHOP APPLICATION OF ASPHALTIC COATING, BY DIPPING.

NOT TO SCALE

HRSD	STANDARD DESIGN DETAIL	DRAWING NO. 306B
		SHEET 2 OF 3
	VALVE VAULT FOR 2" HRSD VALVE	DATE 1/2021

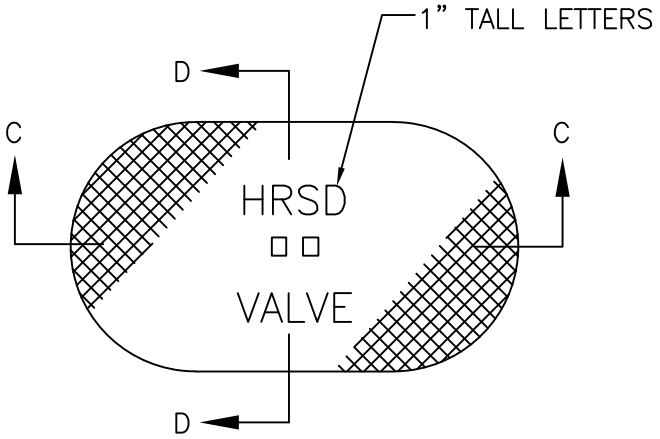

PLAN: LID

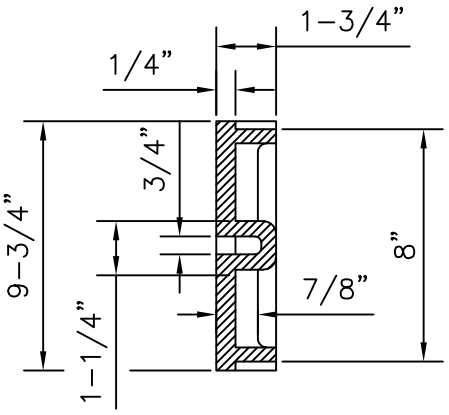

SECTION D-D

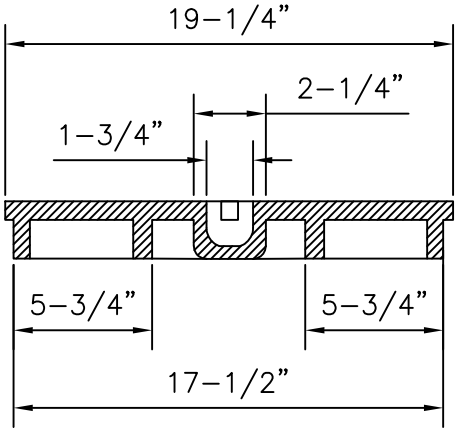

SECTION C-C

NOT TO SCALE

HRSD	STANDARD DESIGN DETAIL	DRAWING NO. 306C
		SHEET 3 OF 3
	VAULT LID FOR 2" HRSD VALVE	DATE 1/2021

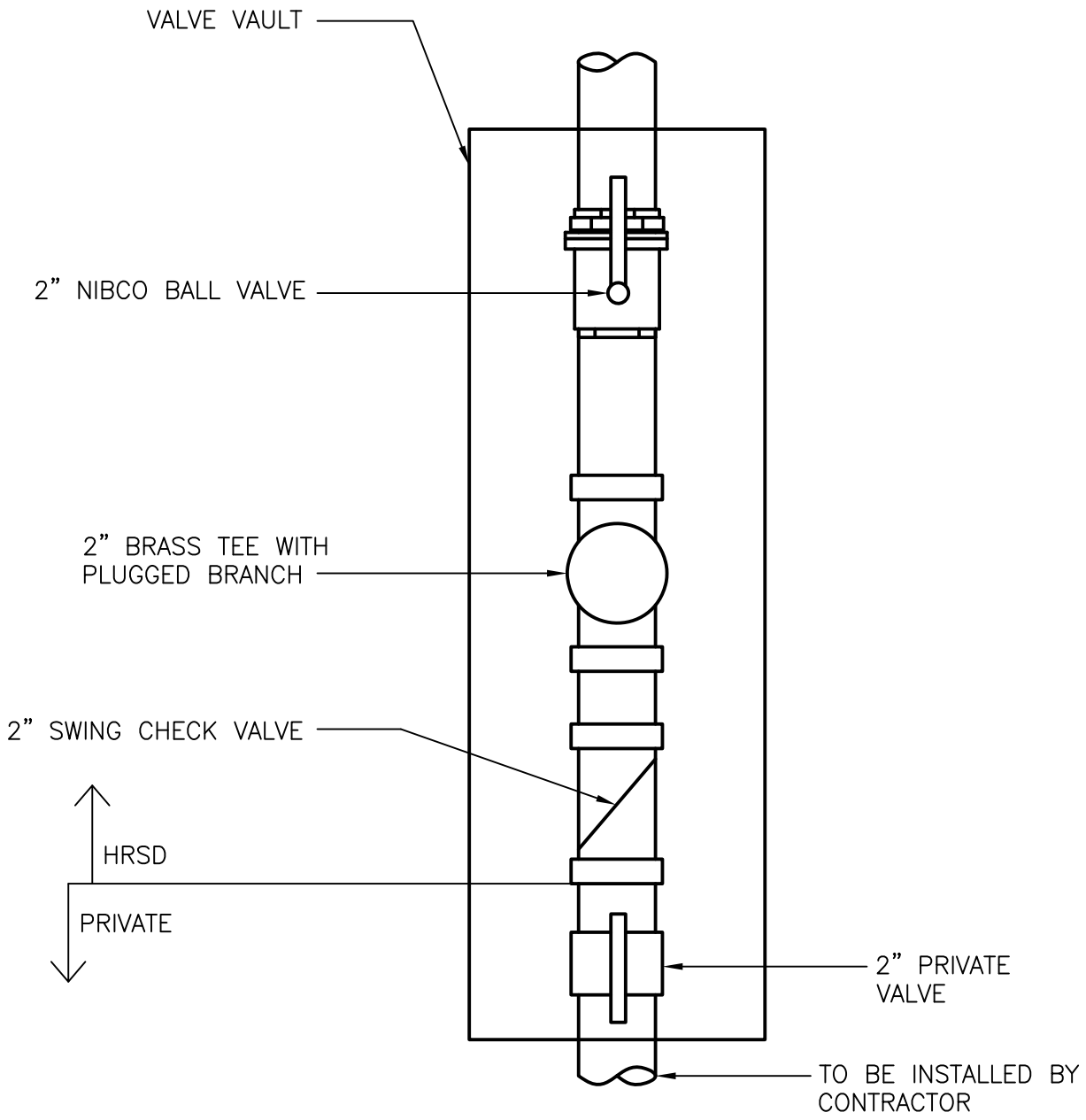

NOTES:

1. TRACER WIRE CAN BE TERMINATED INSIDE OF VALVE VAULT.
2. ALL FITTINGS AND PIPING TO BE BRASS WITH THREADED ENDS WITHIN THE VALVE VAULT.
3. OPERATION OF HRSD VALVES SHALL BE DONE BY HRSD PERSONNEL ONLY.
4. DEVIATION FROM THIS DETAIL WILL REQUIRE APPROVAL FROM HRSD.

NOT TO SCALE

HRSD	STANDARD DESIGN DETAIL	DRAWING NO. 307
		SHEET 1 OF 1
	LAWNES POINT PRIVATE CONNECTION DETAIL	DATE 1/2021

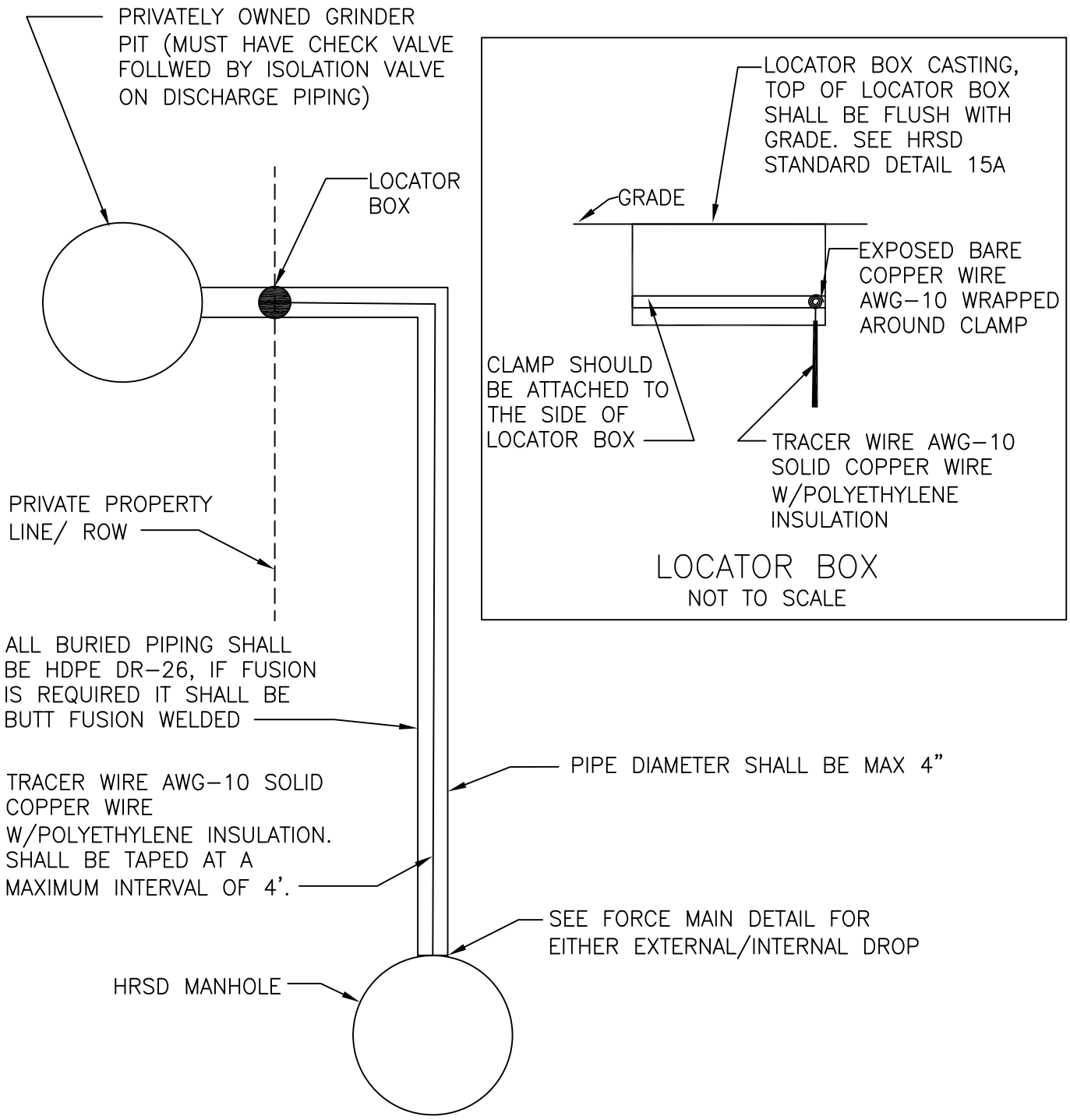

*IF CONNECTING TO HRSD FORCE MAIN REFERENCE HRSD STANDARD DETAIL 328

NOT TO SCALE

HRSD	STANDARD DESIGN DETAIL	DRAWING NO. 308
		SHEET 1 OF 1
	PRIVATE FORCE MAIN TO HRSD ASSET	DATE 1/2021

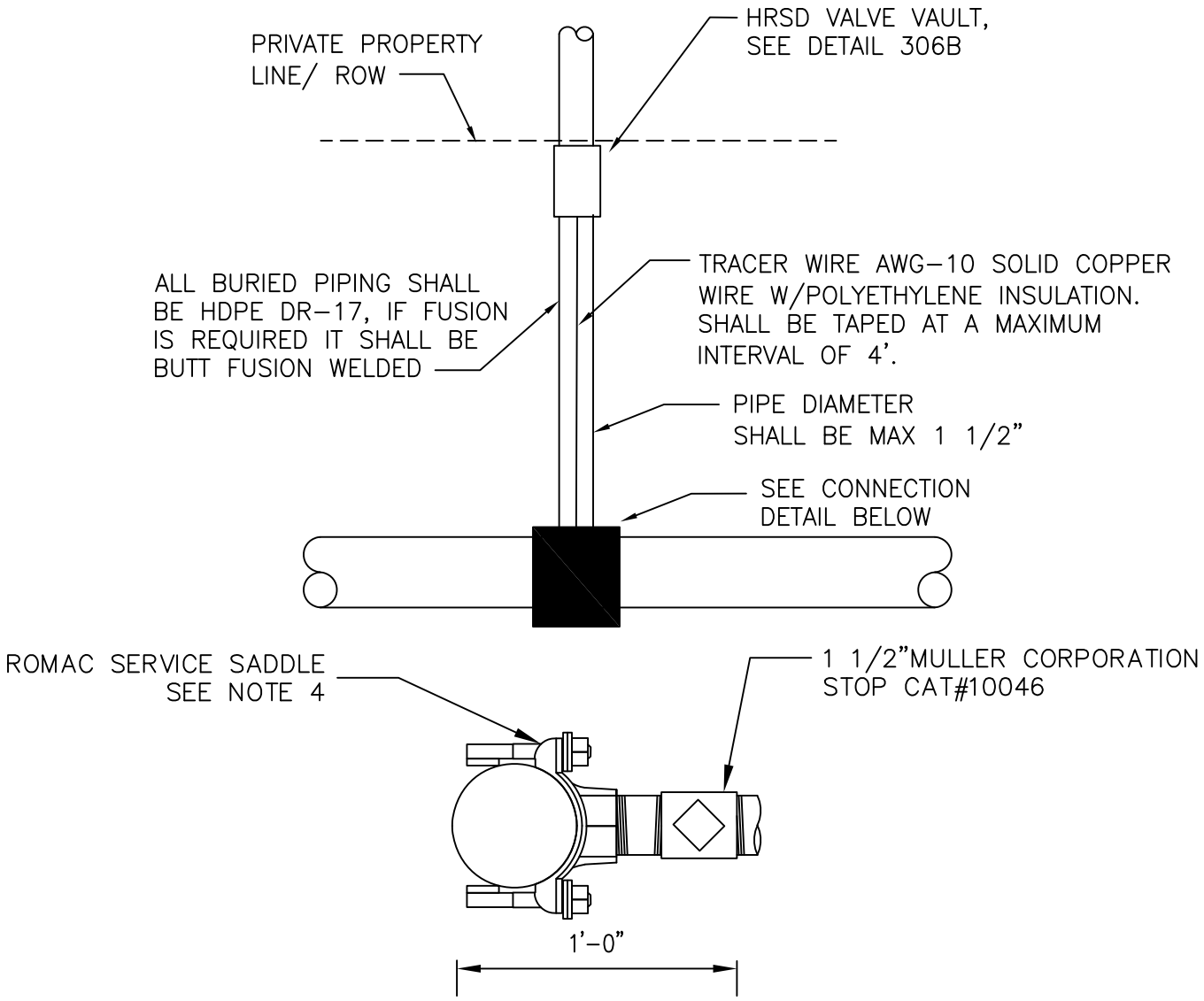

CONNECTION DETAIL

NOTE:

1. TAP WILL BE COMPLETED BY HRSD APPROVED CONTRACTOR. CONTRACTOR IS RESPONSIBLE FOR CONFIRMING PIPE MATERIAL AND SIZE, PROCURING CORRECT MATERIAL, EXCAVATION AND TRENCH SHORING, BACKFILLING AND INSTALLING HRSD VALVE AND ALL ASSOCIATED FITTINGS AND PIPE INSTALLATION.
2. TYPE IV BEDDING IS REQUIRED FOR THIS CONNECTION. SEE HRPDC DETAIL EW_01
3. REFER TO STANDARD DETAIL 306B FOR VAULT DETAIL
4. SERVICE CONNECTION SHALL BE ROMAC SERVICE SADDLE 202

NOT TO SCALE

HRSD	STANDARD DESIGN DETAIL	DRAWING NO. 309
		SHEET 1 OF 1
	NEW GRINDER PIT CONNECTION TO EXISTING HRSD FM	DATE 1/2021

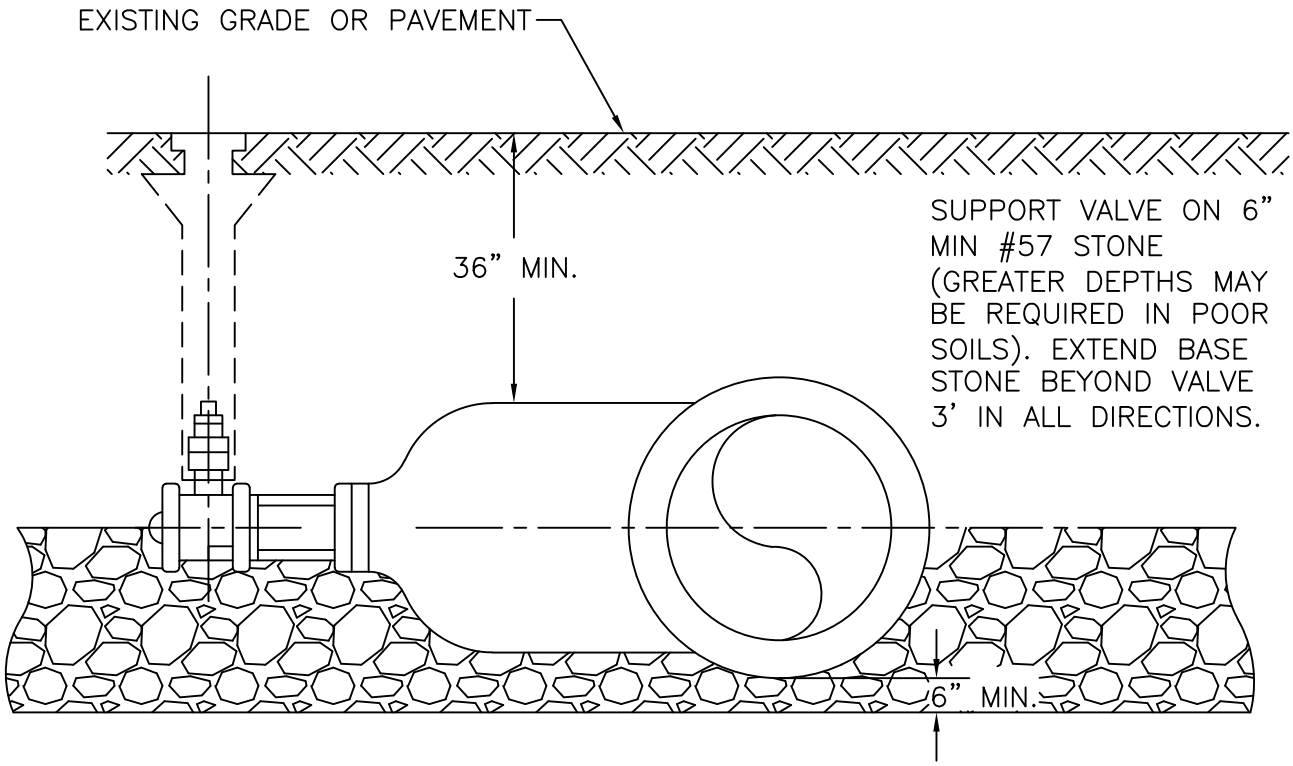

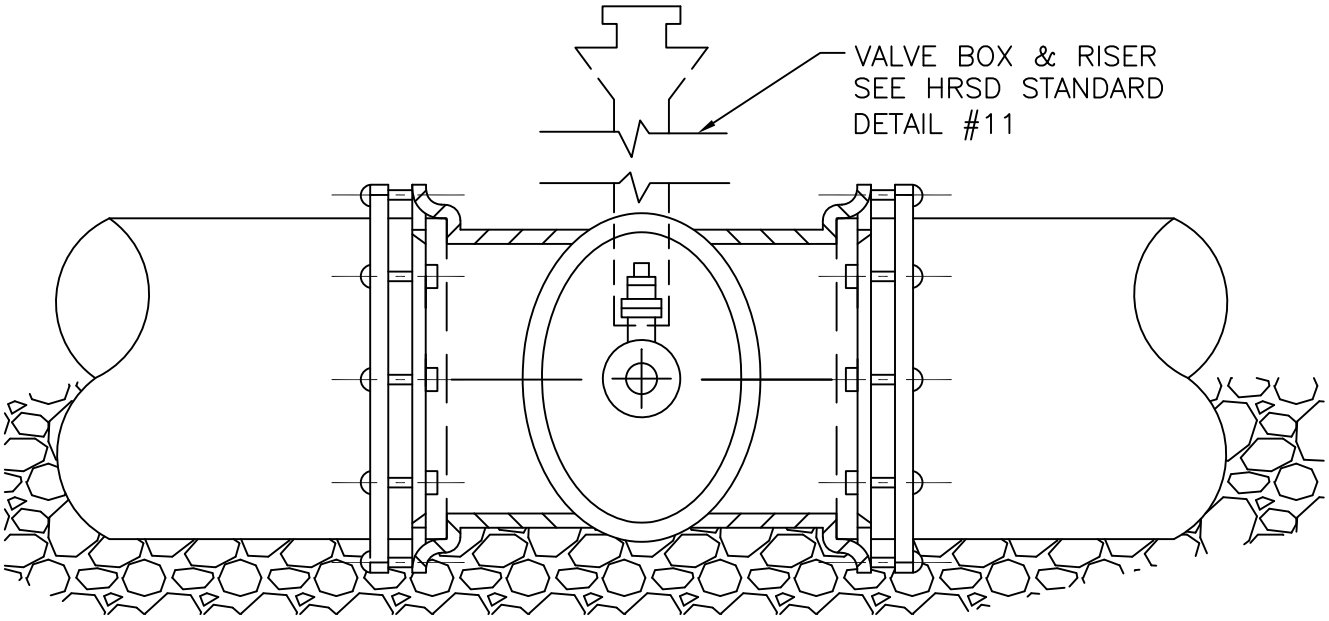

NOTE:

1. SEE SPECIFICATIONS FOR HORIZONTAL OR VERTICAL POSITION AND BY-PASS REQUIREMENT.
2. EXTENSION STEMS ARE NOT ACCEPTABLE.
3. INSTALL CRIBBING AS NECESSARY.

NOT TO SCALE

HRSD	STANDARD DESIGN DETAIL	DRAWING NO. 326
		SHEET 1 OF 1
	HORIZONTAL GATE VALVE	DATE 1/2021

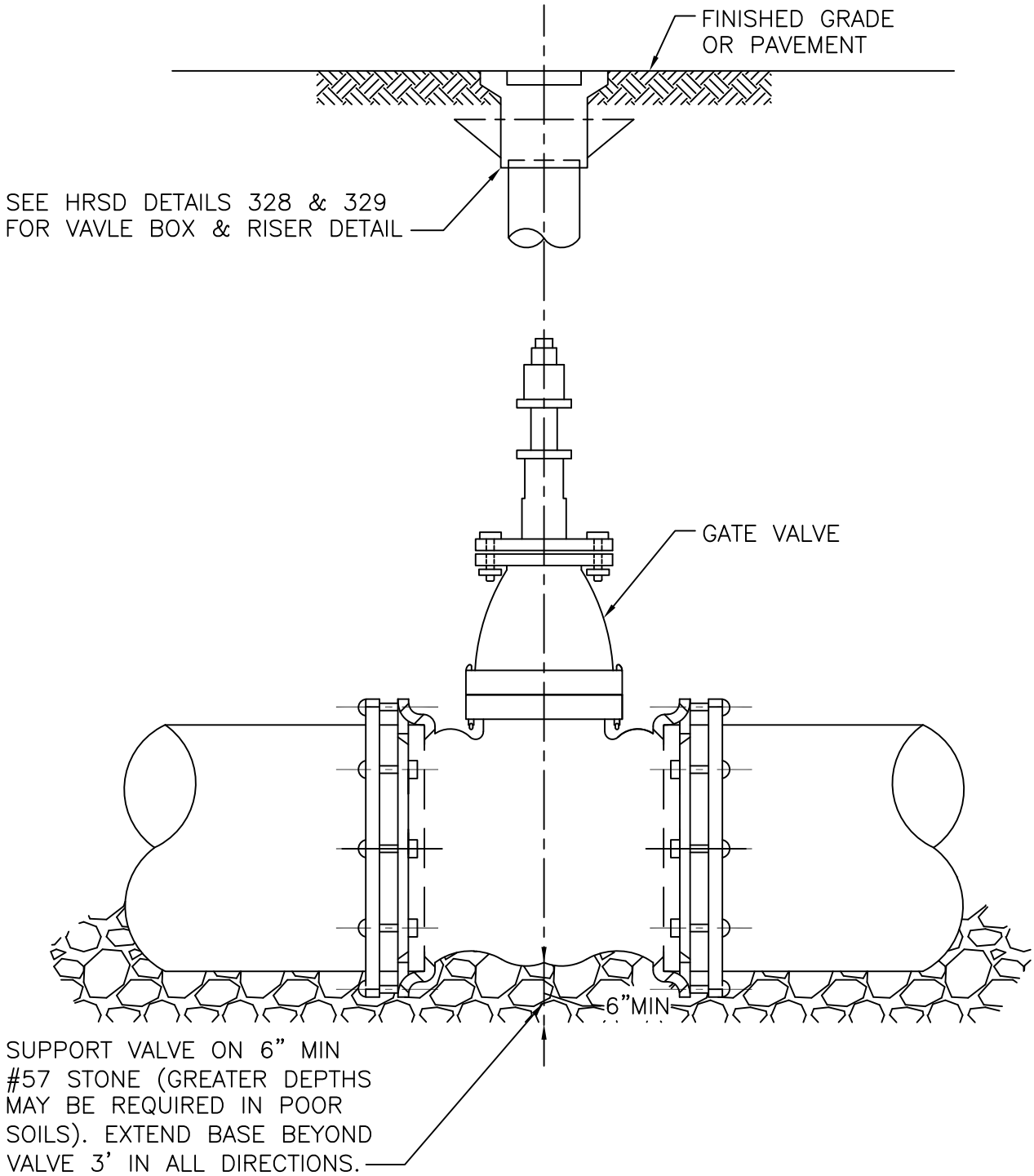

NOTE:

1. SEE SPECIFICATIONS FOR HORIZONTAL OR VERTICAL POSITION AND BYPASS REQUIREMENT.
2. EXTENSION SYSTEMS ARE NOT ACCEPTABLE.
3. INSTALL CRIBBING AS NECESSARY.
4. THIS DETAIL ONLY APPLICABLE FOR VALVES 14" AND SMALLER.
5. MINIMUM VALVE SIZE SHALL BE 8".

NOT TO SCALE

HRSD	STANDARD DESIGN DETAIL	DRAWING NO. 327
		SHEET 1 OF 1
	VERTICAL GATE VALVE	DATE 1/2021

MINIMUM WEIGHTS:
COVER – 22 LBS.
FRAME – 110 LBS.

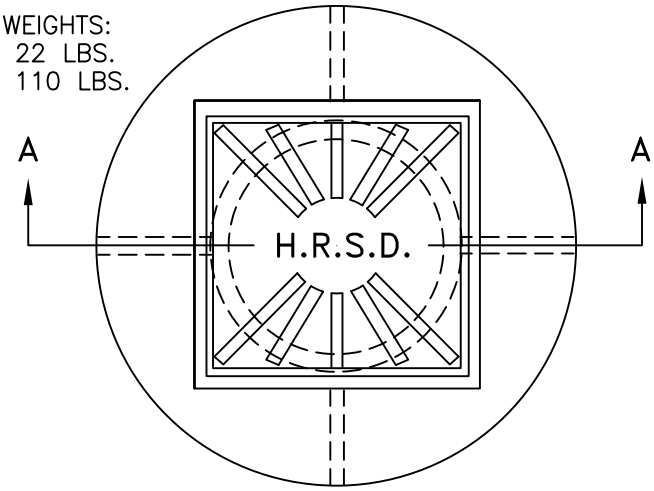

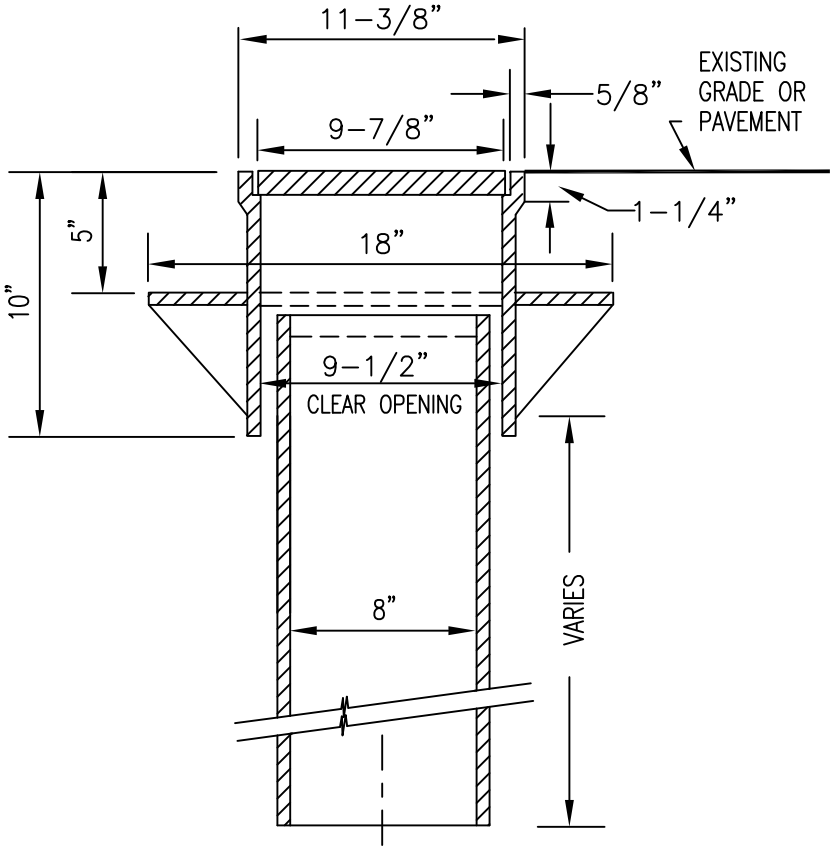

SECTION A–A

NOTES:

1. RISER TO BE 8" C900 PVC OR 8" SCH. 80 PVC. (ONE PIECE). BELL END PIECE SHALL NOT BE ALLOWED.
2. TOLERANCE TO BE +/–.125" FOR ALL DIMENSIONS.
3. CASTING TO BE SHOT BLASTED.
4. CASTING TO BE ASTM A–48 CLASS 30.
5. JACK UP RINGS NOT ACCEPTABLE.
6. TOP OF RISER PIPE SHALL BE 5" BELOW THE LIP FOR THE CASTING LID.
7. RISER SHALL BE CENTERED ON THE FORCE MAIN AND SHALL BE PLUMB AND STRAIGHT.
8. SEE MASTER SPEC SECTION 0134 FOR AMERICAN IRON AND STEEL REQUIREMENT.

NOT TO SCALE

HRSD	STANDARD DESIGN DETAIL	DRAWING NO. 328
		SHEET 1 OF 1
	VALVE BOX & RISER FOR MAINLINE VALVE	DATE 1/2021

MINIMUM WEIGHTS:
COVER – 25 LBS.
FRAME – 75 LBS.

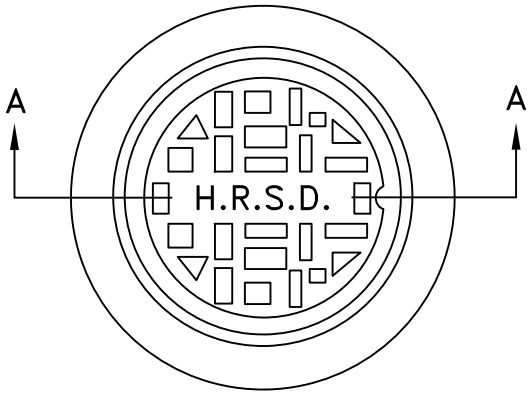

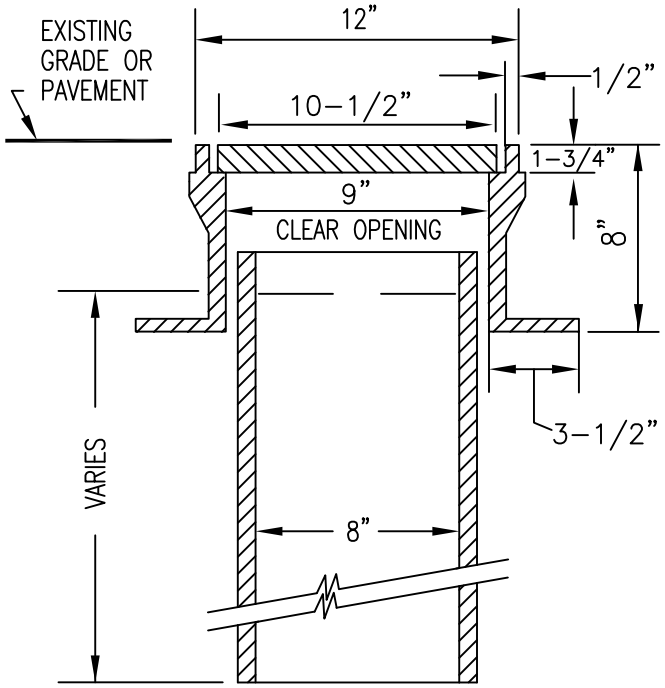

SECTION A–A

NOTES:

1. RISER TO BE 8" C900 PVC OR 8" SCH. 80 PVC. (ONE PIECE). BELL END PIECE SHALL NOT BE ALLOWED.
2. TOLERANCE TO BE +/–.125" FOR ALL DIMENSIONS.
3. CASTING TO BE SHOT BLASTED.
4. CASTING TO BE ASTM A–48 CLASS 30.
5. JACK UP RINGS NOT ACCEPTABLE.
6. TOP OF RISER PIPE SHALL BE 5" BELOW THE LIP FOR THE CASTING LID.
7. RISER SHALL BE CENTERED ON THE NUT AND SHALL BE PLUMB AND STRAIGHT.
8. SEE MASTER SPEC SECTION 01340 FOR AMERICAN IRON AND STEEL REQUIREMENT.

NOT TO SCALE

HRSD	STANDARD DESIGN DETAIL	DRAWING NO. 329
		SHEET 1 OF 1
	VALVE BOX & RISER FOR BYPASS VALVES	DATE 1/2021

MINIMUM WEIGHTS:
COVER – 22 LBS.
FRAME – 110 LBS.

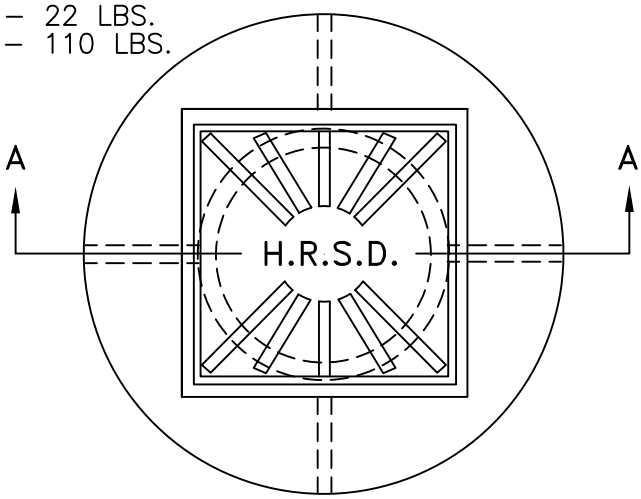

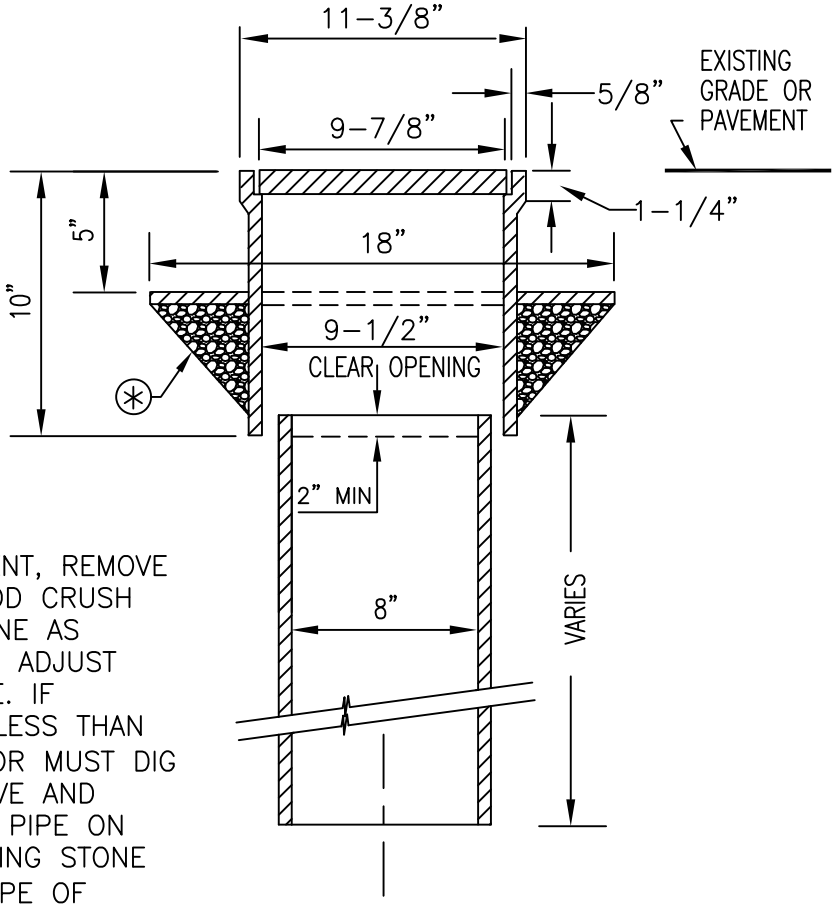

(*) FOR ADJUSTMENT, REMOVE FRAME AND ADD CRUSH AND RUN STONE AS NECESSARY TO ADJUST TOP TO GRADE. IF INSERTION IS LESS THAN 2", CONTRACTOR MUST DIG DOWN ON VALVE AND ADJUST RISER PIPE ON VALVE BY ADDING STONE OR NEW 8" PIPE OF APPROPRIATE LENGTH.

SECTION A–A

FOR USE ON MAINLINE OR CONNECTION VALVES

NOTES:
1. SEE MASTER SPEC SECTION 01340 FOR AMERICAN IRON AND STEEL REQUIREMENT.

NOT TO SCALE

HRSD	STANDARD DESIGN DETAIL	DRAWING NO. 330
		SHEET 1 OF 1
	VALVE RISER ADJUSTMENT	DATE 1/2021

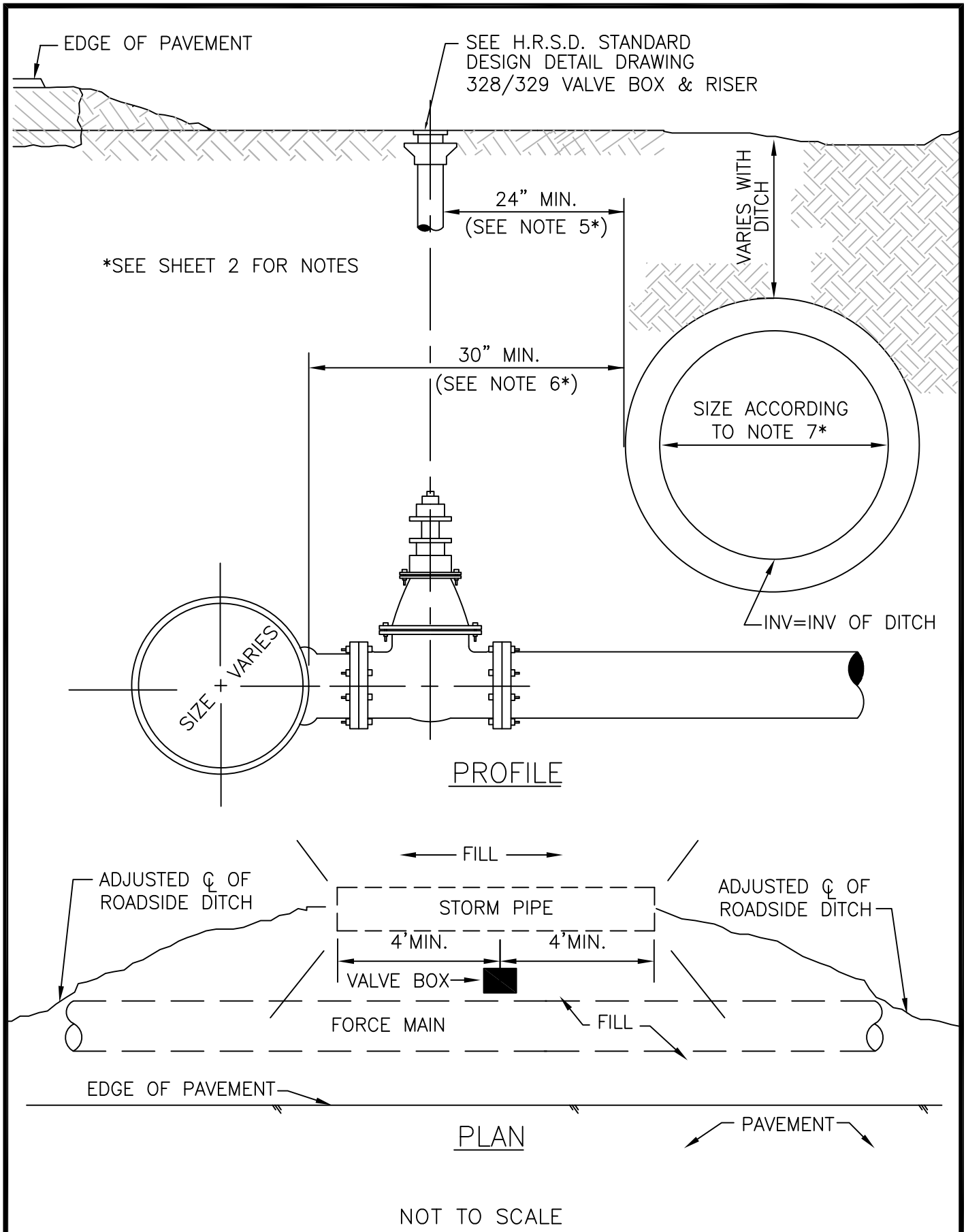

NOT TO SCALE

HRSD	STANDARD DESIGN DETAIL	DRAWING NO. 331A
		SHEET 1 OF 2
	ROADSIDE DITCH–VALVE BOX	DATE 1/2021

NOTES:

1. VALVE BOXES ARE TO BE ALIGNED TRUE AND SQUARE WITH EDGE OF PAVEMENT.
2. STORM PIPE SHALL EXTEND A MINIMUM OF FOUR (4) FEET TO EITHER SIDE OF VALVE BOX.
3. FILL MATERIAL SHALL CONFORM TO RIGHT OF WAY PERMIT REQUIREMENTS.
4. SLOPE FILL MATERIAL TO DRAIN AWAY FROM VALVE BOX TOWARDS DITCH.
5. MAINTAIN 24 INCH MINIMUM HORIZONTAL DISTANCE BETWEEN STORM PIPE AND VALVE RISER PIPE.
6. WHEN VALVE FACES AWAY FROM DITCH, MAINTAIN 30 INCH MINIMUM HORIZONTAL DISTANCE BETWEEN STORM PIPE AND FORCE MAIN.
7. STORM PIPE SHALL BE SIZED IN ACCORDANCE WITH RIGHT OF WAY PERMIT.
8. UPON COMPLETION OF VALVE BOX AND STORM PIPE INSTALLATION, CONTACT HRSD INSPECTOR FOR FINAL INSPECTION.

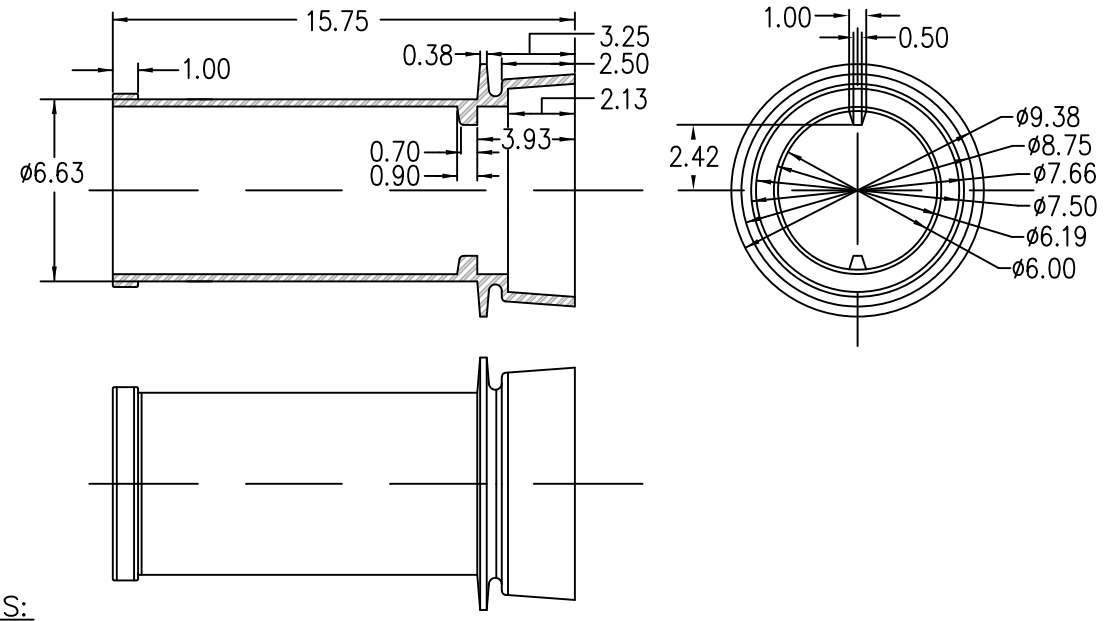

NOTES:

1. MATERIAL, CAST IRON, GRADE TO BE SPECIFIED ON PURCHASE ORDER.
2. ALL RADII SHALL BE 1/16" MINIMUM.
3. ESTIMATED WEIGHT 37#.

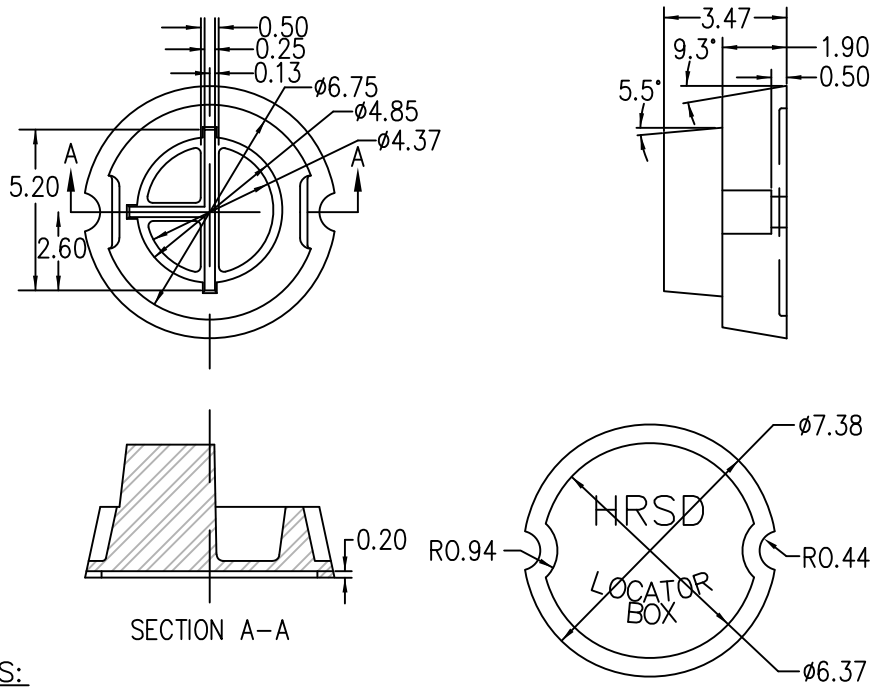

NOTES:

1. ALL INTERNAL EDGES SHALL HAVE A 1/16" RADIUS.
2. ALL EXTERNAL RADII 1/16" TO 1/8" AS NEEDED FOR CASTING RELIEF.
3. MATERIAL, CAST IRON, GRADE TO BE SPECIFIED ON PURCHASE ORDER.
4. ESTIMATED WEIGHT 12#.
5. RISER TO BE FILLED WITH PEA GRAVEL.

NOT TO SCALE

HRSD	STANDARD DESIGN DETAIL	DRAWING NO. 332
		SHEET 1 OF 1
	TRACER WIRE LOCATOR BOX	DATE 1/2021

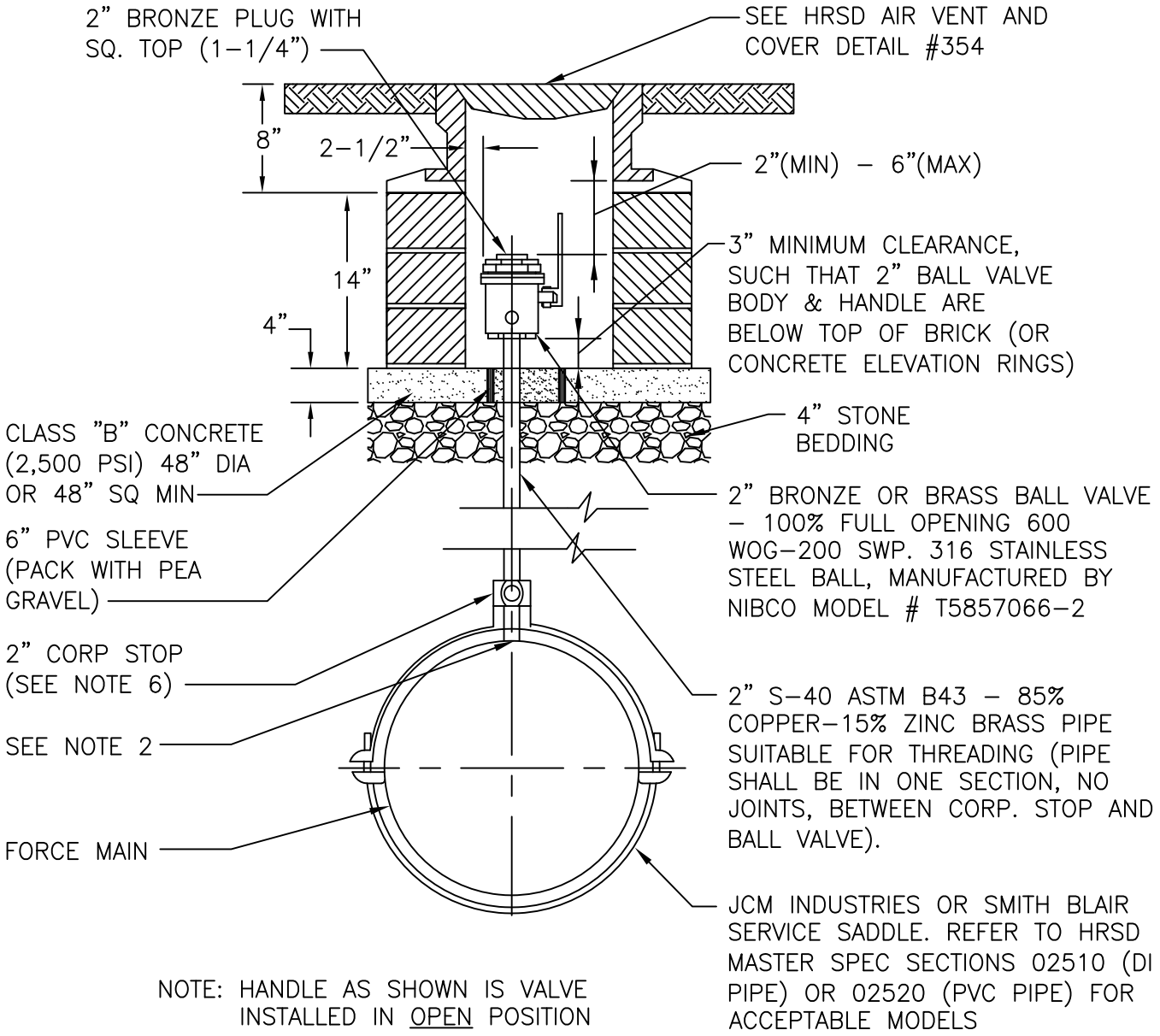

NOTE: HANDLE AS SHOWN IS VALVE INSTALLED IN OPEN POSITION

NOTES:

1. CONSTRUCT AIR VENT USING REQUIRED NUMBER OF COURSES OF HARD SOUND COMMON BRICK LAID ON EDGE OR CONCRETE ELEVATION RINGS AS MANUFACTURED BY NANSEMOND PRE-CAST CONCRETE CO, INC. MODEL AV-ER-CH AND AV-BS.
2. 2" TAP FOR AIR VENT SHALL BE STANDARD SADDLE TAP.
3. SERVICE SADDLE COATING SHALL BE FUSION BONDED EPOXY. SADDLE STRAPS AND HARDWARE SHALL BE STAINLESS STEEL. STAINLESS STEEL SHALL BE MINIMUM 304.
4. JACK UP RINGS BETWEEN THE FRAME AND COVER NOT ACCEPTABLE.
5. PARGE BRICK WORK OR CONCRETE ELEVATION RINGS WITH GROUT INSIDE AND OUT, CONTINUE ONTO CASTING.
6. MUELLER CATALOG NUMBER H10045N IS PREFERRED. REFER TO SPECIFICATION SECTION 02610 FOR ALLOWABLE ALTERNATIVES IF THE CONTRACTOR HAS DEMONSTRATED THE PREFERRED MODEL IS NOT AVAILABLE.

NOT TO SCALE

HRSD	STANDARD DESIGN DETAIL	DRAWING NO. 351
		SHEET 1 OF 1
	MANUAL AIR VENT	DATE 1/2023

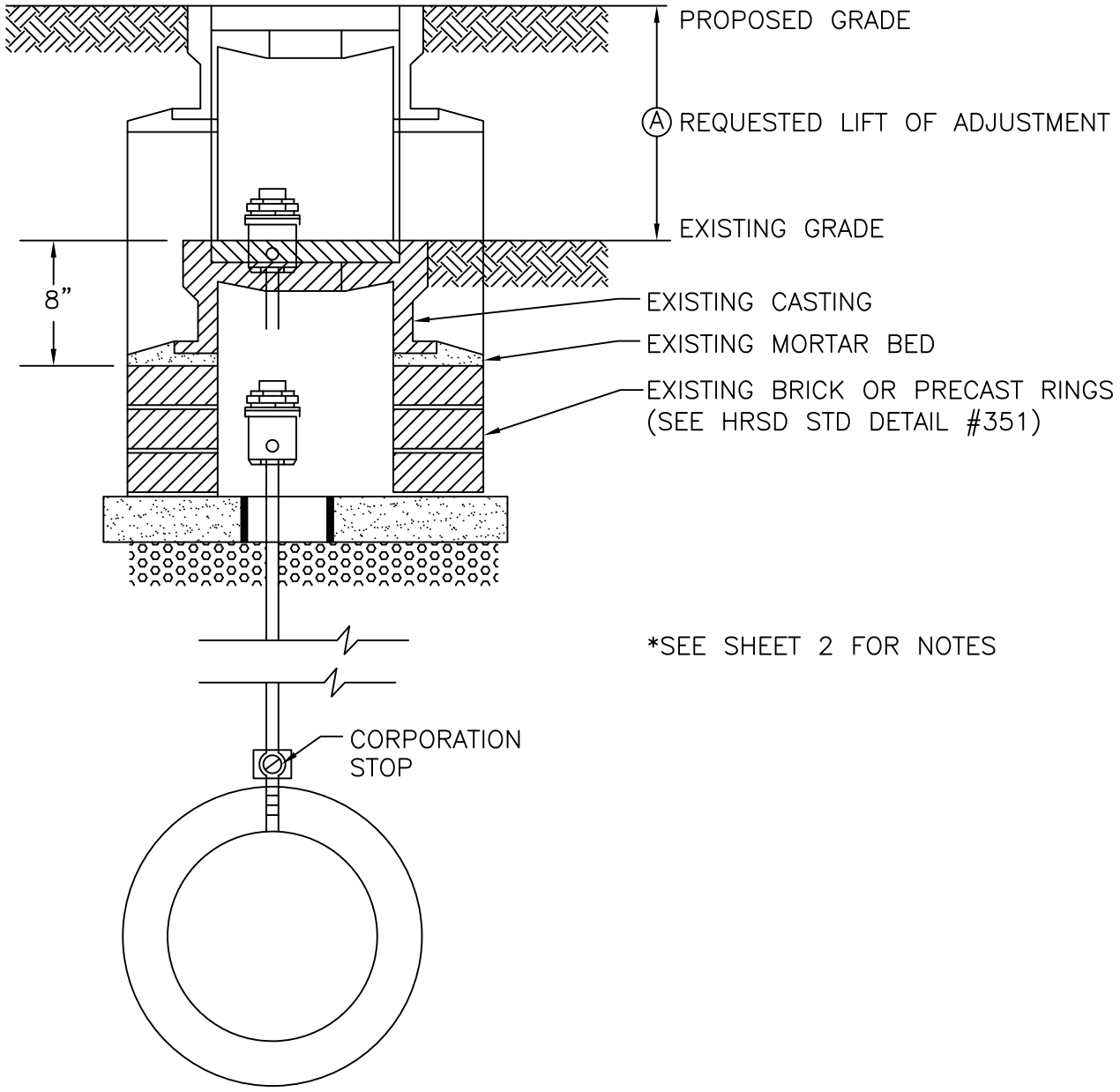

NOT TO SCALE

HRSD	STANDARD DESIGN DETAIL	DRAWING NO. 352A
		SHEET 1 OF 2
	AIR RELEASE VALVE BOX ADJUSTMENT	DATE 1/2021

GENERAL ADJUSTMENT NOTES:

1. REFER TO HRSD STD. DETAIL #351 FOR TYPICAL AIR VENT VALVE BOX CONSTRUCTION.
2. REFER TO HRSD STD. DETAIL #354 FOR AIR VENT VALVE BOX CASTING LID AND FRAME (IF CASTING ON SITE IS NOT AS SHOWN IN DETAIL #354, NOTIFY HRSD ENGINEER).
3. TOP OF VALVE'S BRONZE PLUG SHALL BE NO CLOSER TO BOTTOM OF FRAME THAN TWO (2") INCHES NOR FARTHER THAN SIX (6") INCHES.
4. BED CAST IRON FRAME SOUNDLY IN MORTAR GROUT.
5. PARGE ENTIRE VALVE BOX (INSIDE & OUT) WITH GROUT.

LOWERING TO GRADE:

6. EXCAVATE TO CORPORATION STOP AND CLOSE IT.
7. REMOVE AND REPLACE BALL VALVE AND RISER PIPE.
8. OPEN CORPORATION STOP 100%. MODIFY/RECONSTRUCT BOX AS REQUIRED.

RAISING OF GRADE:

9. WHEN ADJUSTMENT "A" DOES NOT VIOLATE NOTE #3, ABOVE, CASTING MAY BE LIFTED BY REMOVING EXISTING MORTAR BED AND ADDING COURSES OF HARD, SOUND, COMMON BRICK OR CONCRETE ELEVATION RINGS.
10. WHEN ADJUSTMENT "A" VIOLATES NOTE #3, FOLLOW STEPS 6–8 ABOVE.

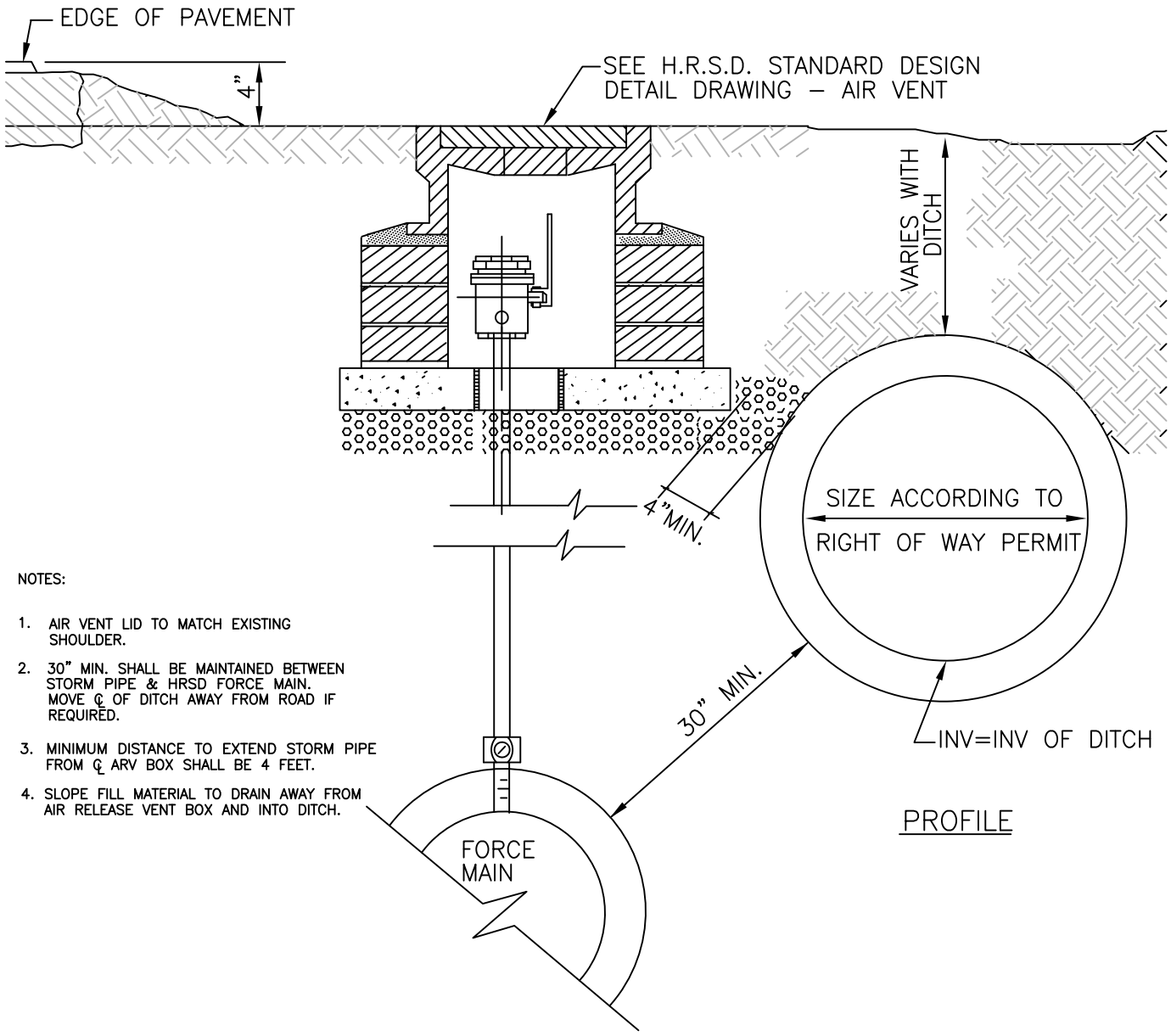

NOTES:

1. AIR VENT LID TO MATCH EXISTING SHOULDER.
2. 30" MIN. SHALL BE MAINTAINED BETWEEN STORM PIPE & HRSD FORCE MAIN. MOVE ℄ OF DITCH AWAY FROM ROAD IF REQUIRED.
3. MINIMUM DISTANCE TO EXTEND STORM PIPE FROM ℄ ARV BOX SHALL BE 4 FEET.
4. SLOPE FILL MATERIAL TO DRAIN AWAY FROM AIR RELEASE VENT BOX AND INTO DITCH.

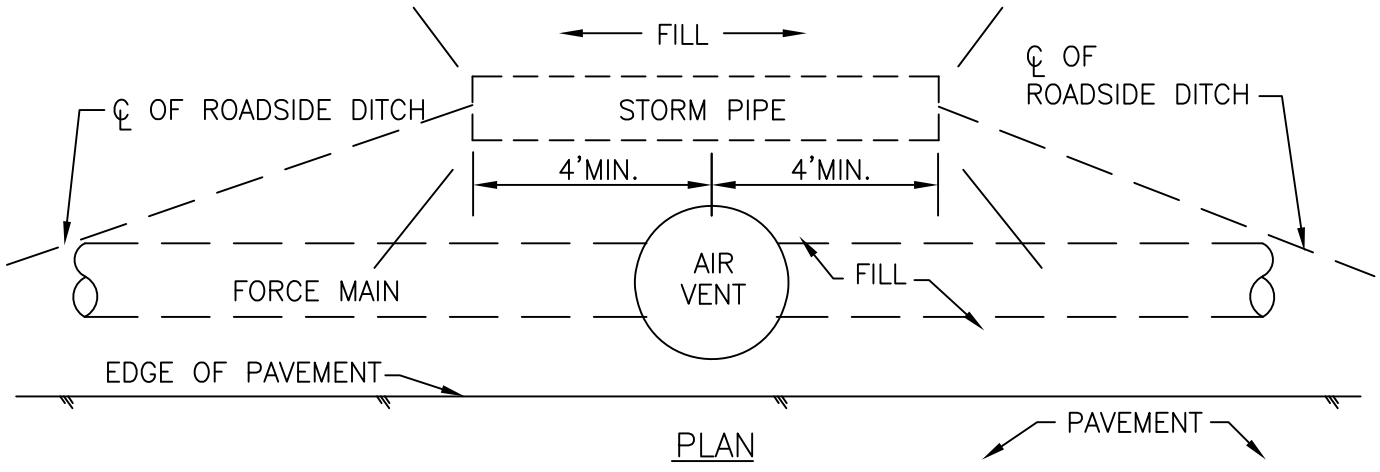

PLAN

NOT TO SCALE

HRSD	STANDARD DESIGN DETAIL	DRAWING NO. 353
		SHEET 1 OF 1
	ROADSIDE DITCH–AIR VENT	DATE 1/2021

NOTES

1. MACHINE ALL SEATING SURFACES ON BOTH COVER & FRAME

2. TOLERANCE TO BE ±0.125" FOR ALL DIMENSIONS.

3. CASTING TO BE SHOT BLASTED.

4. CASTING TO BE ASTM A-48 CLASS 30.

5. MINIMUM WEIGHTS:
   FRAME- 114 LBS.
   COVER- 50 LBS.

6. JACK UP RINGS NOT ACCEPTABLE.

7. SEE MASTER SPEC SECTION 01340 FOR AMERICAN IRON AND STEEL REQUIREMENT.

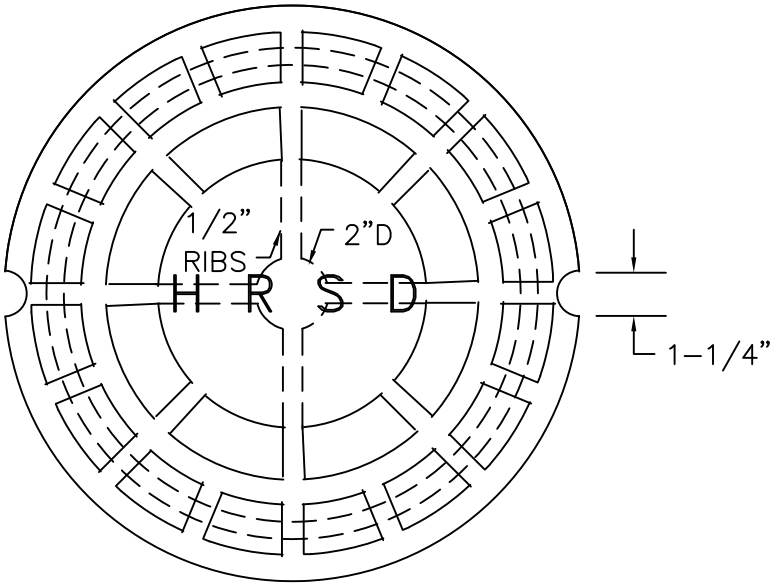

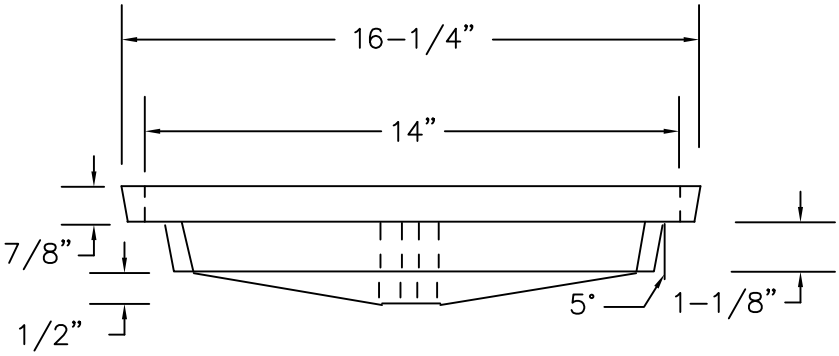

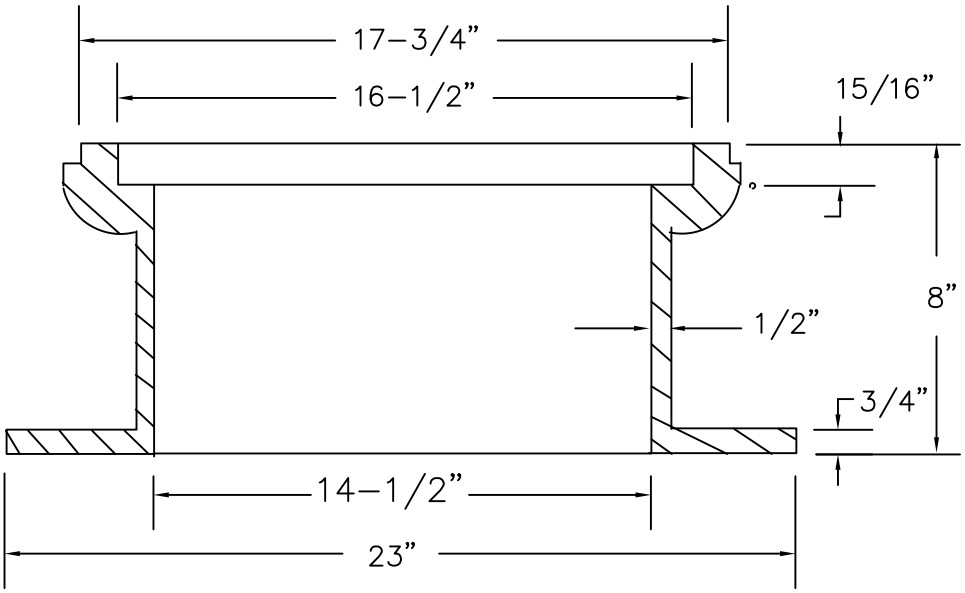

NOT TO SCALE

HRSD	STANDARD DESIGN DETAIL	DRAWING NO. 354
		SHEET 1 OF 1
	AIR VENT FRAME & COVER	DATE 1/2021

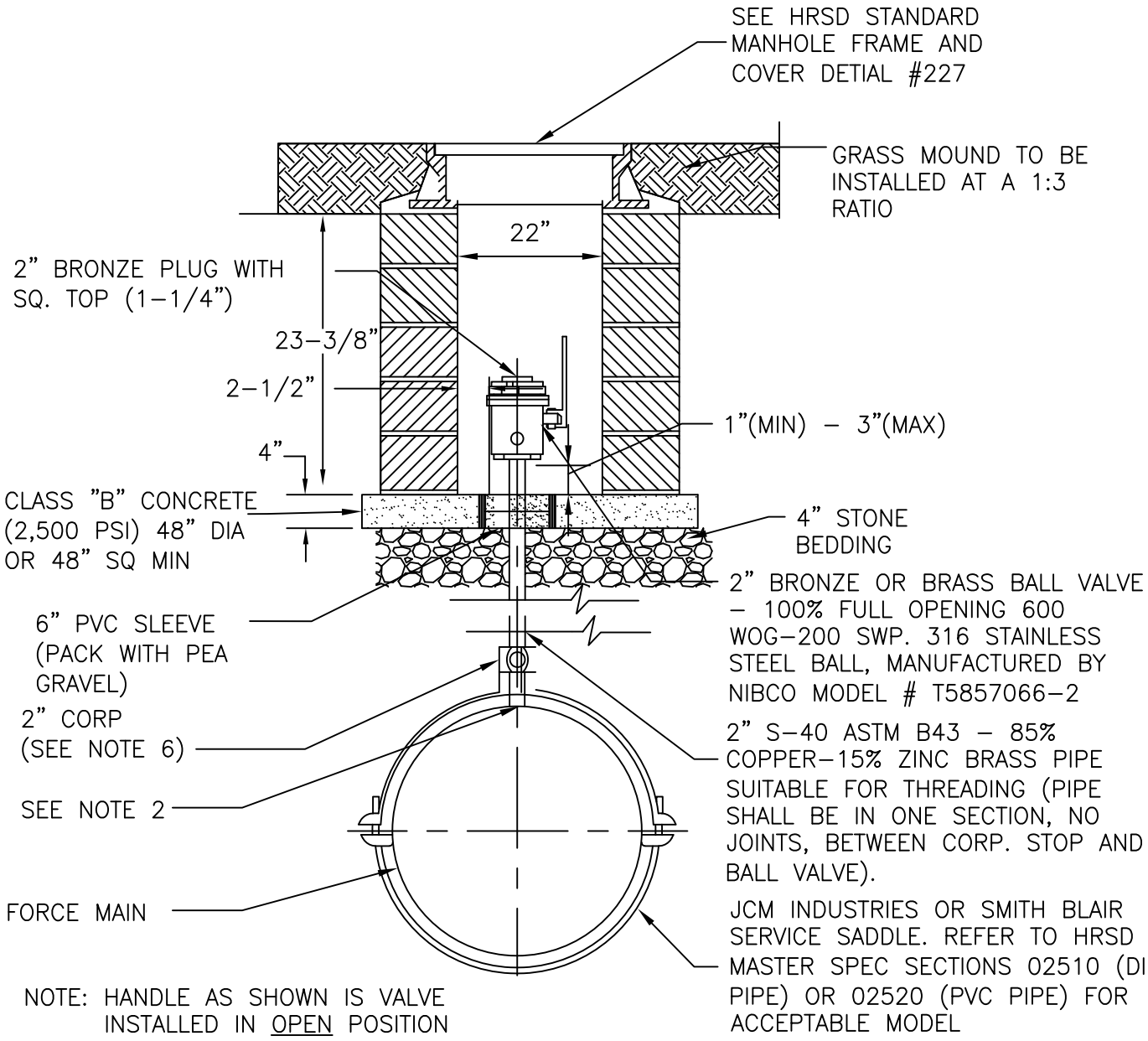

NOTES:

1. CONSTRUCT AIR VENT USING REQUIRED NUMBER OF COURSES OF HARD SOUND COMMON BRICK LAID ON EDGE OR CONCRETE ELEVATION RINGS AS MANUFACTURED BY NANSEMOND PRE-CAST CONCRETE CO, INC. MODEL AV-ER-CH AND AV-BS.
2. 2" TAP FOR AIR VENT SHALL BE STANDARD SADDLE TAP.
3. SERVICE SADDLE COATING SHALL BE FUSION BONDED EPOXY. SADDLE STRAPS AND HARDWARE SHALL BE STAINLESS STEEL. STAINLESS STEEL SHALL BE MINIMUM 304.
4. JACK UP RINGS BETWEEN THE FRAME AND COVER NOT ACCEPTABLE.
5. PARGE BRICK WORK OR CONCRETE ELEVATION RINGS WITH GROUT INSIDE AND OUT, CONTINUE ONTO CASTING.
6. MUELLER CATALOG #H10045N IS PREFERRED. REFER TO SPECIFICATION SECTION 02610 FOR ALLOWABLE ALTERNATIVES IF THE CONTRACTOR HAS DEMONSTRATED THE PREFERRED MODEL IS NOT AVAILABLE.

NOT TO SCALE

HRSD	STANDARD DESIGN DETAIL	DRAWING NO. 355
	STANDARD AIR VENT DETAIL FOR FUTURE AUTOMATIC AIR RELEASE VALVES	SHEET 1 OF 1
		DATE 1/2023

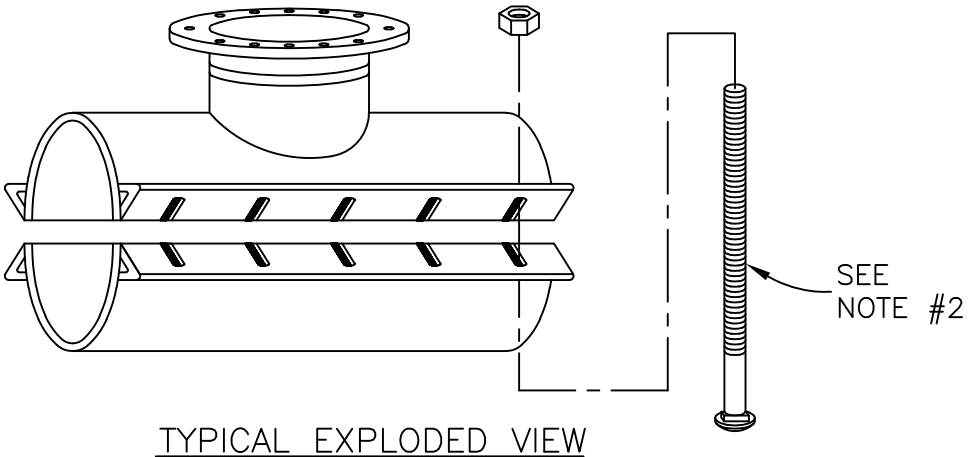

TYPICAL EXPLODED VIEW
SEE NOTE #1

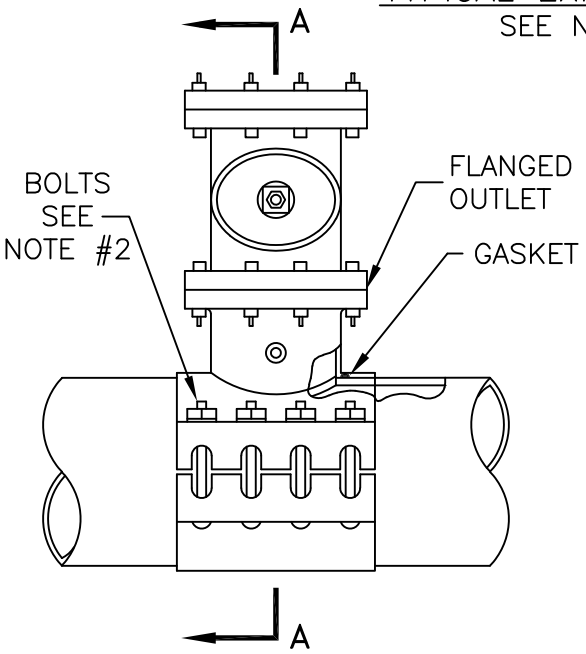

TOP VIEW

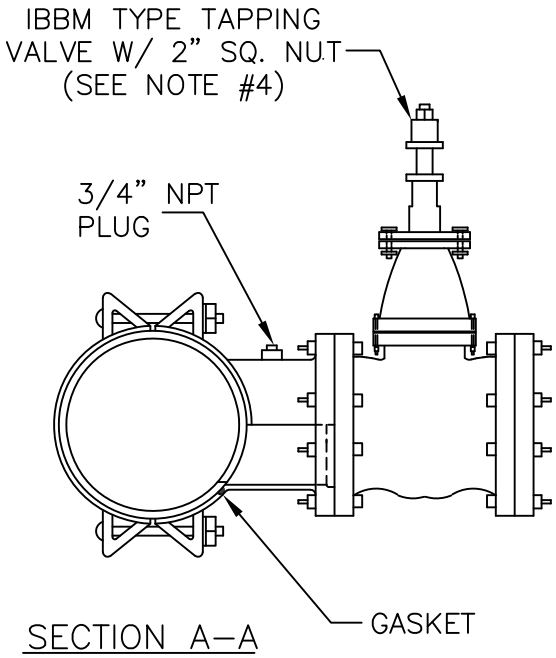

SECTION A–A

NOTES:

1. FULL BACK SADDLES ONLY, EXCEPT IN ACCORDANCE WITH PIPE MANUFACTURER'S RECOMMENDATIONS FOR SP–5 AND SP–12 (SEE H.R.S.D. STANDARD DESIGN DETAIL #377 – TAPPING SADDLE FOR CONC. CYLINDER PIPE).
2. THE NUMBER, SPACING, SIZE AND INSTALLATION OF BOLTS SHALL BE IN ACCORDANCE WITH SADDLE MANUFACTURER'S RECOMMENDATIONS.
3. CONTRACTOR SHALL SUPPLY TO HAMPTON ROADS SANITATION DISTRICT SYSTEMS ENGINEER THREE (3) CLEAR COPIES OF TAPPING SADDLE MANUFACTURER'S CATALOG CUT AND INSTALLATION INSTRUCTIONS 14 DAYS PRIOR TO INSTALLATION OF SADDLE.
4. TAPPING VALVE TO MEET ANSI/AWWA STANDARDS C500, C509 OR C515.
5. ALL BOLTS, NUTS AND WASHERS SHALL BE STAINLESS STEEL.
6. SADDLE COATING SHALL BE FUSION BONDED EPOXY.
7. TAPPING SADDLE MANUFACTURER SHALL BE SMITH–BLAIR STYLE 622 OR HRSD APPROVED EQUAL.

NOT TO SCALE

HRSD	STANDARD DESIGN DETAIL	DRAWING NO. 376
	TAPPING SADDLE FOR CAST IRON PIPE, DUCTILE IRON, RC, & PVC PIPE	SHEET 1 OF 1
		DATE 1/2021

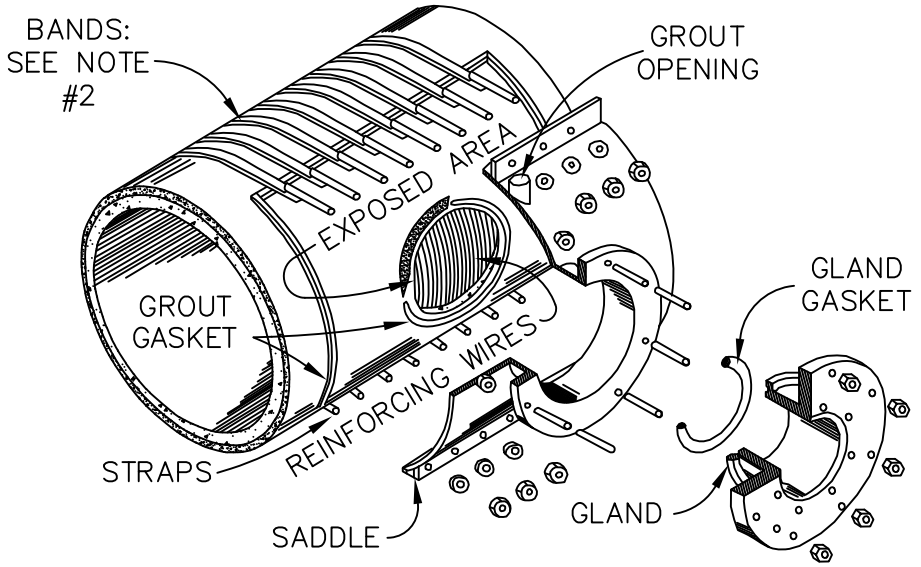

TYPICAL EXPLODED VIEW
SEE NOTE #1

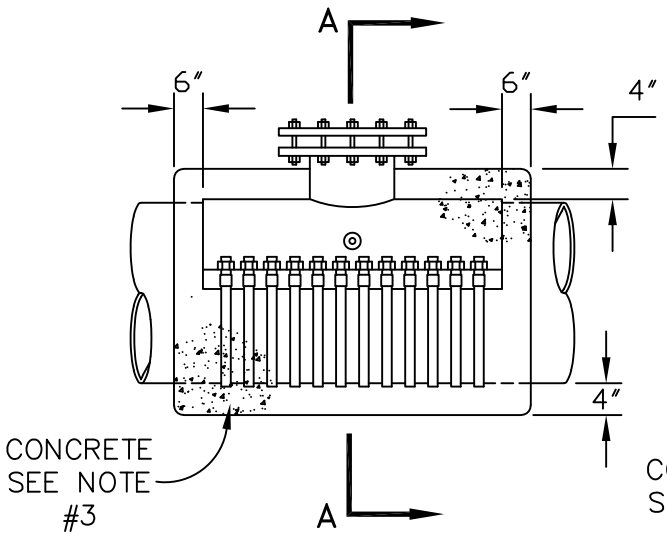

TOP VIEW

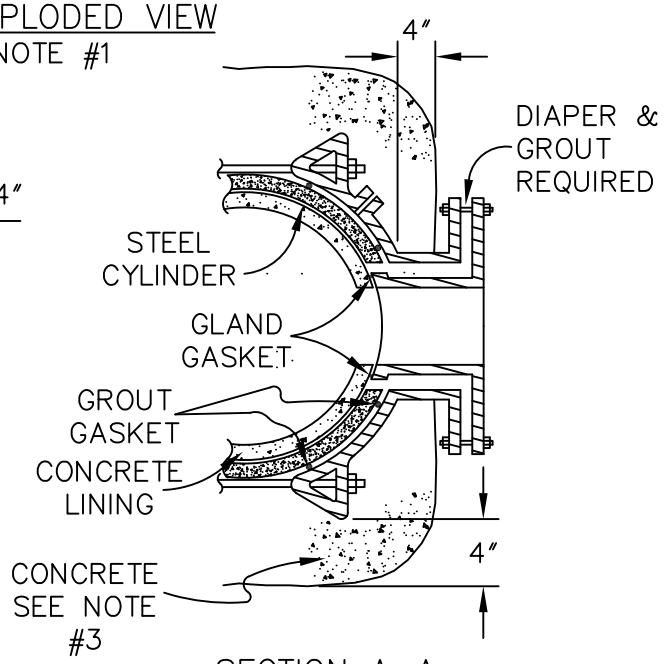

SECTION A–A

NOTES:

1. BANDED TAPPING SADDLES ONLY ACCEPTED ON SP–5 & SP–12 PIPE PER PIPE MANUFACTURER'S RECOMMENDATIONS (SEE STANDARD DESIGN DETAIL #12 – STANDARD TAPPING SADDLE FOR CAST IRON PIPE, DUCTILE IRON, RC, & PVC PIPE).
2. THE NUMBER, SPACING, SIZE AND INSTALLATION OF BANDS SHALL BE IN ACCORDANCE WITH SADDLE MANUFACTURER'S RECOMMENDATIONS.
3. ALL TAPPING SADDLES SHALL RECEIVE 4", 3000 PSI CONCRETE COVER WITH 6"x6"x6" GAUGE WELDED WIRE REINFORCEMENT.
4. CONTRACTOR SHALL SUPPLY TO HAMPTON ROADS SANITATION DISTRICT SYSTEMS ENGINEER THREE (3) CLEAR COPIES OF TAPPING SADDLE MANUFACTURER'S CATALOG CUT AND INSTALLATION INSTRUCTIONS 14 DAYS PRIOR TO INSTALLATION OF SADDLE.
5. TAPPING SADDLE MANUFACTURER SHALL BE SMITH–BLAIR STYLE 625 OR JCM INDUSTRIES STYLE 415.

NOT TO SCALE

HRSD	STANDARD DESIGN DETAIL	DRAWING NO. 377
		SHEET 1 OF 1
	TAPPING SADDLE FOR CONCRETE CYLINDER PIPE	DATE 1/2023

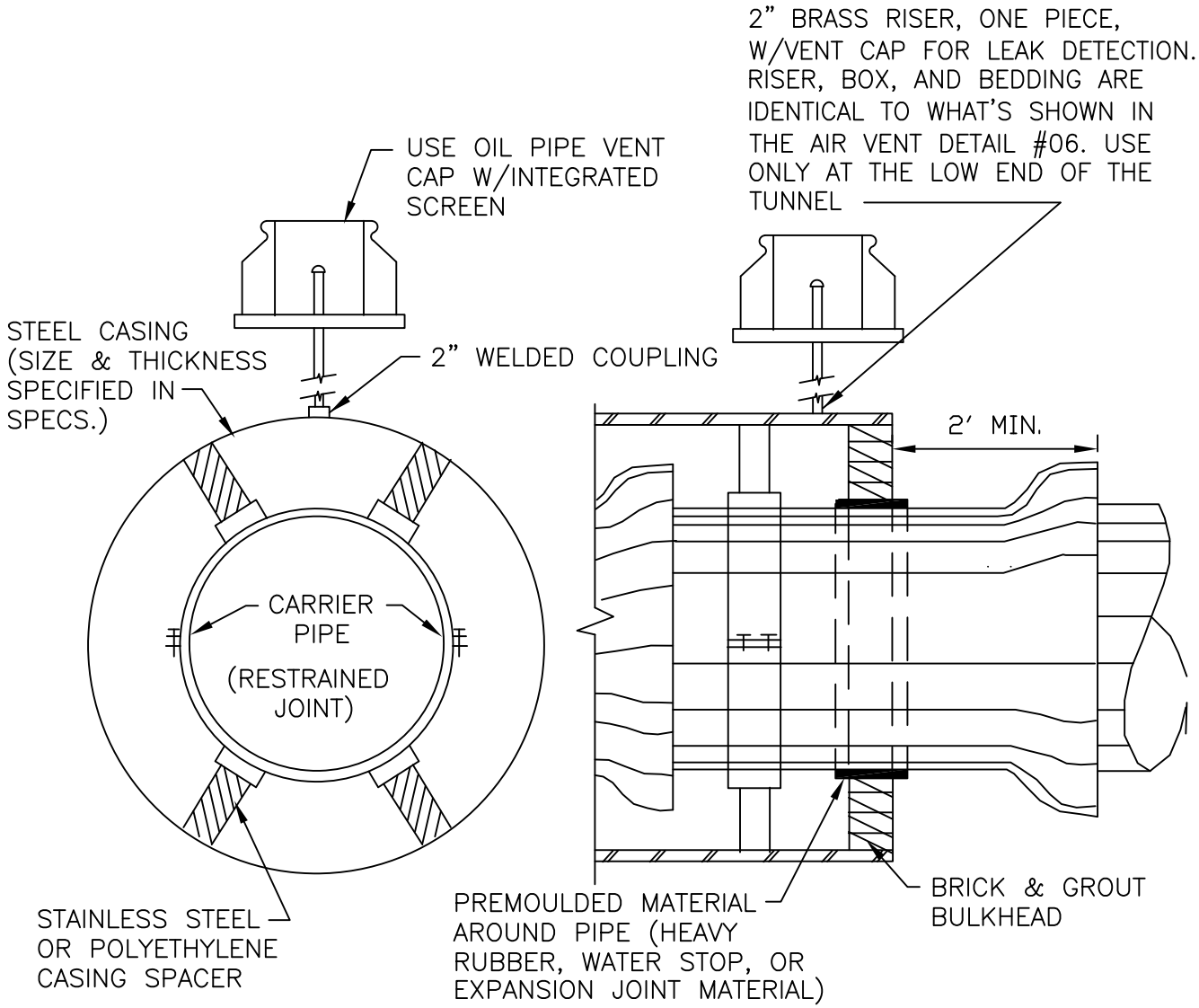

END ELEVATION

PARTIAL SECTION

NOTE: INSTALL CASING PIPE AS SHOWN ON DRAWINGS OR MIN. 4' BEYOND EDGE OF PAVEMENT.

NOT TO SCALE

HRSD	STANDARD DESIGN DETAIL	DRAWING NO. 378A
		SHEET 1 OF 2
	STEEL CASING PIPE DETAIL	DATE 1/2021

NOTES:

A. STAINLESS STEEL SPACERS

SPACERS SHALL BE BOLT ON STYLE WITH A TWO PIECE SHELL MADE FROM T-304 STAINLESS STEEL OF A MINIMUM 14 GAUGE THICKNESS. THE SHELL SHALL BE LINED WITH A RIBBED P.V.C. SHEET OF A 0.090" THICKNESS THAT OVERLAPS THE EDGES. RUNNERS MADE FROM UHMW POLYMER, SHALL BE ATTACHED TO RISERS AT APPROPRIATE POSITIONS TO PROPERLY LOCATE THE CARRIER WITHIN THE CASING AND TO EASE INSTALLATION. RISERS TO BE MADE FROM T-304 STAINLESS STEEL OF A MINIMUM 14 GAUGE THICKNESS AND SHALL BE ATTACHED TO THE SHELL BY MIG WELDING. ALL WELDS SHALL BE FULLY PASSIVATED. ALL FASTENERS SHALL BE MADE FROM T-304 STAINLESS STEEL CASING SPACERS SHALL BE MODEL CCS AS MANUFACTURED BY CASCADE WATERWORKS MANUFRACTURING COMPANY OF YORKVILLE, IL. OR APPROVED EQUAL.

B. HIGH DENSITY POLYETHYLENE

SPACERS SHALL BE PROJECTION TYPE, TOTALLY NON-METALLIC CONSTRUCTED OF PREFORMED SECTIONS OF HIGH-DENSITY POLYETHYLENE AND ISO 9002 CERTIFIED FOR STRENGTH AND QUALITY. SPACERS SHALL PROVIDE SUPPORT AROUND THE PERIPHERY OF THE PIPE. THE MINIMUM NUMBER OF PROJECTIONS AROUND THE CIRCUMFERENCE SHALL TOTAL THE NUMBER OF PIPE DIAMETER INCHES. SPACERS SHALL USE DOUBLE BACK TAPE TO FASTEN TIGHTLY ONTO THE CARRIER PIPE. SPACER SPAN SHALL BE IN ACCORDANCE WITH THE MANUFACTURER'S RECOMMENDATIONS TO PREVENT SAGGING OF THE PIPE. THE MAXIMUM LOAD SHALL NOT EXCEED MANUFACTURER'S RECOMMENDATIONS. SPACERS SHALL HAVE MINIMUM HEIGHT THAT CLEARS THE PIPE BELL OR AS OTHERWISE INDICATED ON THE PLANS. SPACERS SHALL BE MANUFACTURED BY RACI SPACERS NORTH AMERICA INC. OR APPROVED EQUAL.

C. SPACER WIDTH AND PLACEMENT INTERVALS

IN ALL INSTANCES SPACER SHOULD BE PLACED SO AS TO SUPPORT THE CARRIER WITHIN 2' OF THE ENDS OF THE PIPE. CONSULT PIPE MANUFACTURER FOR RECOMMENDATIONS ON SPACER WIDTH AND ADDITIONAL PLACEMENT INTERVALS.

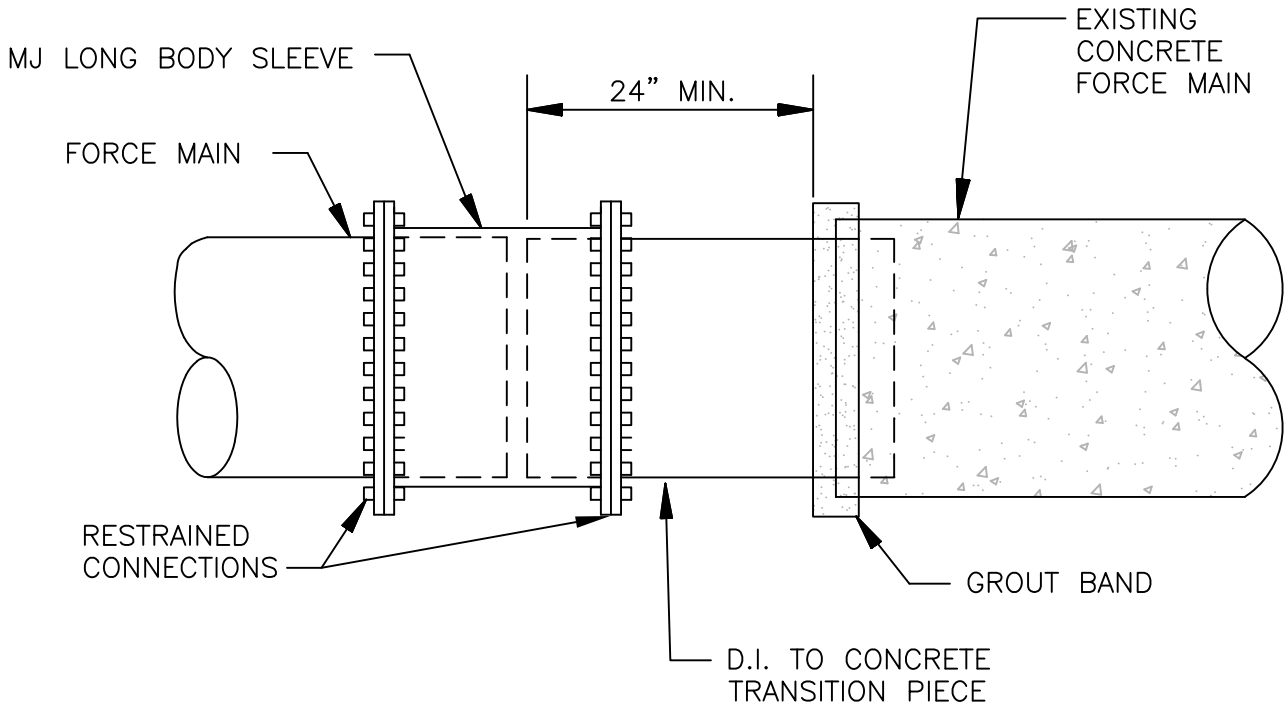

A	B	M.J.S. O.D.
16"	30.0"	17.4"
18"	30.0"	19.5"
20"	30.0"	21.6"
24"	30.0"	25.8"
30"	30.0"	32.0"
36"	30.0"	38.3"
42"	30.0"	44.5"
48"	30.0"	50.8"

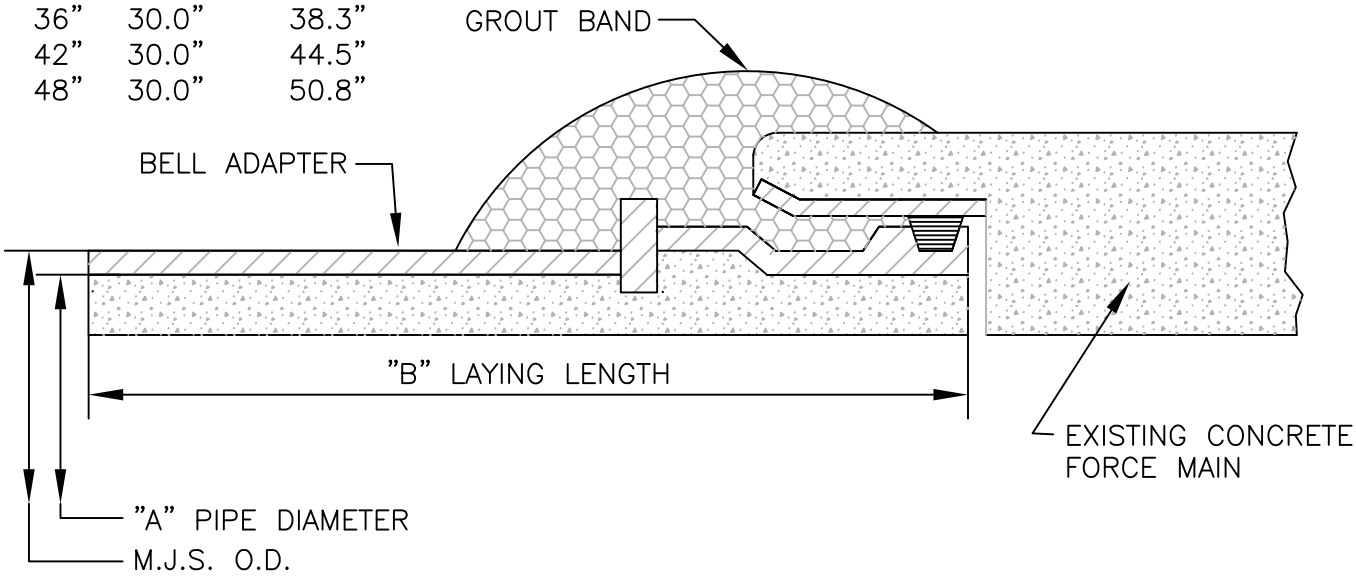

NOT TO SCALE

HRSD	STANDARD DESIGN DETAIL	DRAWING NO. 379
		SHEET 1 OF 1
	D.I. M.J. SPIGOT TO CONCRETE TRANSITION ADAPTER (MALE)	DATE 1/2021

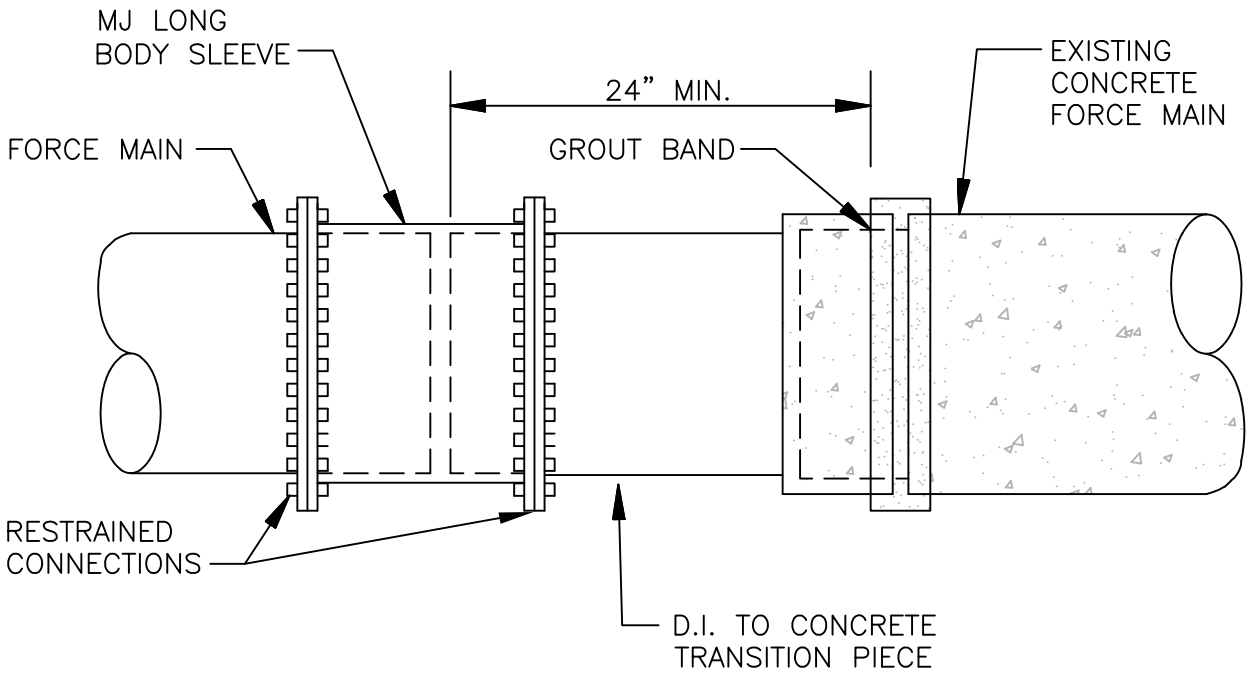

A	B	M.J.S. O.D.
16"	25.5"	17.4"
18"	25.5"	19.5"
20"	25.5"	21.6"
24"	25.5"	25.8"
30"	25.5"	32.0"
36"	25.5"	38.3"
42"	25.5"	44.5"
48"	25.5"	50.8"

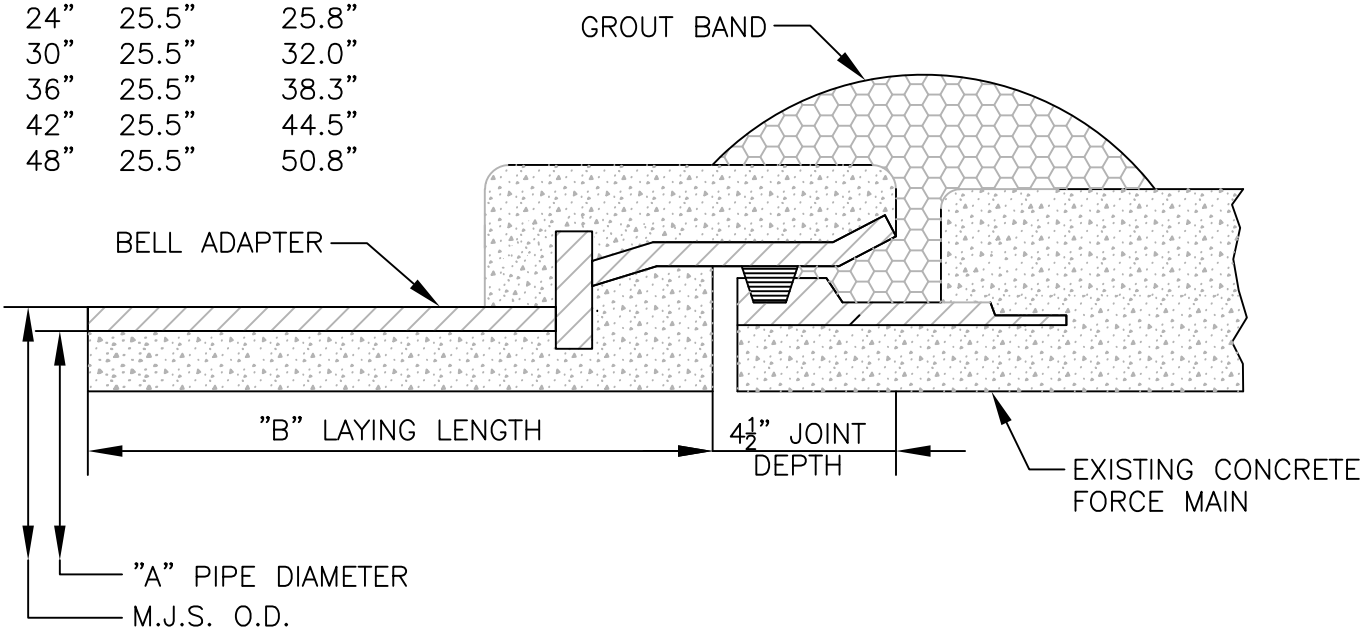

NOT TO SCALE

HRSD	STANDARD DESIGN DETAIL	DRAWING NO. 380
		SHEET 1 OF 1
	D.I. M.J. SPIGOT TO CONCRETE TRANSITION ADAPTER (FEMALE)	DATE 1/2021

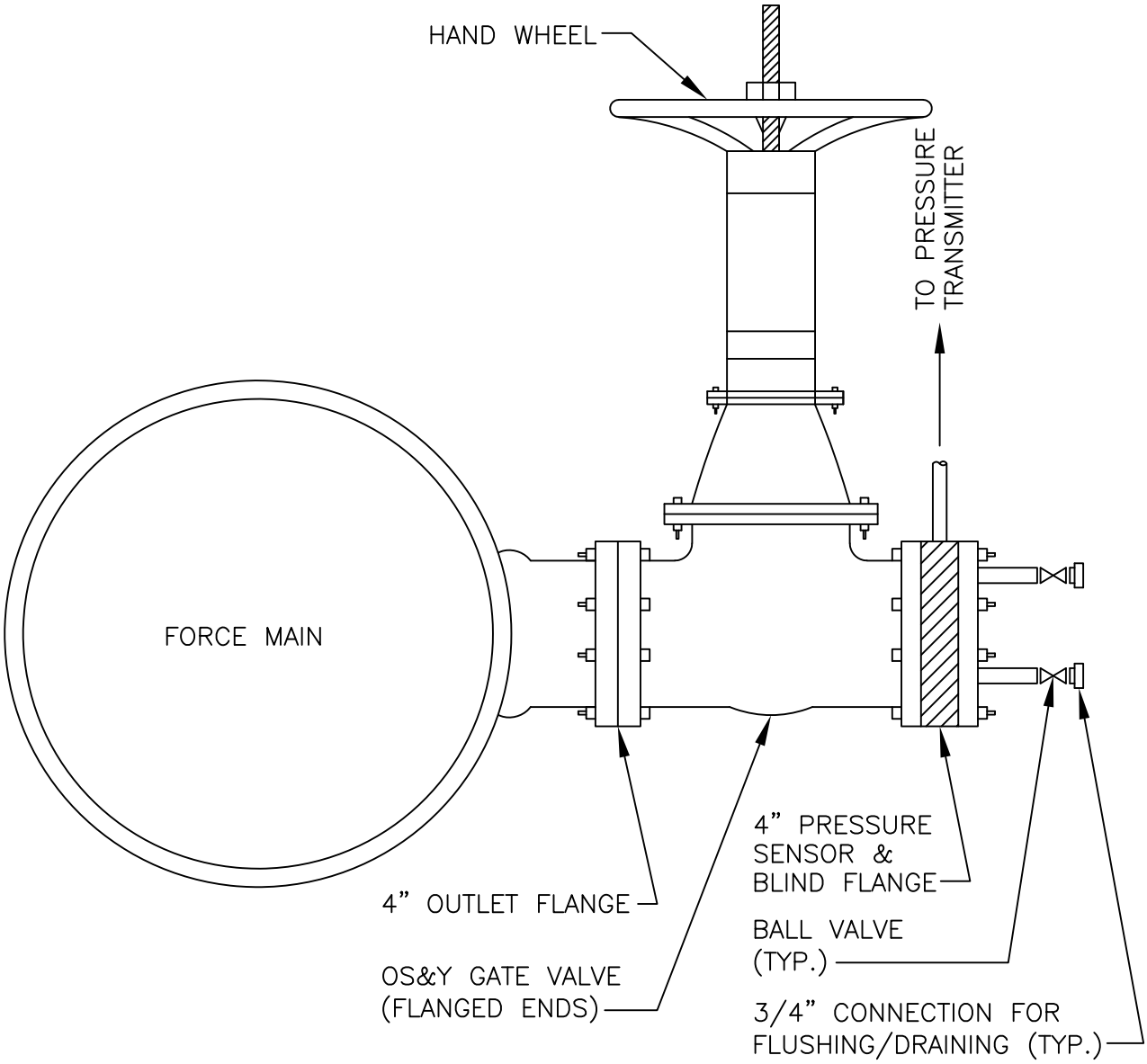

NOTES:

1. THE CENTERLINE OF THE 4" OUTLET FLANGE SHALL BE LOCATED AT THE 3 O'CLOCK POSITION.

NOT TO SCALE

HRSD	STANDARD DESIGN DETAIL	DRAWING NO. 381
		SHEET 1 OF 1
	PRESSURE SENSOR INSTALLATION	DATE 1/2021

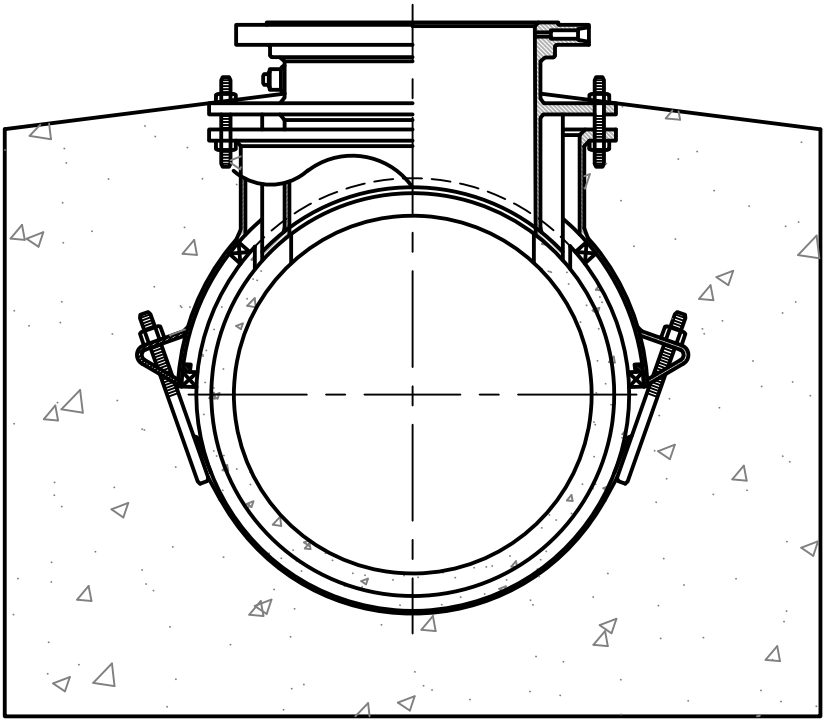

NOT TO SCALE

HRSD	STANDARD DESIGN DETAIL	DRAWING NO. 382
		SHEET 1 OF 1
	CONCRETE CYLINDER PIPE LINE STOP DETAIL	DATE 1/2021

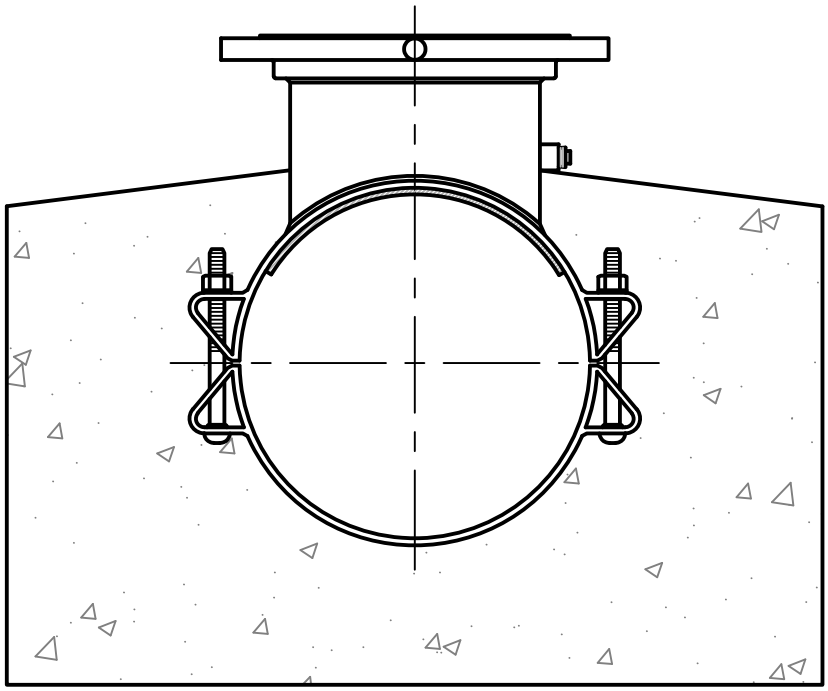

HRSD

STANDARD DESIGN DETAIL

DUCTILE/CAST IRON PIPE LINE STOP DETAIL

DRAWING NO.
383

SHEET
1 OF 1

DATE
1/2021

COMPONENTS

1. SUBMERSIBLE PUMP ASSEMBLY
2. FLG. PIPE
3. FLG. SLUDGE SHOE
4. ADJUSTABLE PIPE SUPPORT
5. BURIED GATE VALVE
6. FLG. GATE VALVE
7. FLG. x PLAIN END PIPE
8. GUIDE BAR (# AS REQ'D.)
9. FLG. 90° BEND
10. PIPE GUIDE AND RAIL BRACE (5'-0" MAX. VERTICAL SPACING)
11. VALVE VAULT DRAIN
12. VENT FAN ASSEMBLY
13. FLG. OW & L CHECK VALVE
14. FLG. TEE
15. FLG. BASE 90° BEND
16. HALLIDAY HATCH (TO BE SIZED BY HRSD)
17. BLIND FLANGE
18. FLG. PIPE SUPPORT
19. *WALL SLEEVE & DUAL LINK SEALS.
20. ADHESIVE ANCHORS (TYP)
21. 1" WATER SERVICE W/ VALVE
22. 3/4" RPZ BACKFLOW PREVENTER AND HOSE BIBB W/ VACUUM BREAKER
23. THRESHOLD
24. 316 SS WET WELL AIR INTAKE WITH BUG SCREEN
25. TRANSDUCER STILLING WELL
26. 1" ø TAP WITH 3" BRASS NIPPLE WITH BALL VALVE AND PLUG
27. DRAIN TO TERMINAL MANHOLE
28. HALLIDAY DEBRIS BASKET (SERIES B4B WITH STAINLESS STEEL RAIL SYSTEM)

*ANNULAR SPACE BETWEEN LINK SEALS TO BE FILLED WITH HYDROPHILIC GROUT.

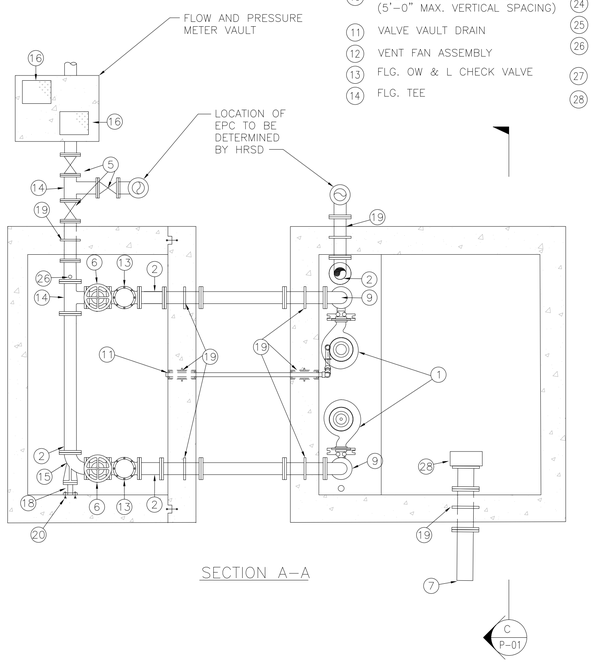

SECTION A–A

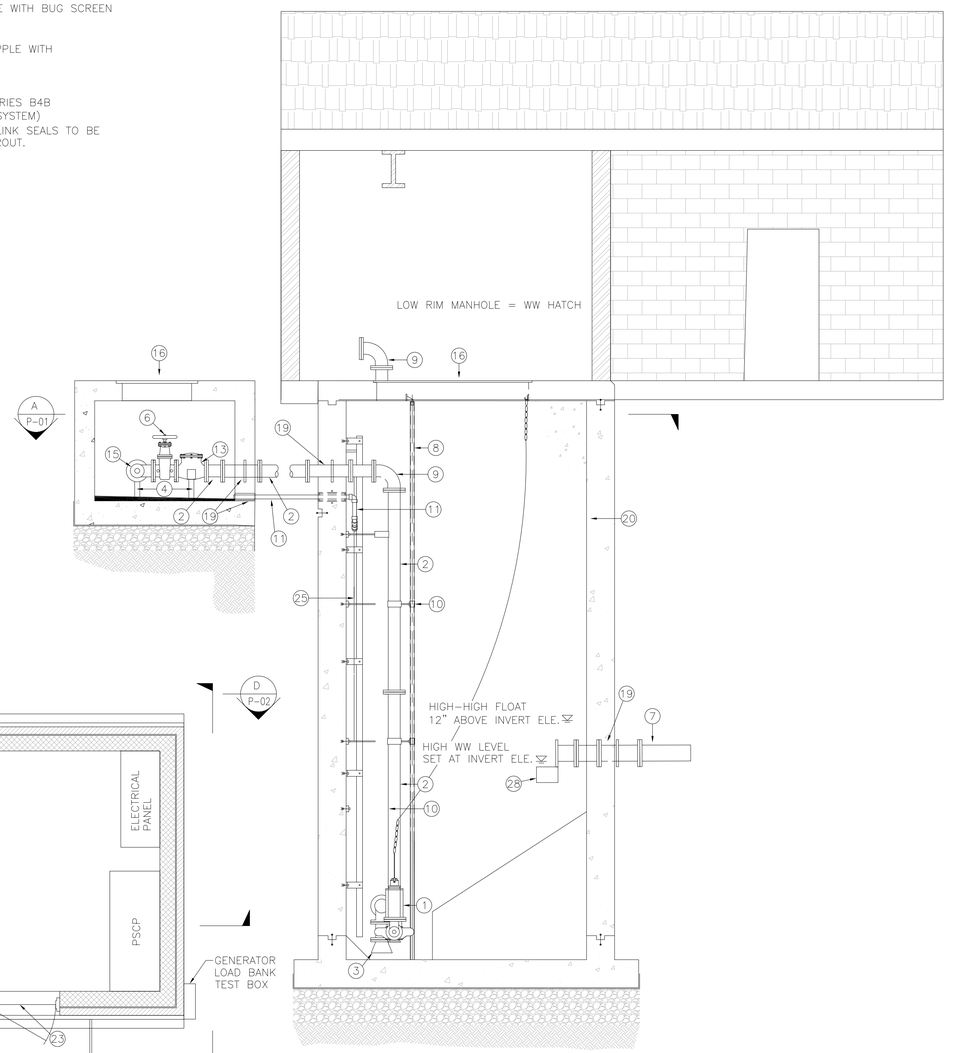

SECTION B–B

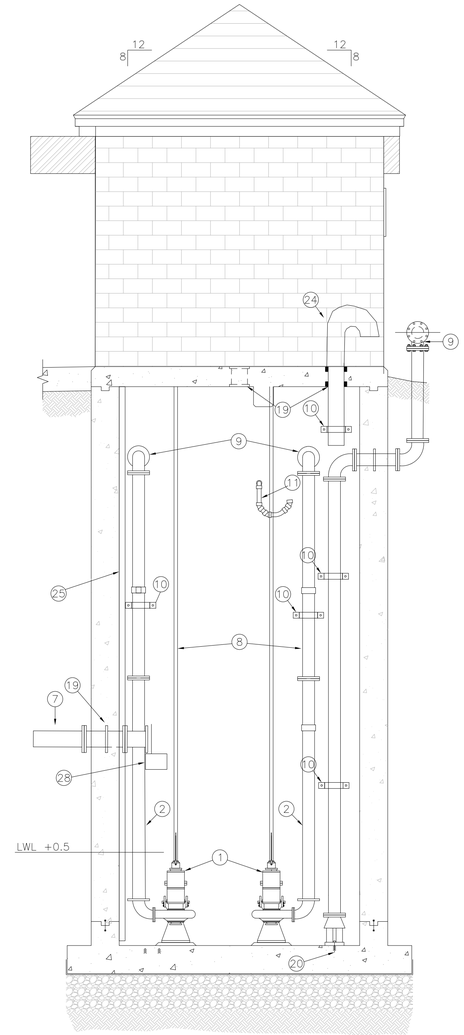

SECTION C–C

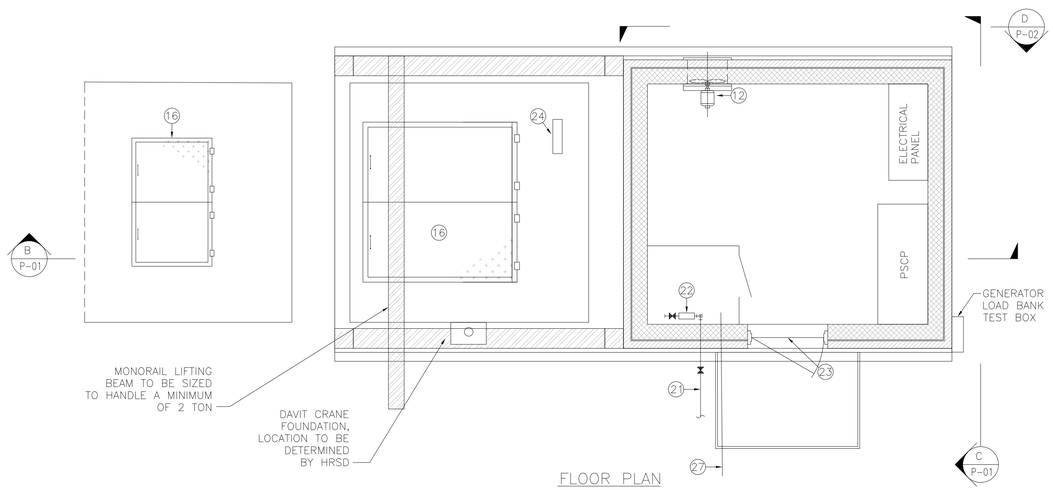

FLOOR PLAN

NOT TO SCALE

HRSD	SMALL COMMUNITIES SAMPLE DESIGN DETAIL	DRAWING NO. 400A
		SHEET 1 OF 2
	SUBMERSIBLE PUMP STATION	DATE 1/2021

NOTES

1. THE INFORMATION PROVIDED PRESENTS A GENERIC TEMPLATE OF THE SEWAGE PUMPING STATION TYPE THAT IS PREFERRED BY THE SMALL COMMUNITIES DIVISION OF HRSD. THE DEVELOPMENT OF A COMPLETE DESIGN AND DOCUMENTS FOR CONSTRUCTION OF A FACILITY, BASED UPON THIS TEMPLATE, SHALL BE TOTALLY THE RESPONSIBILITY OF THE PROFESSIONAL ENGINEER. THIS TEMPLATE IS NOT SUITABLE FOR ANY SPECIFIC CONSTRUCTION PURPOSE, SITE OR APPLICATION.
2. STRUCTURE AND COMPONENT SIZES WILL VARY IN ACCORDANCE WITH THE DESIGN PARAMETERS THAT ARE SPECIFIC TO EACH FACILITY
3. REFER TO THE HRSD STANDARDS FOR DETAILED COMPONENT DESCRIPTIONS.
4. REFER TO THE HRSD STANDARDS APPROVED PRODUCTS LIST FOR ACCEPTABLE MANUFACTURES AND PRODUCTS.
5. PUMP STATION WILL BE REQUIRED TO GENERALLY CONSIST OF CONCRETE WETWELL, CONCRETE VALVE VAULT, CONCRETE METER VAULT, AND CMU AND BRICK STRUCTURE TO HOUSE MOTOR CONTROLS, POWER AND WATER CLOSET.
6. ALL PIPE MATERIAL SHALL BE C900 PIPE UNLESS OTHERWISE STATED. ALL HARDWARE SHALL BE 316 SS UNLESS OTHERWISE STATED.
7. REVIEW AND APPROVAL OF ARCHITECTURAL DESIGN ELEMENTS MUST GO THROUGH HRSD REVIEW BOARD
8. PUMP STATION SHALL HAVE STAND BY GENERATOR AND HRSD SHALL BE SUPPLIED A SPARE PUMP

IN ACCORDANCE WITH CHAPTER 10, SECTION 1008.1.4 OF THE 2003 EDITION OF THE IBC, THERE SHALL BE A FLOOR OR LANDING ON EACH SIDE OF THE DOOR. SUCH FLOOR OR LANDING SHALL BE AT THE SAME ELEVATION ON EACH SIDE OF THE DOOR. LANDINGS SHALL BE LEVEL EXCEPT FOR EXTERIOR LANDINGS, WHICH ARE PERMITTED TO HAVE A SLOPE NOT TO EXCEED 0.25 UNIT VERTICAL IN 12 UNITS HORIZONTAL (2 PERCENT SLOPE).

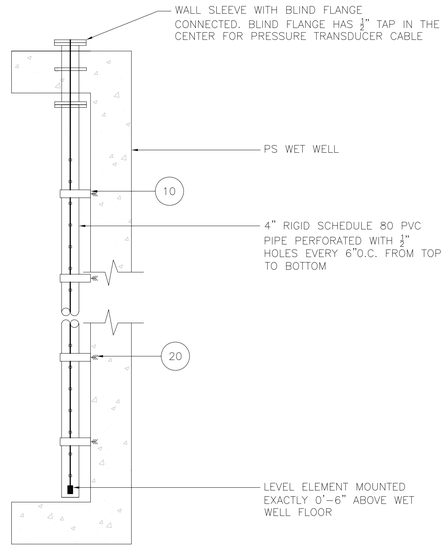

STILLING WELL DETAIL

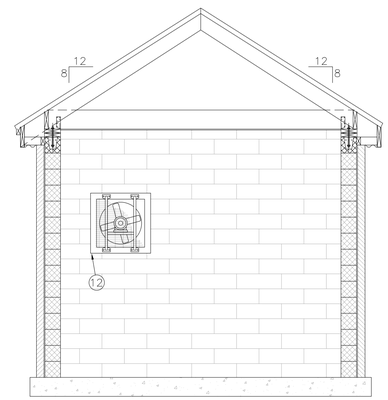

SECTION D-D

NOT TO SCALE

HRSD	SMALL COMMUNITIES SAMPLE DESIGN DETAIL	DRAWING NO. 400B
		SHEET 2 OF 2
	SUBMERSIBLE PUMP STATION	DATE 1/2021

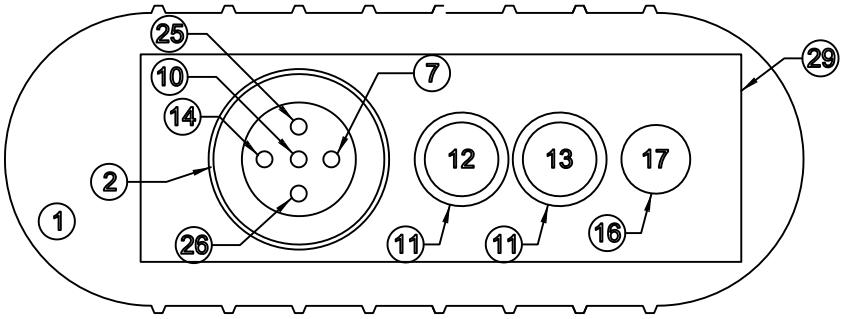

TOP VIEW WITH NO EQUIPMENT REMOVED

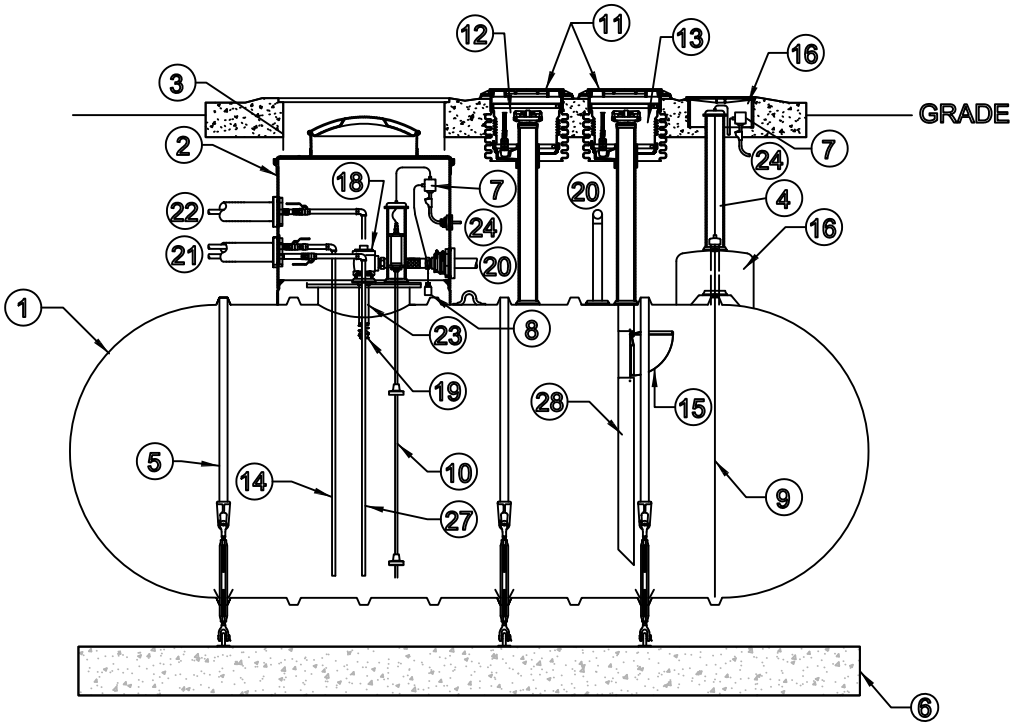

HRSD	STANDARD DESIGN DETAIL	DRAWING NO. 401A
		SHEET 1 OF 2
	UNDERGROUND STORAGE TANK	DATE 1/2021

DIESEL FUEL DOUBLE WALL STORAGE TANK	
NO.	DESCRIPTION
1	DOUBLE WALL FIBERGLASS STORAGE TANK
2	42" FIBERGLASS ATTACHED MANWAY
3	42" WATERTIGHT FIBERGLASS ATTACHED MANWAY EXTENSION
4	MONITORING WELL
5	FIBERGLASS HOLD DOWN STRAP W/ TURNBUCKLE ASSEMBLY (TYPICAL)
6	CAST IN PLACE CONCRETE SLAB
7	TANK MONITORING SYSTEM PROBE
8	DISTINGUISHING LEAK SENSOR
9	NONDISTINGUISHING LEAK SENSOR
10	LEVEL PROBE
11	FIVE GALLON SPILL FILL MANHOLE
12	VAPOR RECOVERY CONNECTION
13	TANK FILL CONNECTION
14	FUEL OIL SUPPLY DROP TUBE
15	OVERFILL PREVENTION VALVE
16	MONITORING MANHOLE
17	SECONDARY TANK OPENING FOR LEAK SENSOR
18	EXTRACTOR ASSEMBLY WITH FOOT VALVE
19	BALL FLOAT
20	2" DOUBLE WALL VENT PIPING
21	DOUBLE WALL PRODUCT SUPPLY PIPING
22	DOUBLE WALL PRODUCT RETURN PIPING
23	FUEL OIL RETURN DROP TUBE
24	WIRING CONNECTION IN CONDUIT
25	FUEL OIL RETURN CONNECTION
26	SECONDARY FUEL SUPPLY CONNECTION
27	FUEL OIL SUPPLY DROP TUBE
28	TANK FILL DROP TUBE
29	CONCRETE APRON

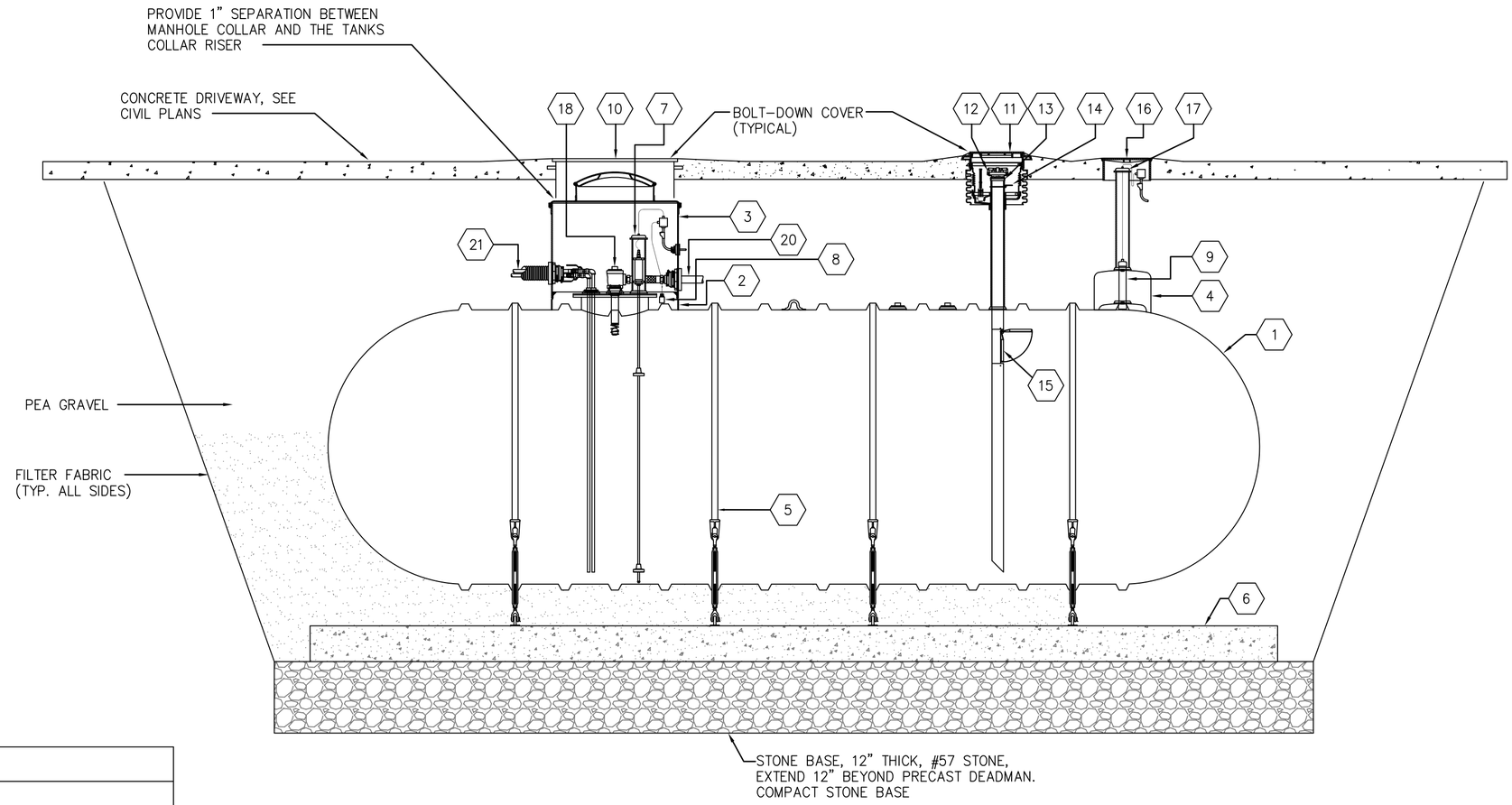

UNDERGROUND FUEL TANK INSTALLATION DETAIL

PARTS LIST

NO.	DESCRIPTION
1	DOUBLE WALL FIBERGLASS STORAGE TANK (1,000 GALLONS)
2	42" FIBERGLASS ATTACHED COLLAR
3	42" WATERTIGHT FIBERGLASS ATTACHED COLLAR RISER
4	INTERSTITIAL FUEL LEAK MONITORING SYSTEM
5	FIBERGLASS HOLD DOWN STRAP W/ TURNBUCKLE ASSEMBLY
6	PRECAST CONCRETE ANCHOR BY TANK MANUFACTURER
7	LEVEL PROBE
8	NON-DESCRIMINATING TYPE LEAK SENSOR
9	DRY INTERSTITIAL DISCRIMINATING TYPE LEAK SENSOR
10	LARGE ROUND MANHOLE W/H20 RATED BOLT-DOWN COVER
11	5-GAL SPILL/FILL MANHOLE W/H20 RATED BOLT-DOWN COVER
12	FILL CAP
13	FILL ADAPTER
14	PRODUCT LABEL MARKER
15	OVERFILL PREVENTION VALVE
16	MONITORING MANHOLE W/H20 RATED BOLT-DOWN COVER
17	4" SENSOR CAP
18	EXTRACTOR ASSEMBLY
19	NOT USED
20	SINGLE WALL FIBERGLASS VENT PIPING
21	DOUBLE WALL FLEXIBLE FUEL SUPPLY/RETURN PIPING

HRSD

STANDARD DESIGN DETAIL

UNDERGROUND FUEL TANK

DRAWING NO. 402A

SHEET 1 OF 2

DATE 1/2021

UNDERGROUND FUEL TANK STANDARD

THE CONTRACTOR INSTALLING THE TANK AND ACCESSORIES, FUEL MONITORING SYSTEM AND PIPING SHALL BE CERTIFIED BY EACH MANUFACTURER TO INSTALL THE EQUIPMENT. THE INSTALLED SYSTEM AND PARTS SHALL BE WARRANTED FOR A PERIOD OF FIVE YEARS FROM DATE OF FINAL ACCEPTANCE AGAINST DEFECTIVE MATERIALS, DESIGNS AND WORKMANSHIP. THE WARRANTY SHALL BE PROVIDED TO HRSD. THE TANK AND ALL ASSOCIATED EQUIPMENT SHALL BE INSTALLED AND TESTED IN ACCORDANCE WITH THE LATEST NATIONAL, STATE AND LOCAL CODES AND MANUFACTURERS REQUIREMENTS.

FUEL TANK

1. 1,000 GALLON FIBERGLASS DOUBLE WALL (DRY TYPE) UNDERGROUND STORAGE FUEL TANK WITH A 30-YEAR WARRANTY AS MANUFACTURED BY XERXES CORPORATION.
2. NPT FITTINGS SHALL BE FURNISHED FOR THE INTERSTITIAL LEAK SENSOR, LEVEL PROBE AND MANWAY LEAK SENSOR TO ALLOW CONDUIT AND WIRING RUN TO THE TANK'S ATTACHED COLLAR RISER AND MONITORING MANWAY.
3. TANK SHALL BE BURIED A MINIMUM OF 48" FROM TOP OF DRIVEWAY TO TOP OF TANK.
4. BACKFILL SHALL BE PEA GRAVEL, SIZE AS REQUIRED BY THE TANK MANUFACTURER. PEA GRAVEL SHALL BE WRAPPED WITH FILTER FABRIC AS SHOWN ON THE TANK INSTALLATION DETAIL.
5. A FIBERGLASS 42" ATTACHED COLLAR AND COLLAR RISER SHALL BE PROVIDED AROUND THE MANWAY TO BRING IT UP TO FINISH GRADE. A 1" SEPARATION SHALL BE PROVIDED BETWEEN THE BOTTOM OF THE MANWAY AND TOP OF COLLAR RISER.
6. THE COLLAR RISER SHALL BE PROVIDED WITH A FLAT TOP AND A 30" OVAL WATERTIGHT COVER.
7. THE FIBERGLASS 42" ATTACHED COLLAR, COLLAR RISER AND COVER SHALL BE WATERTIGHT. THE FIBERGLASS COLLAR SYSTEM AND COVER SHALL BE INSPECTED AND TESTED.
8. NPT FITTINGS SHALL BE FURNISHED ON TOP OF THE TANK AND ATTACHED COLLAR RISER FOR SPILL/FILL BOX, EXTRACTOR ASSEMBLY, LEVEL PROBE, LEAK SENSOR, SUPPLY/RETURN FUEL LINES VENT PIPING AND SPARE.
9. A PRECAST CONCRETE ANCHOR PAD SHALL BE PROVIDED WITH THE TANK, SIZED AND FURNISHED BY THE TANK MANUFACTURER.
10. FIBERGLASS HOLD DOWN STRAPS WITH GALVANIZED TURN BUCKLES SHALL BE FURNISHED WITH THE CONCRETE ANCHOR PAD BY THE TANK MANUFACTURER.

PARTS AS MANUFACTURED BY OHIO PATTERN WORKS (OPW)

1. COMPOSITE BOLT-DOWN MANHOLE COVERS, 19" AND 44", H20 RATING, OPW CONQUISTADOR SERIES.
2. ADAPTORS AND CAPS.
3. OVERFILL PREVENTION VALVE.
4. 5-GALLON THREAD-ON SPILL CONTAINMENT MANHOLE WITH SPILL DRAIN.
5. TRANSITION ADAPTORS FROM UNDERGROUND PIPING TO ABOVE GROUND.
6. SUMP OR MANHOLE PENETRATION FITTINGS FOR CONDUIT, PIPING, ETC.
7. FLEXIBLE FUEL PIPING AND FITTINGS.
8. TRANSITION SUMP ASSEMBLY.

VEEDER-ROOT FUEL MONITORING SYSTEM

1. FUEL ALARM/MONITORING SYSTEM SHALL BE AS VEEDER-ROOT #TLS 300C CONFIGURABLE CONSOLE WITH INTEGRAL PRINTER, OVERFILL ALARM AND ACKNOWLEDGEMENT SWITCH.
2. SECONDARY CONTAINMENT PIPE LEAK SENSOR IN TRANSITION SUMP PIT AND FIBERGLASS ATTACHED COLLAR SYSTEM.
3. MAG PLUS INTAKE PROBE AMD MAG PROBE INSTALLATION KITS FOR INVENTORY AND STATIC TESTING.
4. INTERSTITIAL SENSOR FOR FIBERGLASS TANKS.

FUEL PIPING

1. UNDERGROUND FUEL PIPING SHALL BE 1/2" OR 3/4" DOUBLE WALL FLEXIBLE FUEL PIPING FLEXWORKS AS MANUFACTURED BY OPW. UNDERGROUND PIPING SHALL BE INSTALLED IN AXP SERIES ACCESS PIPE.
2. ABOVE GROUND FUEL PIPING SHALL BE 1/2" OR 3/4" BLACK IRON PIPING.
3. UNDERGROUND FUEL TANK VENT PIPING SHALL BE 2" SINGLE WALL FIBERGLASS PIPING AS MANUFACTURED BY OPW.
4. ABOVE GROUND FUEL TANK VENT PIPING SHALL BE 2" BLACK IRON PIPING. TERMINATE 12" ABOVE FINISH GRADE MINIMUM OR AS REQUIRED BY CODE.
5. PROVIDE EMERGENCY SHUT-OFF VALVE FOR ALL FUEL PIPING IN MANHOLES AND TRANSITION SUMP PIT.
6. UNDERGROUND FUEL PIPING SHALL BE INSTALLED AT DEPTHS AND SPACING AS RECOMMENDED BY THE MANUFACTURER. BACKFILL SHALL BE CLEAN MATERIAL AS REQUIRED BY THE MANUFACTURER.
7. ALL UNDERGROUND PIPING SHALL BE INSTALLED SUCH THAT THE PIPING SLOPES DOWN TO THE FUEL TANK.

HRSD	STANDARD DESIGN DETAIL	DRAWING NO. 402B
		SHEET 2 OF 2
	UNDERGROUND FUEL TANK	DATE 1/2021

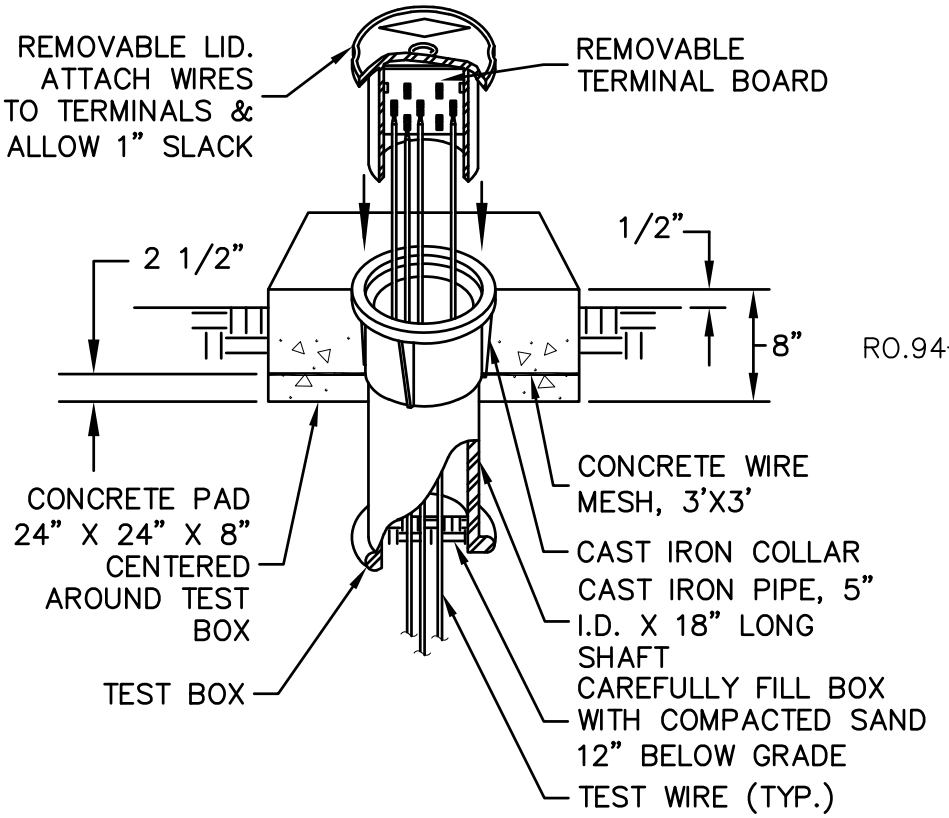

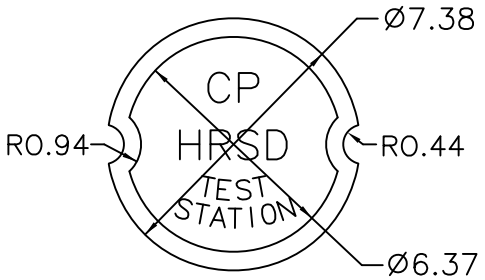

LID
(CAST IRON)

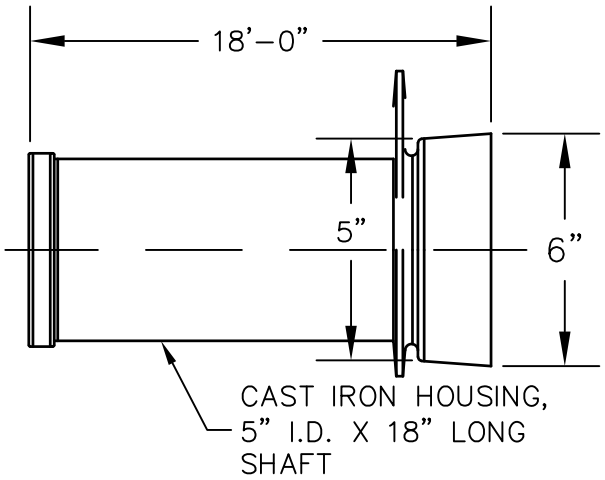

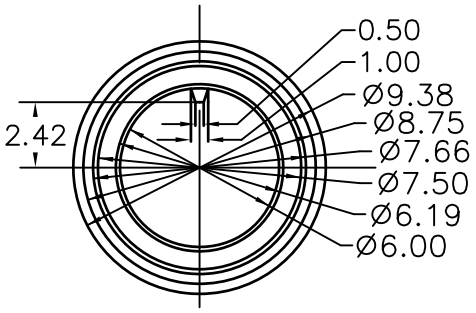

NOTES:

1. MATERIAL, CAST IRON, GRADE TO BE SPECIFIED ON PURCHASE ORDER.
2. ALL RADII SHALL BE $\frac{1}{16}$" MINIMUM.
3. ESTIMATED WEIGHT 37#.

NOT TO SCALE

HRSD	STANDARD DESIGN DETAIL	DRAWING NO. 500A
		SHEET 1 OF 2
	CATHODIC PROTECTION TEST STATION AND TERMINAL BOARD WIRING	DATE 1/2021

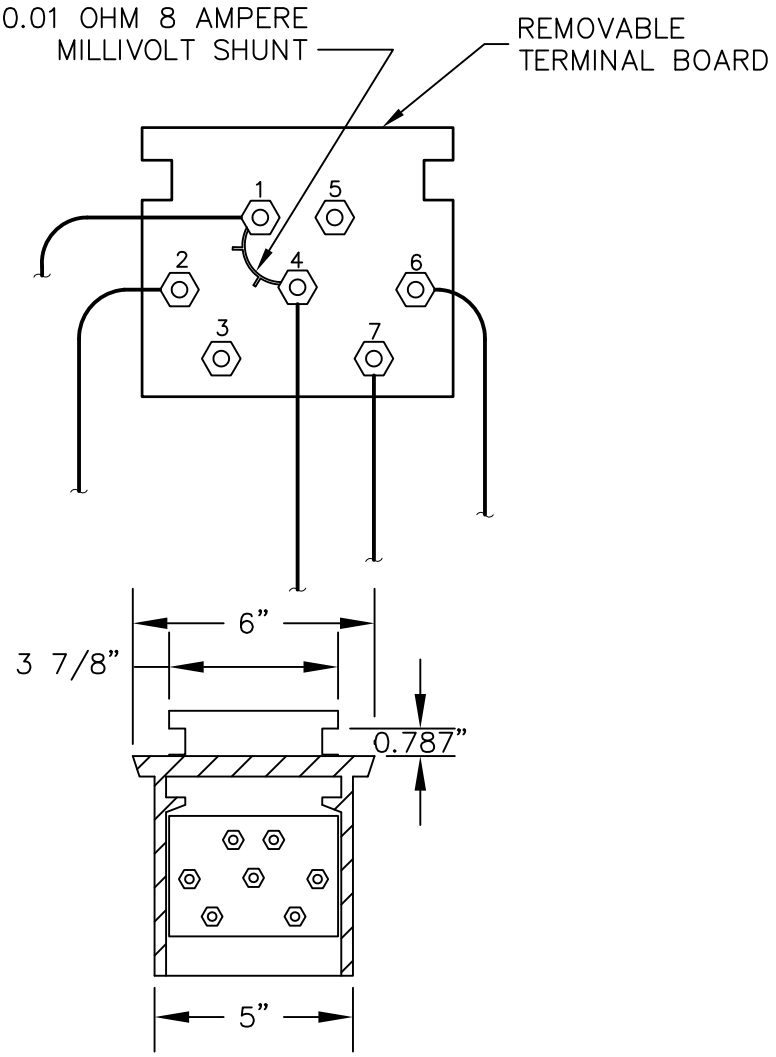

TERMINAL BOARD INSIDE LID

WIRE INSULATION DETAILS				
SHUNT	DESCRIPTION	SIZE #	COLOR THEME	INSULATION
1	ANODE HEADER	#10	RED	THHN
2	ANODE HEADER	#10	RED	THHN
4	STRUCTURE WIRE TO PIPELINE	#10	BLACK	THHN
6	COPPER COPPER SULFATE REFERENCE ELECTRODE	#14	BLUE	HMWPE
7	STRUCTURE WIRE TO PIPELINE	#10	BLACK	THHN

NOTE:
TEST BOARD SHOULD NOT BE CONNECTED TO THE UNDER SIDE OF THE TEST STATION LID.

NOT TO SCALE

HRSD

STANDARD DESIGN DETAIL

CATHODIC PROTECTION TEST STATION
AND TERMINAL BOARD WIRING

DRAWING NO. 500B
SHEET 2 OF 2
DATE 1/2021

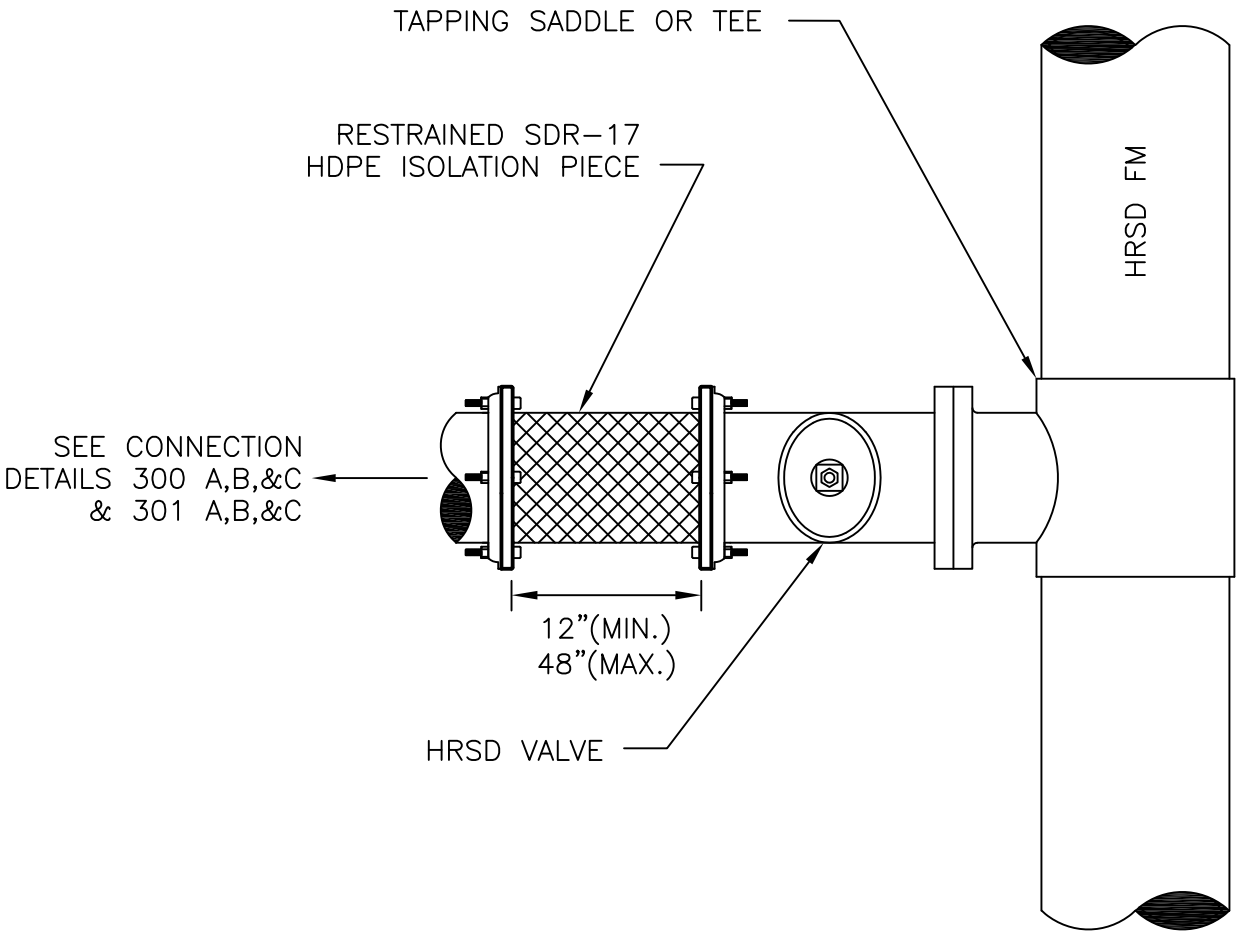

NOTES:

1. LOCALITY TO OWN ALL PIPING, FITTINGS, VALVES, AND CATHODIC PROTECTION SYSTEMS UPSTREAM OF HRSD VALVE.
2. ISOLATION PIECE SHALL BE APPROXIMATELY 24" LONG.

NOT TO SCALE

HRSD	STANDARD DESIGN DETAIL	DRAWING NO. 501
		SHEET 1 OF 1
	CATHODIC PROTECTION ISOLATION DETAIL	DATE 1/2021

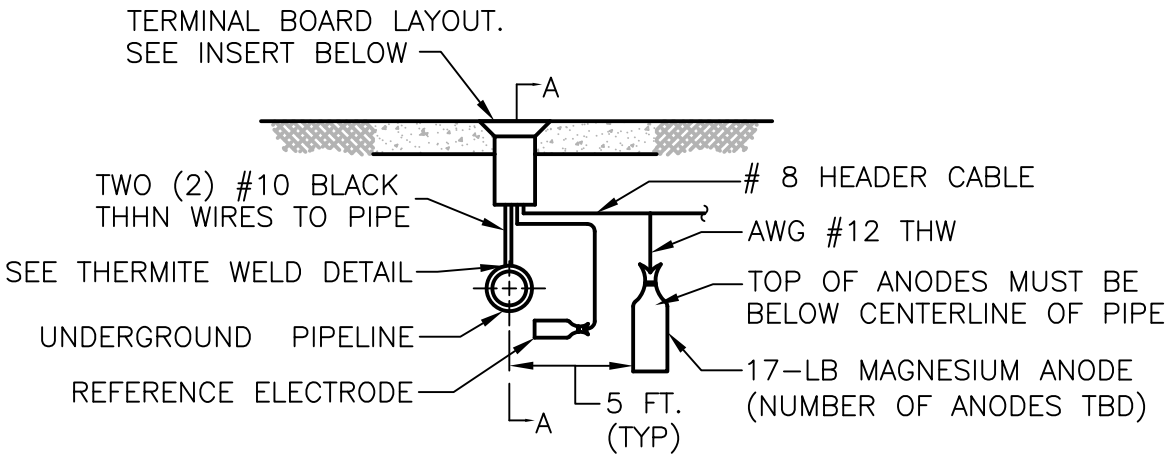

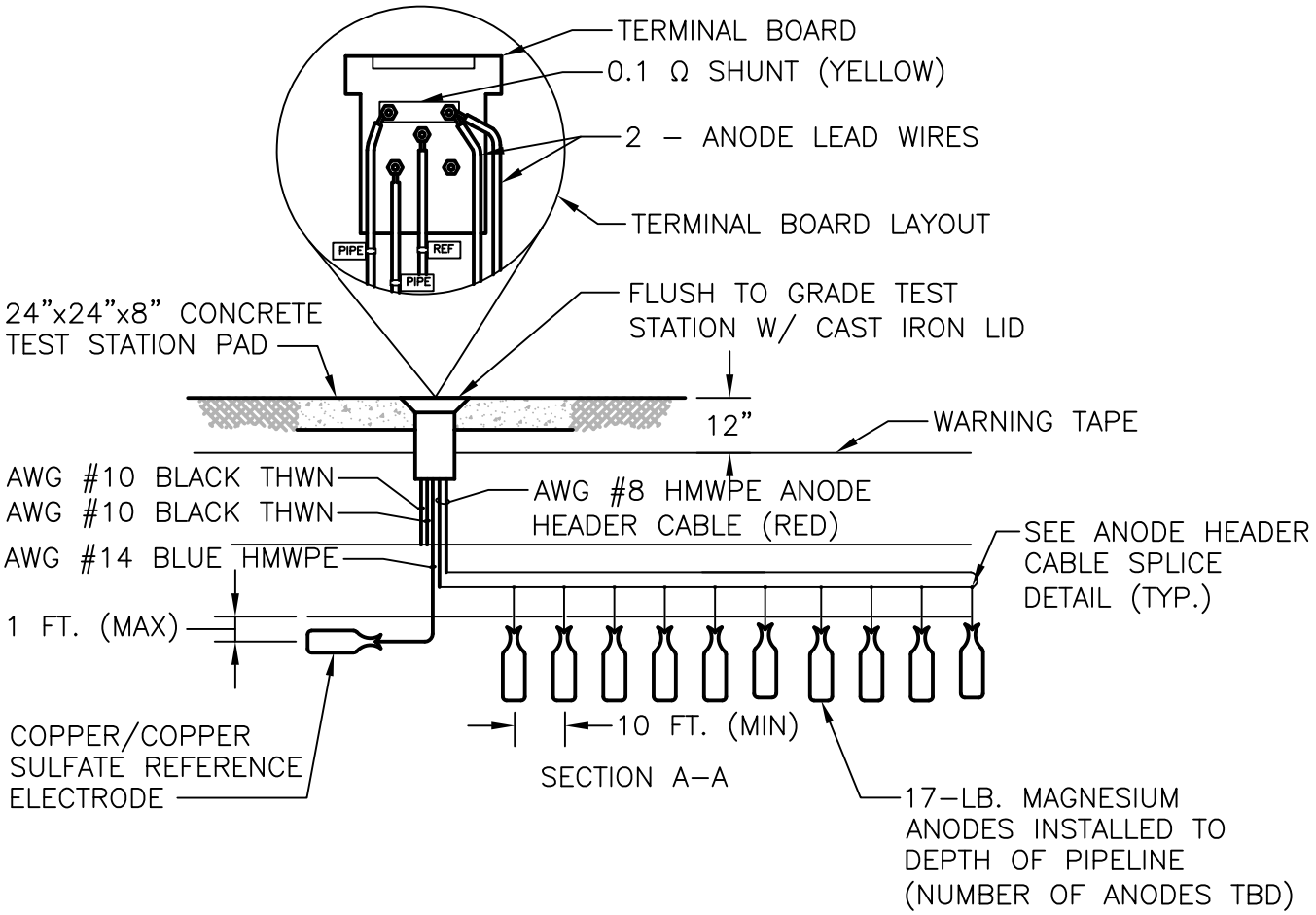

NOT TO SCALE

HRSD	STANDARD DESIGN DETAIL	DRAWING NO. 502
		SHEET 1 OF 1
	ANODE TEST STATION	DATE 1/2021

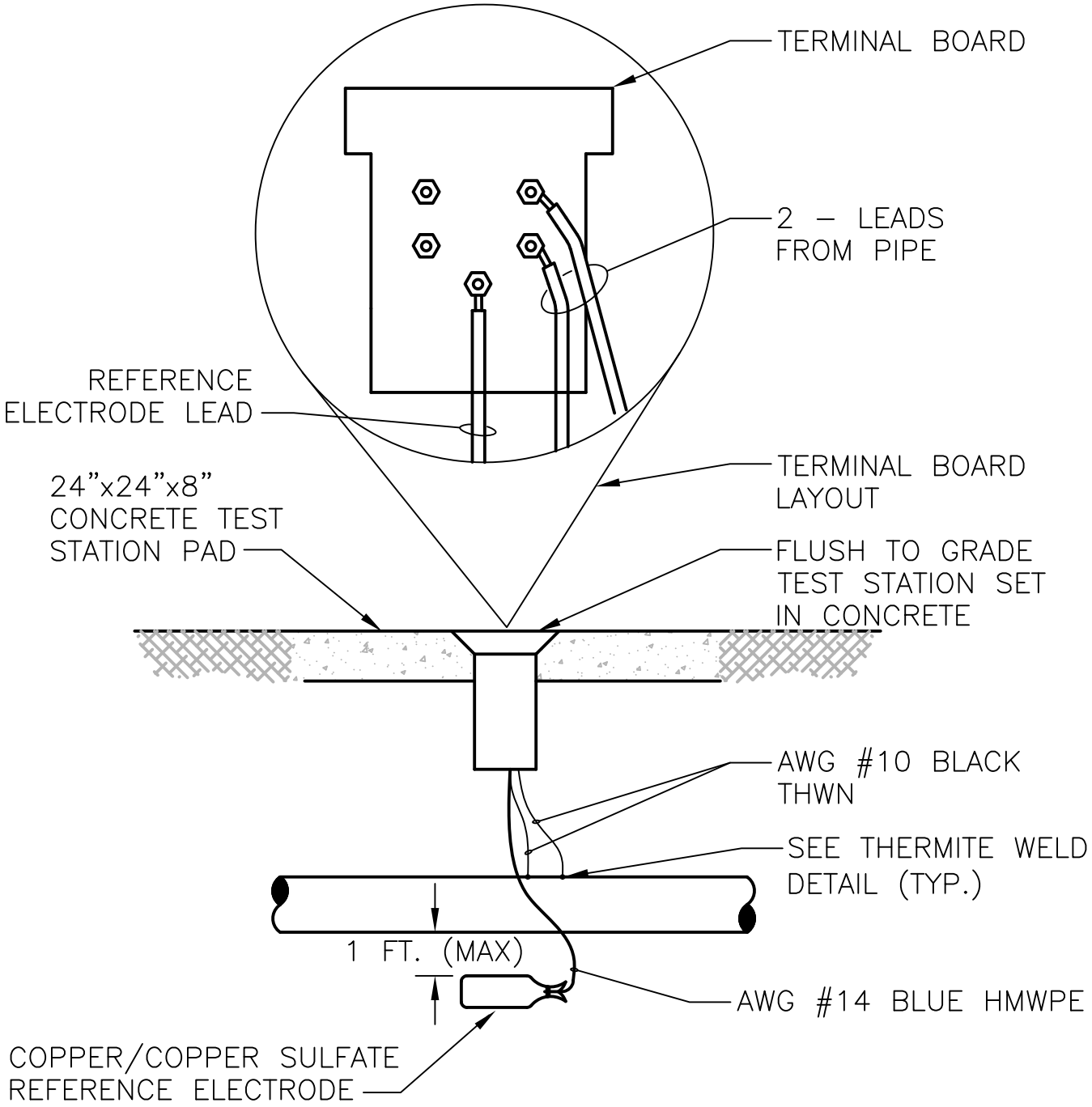

NOTES:

1. WHEN TEST STATION IS OUT OF THE ROAD, USE A GREEN RISER PROTECTED BY BOLLARDS.

NOT TO SCALE

HRSD	STANDARD DESIGN DETAIL	DRAWING NO. 503
		SHEET 1 OF 1
	MONITORING TEST STATION	DATE 1/2021

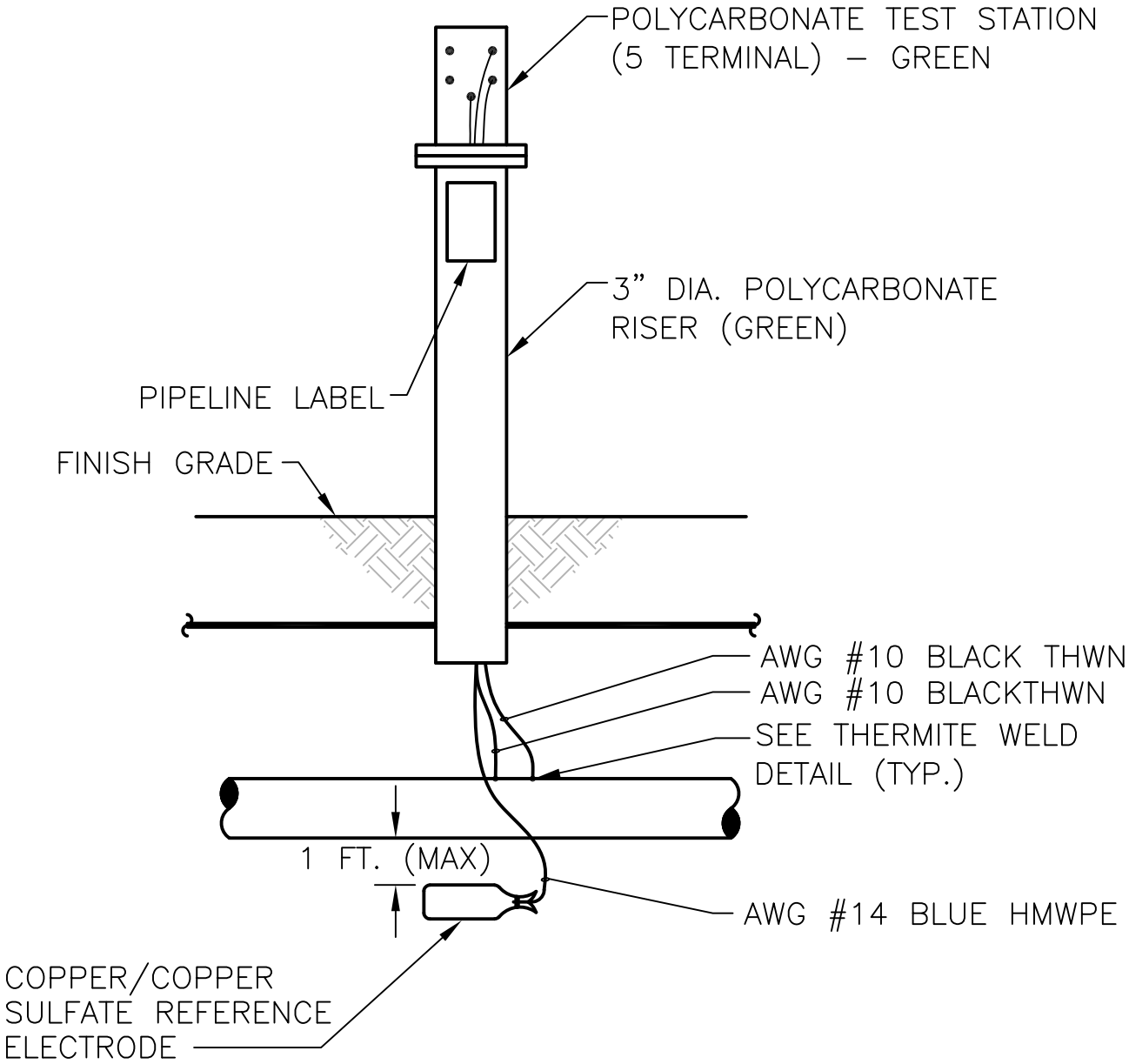

NOTES:

1. WHEN TEST STATION IS OUT OF THE ROAD, USE A GREEN RISER PROTECTED BY BOLLARDS.

NOT TO SCALE

HRSD	STANDARD DESIGN DETAIL	DRAWING NO. 504
		SHEET 1 OF 1
	MONITORING TEST STATION (WITH RISER)	DATE 1/2021

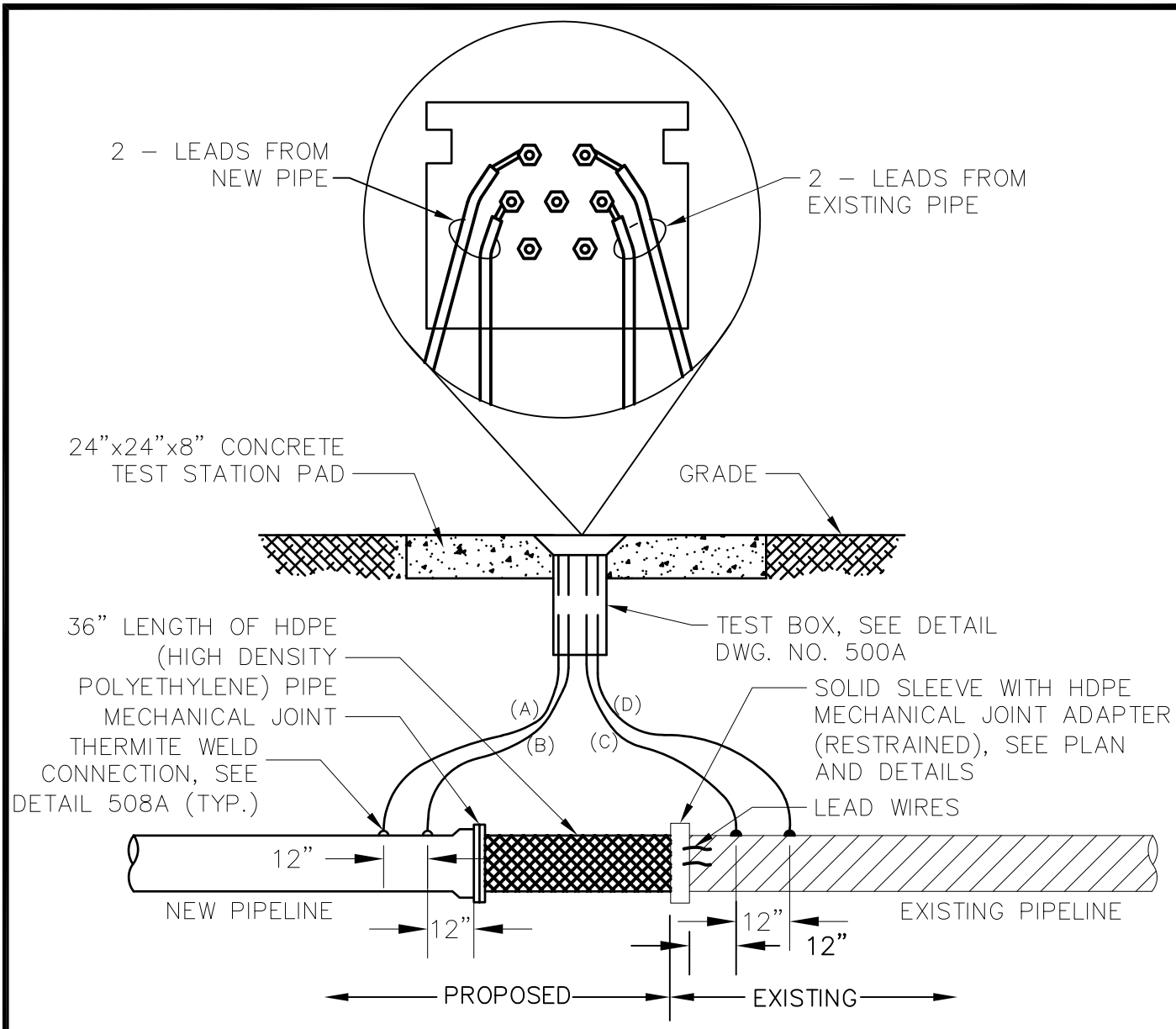

NOTES:

1. WHEN TEST STATION IS OUT OF THE ROAD, USE A GREEN RISER PROTECTED BY BOLLARDS.
2. HDPE SHALL BE DR-17, UNLESS NOTED OTHERWISE ON PLANS OR SPECIFICATIONS.

WIRE INSULATION DETAILS

WIRE	DESCRIPTION	SIZE #	COLOR THEME	INSULATION
A	NEW PIPE TEST LEAD	#10	WHITE	THHN
B	NEW PIPE TEST LEAD	#10	WHITE	THHN
C	EXISTING PIPE TEST LEAD	#10	BLACK	THHN
D	EXISTING PIPE TEST LEAD	#10	BLACK	THHN

NOT TO SCALE

HRSD

STANDARD DESIGN DETAIL

ISOLATION FLANGE TEST STATION

DRAWING NO. 505

SHEET 1 OF 1

DATE 1/2021

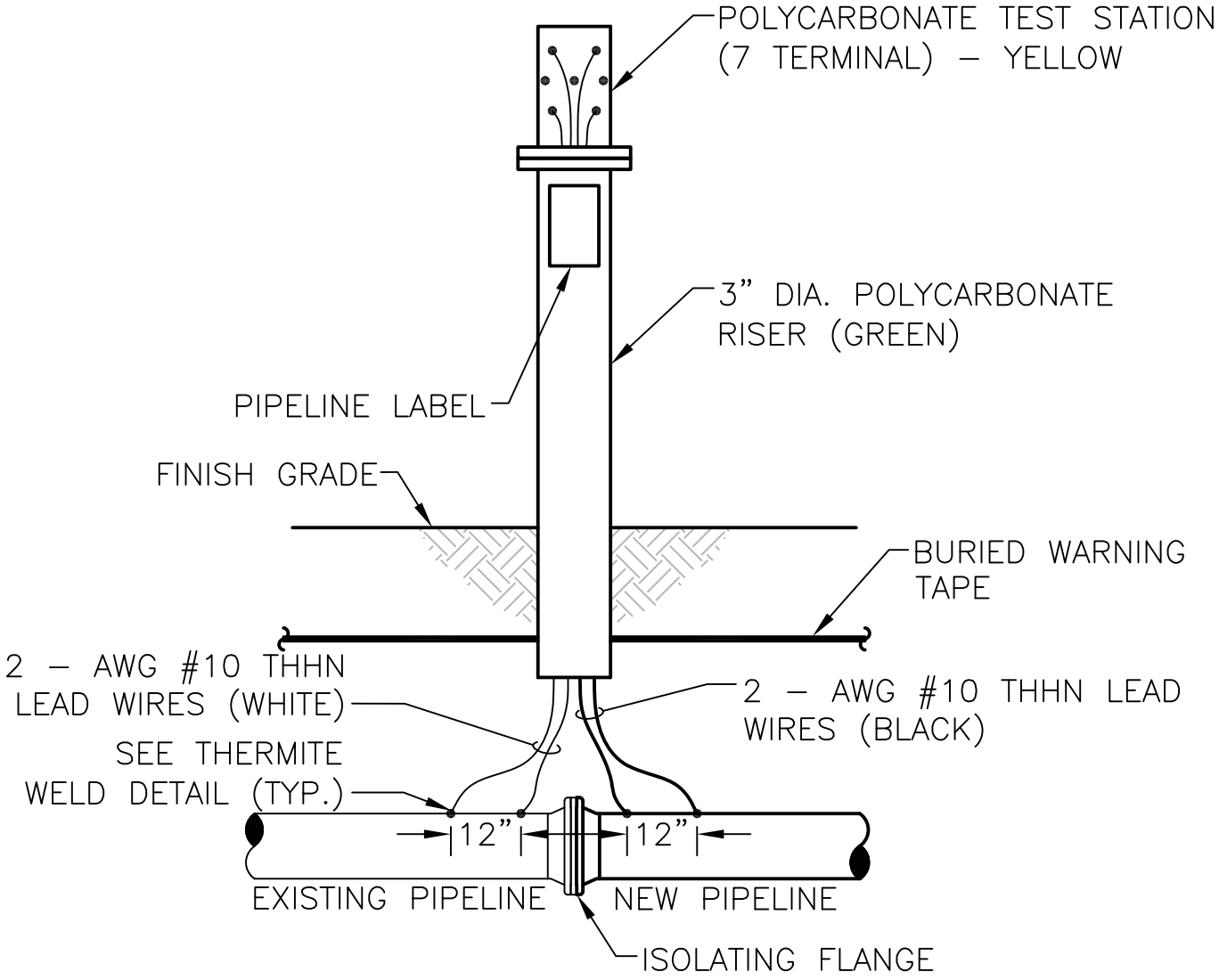

NOTES:

1. WHEN TEST STATION IS OUT OF THE ROAD, USE A GREEN RISER PROTECTED BY BOLLARDS.

NOT TO SCALE

HRSD	STANDARD DESIGN DETAIL	DRAWING NO. 506
		SHEET 1 OF 1
	ISOLATION FLANGE TEST STATION (WITH RISER)	DATE 1/2021

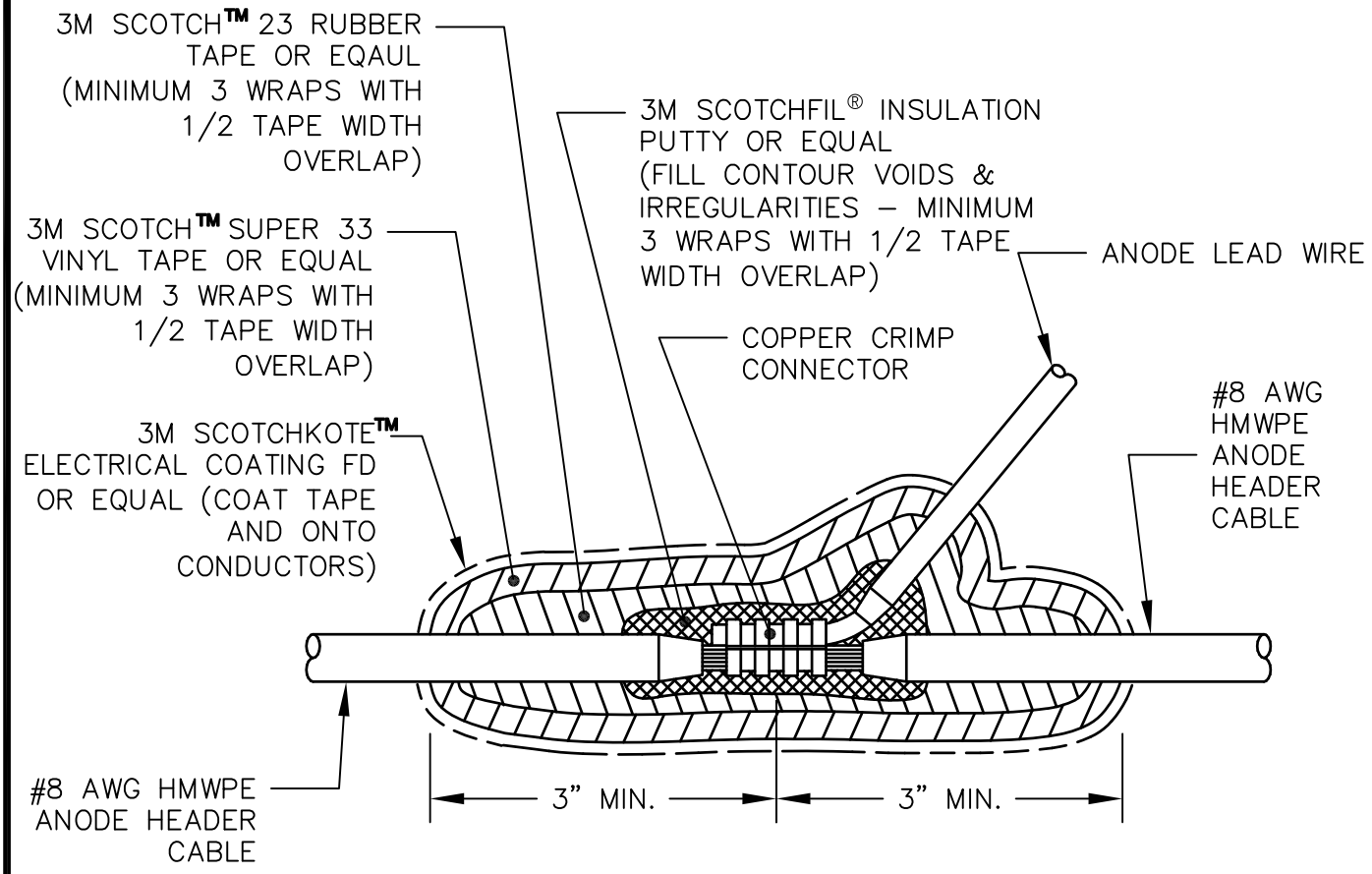

NOTE:

1. ALL SURFACES TO BE CLEAN, DRY AND FREE OF OIL, GREASE AND OTHER DEBRIS PRIOR TO INSTALLING SPLICE COATING MATERIALS.

NOT TO SCALE

HRSD	STANDARD DESIGN DETAIL	DRAWING NO. 507
		SHEET 1 OF 1
	ANODE HEADER CABLE SPLICE – WYE TYPE	DATE 1/2021

STEP 1. WEAR PROPER CLOTHING, SAFETY GLASSES AND GLOVES WHEN THERMITE WELDING. AVOID BREATHING CONCENTRATIONS OF SMOKE, AS IT MAY BE HAZARDOUS TO YOUR HEALTH. REMOVE OR PROTECT FIRE HAZARDS IN THE WELDING AREA. FAILURE TO ABIDE BY THESE SAFETY PROCEDURES MAY RESULT IN HAZARDOUS SITUATIONS TO THE INDIVIDUAL AND BYSTANDERS.

STEP 2. SECURE TEST WIRES TO PIPE PRIOR TO THERMITE WELDING.

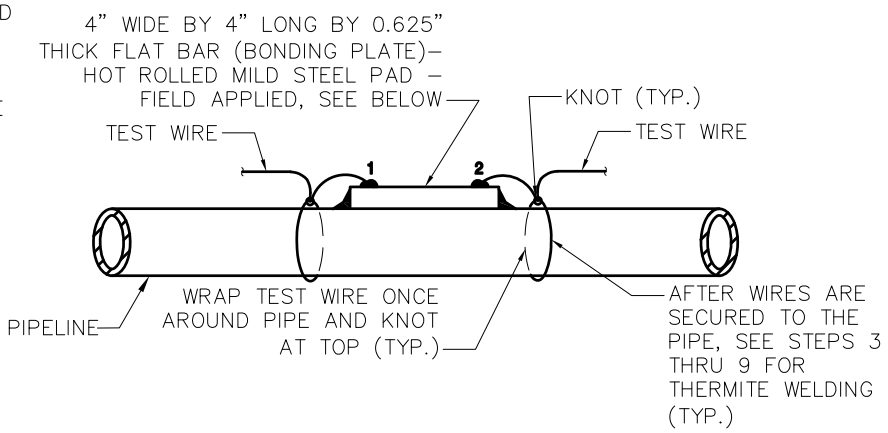

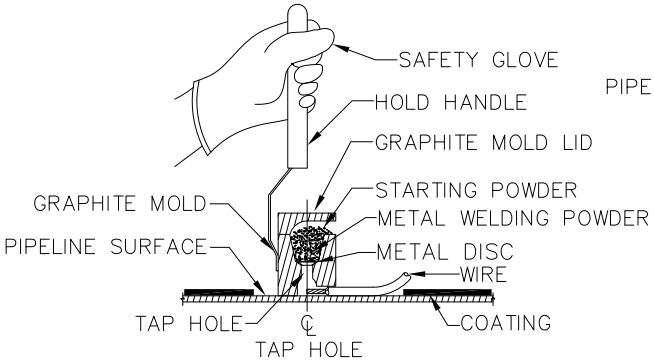

STEP 3. REMOVE BONDING PLATE COATING AREA, 4"x4".

STEP 4. REMOVE BONDING PLATE COATING AREA, 3"x3" & GRIND STRUCTURE CONNECTION AREA TO BARE SHINY METAL AND CLEAN. SURFACE TO BE WELDED MUST BE BRIGHT CLEAN WITH FILE OR WIRE BRUSH AND DRY. UNDER SOME CONDITIONS OF TEMPERATURE AND HUMIDITY, THE SURFACE TO BE WELDED WILL SWEAT CAUSING POROUS WELDS. THIS CAN BE ELIMINATED WITH A HAND TORCH PRIOR TO WELDING.

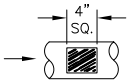

STEP 5. STRIP INSULATION FROM WIRE. EXPOSED CONDUCTORS MUST BE BRIGHT, CLEAN AND DRY. WET CABLES CAN BE DRIED OUT USING A HAND TORCH.

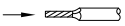

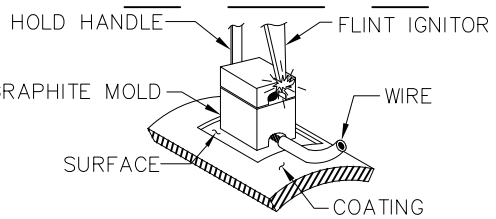

STEP 6. CHECK MOLD TAG FOR MATERIAL TO BE WELDED AND PROPER CARTRIDGE SIZE TO BE USED. MOLD CAN BE DRIED USING A HAND TORCH. PLACE END OF CABLE TO THE CENTER LINE OF THE TAP HOLE. INSERT STEEL DISK BEING SURE IT IS CENTERED OVER THE TAP HOLE. POUR PROPER METAL WELDING POWDER INTO THE CRUCIBLE. CLOSE THE MOLD LID. PLACE SMALL AMOUNT OF STARTING POWDER IN THE IGNITION POCKET. HOLD MOLD FIRMLY BY HANDLE WITH OPENING AWAY FROM INDIVIDUAL AND IGNITE WITH FLINT GUN (<u>NOTE: INDIVIDUAL MUST NOT PLACE EXPOSED BODY PART DIRECTLY OVER LID OR IN FRONT OF LID OPENING TO AVOID INJURY</u>). WAIT 15 SECONDS BEFORE OPENING THE MOLD TO ALLOW WELD METAL TO COOL. FAILURE TO FOLLOW WELDING PROCEDURES MAY RESULT IN IMPROPER WELDS AND DAMAGE TO THE MATERIAL BEING WELDED.

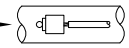

PEEN COOLED WELD FOR SOUNDNESS IN THE PRESENCE OF ENGINEER, SEE NOTE 6 & 7

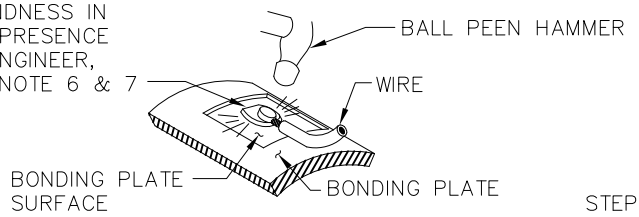

STEP 7. AS SOON AS THE WELD HAS COOLED, ALL WELD SLAG SHALL BE REMOVED AND THE WELDMENT TESTED FOR STRENGTH BY STRIKING A SHARP BLOW WITH A TWO POUND BALL PEEN HAMMER WHILE PULLING FIRMLY ON THE WIRE. ALL UNSOUND WELDS SHALL BE REWELDED AND RETESTED AT THE CONTRACTOR'S EXPENSE. MOLD AND MOLD COMVERS SHALL BE THOROUGHLY CLEANED AFTER COMPLETION OF EACH WELD TO ASSURE THAT NO SLAG WILL PENETRATE INTO THE NEXT WELD.

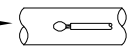

STEP 8. IF WELD BECAME LOOSE DURING PEENING, A NEW WELD MUST BE MADE NOT LESS THAN 6" FROM THE FAILED WELD.

STEP 9. APPLY ROYSTON HANDY CAP IP™ APPLICATION OVER COMPLETED WELD CONNECTION, SEE DETAIL 508–B.

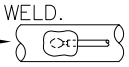

<u>NOTES:</u>

<u>TYPICAL THERMITE WELD PROCEDURES ON BONDING PLATE</u>

1. PIPELINES WITH INTERIOR PROTECTIVE COATING SYSTEMS REQUIRE BONDING PLATES FOR THERMITE WELDS. SEE STANDARD DETAIL 510.
2. WHEN BONDING PLATES ARE NOT PRESENT (TIE–IN LOCATIONS, FIELD CUTS, ETC.), PIN BRAZING METHODS MAY BE UTILIZED, SEE STANDARD DETAIL 511.
3. INTERIOR COATING SYSTEM DAMAGED CAUSED BY THERMITE WELDING OR PIN BRAZING METHODS SHALL BE REPAIRED IN ACCORDANCE WITH THE COATING MANUFACTURES RECOMMENDATIONS.

NOT TO SCALE

HRSD	STANDARD DESIGN DETAIL	DRAWING NO. 508A
		SHEET 1 OF 2
	TYPICAL THERMITE WELD PROCEDURES ON BONDING PLATE	DATE 1/2021

NOTE: APPLICATION TEMPERATURE RANGE IS −20°F TO 120°F. SERVICE TEMPERATURE RANGE IS −40°F TO 150°F.

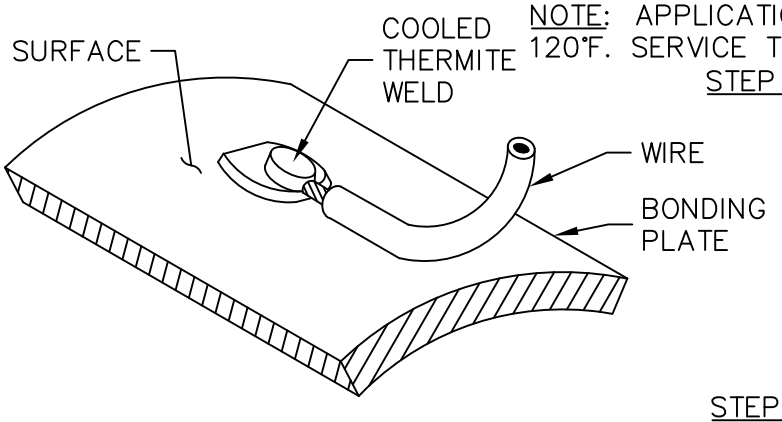

STEP 1. CLEAN ALL MUD, DIRT, GREASE, OIL AND OTHER CONTAMINANTS FROM THE METAL PIPE SURFACE AND MILL COATING (IF APPLICABLE) WHICH IS TO BE COVERED. THE HANDY CAP IP INCORPORATES AN INTERGRATED PRIMER IN ITS TAPECOAT GRAY ADHESIVE AND DOES NOT REQUIRE THE USE OF A LIQUID PRIMER TO APPLICATION.

STEP 2. REMOVE THE RELEASE PAPER FROM THE BOTTOM OF THE HANDY CAP IP. POSITION AND PLACE THE HANDY CAP IP ON THE WELDED AREA WITH THE TUNNEL OVER THE LEAD WIRE.

STEP 3. PUSH THE DOME OF THE CAP FIRMLY INTO THE WELD AREA. LIFT THE LEAD WIRE AWAY FROM THE PIPE AND SQUEEZE THE ADHESIVE COMPOUND COMPLETELY AROUND AND UNDERNEATH THE WIRE. PUSH THE LEAD WIRE BACK DOWN ON THE PIPE AND PRESS THE ELASTOMERIC COMPOUND INTO FIRM CONTACT WITH THE PIPE AND PRESS OVER THE ENTIRE AREA.

STEP 4. NO FURTHER PROTECTION IS REQUIRED WHEN THE HANDY CAP IP COVERS THE ENTIRE EXPOSED METAL AREA. UNCOVERED AREAS SHOULD BE PROTECTED WITH PRIMERLESS TAPECOAT OR ROYSTON OR EQUAL TAPES.

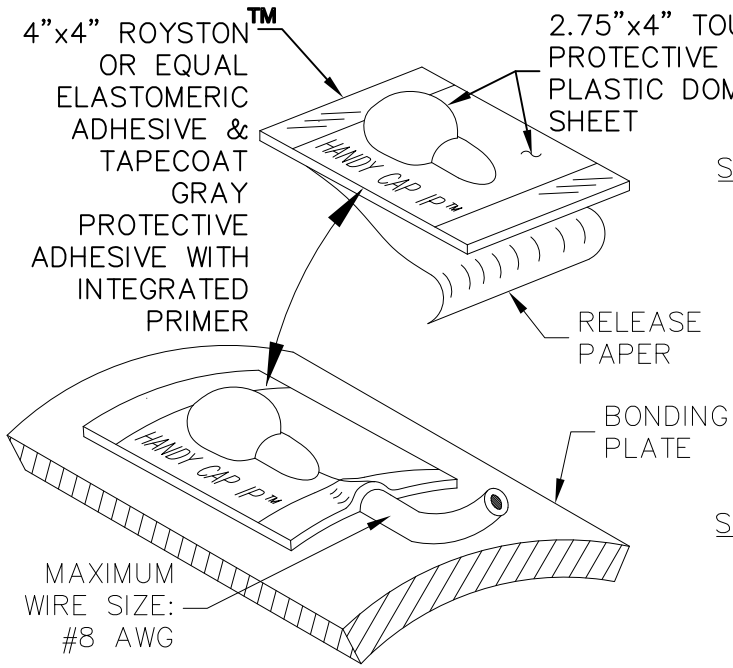

APPLICATION TO UNCOATED PIPE OR REINFORCING COUPON

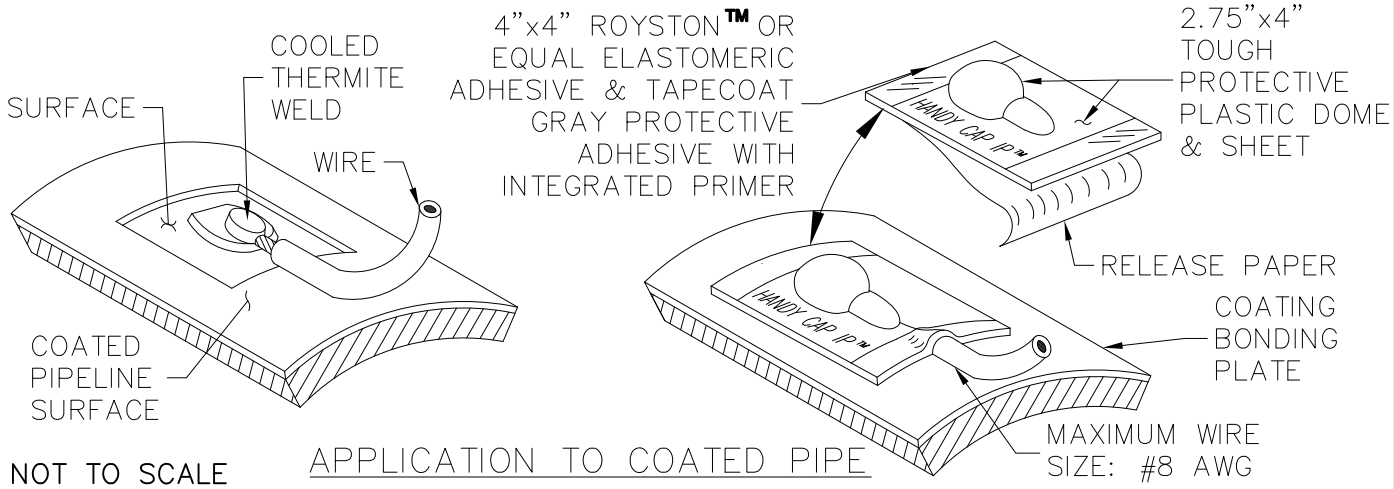

NOT TO SCALE

APPLICATION TO COATED PIPE

HRSD	STANDARD DESIGN DETAIL	DRAWING NO. 508B
	TYPICAL ROYSTON HANDY CAP IP™ INSTALLATION	SHEET 2 OF 2
		DATE 1/2021

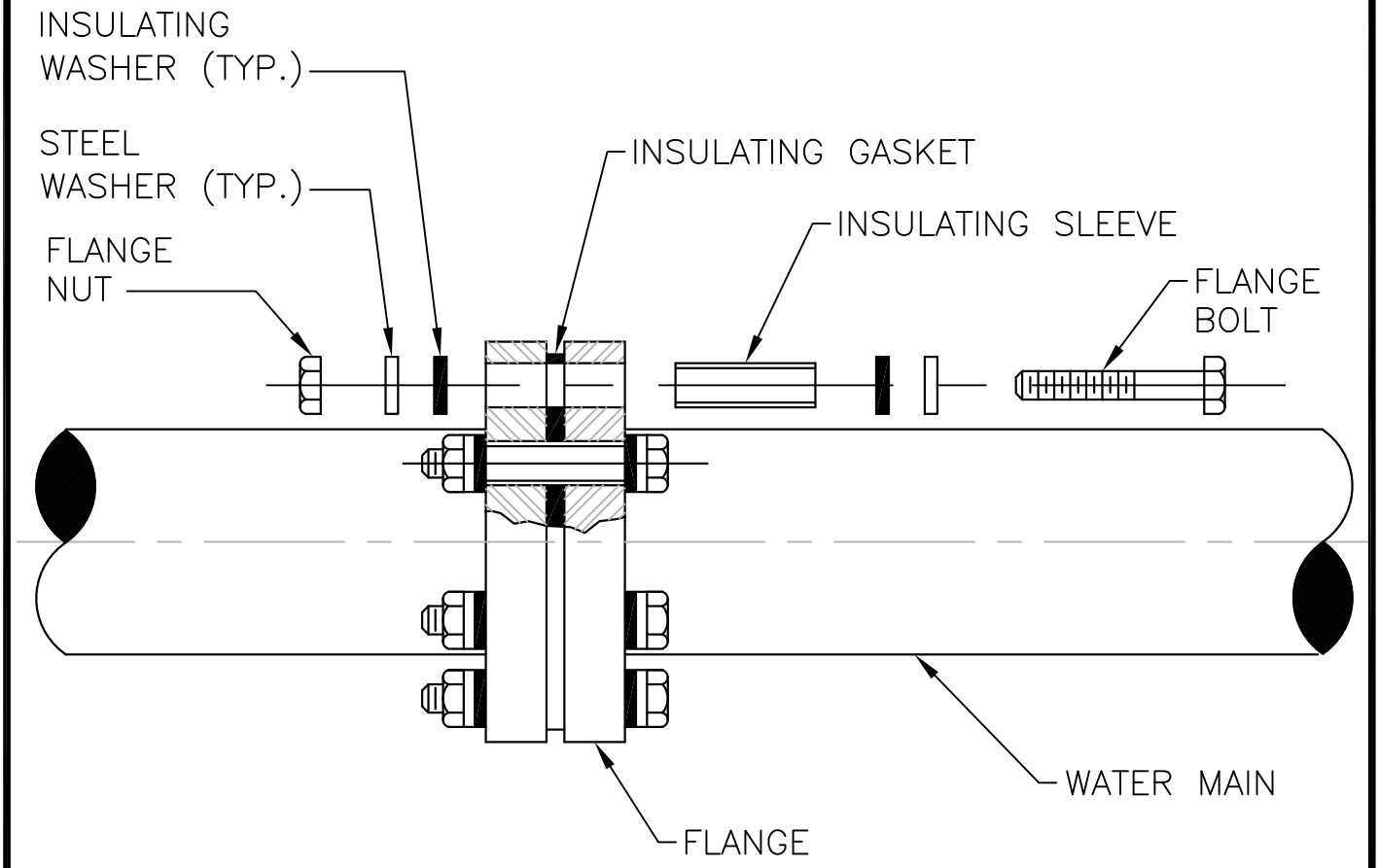

NOTES:

1. AFTER ASSEMBLY, TEST TO VERIFY THAT ISOLATION IS EFFECTIVE. IF ISOLATION IS NOT EFFECTIVE, REPAIR AS NECESSARY AND RETEST. THIS PROCESS SHALL CONTINUE UNTIL ISOLATION IS VERIFIED AS EFFECTIVE.

2. AFTER VERIFYING EFFECTIVE ISOLATION, COAT THE ENTIRE FLANGE AND ALL EXPOSED METAL INCLUDING BOLTS, NUTS, AND WASHERS WITH FOUR COMPONENTS OF DENSO OR TRENTON WAX TAPE COATING SYSTEM. COATING SYSTEM SHALL EXTEND A MINIMUM OF 12 INCHES ON EITHER SIDE OF FLANGE.

3. ALL INSULATING FLANGES TO BE PROVIDED WITH TEST STATIONS.

NOT TO SCALE

HRSD	STANDARD DESIGN DETAIL	DRAWING NO. 509
		SHEET 1 OF 1
	ISOLATING FLANGE KIT	DATE 1/2021

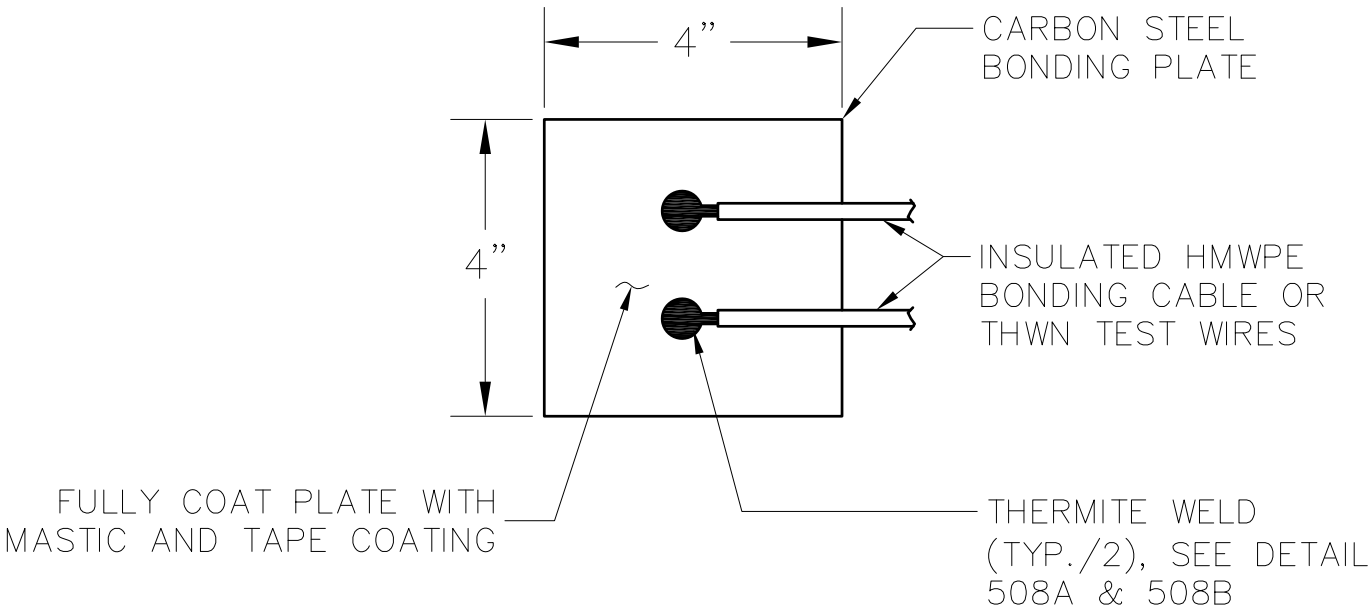

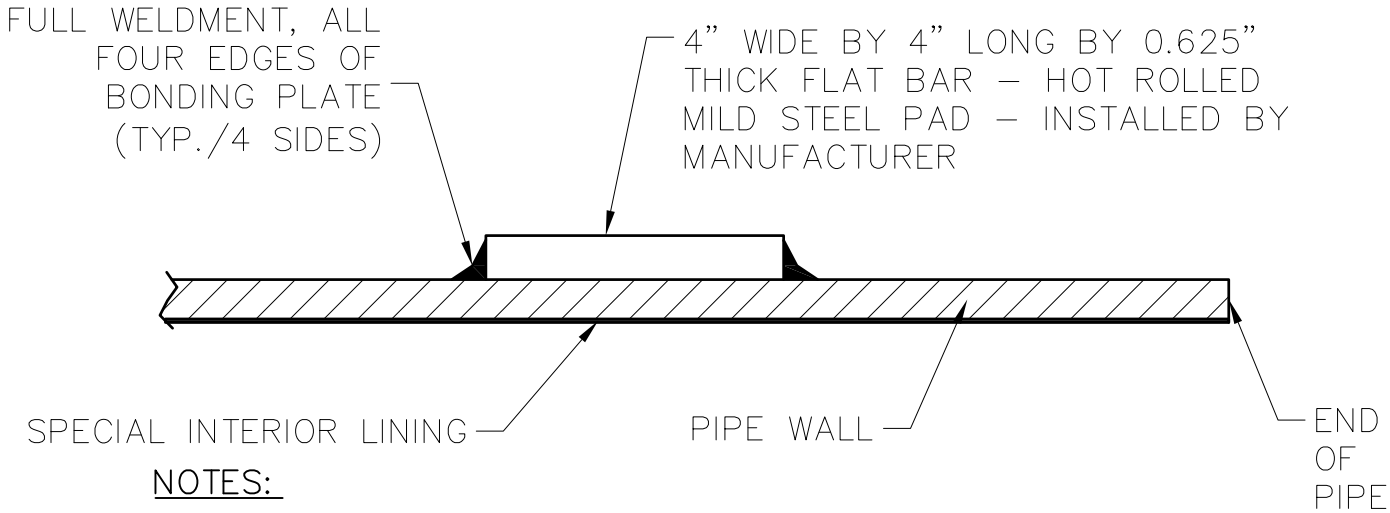

NOTES:

1. PROVIDE BONDING PLATES FOR PIPELINES WITH INTERIOR PROTECTIVE COATING SYSTEMS.
2. BONDING PLATES TO BE INSTALLED BY THE MANUFACTURER PRIOR TO INTERIOR PROTECTIVE COATING SYSTEM APPLICATION.
3. COORDINATE WITH PIPE MANUFACTURER TO POSITION BONDING PLATES ON THE SPIGOT END OF THE PIPE WITH RESPECT TO PIPE DIAMETER AND CORRESPONDING SOCKET DEPTH.

TYPICAL BONDING PLATE DETAIL

NOT TO SCALE

HRSD	STANDARD DESIGN DETAIL	DRAWING NO. 510
		SHEET 1 OF 1
	TYPICAL BONDING PLATE	DATE 1/2021

STEP 1.
REMOVE COATING & CLEAN PIPE

A. BUFF WIRE–TO–PIPE CONNECTION AREA (2"X3") TO BARE SHINY METAL WITH 4" ANGLE GRINDER WITH 80 GRIT FLAP WHEEL ATTACHMENT AND CLEAN.

B. BUFF THE GROUND MAGNET CONNECTION AREA TO BARE SHINY METAL WITH 4" ANGLE GRINDER WITH 80 GRIT FLAP WHEEL ATTACHMENT AND CLEAN.

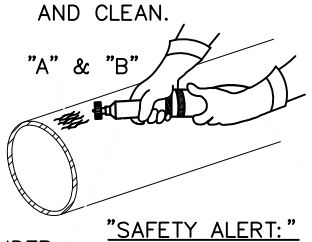

GRINDER

"SAFETY ALERT:"
WEAR SAFETY GLOVES & EYE PROTECTION

STEP 2.
LOAD THE GUN WITH A BRAZING PIN AND FERRULE

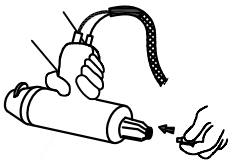

BRAZING GUN

A. INSERT THE BRAZING PIN

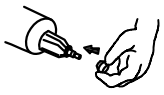

B. THEN INSERT THE FERRULE

C. THEN INSERT THE CABLE LUG

STEP 3.
THE CABLE AND LUG ARE BRAZED TO THE PIPE

A. PLACE GROUND MAGNET CONNECTION ON EXPOSED STEEL PIPE SURFACE AS SHOWN.

B. PLACE THE CABLE LUG AND THE AUTOMATIC GUN ON THE EXPOSED STEEL PIPE SURFACE AS SHOWN.

C. PULL THE TRIGGER. THE PROCESS STARTS AND A SILVER CAPSULE IS OPENED AND A FLUX IS CLEANING THE SURFACE.

D. THE SILVER IS MELTED AROUND THE WIRE IN THE CABLE ITSELF AND THE WORKING MATERIAL.

"SAFETY ALERT:"
WEAR SAFETY GLOVES & EYE PROTECTION

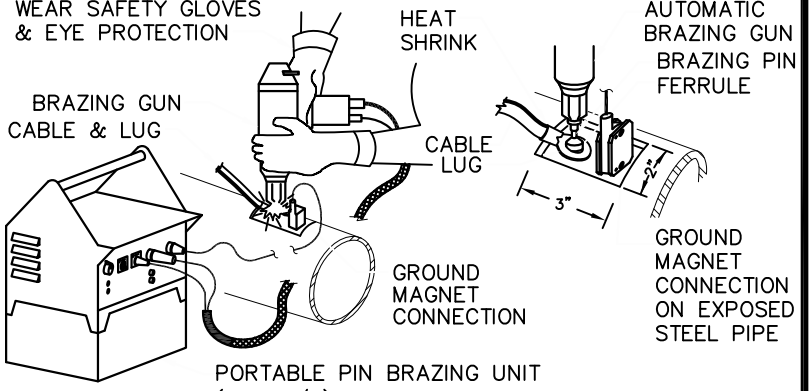

PORTABLE PIN BRAZING UNIT (S30 X/C) PATENT

NOTES (READ FIRST BEFORE BRAZING)

1. GENERAL PROCEDURES IN THIS DETAIL ARE SHOWN FOR THE CONVENIENCE OF THE CONTRACTOR ONLY. ACTUAL INSTALLATION INSTRUCTIONS PROVIDED BY THE MANUFACTURER SHALL BE FOLLOWED.

2. "SAFETY ALERT:" PIPELINES AND APPURTENANCES CONSTRUCTED IN THE VICINITY OF OVERHEAD POWER LINES CAN EXPERIENCE UNSAFE ELECTRICAL VOLTAGES AND POTENTIALLY LETHAL SHOCK HAZARDS WHILE THIS EQUIPMENT IS BEING HANDLED ABOVEGROUND AND UPON PLACEMENT IN THE PIPE TRENCH. CONTRACTOR IS RESPONSIBLE FOR ALL PERSONNEL AND EQUIPMENT SAFETY DURING THE COURSE OF CONSTRUCTION INCLUDING BUT NOT LIMITED TO AWARENESS TRAINING, ALL SAFETY PRECAUTIONS AND INTERIM ELECTRICAL GROUNDING.

3. FOR GALVANIZED PIPE STRAPS, REMOVE ZINC COATING DOWN TO WHITE METAL PRIOR TO PIN BRAZING.

STEP 4.
KNOCK OFF THE CONTROL SHAFT & TEST CONNECTION

AS SOON AS THE WELD HAS COOLED, ALL WELD SLAG SHALL BE REMOVED AND THE WELDMENT TESTED FOR STRENGTH BY STRIKING A SHARP BLOW WITH A TWO POUND BALL PEEN HAMMER WHILE PULLING FIRMLY ON THE WIRE. ALL UNSOUND WELDS SHALL BE REWELDED AND RETESTED AT THE CONTRACTOR'S EXPENSE. MOLD AND MOLD COVERS SHALL BE THOROUGHLY CLEANED AFTER COMPLETION OF EACH WELD TO ASSURE THAT NO SLAG WILL PENETRATE INTO THE NEXT WELD.

"SAFETY ALERT:"
WHEN USING THE BALL PEEN HAMMER, WEAR SAFETY GLOVES, EYE PROTECTION & HEARING PROTECTION

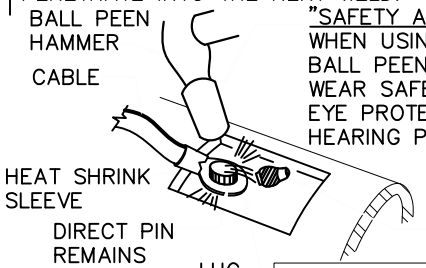

STEP 5.
PIN BRAZED CONNECTION COATING

A. METAL SURFACE TO BE DRY AND FREE OF ALL FOREIGN MATERIAL.

B. REPAIR COATING AT WIRE–TO–PIPE CONNECTIONS IN ACCORDANCE WITH CLIENT COATING MANUAL.

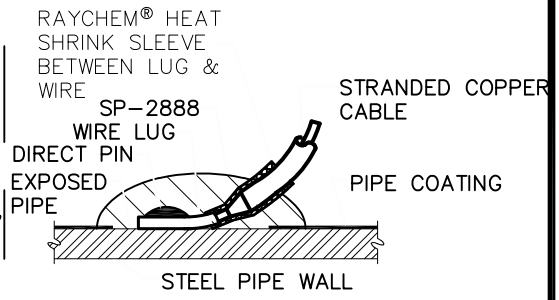

		SAFETRACK UNIT				BAC (EASY BOND) UNIT			
WIRE SIZE	RAYCHEM HEAT SHRINK	TERMINAL SLEEVE	CABLE LUG	BRAZING PIN	FERRULE	STINGER CONNECTION	CABLE LUG	BRAZING PIN	FERRULE
#12 AWG	WCSM–13/4–150–S	6701	6056	10051	2003	278–100–8010	N/A	278–190–3250	270–065–7230
#10 AWG	WCSM–13/4–150–S	6702	6056	10051	2003	278–100–8040	N/A	278–190–3250	270–065–7230
#8 AWG	WCSM–13/4–150–S	N/A	6056	10051	2003	N/A	278–100–9830	278–190–3250	270–065–7230
#6 AWG	WCSM–20/6–150–S	N/A	6057	10051	2003	N/A	278–100–9830	278–190–3250	270–065–7230
#4 AWG	WCSM–20/6–150–S	N/A	6080	10301	2003	N/A	278–100–9000	278–190–3250	270–065–7230
#2 AWG	WCSM–20/6–150–S	N/A	6081	10301	2003	N/A	270–088–7800	270–083–3520	270–065–7230
#1 AWG	WCSM–33/8–150–S	N/A	6079	10301	2003	N/A	278–100–7810	270–083–3520	270–065–7230

NOT TO SCALE

HRSD

STANDARD DESIGN DETAIL

COPPER WIRE TO PIPE PIN BRAZING PROCEDURES

DRAWING NO. 511

SHEET 1 OF 1

DATE 1/2021

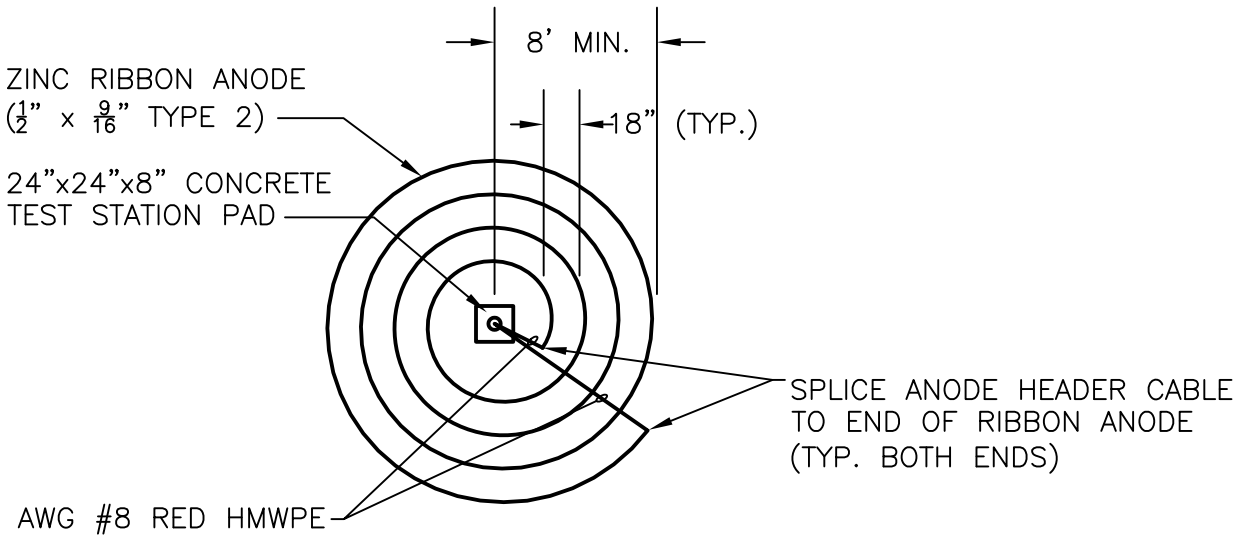

PLAN

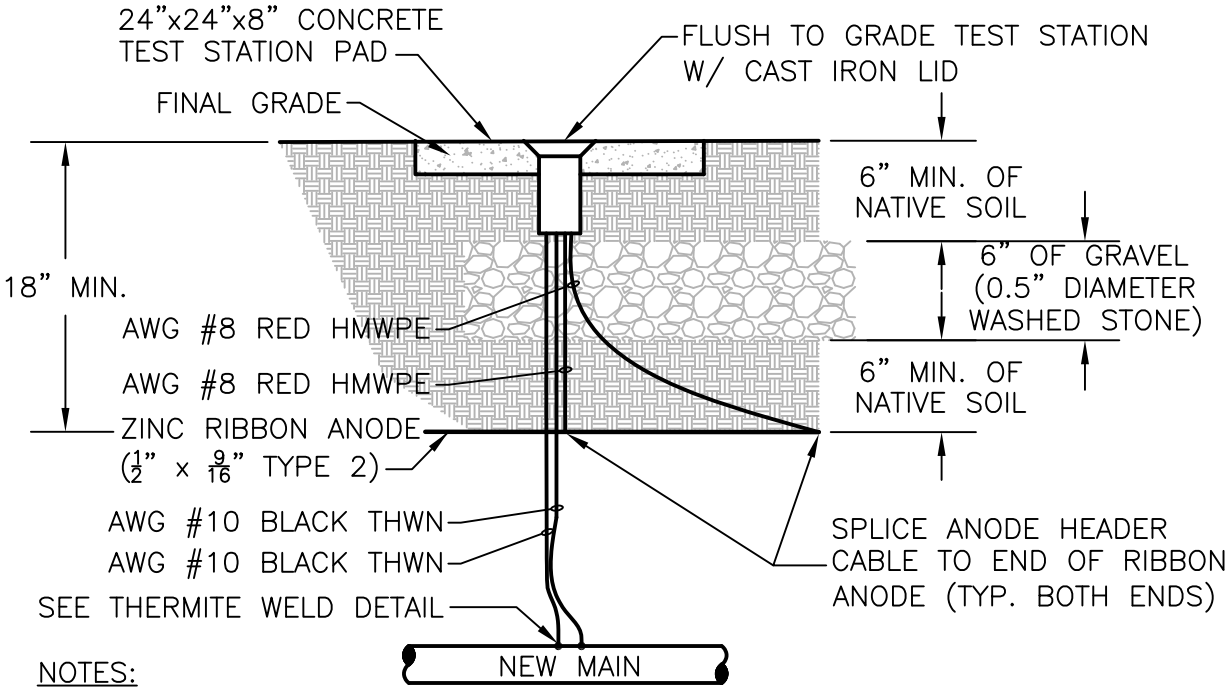

NOTES:

1. TEST STATIONS LOCATED ALONG PAVED ROADWAYS SHALL GENERALLY BE LOCATED 3 FEET OUTSIDE OF THE EDGE OF PAVEMENT IN A NON-PAVED AREA. ROUTE ALL TEST WIRES AT A MINIMUM DEPTH OF 24 INCHES TO THE FINAL TEST STATION LOCATION. TEST STATION LOCATIONS SHALL BE FIELD ADJUSTED.
2. ROUTE WIRES IN 1 INCH PVC CONDUIT TO TEST BOX. INSTALL CABLE WARNING TAPE 18 INCHES ABOVE PVC CONDUIT.
3. MAINTAIN SUFFICIENT SLACK IN THE TEST WIRES SO THAT THE WIRES CAN EXTEND A MINIMUM OF 18 INCHES FROM THE TEST BOX.
4. INSTALL 0.1 OHM SHUNT (YELLOW) BETWEEN TERMINALS #1 AND #4.
5. AT FIRE HYDRANTS, VAULTS, AND OTHER APPURTENANCES, ZINC RIBBON ANODE SHALL BE COILED AROUND FIRE HYDRANT, VAULT, OR APPURTENANCE.

NOT TO SCALE

HRSD	STANDARD DESIGN DETAIL	DRAWING NO. 521
		SHEET 1 OF 1
	DUCTILE IRON PIPE GALVANIC SYSTEM AC GROUND MAT	DATE 1/2021

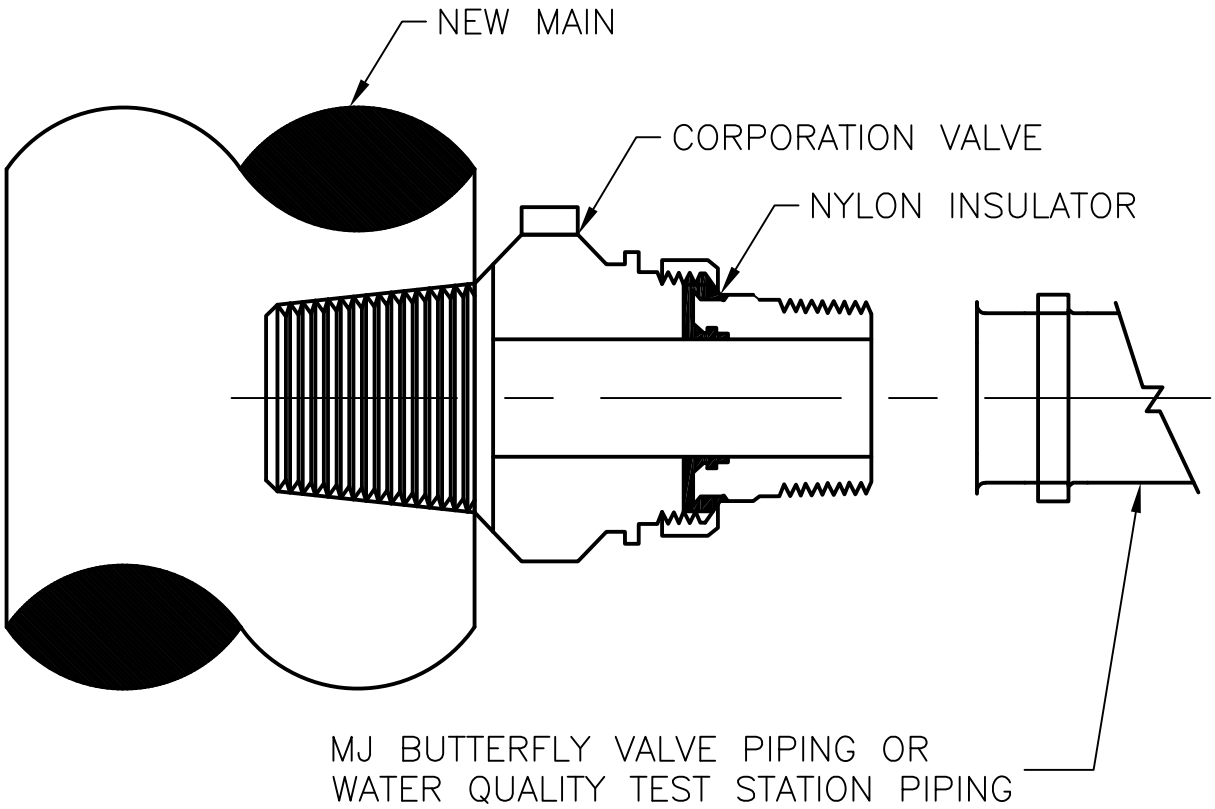

NOTES:

1. AFTER ASSEMBLY, TEST TO VERIFY THAT ISOLATION IS EFFECTIVE. IF ISOLATION IS NOT EFFECTIVE, REPAIR AS NECESSARY AND RETEST. THIS PROCESS SHALL CONTINUE UNTIL ISOLATION IS VERIFIED AS EFFECTIVE.

2. AFTER VERIFYING EFFECTIVE ISOLATION, COAT THE ENTIRE CORPORATION AND ALL EXPOSED METAL WITH FOUR COMPONENTS OF DENSO OR TRENTON WAX TAPE COATING SYSTEM. COATING SYSTEM SHALL EXTEND A MINIMUM ON EITHER SIDE OF CORPORATION.

NOT TO SCALE

HRSD	STANDARD DESIGN DETAIL	DRAWING NO. 522
	DUCTILE IRON PIPE GALVANIC SYSTEM INSULATING CORPORATION	SHEET 1 OF 1
		DATE 1/2021

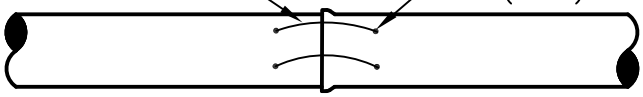

TYPICAL MAIN JOINT BOND

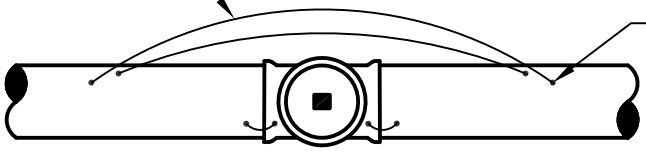

VALVE

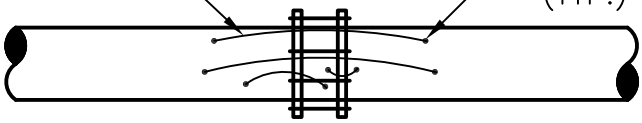

MECHANICAL COUPLING

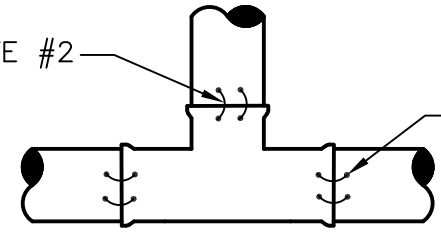

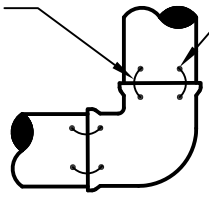

BEND, REDUCER, SOLID SLEEVE

NOTES:

1. THERMITE WELD BONDING WIRES TO TOP OF MAIN FITTINGS.
2. WIRE SIZE FOR BONDING JOINTS SHALL BE AS FOLLOWS:

MAIN SIZE	WIRE SIZE
LARGER THAN 36 INCHES	AWG #2 HMWPE
16 INCHES TO 36 INCHES	AWG #4 HMWPE
12 INCHES AND SMALLER	AWG #6 HMWPE

NOT TO SCALE

HRSD

STANDARD DESIGN DETAIL

DUCTILE IRON PIPE GALVANIC SYSTEM
MAIN BONDING

DRAWING NO. 523

SHEET 1 OF 1

DATE 1/2021

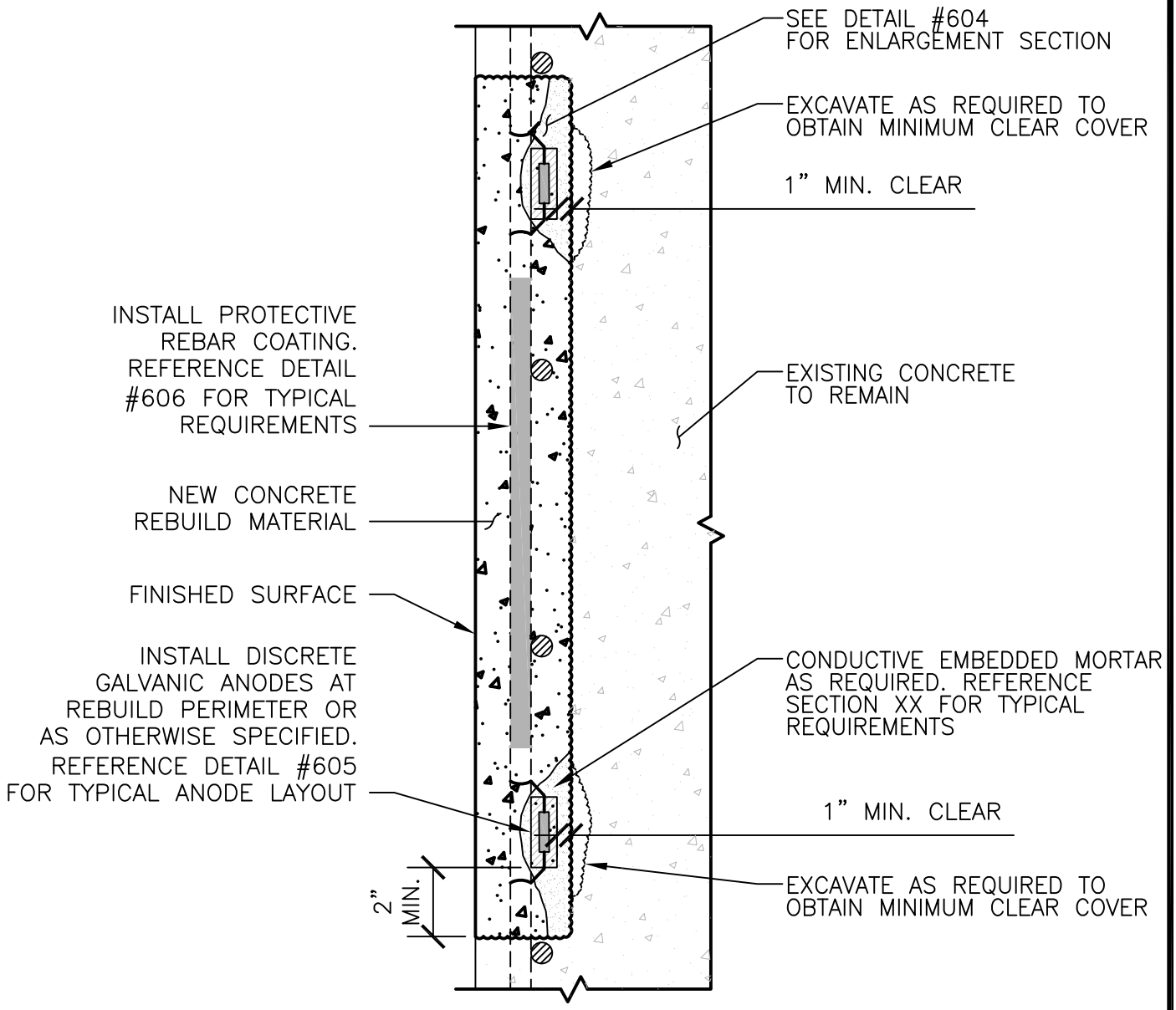

NOTES:

1. REFERENCE SPECIFICATION 03700 FOR CONCRETE REBUILD INFORMATION NOT OTHERWISE SHOWN.
2. GALVANIC ANODE SIZES AND SHAPES MAY VARY.

NOT TO SCALE

HRSD	STANDARD DESIGN DETAIL	DRAWING NO. 600
		SHEET 1 OF 1
	INSTALLATION OF DISCRETE GALVANIC ANODES	DATE 1/2021

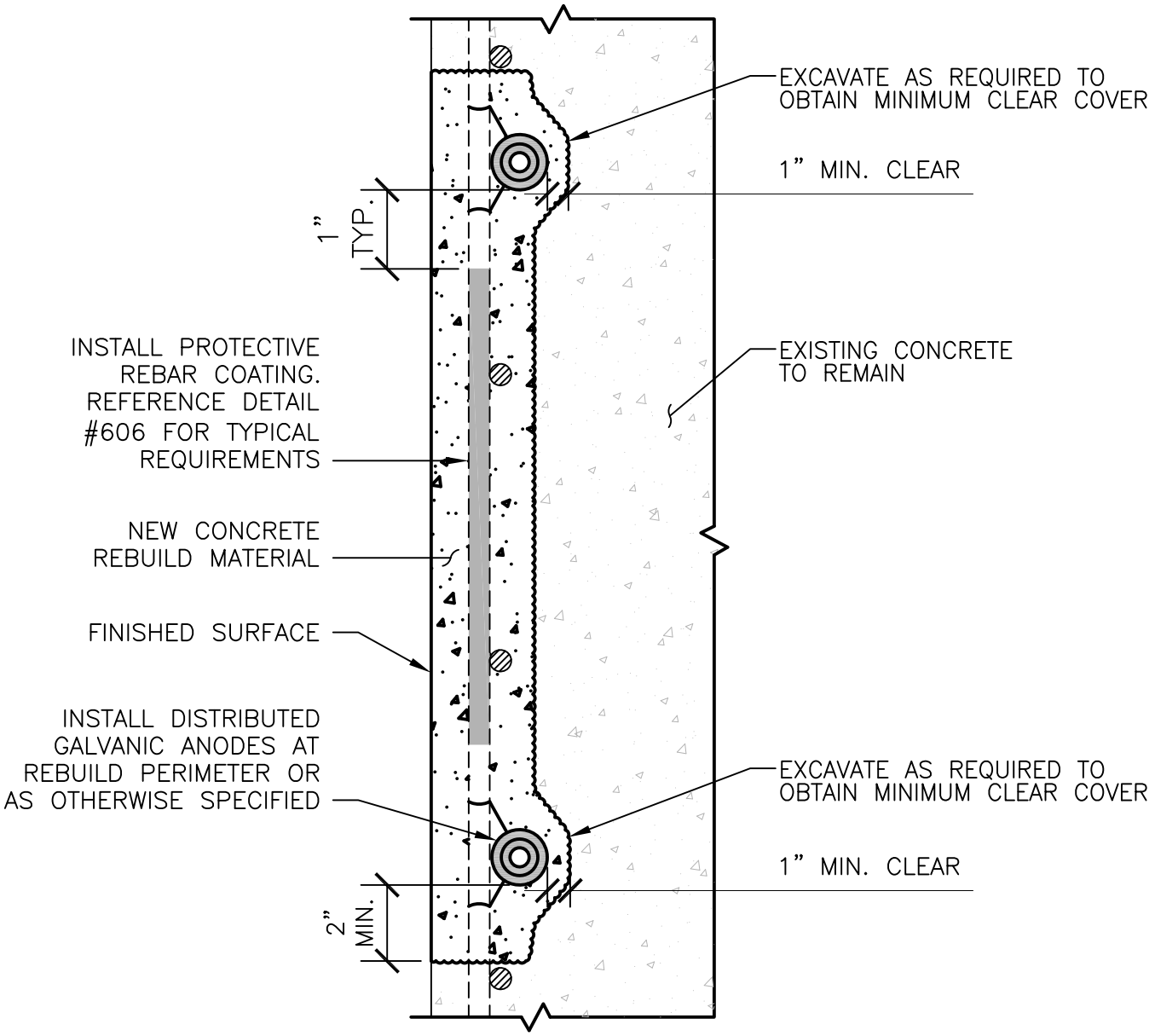

NOTES:

1. REFERENCE SPECIFICATION 03700 FOR CONCRETE REBUILD INFORMATION NOT OTHERWISE SHOWN.
2. CONDUCTIVE MORTAR NOT SHOWN. ENCAPSULATE ANODES IN CONDUCTIVE MORTAR AS REQUIRED BY MANUFACTURER.
3. GALVANIC ANODE SIZES AND SHAPES MAY VARY.

NOT TO SCALE

HRSD	STANDARD DESIGN DETAIL	DRAWING NO. 601
		SHEET 1 OF 1
	INSTALLATION OF DISTRIBUTED GALVANIC ANODES	DATE 1/2021

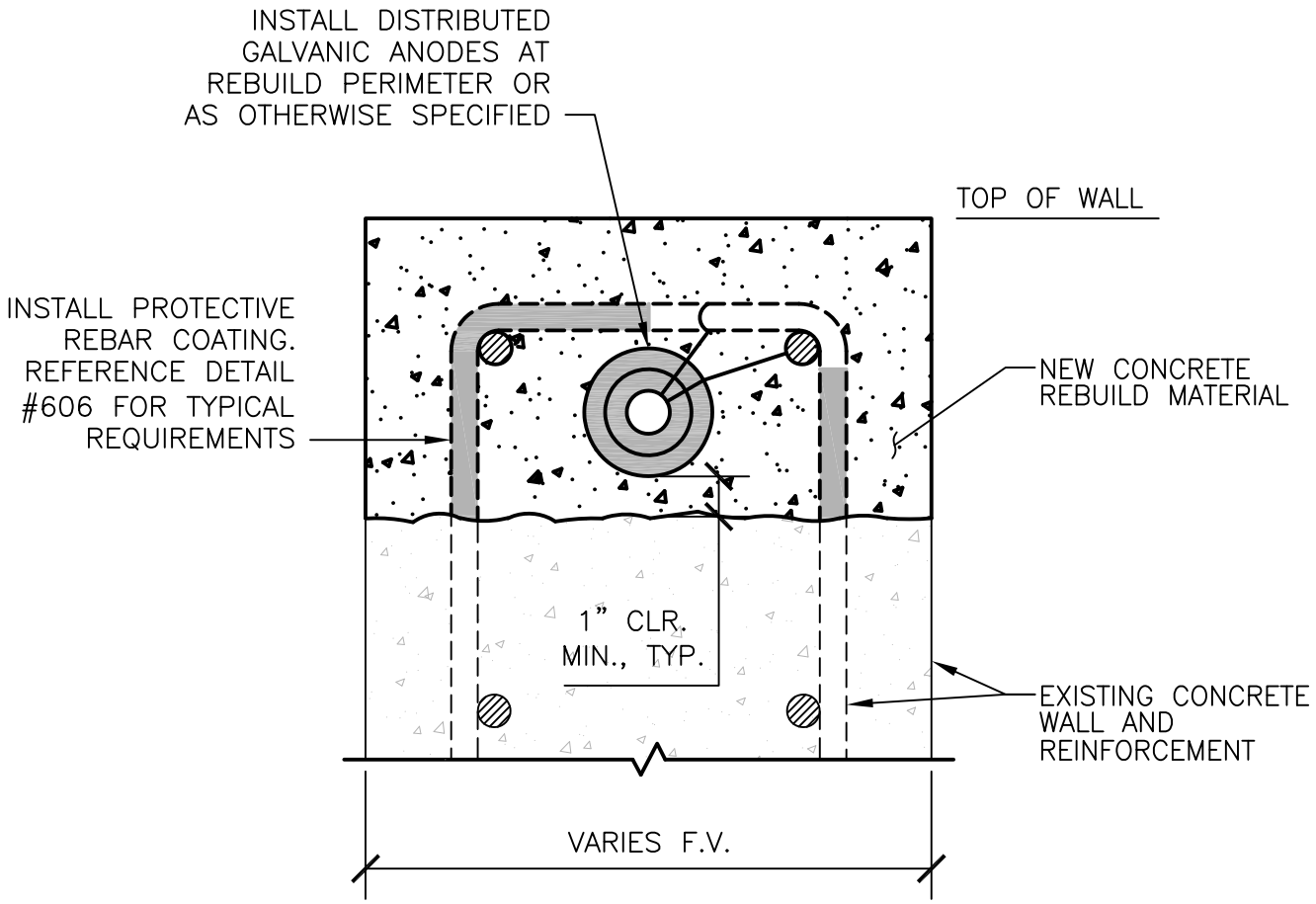

NOTES:

1. REFERENCE SPECIFICATION 03700 FOR CONCRETE REBUILD INFORMATION NOT OTHERWISE SHOWN.
2. CONDUCTIVE MORTAR NOT SHOWN. ENCAPSULATE ANODES IN CONDUCTIVE MORTAR AS REQUIRED BY MANUFACTURER.
3. GALVANIC ANODE SIZES AND SHAPES MAY VARY.

NOT TO SCALE

HRSD	STANDARD DESIGN DETAIL	DRAWING NO. 602
		SHEET 1 OF 1
	DISTRIBUTED GALVANIC ANODES AT TOP OF WALL	DATE 1/2021

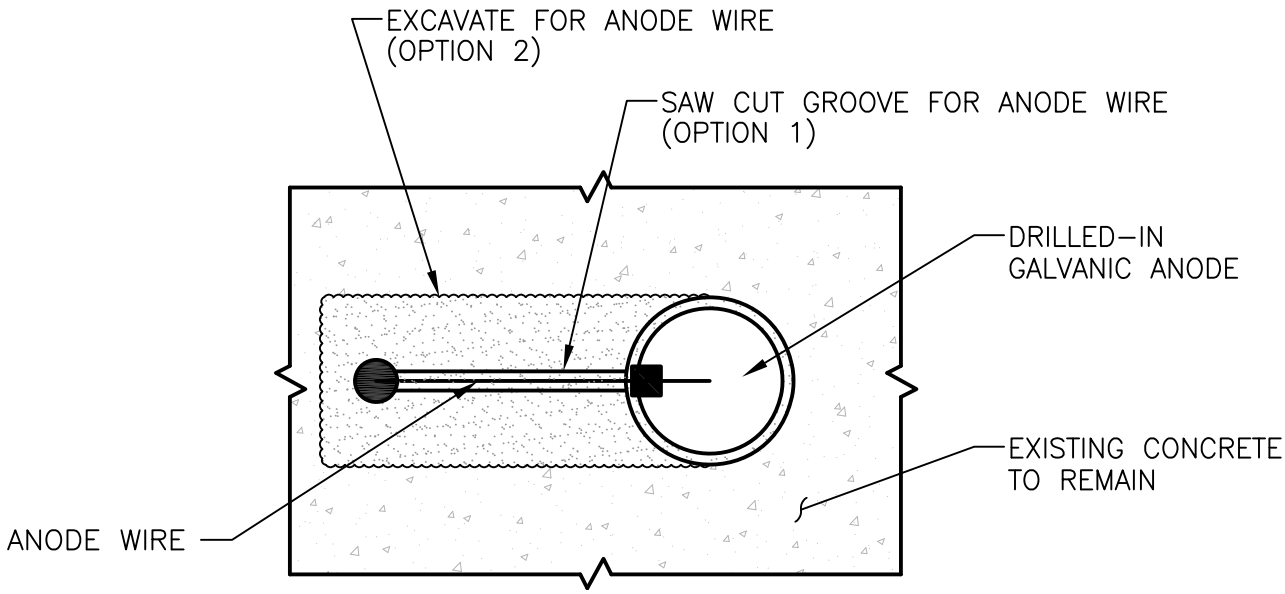

PLAN VIEW

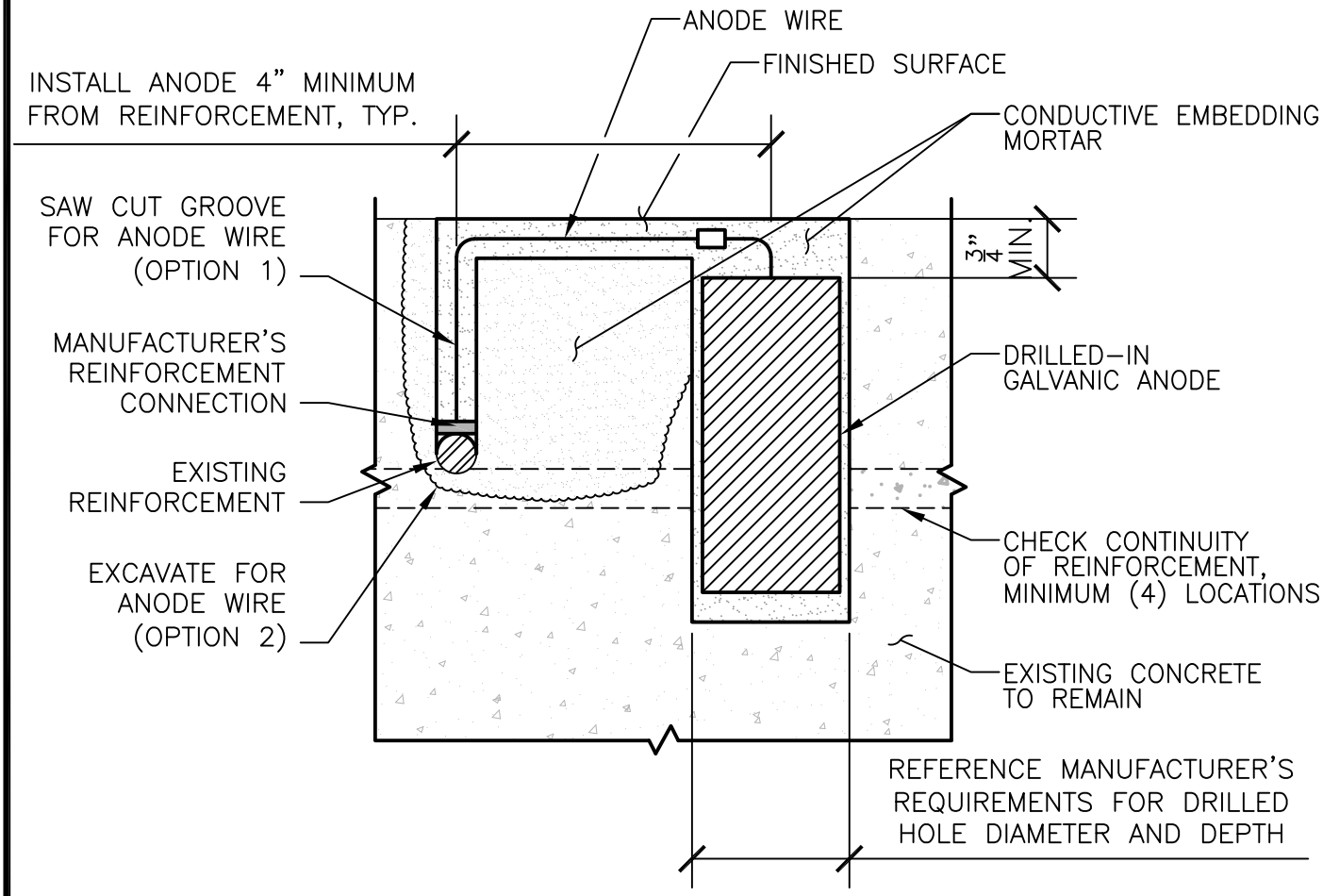

SECTION VIEW

NOT TO SCALE

HRSD	STANDARD DESIGN DETAIL	DRAWING NO. 603
		SHEET 1 OF 1
	INSTALLATION OF DRILLED–IN GALVANIC ANODES	DATE 1/2021

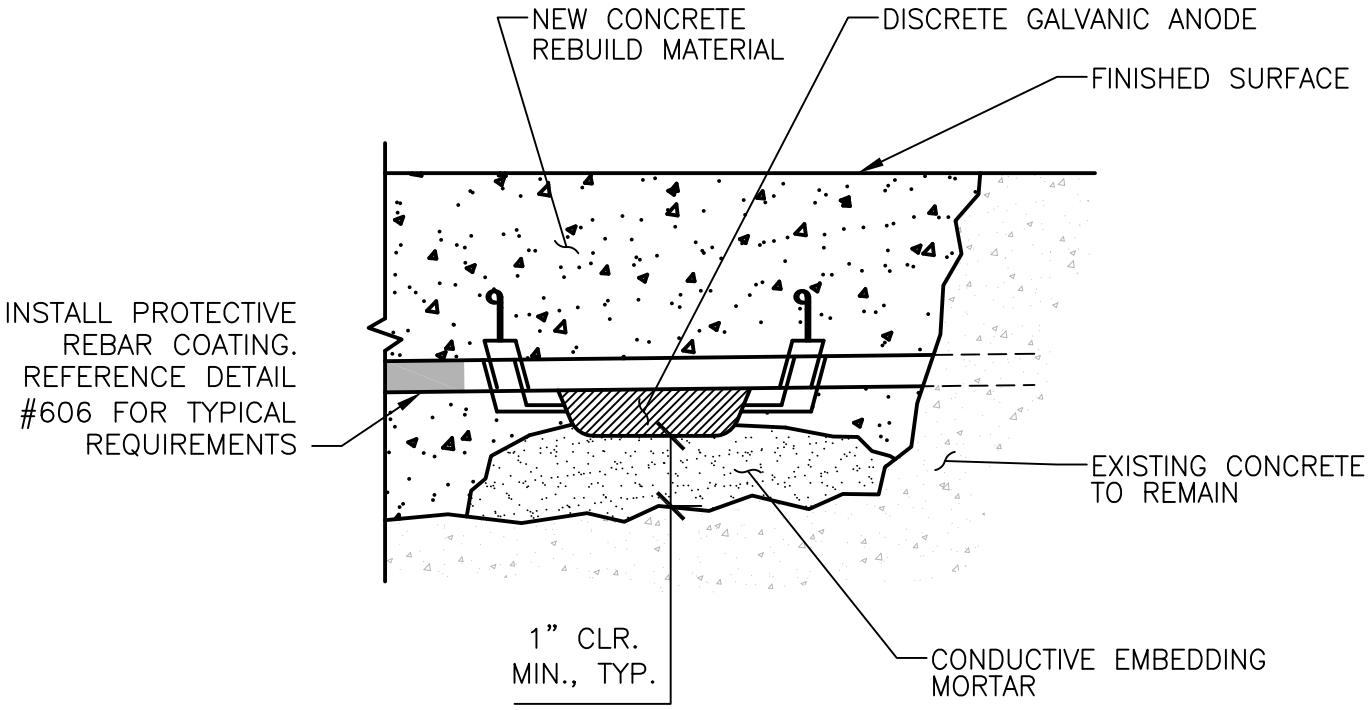

NOTES:

1. CONDUCTIVE BEDDED MORTAR SHALL BE INSTALLED FOR ANODES WHEN NEW CONCRETE REBUILD MATERIAL ELECTRICAL RESISTIVITY IS GREATER THAN 15,000 OHM-CM.
2. GALVANIC ANODE SIZES AND SHAPES MAY VARY.

NOT TO SCALE

HRSD	STANDARD DESIGN DETAIL	DRAWING NO. 604
		SHEET 1 OF 1
	CONDUCTIVE MORTAR BRIDGE FOR USE WITH HIGH RESISTIVITY REPAIR MORTARS	DATE 1/2021

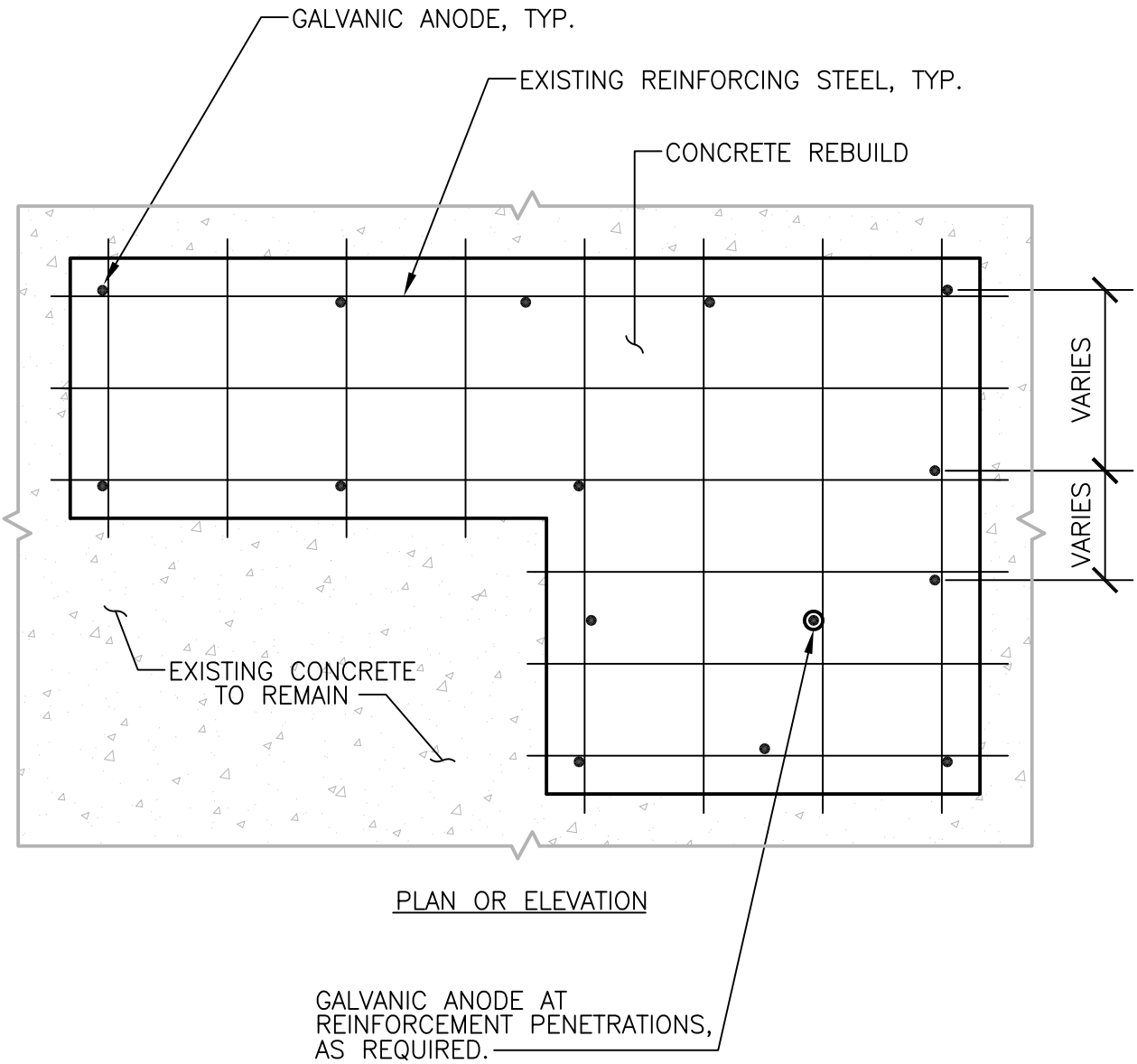

PLAN OR ELEVATION

NOTES:

1. REFERENCE SPECIFICATION 03700 FOR CONCRETE REBUILD INFORMATION NOT OTHERWISE SHOWN.
2. GALVANIC ANODE SPACING SHALL BE IN ACCORDANCE WITH SPECIFICATION REQUIREMENTS.
3. SEE DETAIL #606 FOR TYPICAL ANODE CONNECTION DETAILS.

NOT TO SCALE

HRSD	STANDARD DESIGN DETAIL	DRAWING NO. 605
		SHEET 1 OF 1
	TYPICAL GALVANIC ANODE LAYOUT	DATE 1/2021

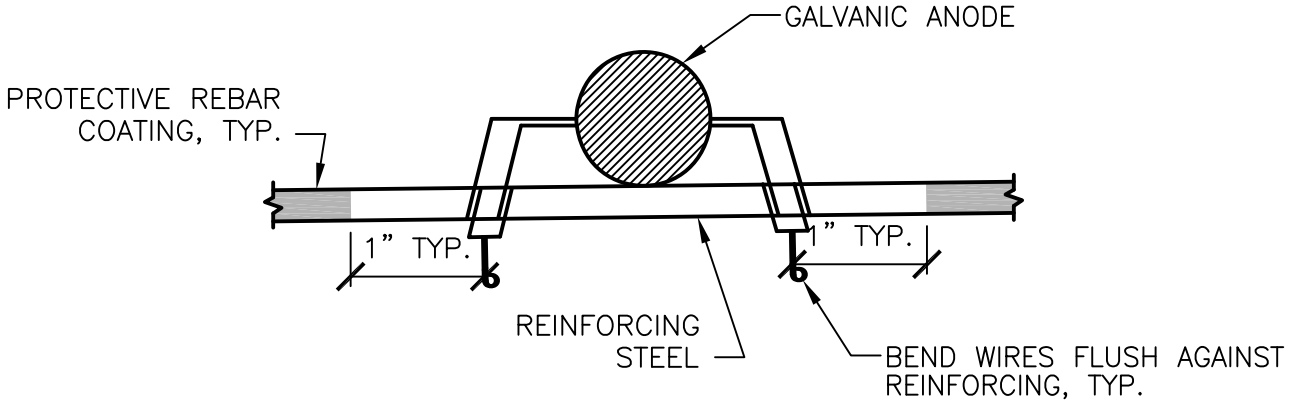

TYPICAL INSTALLATION TO SIDE REBAR

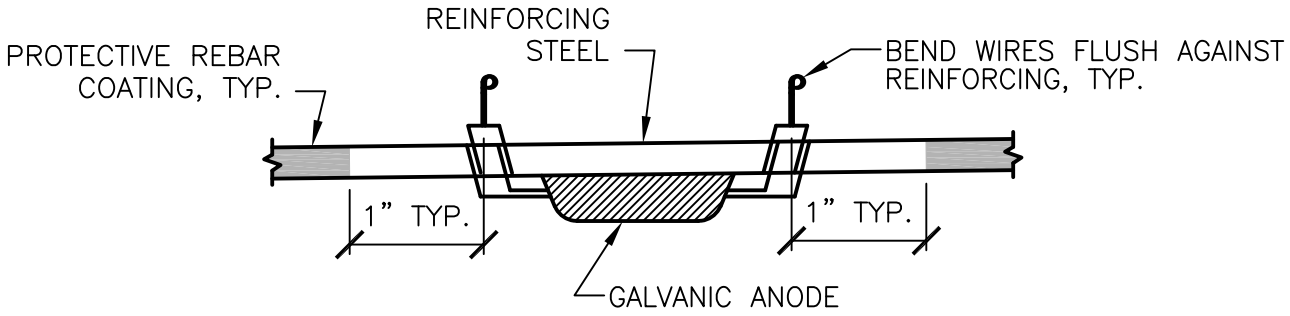

TYPICAL INSTALLATION ABOVE/BELOW REBAR

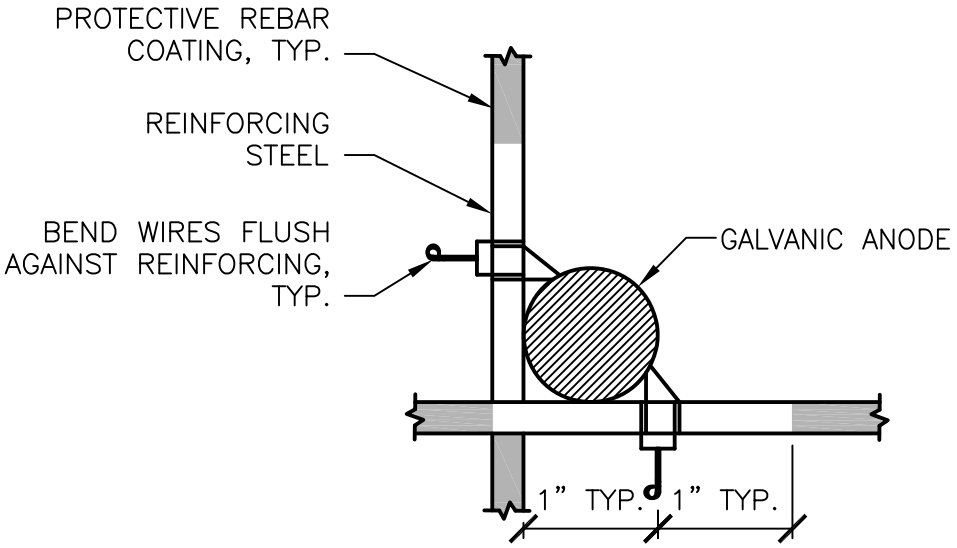

TYPICAL INSTALLATION AT REBAR INTERSECTION

NOTES:

1. GALVANIC ANODE SIZES AND SHAPES MAY VARY.

NOT TO SCALE

HRSD	STANDARD DESIGN DETAIL	DRAWING NO. 606
		SHEET 1 OF 1
	TYPICAL GALVANIC ANODE CONNECTIONS	DATE 1/2021

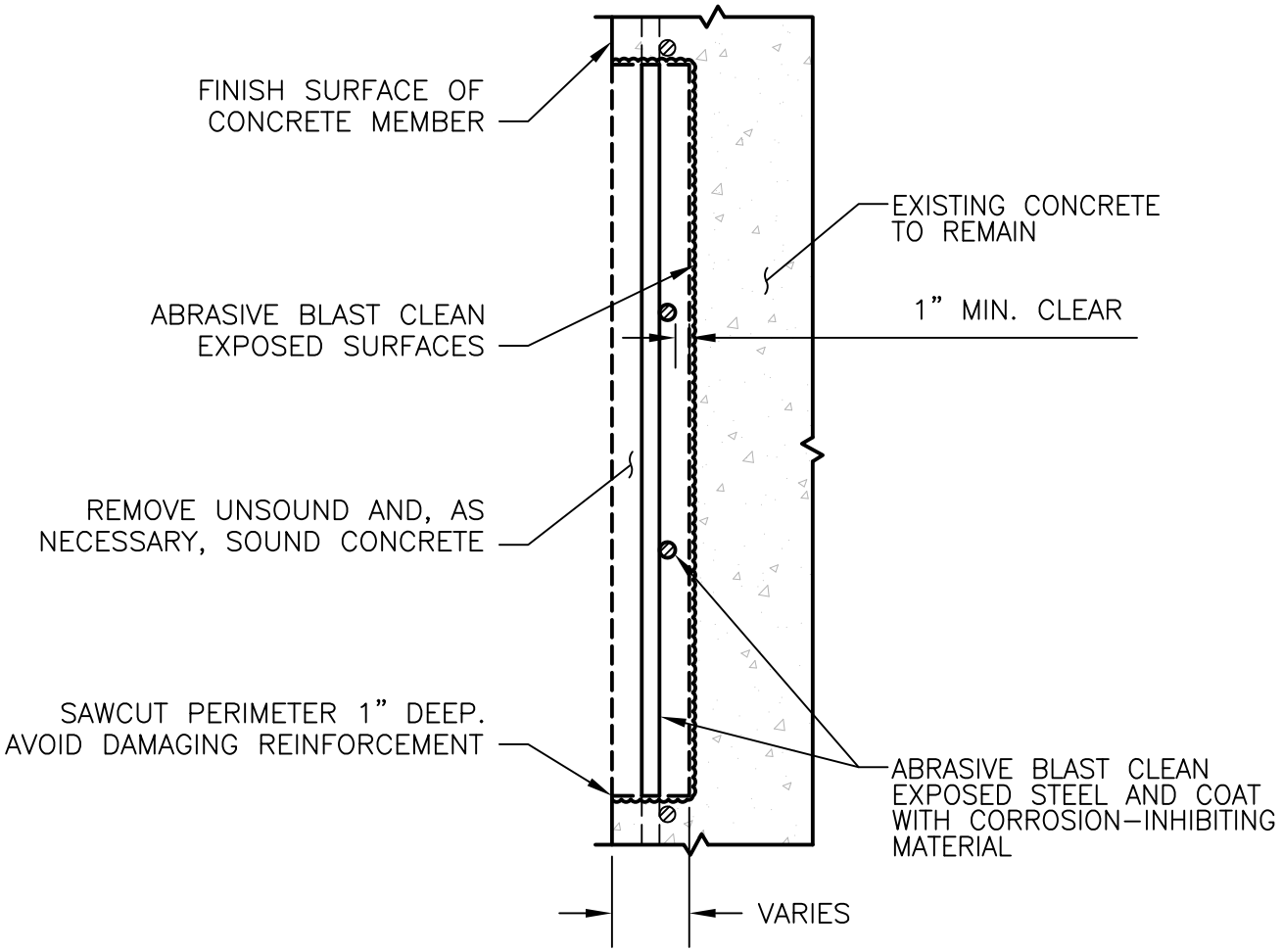

NOT TO SCALE

HRSD	STANDARD DESIGN DETAIL	DRAWING NO. 626
		SHEET 1 OF 1
	REMOVAL OF UNSOUND CONCRETE TYPICAL SECTION	DATE 1/2021

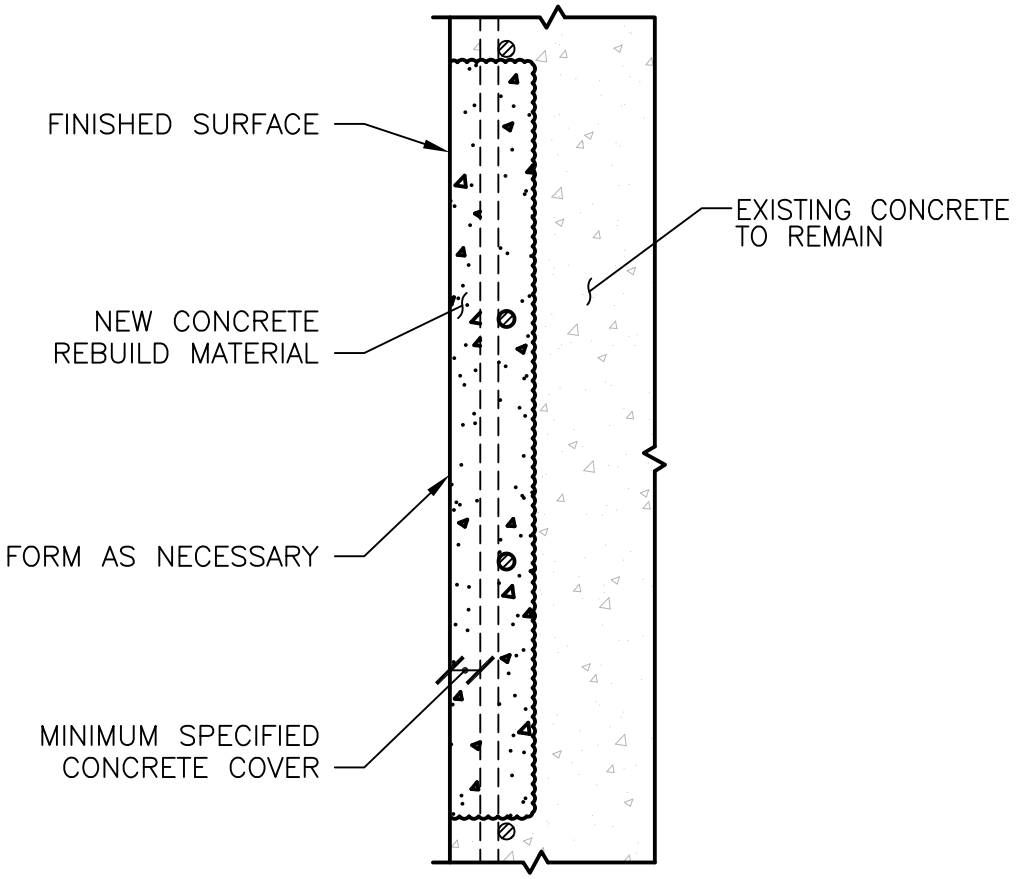

NOTES:

1. GALVANIC ANODES NOT SHOWN FOR CLARITY. REFER TO SPECIFICATION 03800 FOR REQUIREMENTS.

NOT TO SCALE

HRSD	STANDARD DESIGN DETAIL	DRAWING NO. 627
		SHEET 1 OF 1
	CONCRETE REBUILD TYPICAL SECTION	DATE 1/2021

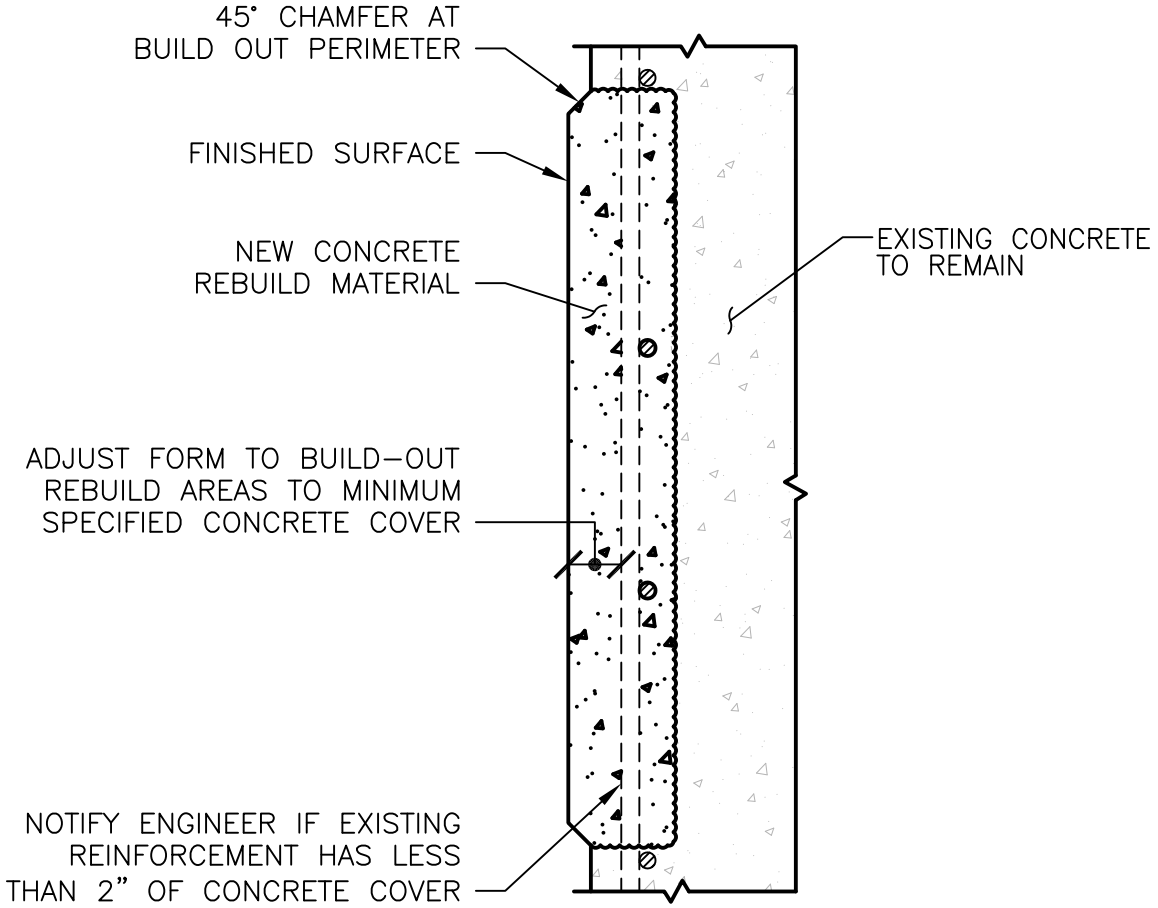

NOTES:

1. GALVANIC ANODES NOT SHOWN FOR CLARITY. REFER TO SPECIFICATION 03800 FOR REQUIREMENTS.

NOT TO SCALE

HRSD	STANDARD DESIGN DETAIL	DRAWING NO. 628
		SHEET 1 OF 1
	CONCRETE REBUILD TO PROVIDE MINIMUM COVER TYPICAL SECTION	DATE 1/2021

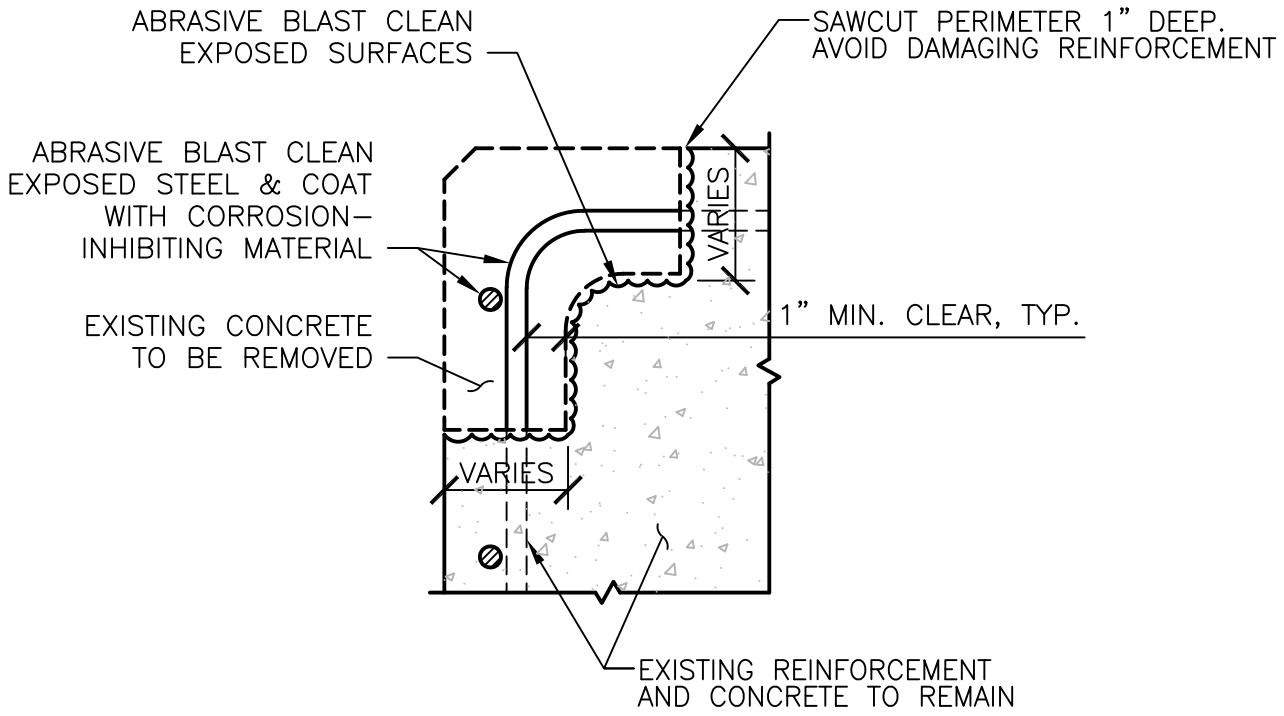

NOTES:

1. GALVANIC ANODES NOT SHOWN FOR CLARITY. REFER TO SPECIFICATION 03800 FOR REQUIREMENTS.

NOT TO SCALE

HRSD	STANDARD DESIGN DETAIL	DRAWING NO. 629
		SHEET 1 OF 1
	REMOVAL OF UNSOUND CONCRETE TYPICAL CORNER SECTION	DATE 1/2021

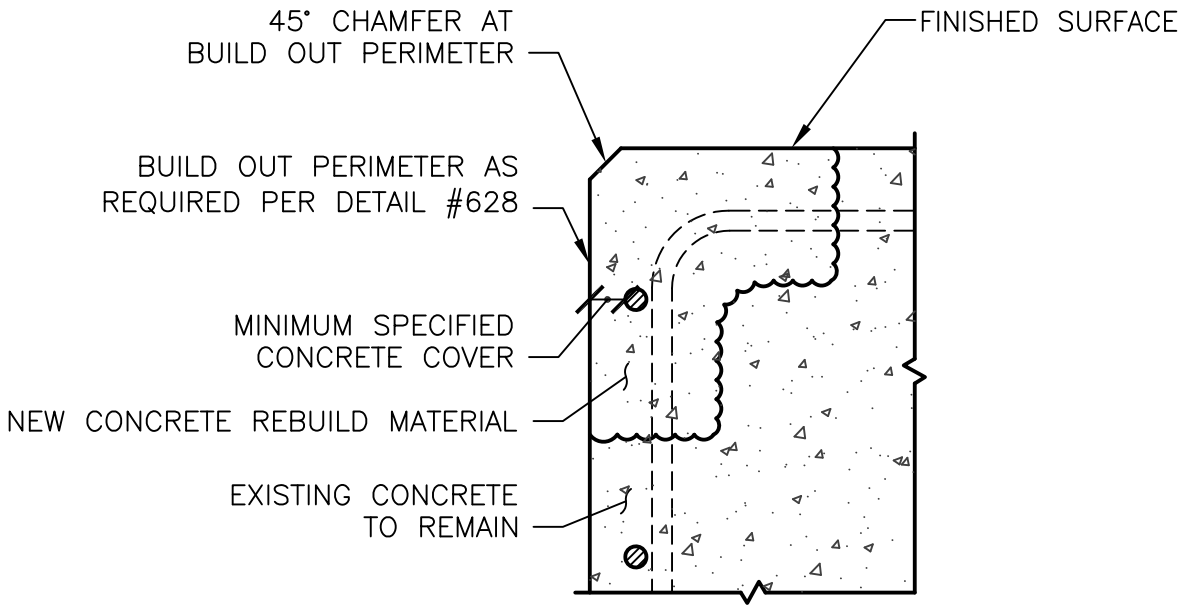

NOTES:

1. GALVANIC ANODES NOT SHOWN FOR CLARITY. REFER TO SPECIFICATION 03800 FOR REQUIREMENTS.

NOT TO SCALE

HRSD	STANDARD DESIGN DETAIL	DRAWING NO. 630
		SHEET 1 OF 1
	CONCRETE REBUILD TYPICAL CORNER SECTION	DATE 1/2021

10% SECTION LOSS

BAR NO.	DIAMETER IN.	AREA IN.^{2}	BAR DIAMETER WITH 10% SECTION LOSS (IN.)	
			CIRCUMFERENTIAL LOSS	ONE – SIDED LOSS
3	0.375	0.110	0.356	0.315
4	0.500	0.196	0.474	0.420
5	0.625	0.307	0.593	0.525
6	0.750	0.442	0.712	0.625
7	0.875	0.601	0.830	0.735
8	1.000	0.785	0.949	0.835
9	1.128	0.999	1.070	0.945
10	1.270	1.267	1.205	1.060
11	1.410	1.561	1.338	1.180

CIRCUMFERENTIAL LOSS

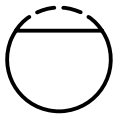

ONE – SIDED LOSS

HRSD

STANDARD DESIGN DETAIL

REINFORCING SECTION LOSS TABLE

DRAWING NO. 631

SHEET 1 OF 1

DATE 1/2021

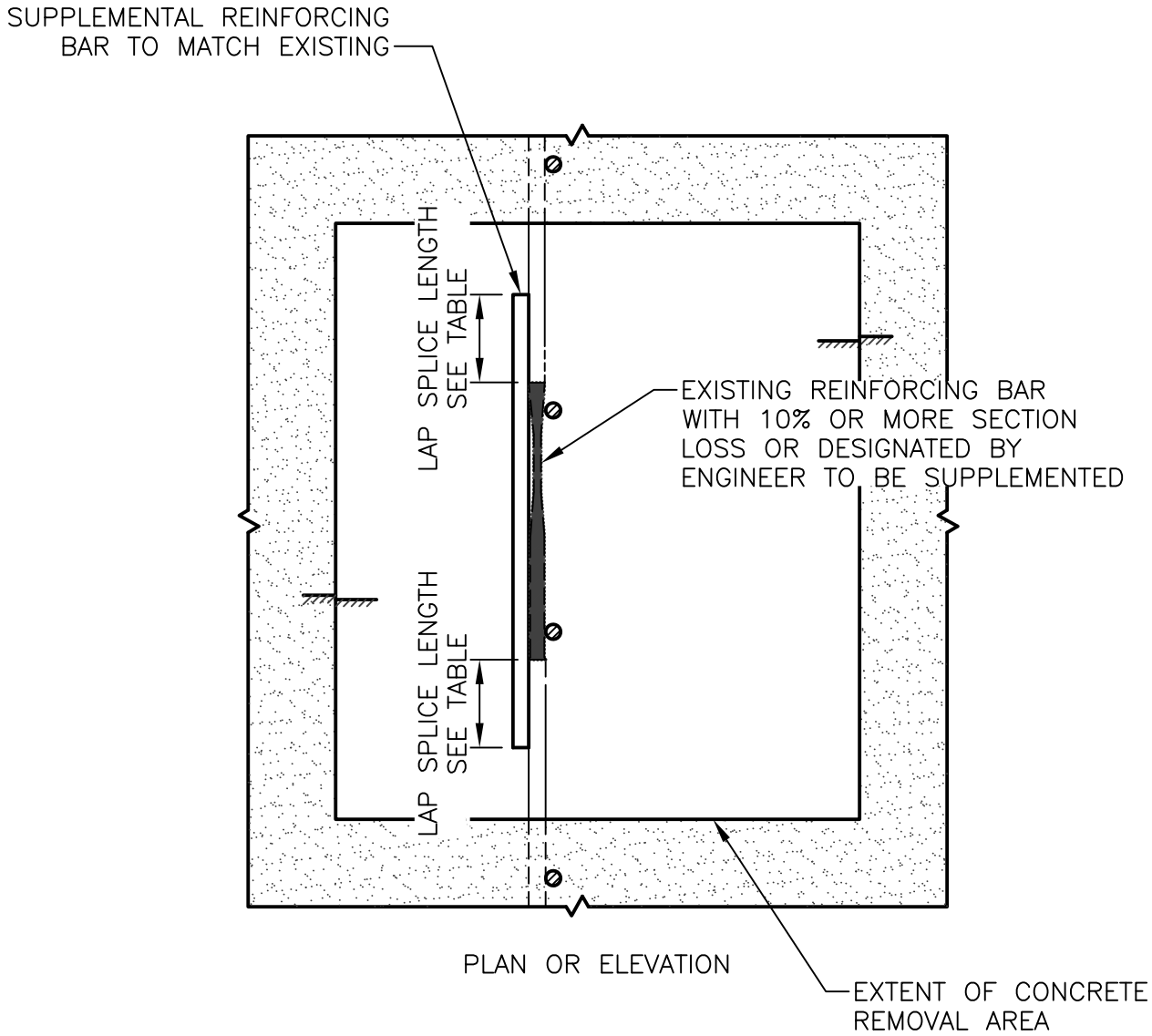

NOT TO SCALE

HRSD	STANDARD DESIGN DETAIL	DRAWING NO. 632
		SHEET 1 OF 1
	LAP SPLICE – OPTION 1	DATE 1/2021

TENSION LAP LENGTH – CLASS B SPLICE – TOP & BOTTOM BARS
(GRADE 60 UNCOATED BARS & NORMAL WEIGHT CONCRETE)

BAR NO.	fc=4,000PSI		fc=5,000PSI	
	TOP	BOT	TOP	BOT
3	15"	12"	13"	12"
4	20"	15"	18"	14"
5	24"	19"	22"	17"
6	29"	22"	26"	20"
7	42"	33"	38"	29"
8	48"	37"	43"	33"
9	60"	46"	54"	41"
10	74"	57"	66"	51"
11	89"	68"	79"	61"

NOTES:

1. THIS TABLE IS BASED ON ACI 318-11, EQUATION 12-1 WITH A MINIMUM CLEAR COVER OF 2 INCHES AND MINIMUM CENTER-TO-CENTER BAR SPACING OF 5 INCHES.
2. "TOP" BARS ARE HORIZONTAL REINFORCING BARS WITH MORE THAN 12 INCHES OF FRESH CONCRETE CAST BELOW THE BARS AT THE DEVELOPMENT LENGTH. ALL OTHER BARS ARE CONSIDERED "BOT" BARS.
3. FOR EPOXY COATED OR ZINC AND EPOXY DUAL COATED BARS, MULTIPLY THE TABLE VALUES BY 1.5 FOR BOTTOM BARS, OR 1.3 FOR TOP BARS. IF THE CONCRETE COVER IS AT LEAST 3X THE BAR DIAMETER AND CLEAR SPACING AT LEAST 6X THE BAR DIAMETER, MULTIPLY VALUES BY 1.2.
4. FOR CLASS A SPLICE, DIVIDE VALUES BY 1.3.
5. FOR LIGHTWEIGHT CONCRETE, MULTIPLY VALUES BY 1.33.

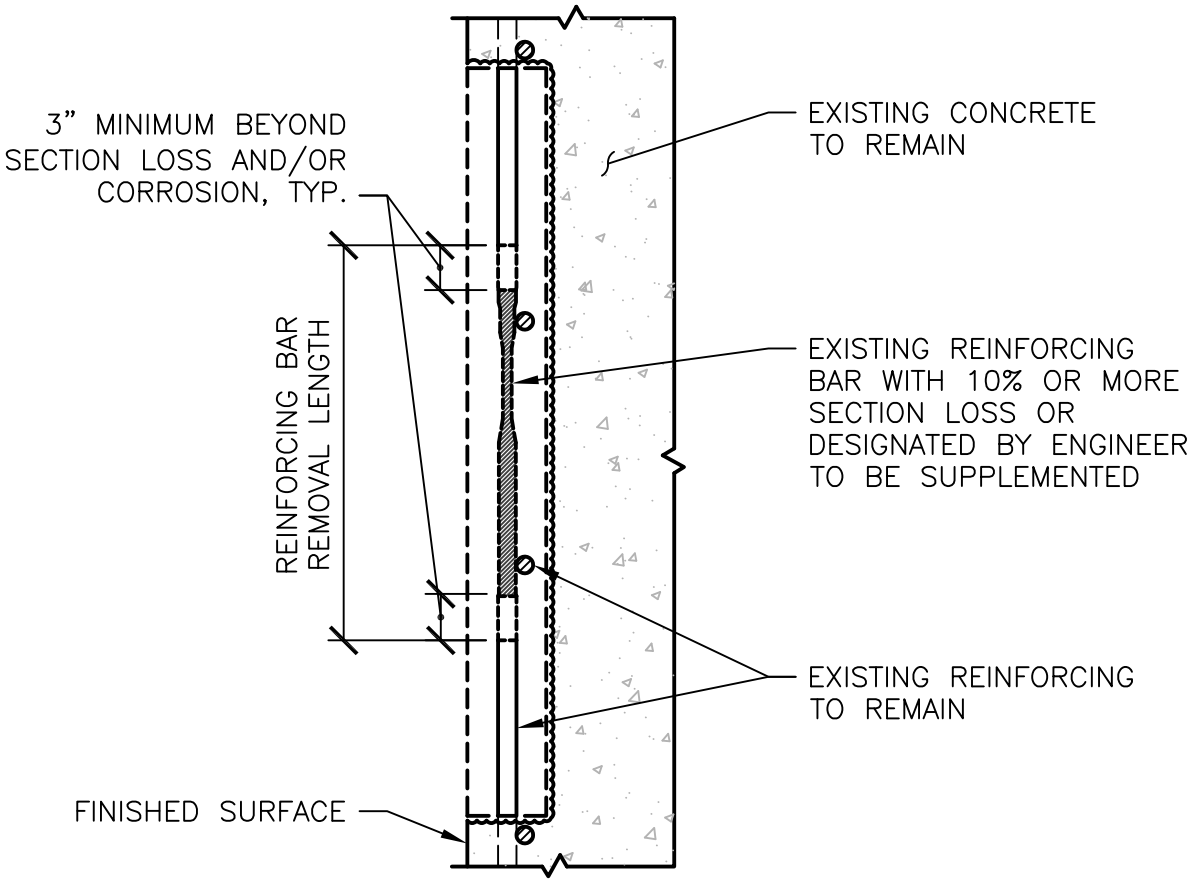

NOT TO SCALE

HRSD	STANDARD DESIGN DETAIL	DRAWING NO. 634
		SHEET 1 OF 1
	MECHANICAL SPLICE – OPTION 2 TYPICAL REMOVAL SECTION	DATE 1/2021

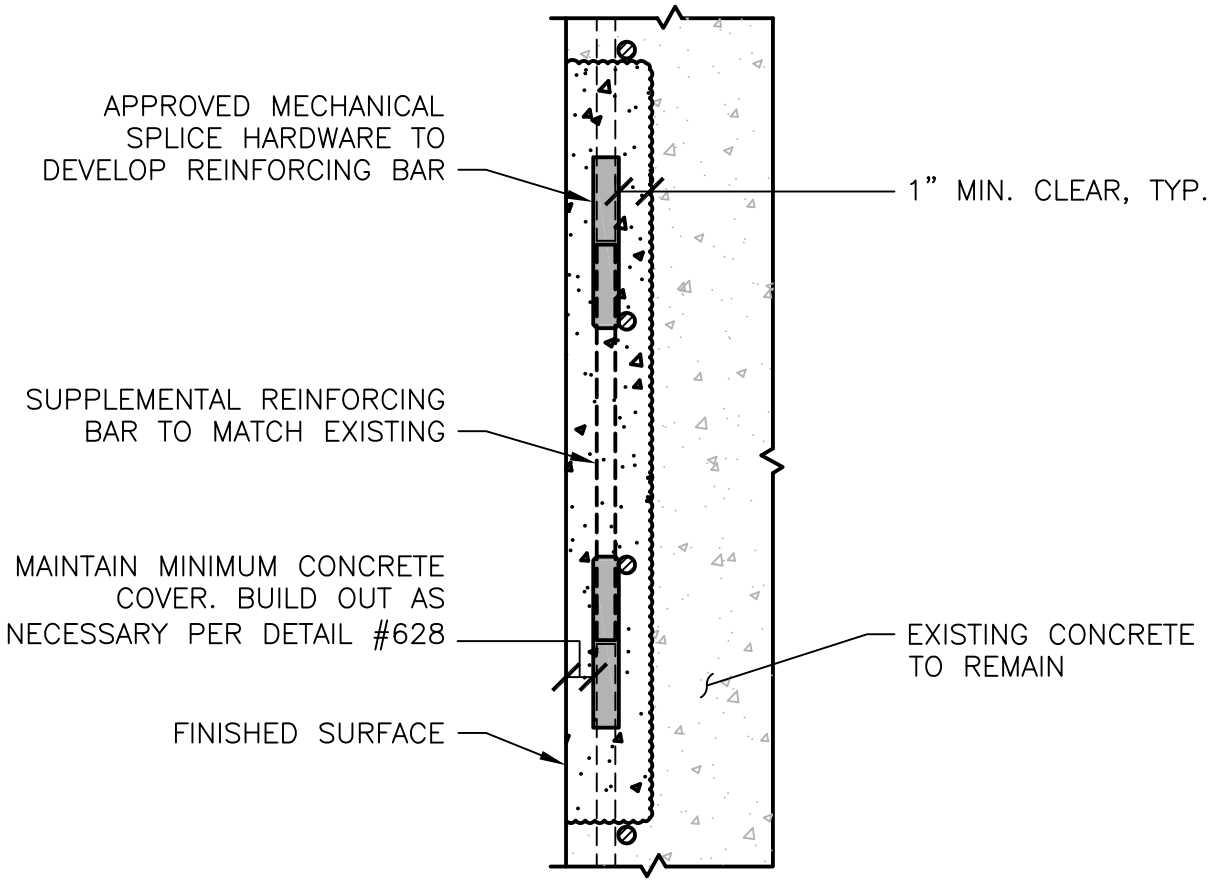

NOTES:

1. GALVANIC ANODES NOT SHOWN FOR CLARITY. REFER TO SPECIFICATION 03800 FOR REQUIREMENTS.

NOT TO SCALE

HRSD	STANDARD DESIGN DETAIL	DRAWING NO. 635
	MECHANICAL SPLICE – OPTION 2 TYPICAL REBUILD SECTION	SHEET 1 OF 1 DATE 1/2021

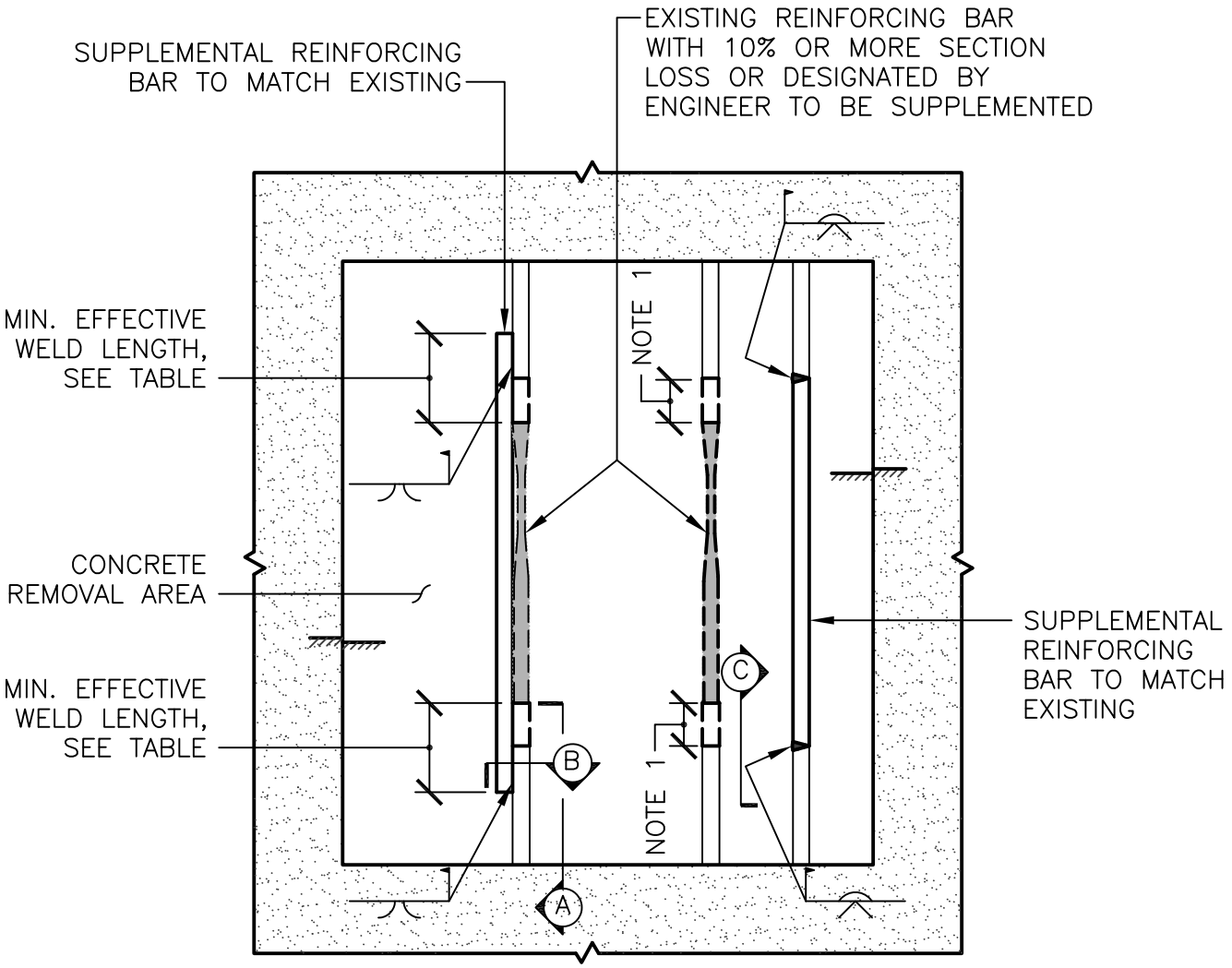

PLAN OR ELEVATION

NOTE 1: CUT BAR 3 INCHES MINIMUM BEYOND SECTION LOSS AND/OR CORROSION AND REMOVE

NOTE 2: SEE DETAILS 637 & 638 FOR SECTIONS

NOTE 3: GALVANIC ANODES NOT SHOWN FOR CLARITY. REFER TO SPECIFICATION 03800 FOR REQUIREMENTS.

NOT TO SCALE

HRSD	STANDARD DESIGN DETAIL	DRAWING NO. 636
		SHEET 1 OF 1
	WELD SPLICE – OPTION 3	DATE 1/2021

GRIND ALL EDGES SMOOTH
AFTER WELDING, TYP

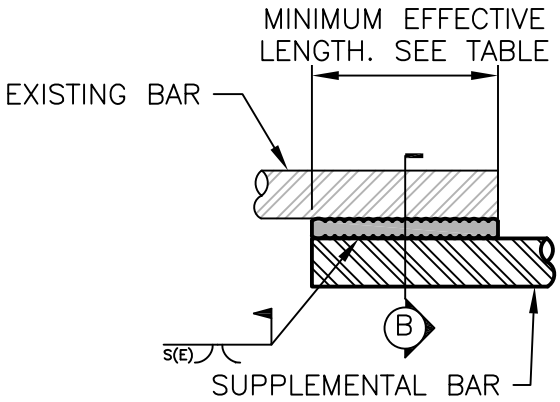

SECTION A – FLARE V – GROOVE WELD SPLICE

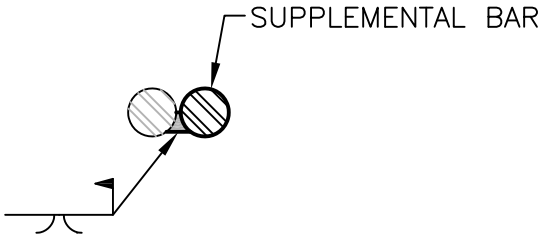

SECTION B

WELD SPLICE LENGTHS

BAR NO.	MINIMUM EFFECTIVE WELD LENGTH, in.	BAR RADIUS, S, in.
3	3.5	0.188
4	4.5	0.250
5	5.5	0.313
6	7.0	0.375
7	8.0	0.438
8	9.0	0.500
9	10.0	0.563
10	11.5	0.625
11	12.5	0.688

E–EFFECTIVE THROAT, 0.65
BASED ON E70XX ELECTRODES

NOT TO SCALE

HRSD

STANDARD DESIGN DETAIL

WELD SPLICE DETAILS – OPTION 3

DRAWING NO. 637

SHEET 1 OF 1

DATE 1/2021

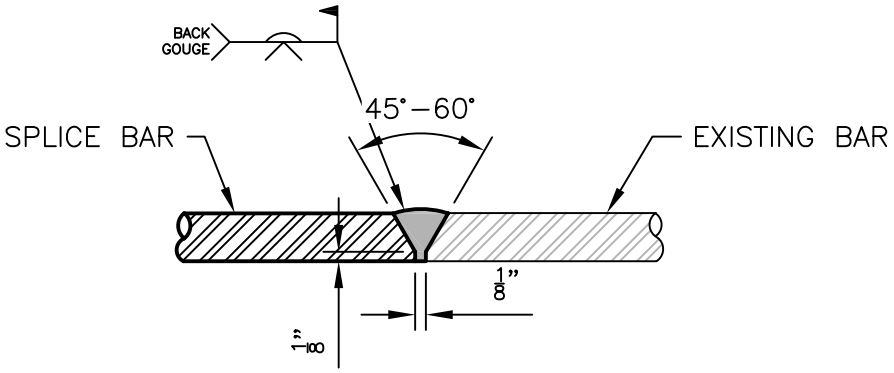

SECTION C – SINGLE V – GROOVE WELD SPLICE

NOT TO SCALE

HRSD	STANDARD DESIGN DETAIL	DRAWING NO. 638
		SHEET 1 OF 1
	WELD SPLICE DETAILS – OPTION 3	DATE 1/2021

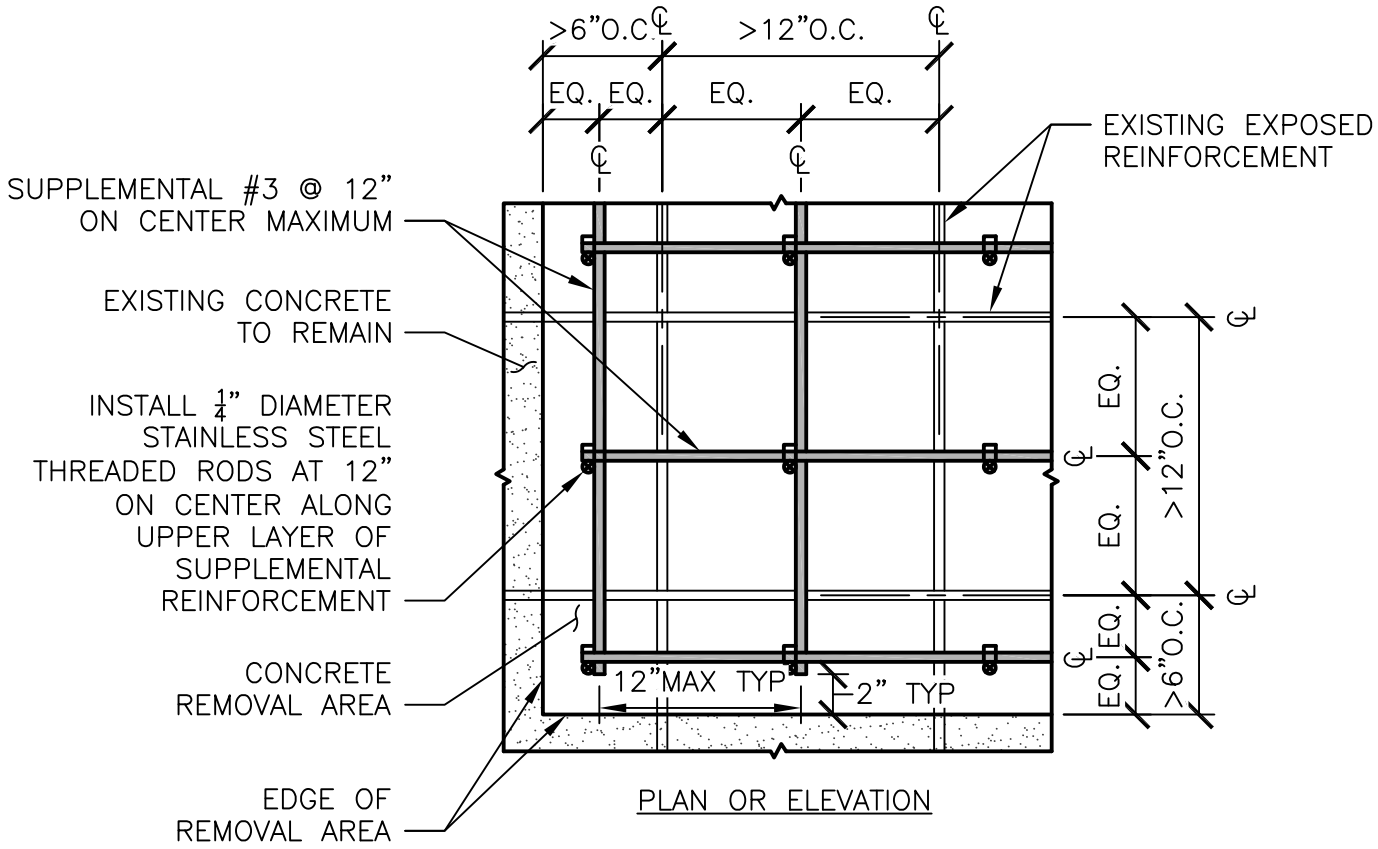

NOTES:
PROVIDE SUPPLEMENTAL REINFORCEMENT FOR EXISTING REINFORCEMENT THAT:

1. IS LOCATED 3" OR MORE BELOW NEW CONCRETE SURFACE; OR
2. HAS PROVIDED 2" MINIMUM CLEAR COVER, BUT SPACED GREATER THAN 12" O.C.
3. IS LOCATED 6" OR MORE FROM EXISTING CONCRETE TO REMAIN.

NOT TO SCALE

HRSD	STANDARD DESIGN DETAIL	DRAWING NO. 639
		SHEET 1 OF 1
	SUPPLEMENTAL REINFORCEMENT REQUIREMENTS	DATE 1/2021

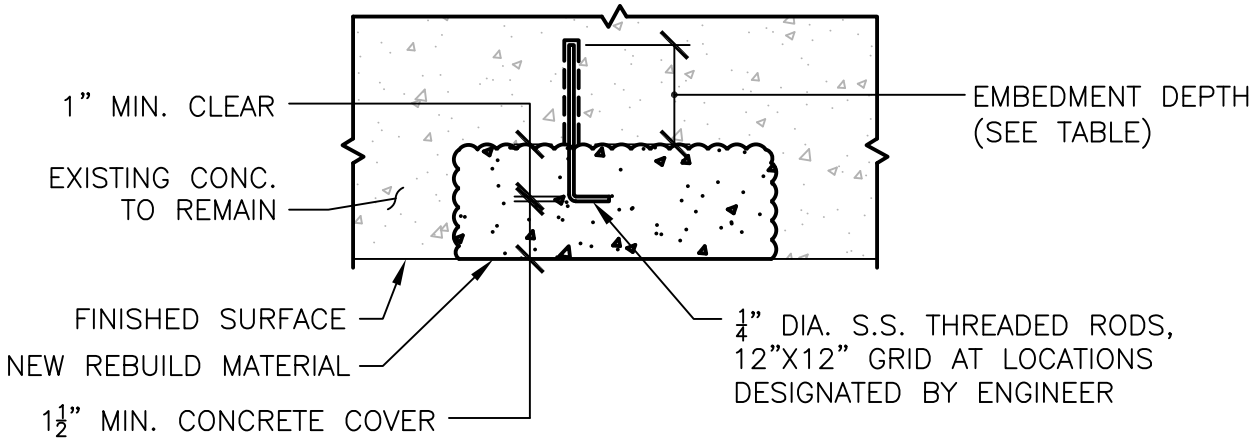

TYPICAL SECTION AT CONC. REMOVAL AREAS – VERTICAL AND OVERHEAD SURFACES

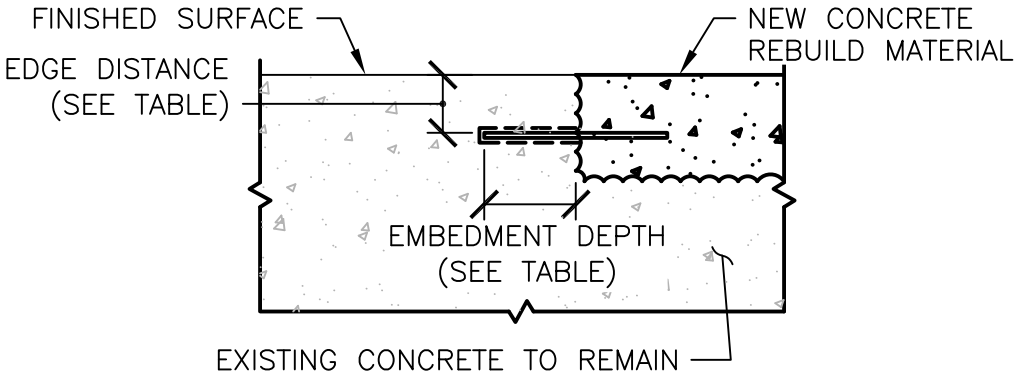

ADHESIVE–GROUTED DOWEL LAYOUT DIMENSIONS

DOWEL SIZE	ALLOWABLE TENSION LOAD PER ANCHOR, lbs	MINIMUM EMBEDMENT DEPTH, in.	MINIMUM CONCRETE THICKNESS, in.	MINIMUM EDGE DISTANCE, in.	MINIMUM SPACING, in.
¼"ø	950	3	6	4.0	8.0
#3	2,100	4	6	6.0	12.0
#4	2,800	4	6	6.0	12.0

NOTES:

1. TABLE VALUES FOR SINGLE ANCHORS IN TENSION ONLY; REINFORCING STEEL YIELD STRENGTH OF 60 KSI; THREADED RODS A276, TYPE 316, YIELD STRENGTH OF 30 KSI; HILTI HIT–HY 200 OR HILTI HIT–RE 500 V3 ADHESIVE, 4,000 PSI CONCRETE.

2. IF CONDITIONS ARE DIFFERENT THAN THOSE LISTED ABOVE, TABLE VALUES SHALL BE ADJUSTED BY A LICENSED PROFESSIONAL ENGINEER BASED ON ACTUAL DOWEL SYSTEM USED AND REQUIRED DOWEL CAPACITY.

NOT TO SCALE

HRSD	STANDARD DESIGN DETAIL	DRAWING NO. 640
		SHEET 1 OF 1
	ADHESIVE–GROUTED DOWEL LAYOUT	DATE 1/2021

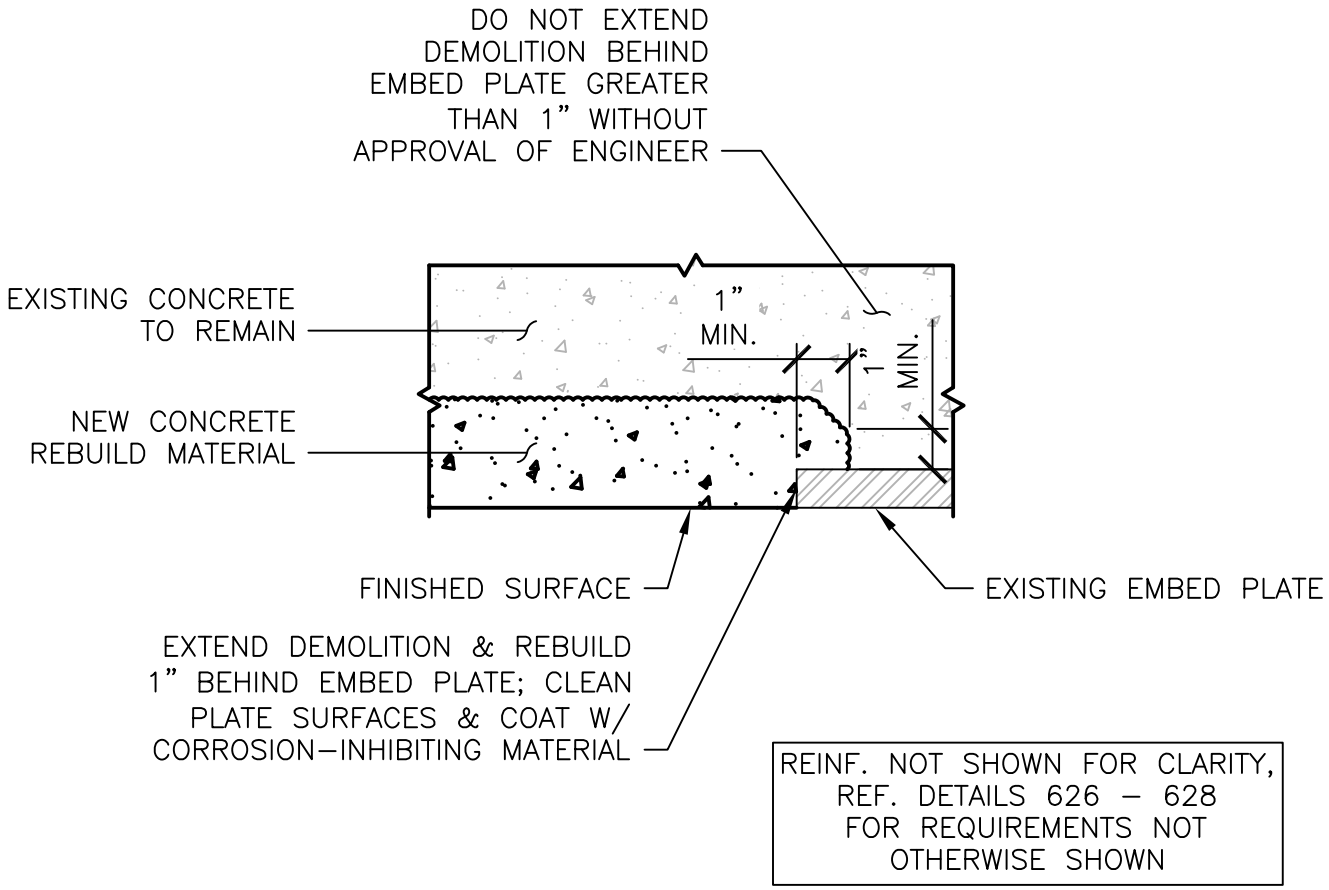

NOT TO SCALE

HRSD	STANDARD DESIGN DETAIL	DRAWING NO. 641
		SHEET 1 OF 1
	TYPICAL CONCRETE REBUILD SECTION AT EMBED PLATE	DATE 1/2021

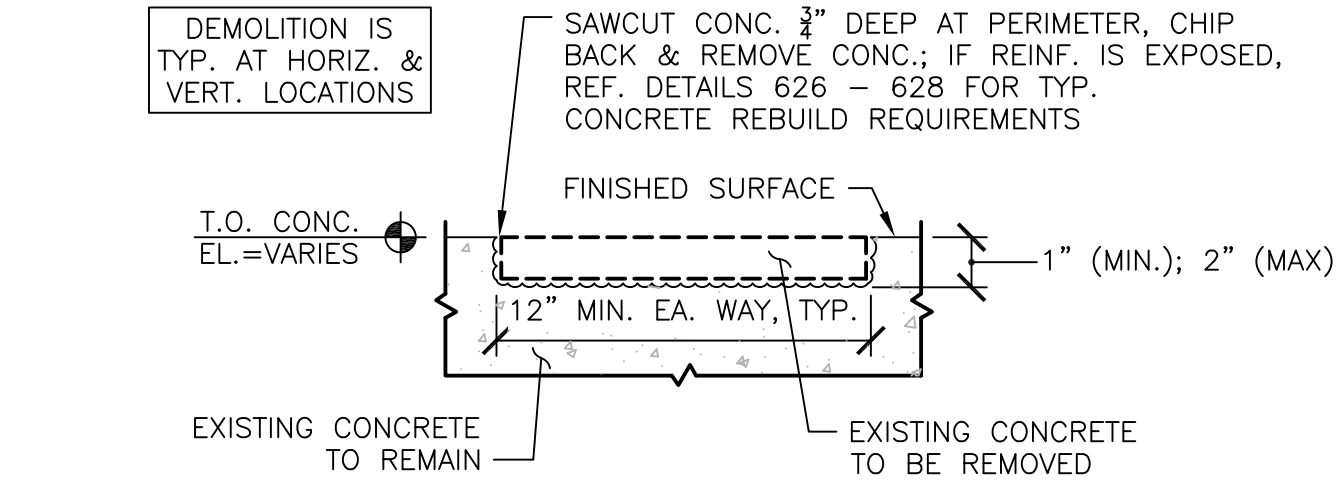

DEMOLITION

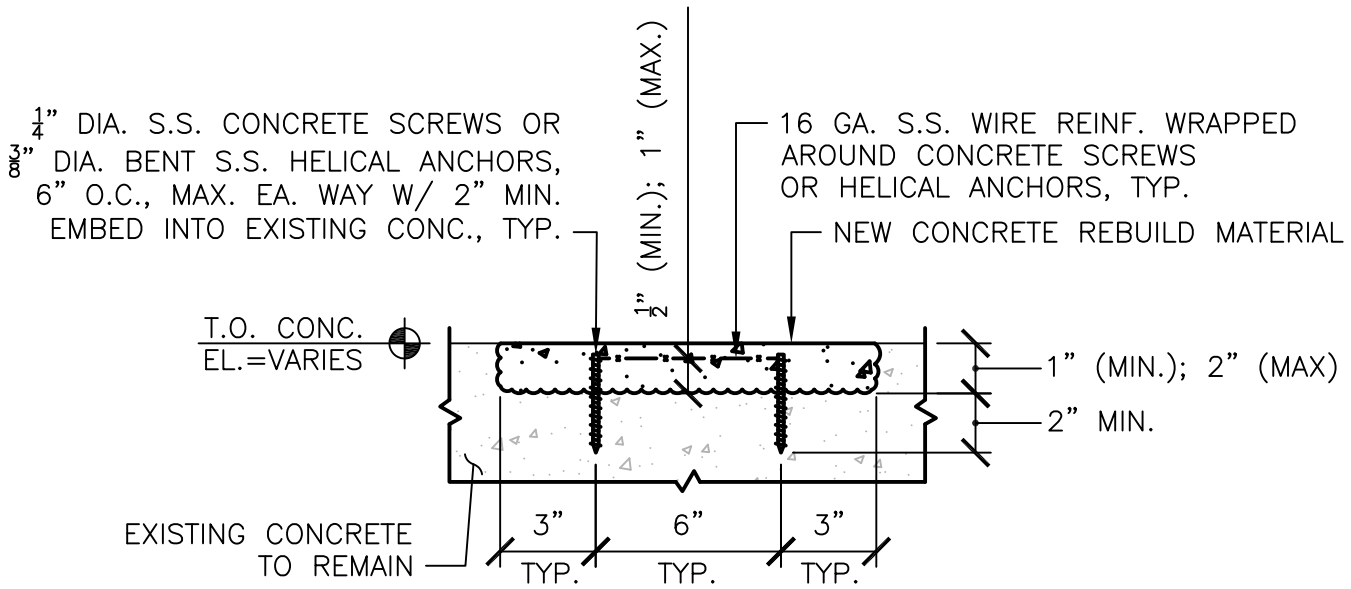

SHALLOW CONCRETE REBUILD – HORIZONTAL

NOT TO SCALE

HRSD	STANDARD DESIGN DETAIL	DRAWING NO. 642
	SHALLOW DEPTH (2" MAX) CONCRETE REBUILD HORIZONTAL	SHEET 1 OF 1
		DATE 1/2021

REF. DETAIL #642 FOR TYPICAL DEMOLITION REQUIREMENTS

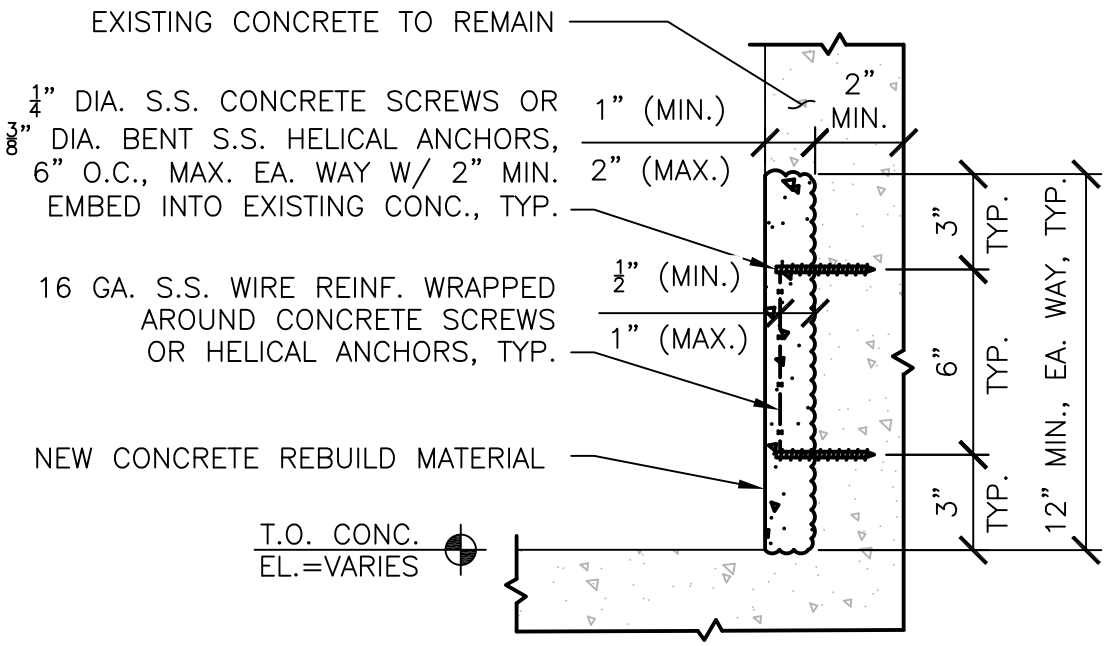

SHALLOW CONCRETE REBUILD – VERTICAL

NOT TO SCALE

HRSD	STANDARD DESIGN DETAIL	DRAWING NO. 643
	SHALLOW DEPTH (2" MAX) CONCRETE REBUILD VERTICAL	SHEET 1 OF 1
		DATE 1/2021

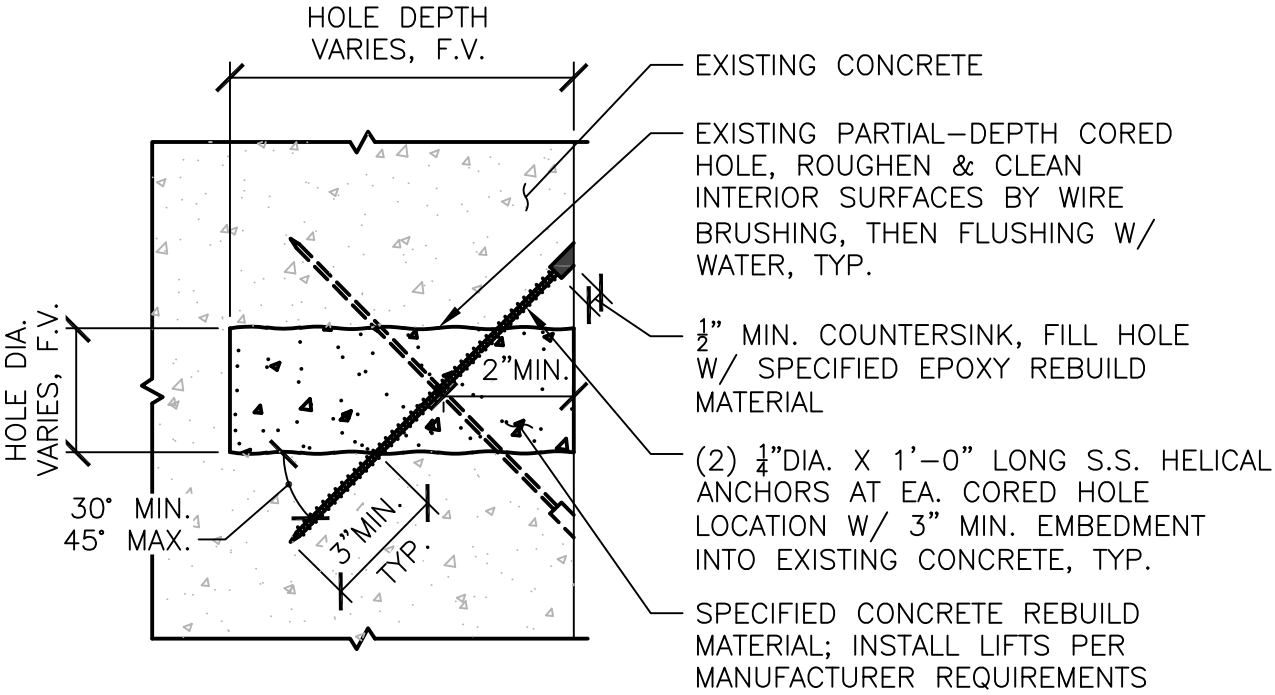

REBUILD SECTION

INSTALL ANCHORS AROUND PERIMETER OF CORED HOLE PER FIGURE BELOW, TYP.

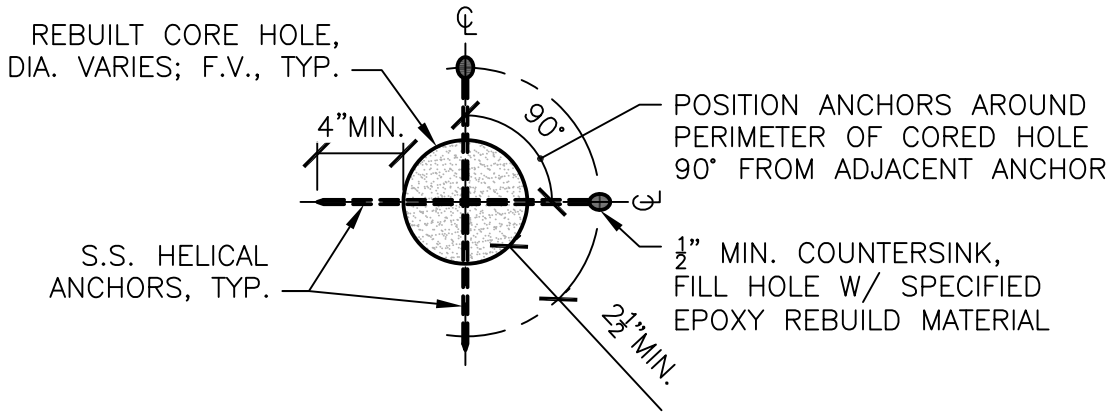

REBUILD ELEVATION

NOT TO SCALE

HRSD	STANDARD DESIGN DETAIL	DRAWING NO. 644
		SHEET 1 OF 1
	PARTIAL–DEPTH CORE HOLE CONCRETE REBUILD	DATE 1/2021

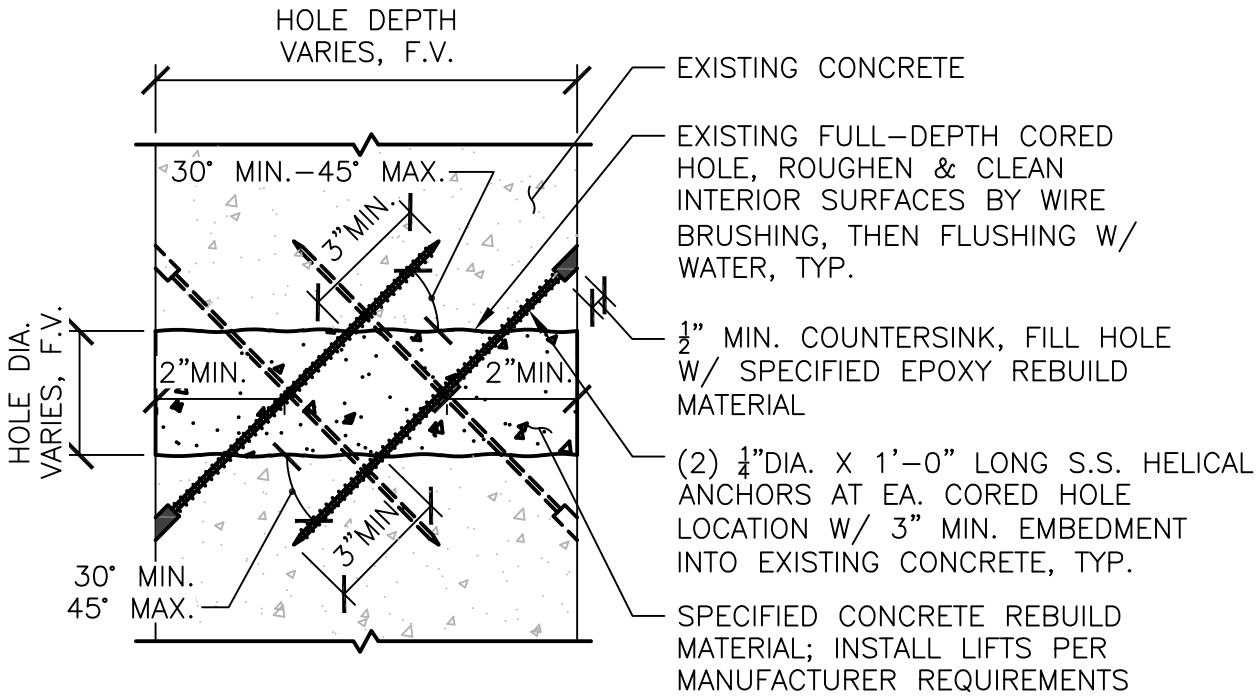

REBUILD SECTION

INSTALL ANCHORS AROUND PERIMETER OF CORED HOLE PER FIGURE BELOW, TYP.

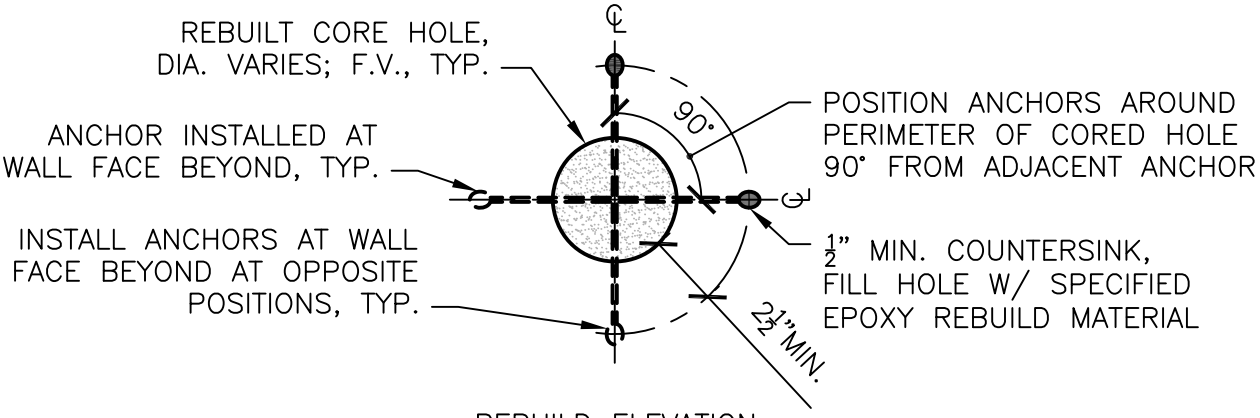

REBUILD ELEVATION

NOT TO SCALE

HRSD	STANDARD DESIGN DETAIL	DRAWING NO. 645
		SHEET 1 OF 1
	FULL–DEPTH CORE HOLE CONCRETE REBUILD	DATE 1/2021

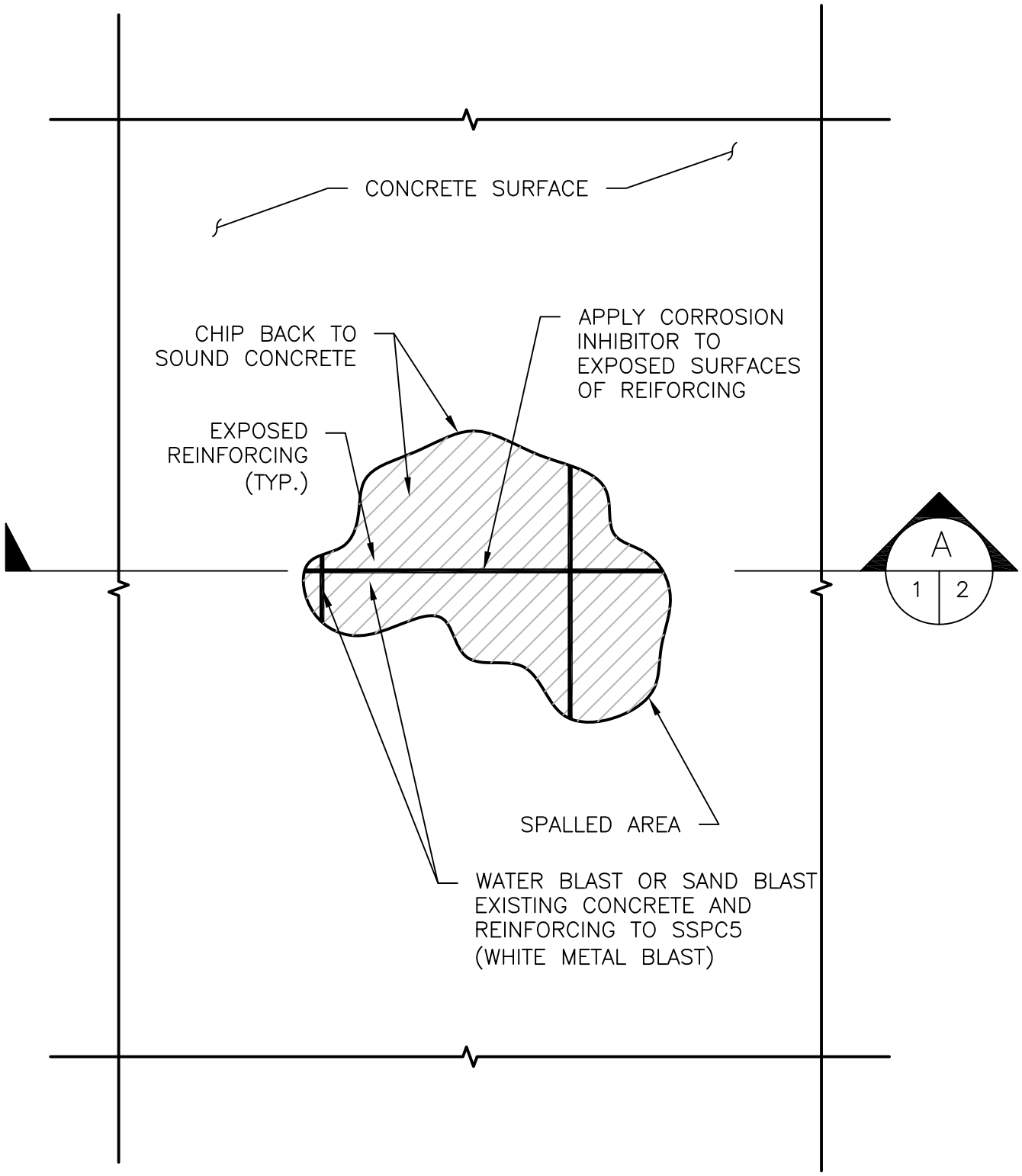

SEE DETAIL 646B FOR SECTION VIEW AND NOTES

NOT TO SCALE

HRSD	STANDARD DESIGN DETAIL	DRAWING NO. 646A
		SHEET 1 OF 2
	TYPICAL SPALL REPAIR WITH EXPOSED REINFORCING STEEL	DATE 1/2021

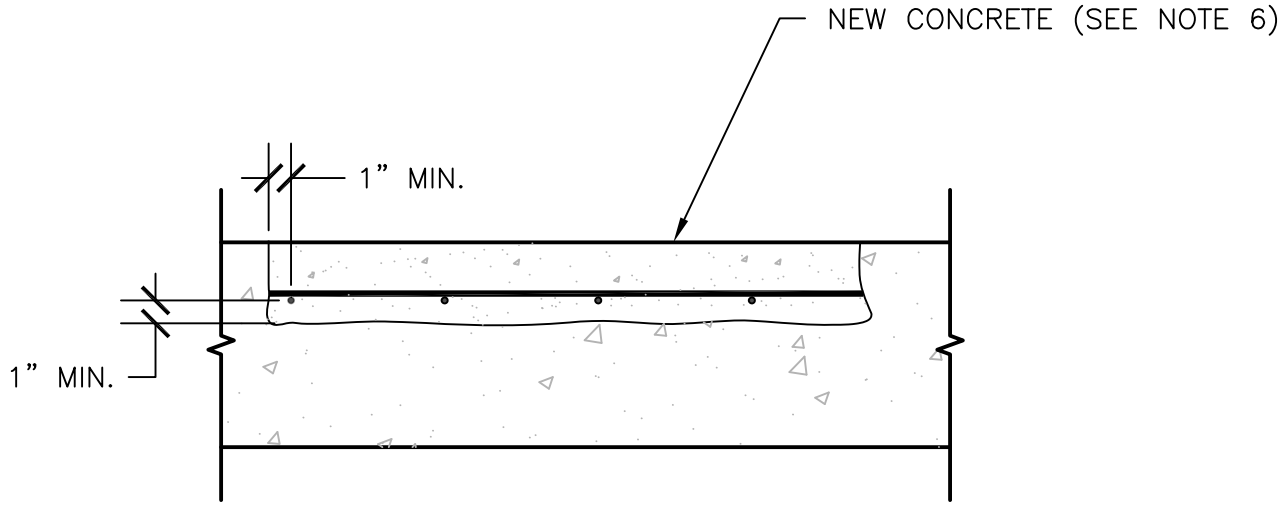

SECTION A 1 2

SCALE: NTS

NOTES:

1. IF SECTION LOSS OF REBAR IN A MEMBER (SLAB AREA, BEAM OR COLUMN) EXCEEDS 25% THIS REPAIR SHALL BE REVIEWED BY A STRUCTURAL ENGINEER.

2. WATER BLAST OR SAND BLAST EXPOSED CONCRETE AND REBAR (SSPC5 WHITE METAL BLAST) IN SPALLED AREA.

3. CHIP OUT CONCRETE AROUND EXISTING REBAR TO LEAVE A ONE INCH SPACE (MIN.) BETWEEN REBAR AND CONCRETE. CHIP BACK FURTHER IF NECESSARY TO ACHIEVE SOUND CONCRETE.

4. ROUGHEN CONCRETE SURFACE, CLEAN DEBRIS AND DIRT FROM REPAIR AREA, COAT REBAR WITH CORROSION INHIBITOR. WET CONCRETE SURFACE PRIOR TO PLACING NEW CONCRETE.

5. CORROSION INHIBITOR SHALL MEET REQUIREMENT OF ASTM C1582.

6. CONCRETE SHALL HAVE A MINIMUM COMPRESSIVE STRENGTH OF (f'c) 5000 psi AT AN AGE OF 28 DAYS. MAXIMUM WATER–CEMENT RATIO (W/C) SHALL BE 40% BY WEIGHT. CEMENT SHALL BE ASTM C150 TYPE II WITH A MAXIMUM OF 0.6% ALKALIS BY WEIGHT. CONCRETE SHALL CONTAIN 7% SILICA FUME OR 15% FLYASH AS WEIGHT PERCENT OF CEMENTITIOUS MATERIALS.

HRSD	STANDARD DESIGN DETAIL	DRAWING NO. 646B
		SHEET 2 OF 2
	TYPICAL SPALL REPAIR WITH EXPOSED REINFORCING STEEL	DATE 1/2021

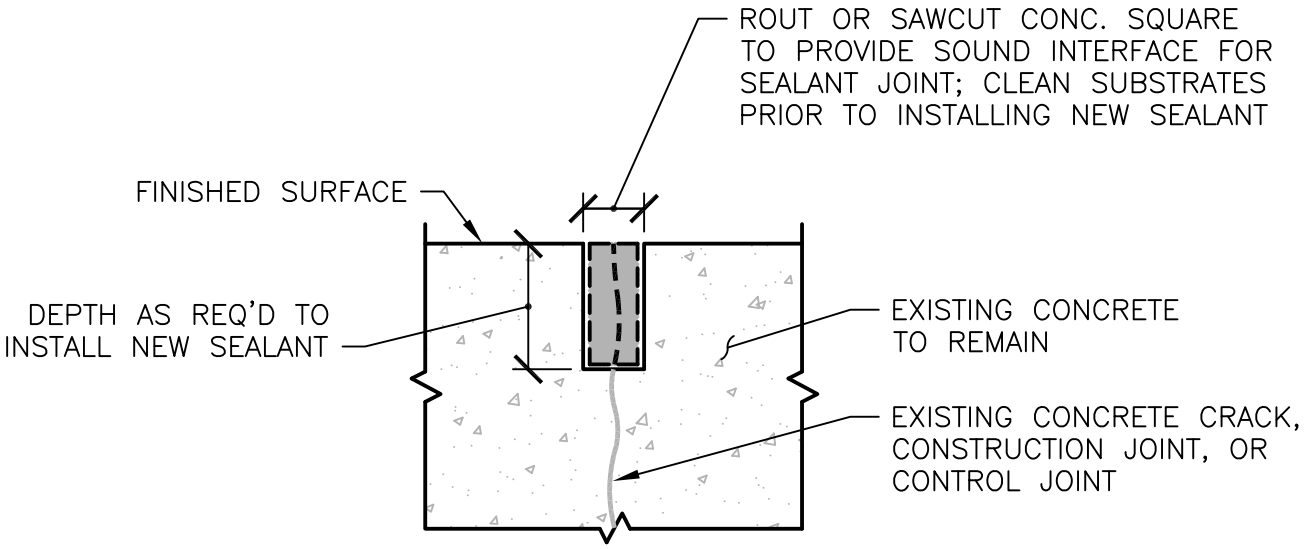

CONCRETE REMOVAL & SURFACE PREPARATION

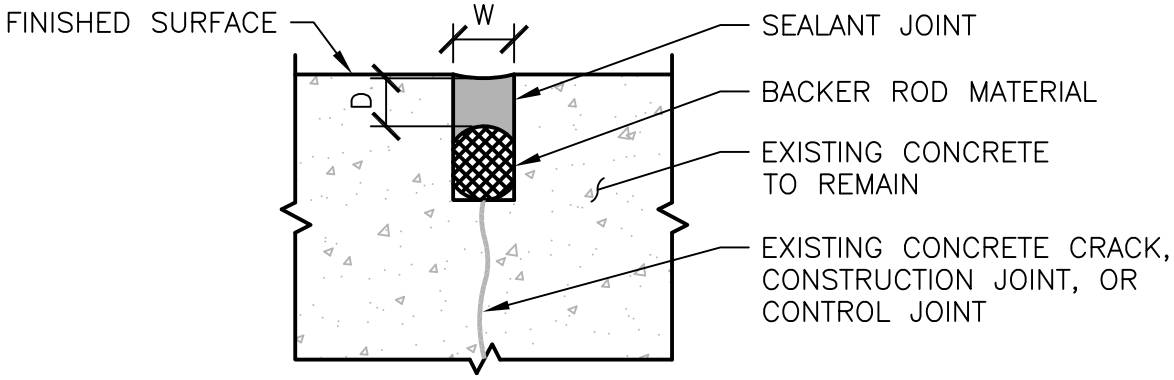

SEALANT JOINT INSTALLATION

HORIZONTAL SEALANT JOINT NOTES

1. IF $W<\frac{1}{2}$"; D=W; $\frac{1}{4}$" MIN.

2. IF $W>\frac{1}{2}$" TO 1"; $D=(\frac{1}{2})W$

3. IF $W>1$"; $D=\frac{1}{2}$"

4. ENSURE BACKER ROD DIA. IS 25%(±) LARGER THAN WIDTH OF THE JOINT, TYP.

NOT TO SCALE

HRSD	STANDARD DESIGN DETAIL	DRAWING NO. 651
		SHEET 1 OF 1
	TYPICAL SEALANT DETAILS	DATE 1/2021

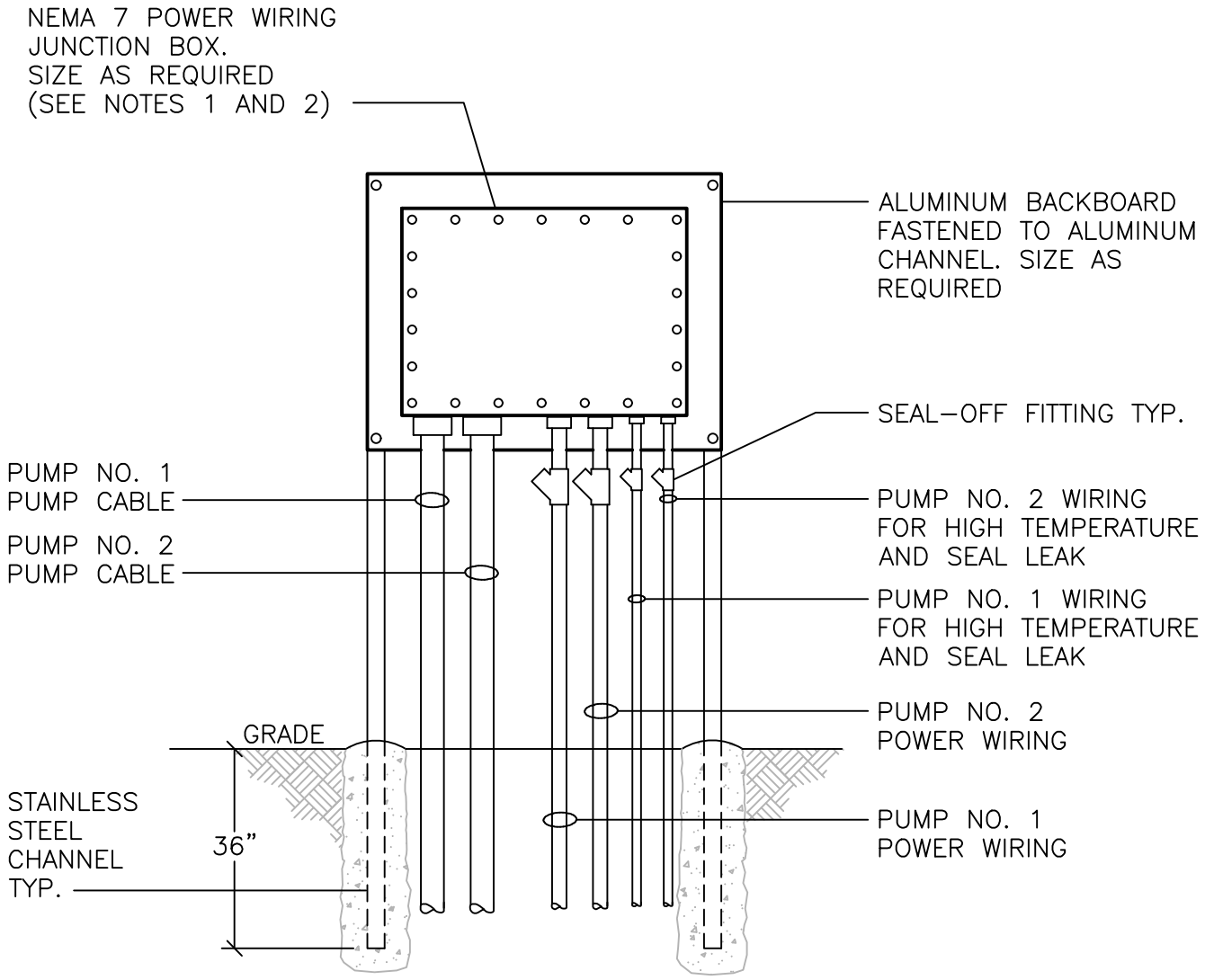

NOTES:

1. PUMP CABLE WIRES SHALL BE SPLICED IN THE POWER WIRING JUNCTION BOX USING INSULATED MECHANICAL LUGS.

2. PROVIDE A MINIMUM OF 2' OF CABLE SLACK IN THE JUNCTION BOX.

3. THE INSTRUMENT VAULT AND VALVE VAULT ARE CLASSIFIED AS A CLASS 1, DIVISION 2, GROUP D AREA IN ACCORDANCE WITH NFPA 820. THE INSTALLATION OF ALL ELECTRICAL EQUIPMENT AND CONDUIT SHALL BE PERFORMED IN ACCORDANCE WITH THIS CLASSIFICATION.

4. ALL CONDUIT PENETRATIONS THROUGH CONCRETE STRUCTURES SHALL BE INSTALLED THROUGH SLEEVED PENETRATIONS WITH MODULAR SEALS AND 316 STAINLESS STEEL HARDWARE.

NOT TO SCALE

HRSD	STANDARD DESIGN DETAIL	DRAWING NO. 700
		SHEET 1 OF 1
	WET WELL PUMP WIRING ELECTRICAL BACKBOARD DETAIL	DATE 12/2022

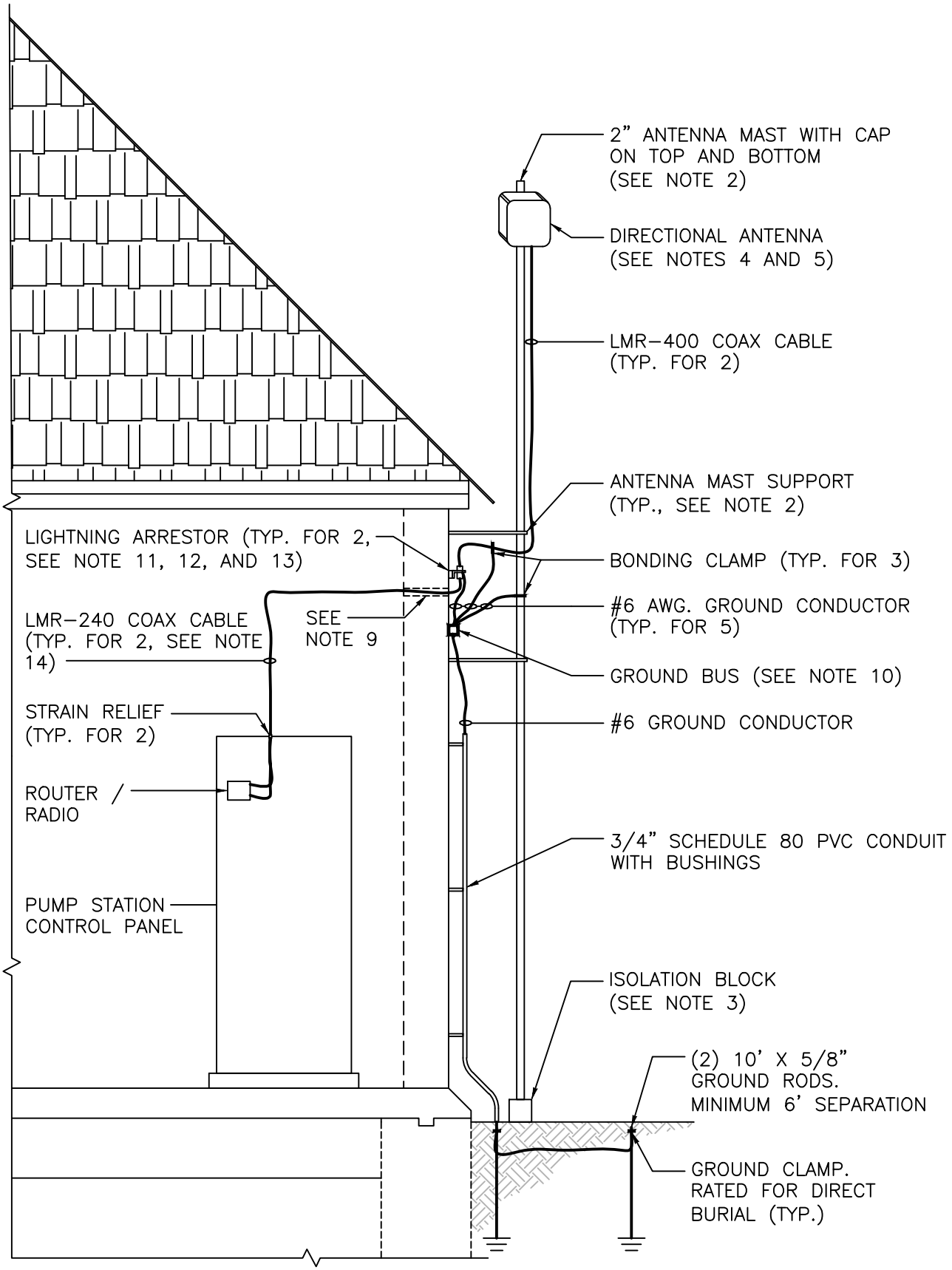

HRSD	STANDARD DESIGN DETAIL	DRAWING NO. 701A
		SHEET 1 OF 2
	ANTENNA INSTALLATION DETAIL	DATE 12/2022

NOTES:

1. ANY DEVIATIONS FROM THIS DETAIL SHALL BE COORDINATED WITH HRSD OR HRSD'S REPRESENTATIVE.

2. ALL FASTENERS AND MOUNTING HARDWARE USED FOR INSTALLATION OF ELECTRICAL ITEMS SHALL BE OF THE SAME MATERIAL, GALVANIZED STEEL OR STAINLESS STEEL.

3. GALVANIZED STEEL ANTENNA MASTS SHALL NOT COME IN DIRECT CONNECT WITH THE GROUND. PROVIDE A BLOCK FOR ISOLATION IF REQUIRED.

4. DIRECTIONAL ANTENNA SHALL BE INSTALLED AT THE PROPER HEIGHT AND AZIMUTH ACCORDING TO THE SITE SURVEY.

5. DIRECTIONAL ANTENNA SHALL BE MOBILE MARK #PND10-700/2700.

6. COAX CABLE CONNECTORS SHALL BE INSTALLED PER MANUFACTURER REQUIREMENTS. SOLDERED CONNECTIONS ARE PREFERRED, CRIMP AND CAPTIVATED CONNECTIONS WILL BE ACCEPTED WHEN NECESSARY.

7. COAX CABLE CONNECTORS SHALL BE WEATHERPROOFED USING HEAT SHRINK OR COLD SHRINK TUBING, ELECTRICAL TAPE IS NOT ACCEPTABLE.

8. SUPPORT CONDUIT, COAX CABLE, AND GROUND CONDUCTORS AS REQUIRED PER THE NEC.

9. THROUGH WALL PENETRATION SHALL INCLUDE A SUITABLE SLEEVE. SEAL BETWEEN WALL AND SLEEVE. SEAL INTERIOR OF SLEEVE AFTER INSTALLATION OF THE COAX CABLES.

10. RUN A #6 GROUND CONDUCTOR FROM THE GROUND BUS TO THE BUILDING GROUNDING ELECTRODE SYSTEM. CONNECTION TO A SUPPLEMENTAL GROUND IS NOT ACCEPTABLE.

11. LIGHTNING ARRESTORS SHALL BE POLYPHASER #TSX-DFF OR #TSX-NFF MOUNTED ON THE OUTSIDE OF THE PUMP STATION NEAREST TO THE COAX CABLE POINT OF ENTRY USING AN APPROVED MOUNTING BRACKET.

12. GROUND CONDUCTORS FROM THE LIGHTNING ARRESTOR TO THE GROUND BUS SHALL NOT EXCEED 36 INCHES.

13. LIGHTNING ARRESTORS TO BE MOUNTED ON OUTSIDE OF BUILDING.

14. LMR-240 CABLE SHALL NOT EXCEED 75 LINEAR FEET.

15. COAX CABLE CONNECTORS AT THE ROUTER / RADIO SHALL BE TNC MALE CONNECTORS.

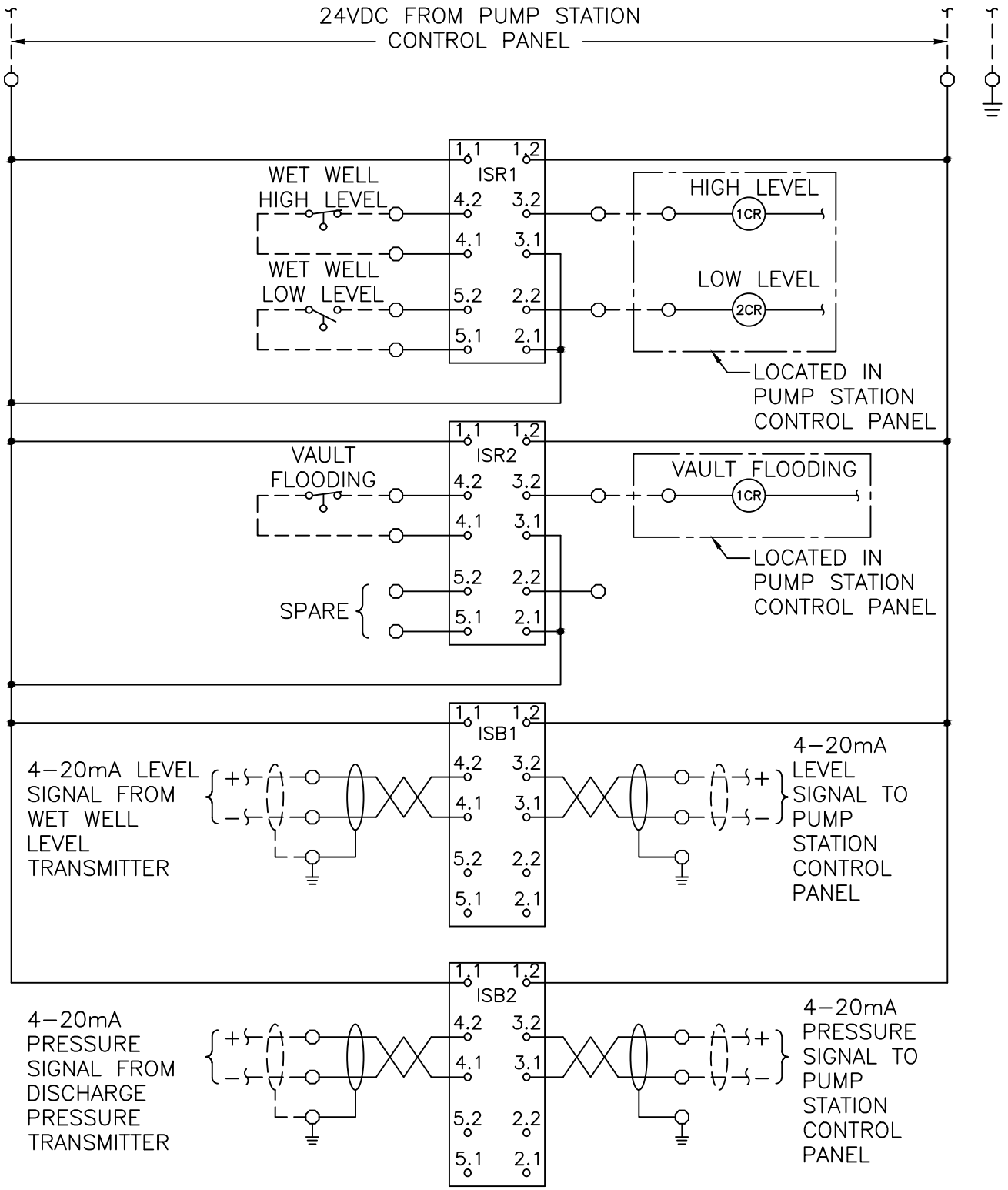

INTRINSIC SAFETY PANEL
WIRING DIAGRAM

HRSD	STANDARD DESIGN DETAIL	DRAWING NO. 702A
		SHEET 1 OF 2
	INTRINSIC SAFETY PANEL	DATE 12/2022

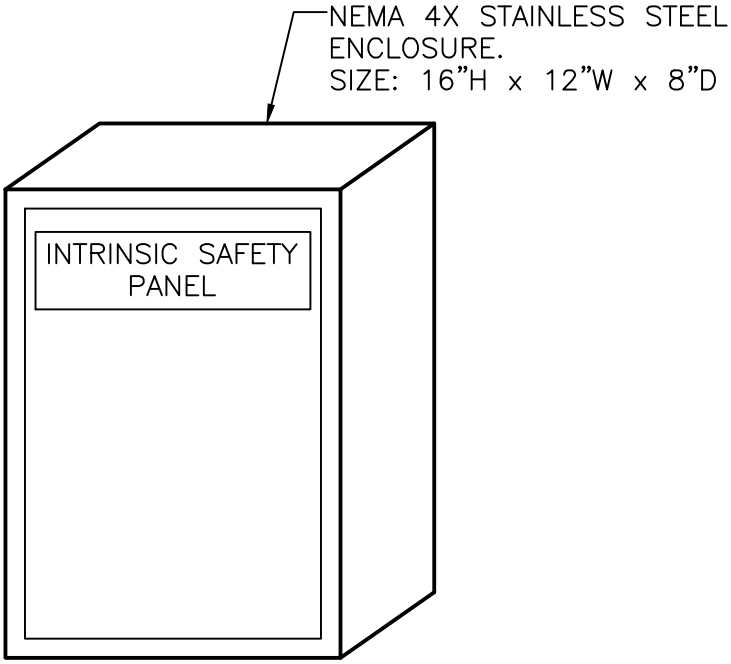

INTRINSIC SAFETY PANEL
PANEL LAYOUT

NOTES:

1. INTRINSIC SAFETY PANEL SHALL BE MOUNTED ON OUTSIDE OF BUILDING OR EQUIPMENT RACK.

2. CONDUITS FROM TRANSDUCER AND FLOAT SWITCH CABLES ENTERING INTRINSIC SAFETY PANEL REQUIRE NO SEAL OFF FITTINGS.

3. CONDUITS LEAVING INTRINSIC SAFETY PANEL GOING TO PUMP CONTROL PANEL SHALL HAVE SEAL OFF FITTINGS.

HRSD	STANDARD DESIGN DETAIL	DRAWING NO. 702B
		SHEET 2 OF 2
	INTRINSIC SAFETY PANEL	DATE 12/2022

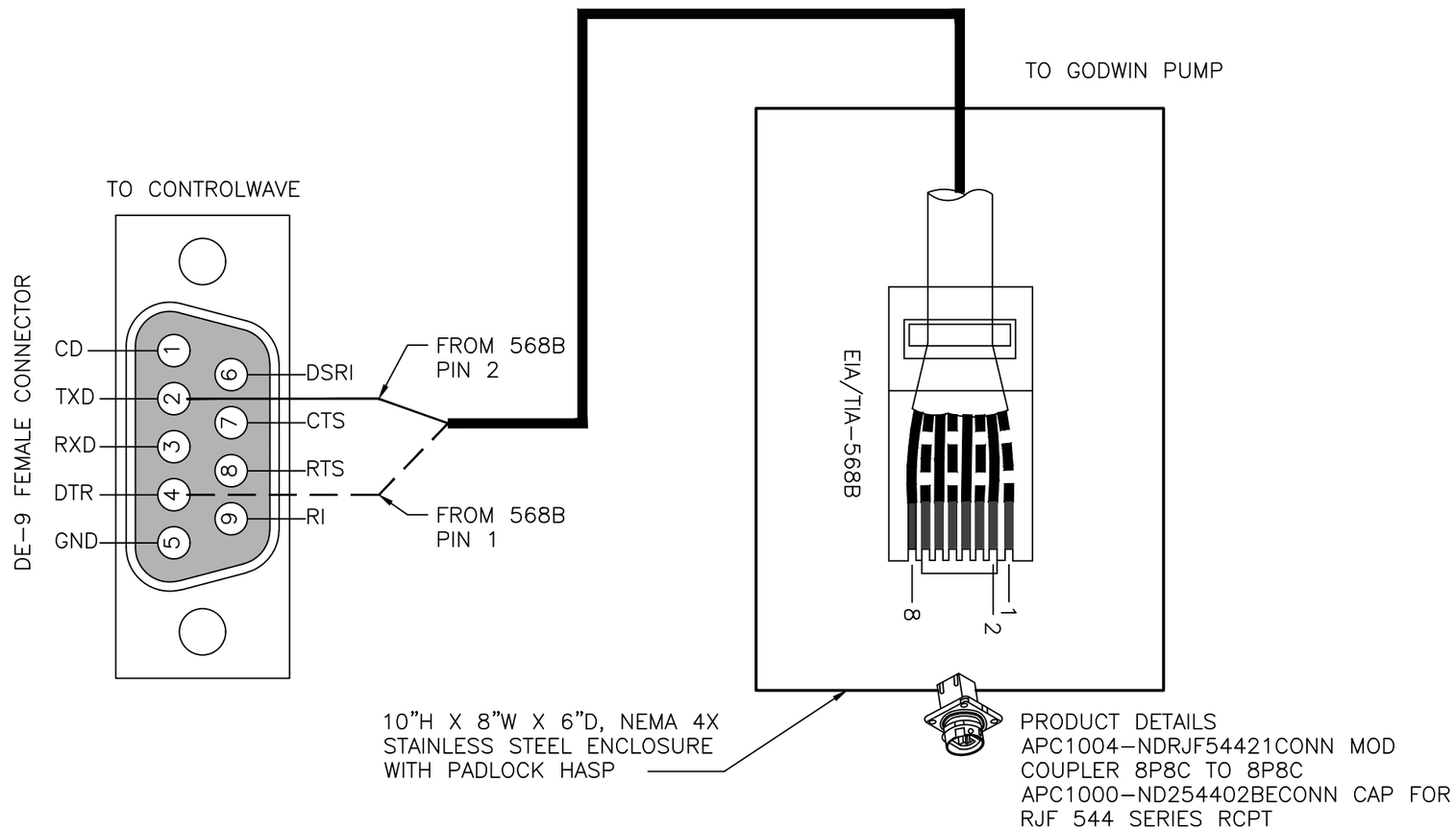

HRSD

STANDARD DESIGN DETAIL

TEMPORARY PUMP ENCLOSURE DETAIL

DRAWING NO. 703

SHEET 1 OF 1

DATE 12/2022

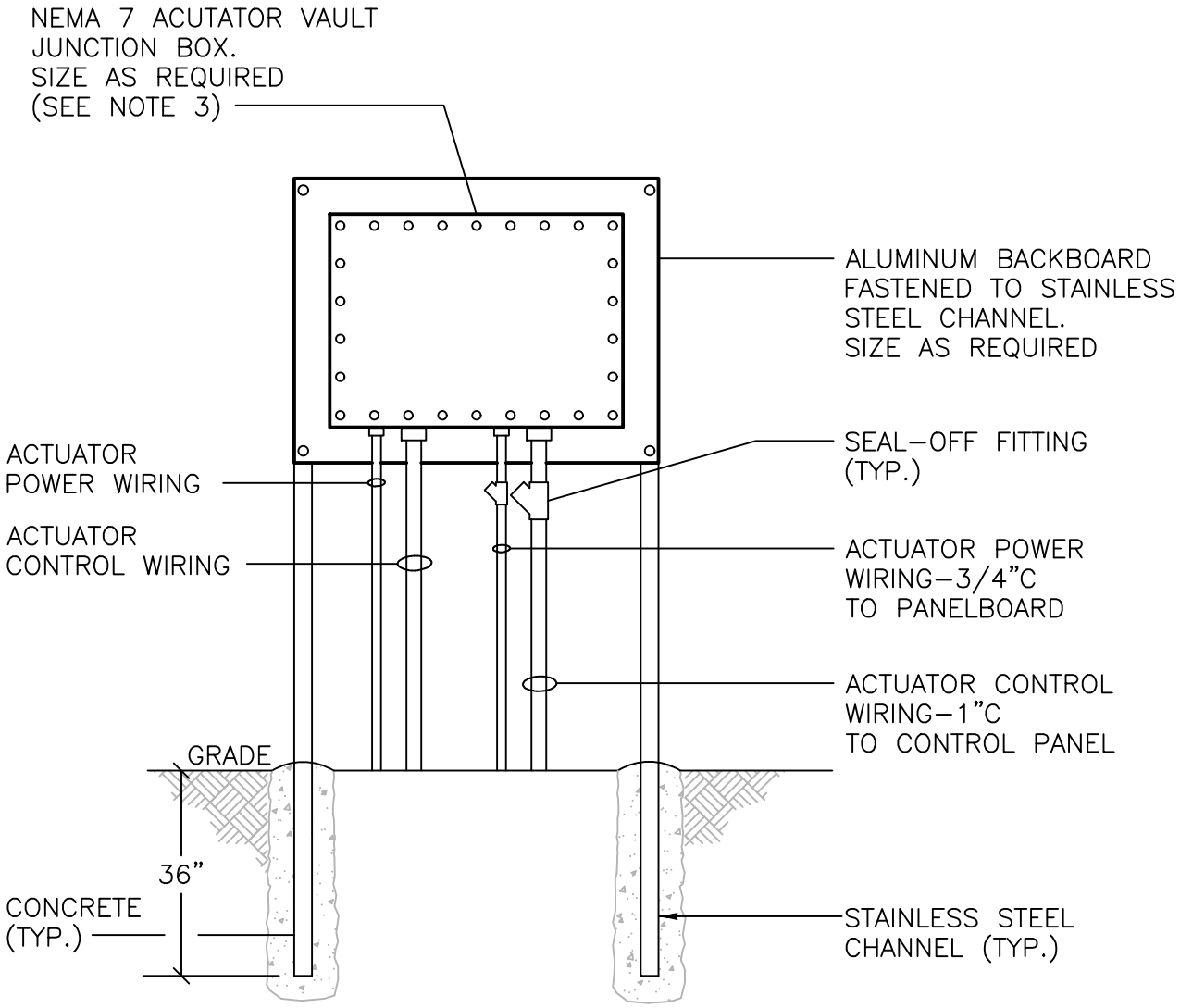

NOTES:

1. THE INSTRUMENT VAULT AND VALVE VAULT ARE CLASSIFIED AS A CLASS 1, DIVISION 2, GROUP D AREA IN ACCORDANCE WITH NFPA 820. THE INSTALLATION OF ALL ELECTRICAL EQUIPMENT AND CONDUIT SHALL BE PERFORMED IN ACCORDANCE WITH THIS CLASSIFICATION.

2. ALL CONDUIT PENETRATIONS THROUGH CONCRETE STRUCTURES SHALL BE INSTALLED THROUGH SLEEVED PENETRATIONS WITH MODULAR SEALS AND 316 STAINLESS STEEL HARDWARE.

3. PROVIDE A BARRIER BETWEEN POWER AND CONTROL WIRING.

NOT TO SCALE

HRSD	STANDARD DESIGN DETAIL	DRAWING NO. 704
		SHEET 1 OF 1
	ACTUATOR VAULT ELECTRICAL BACKBOARD DETAIL	DATE 12/2022

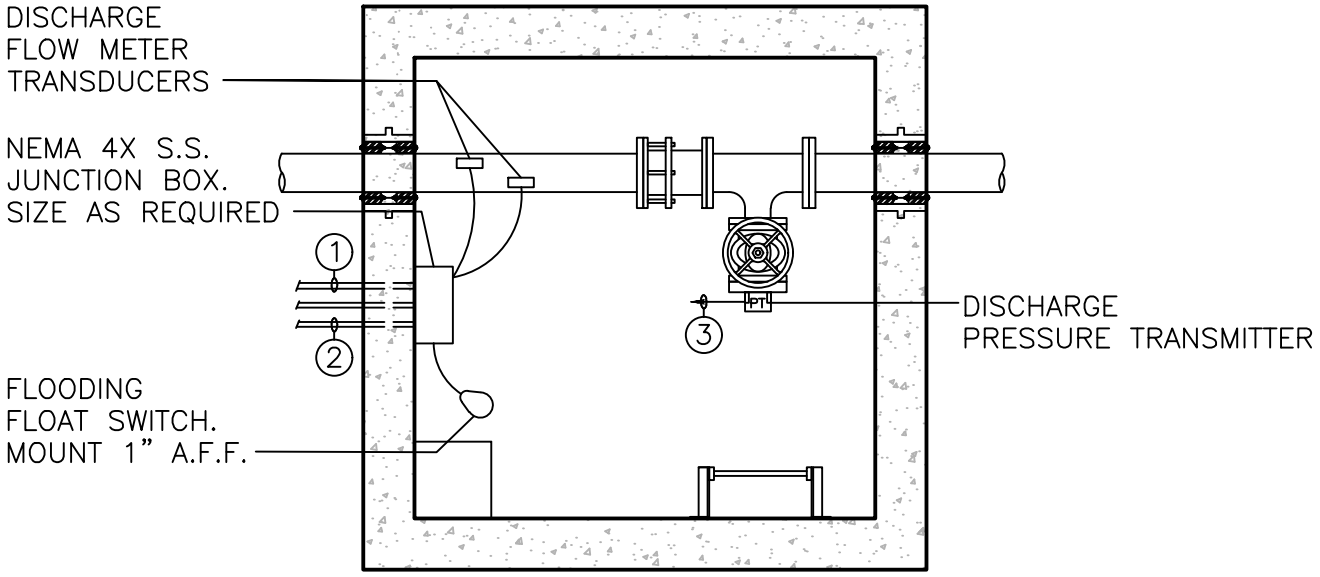

WIRING LEGEND:

1. DISCHARGE FLOW METER TRANSDUCER CABLES–1"C TO DISCHARGE FLOW METER TRANSMITTER

2. 2#14–3/4"C TO INTRINSIC SAFETY PANEL

3. 1 PR. #18 SHLD. TO INTRINSIC SAFETY PANEL. RUN IN 3/4"C TO JUNCTION BOX IN INSTRUMENT VAULT AND IN 3/4" TO INTRINSIC SAFETY PANEL

NOTES:

1. THE INSTRUMENT VAULT AND VALVE VAULT ARE CLASSIFIED AS A CLASS 1, DIVISION 2, GROUP D AREA IN ACCORDANCE WITH NFPA 820. THE INSTALLATION OF ALL ELECTRICAL EQUIPMENT AND CONDUIT SHALL BE PERFORMED IN ACCORDANCE WITH THIS CLASSIFICATION.

2. ALL CONDUIT PENETRATIONS THROUGH CONCRETE STRUCTURES SHALL BE INSTALLED THROUGH SLEEVED PENETRATIONS WITH MODULAR SEALS AND 316 STAINLESS STEEL HARDWARE.

3. PROVIDE A BARRIER BETWEEN POWER AND CONTROL WIRING.

NOT TO SCALE

HRSD	STANDARD DESIGN DETAIL	DRAWING NO. 705
		SHEET 1 OF 1
	INSTRUMENT VAULT ELECTRICAL PLAN	DATE 12/2022

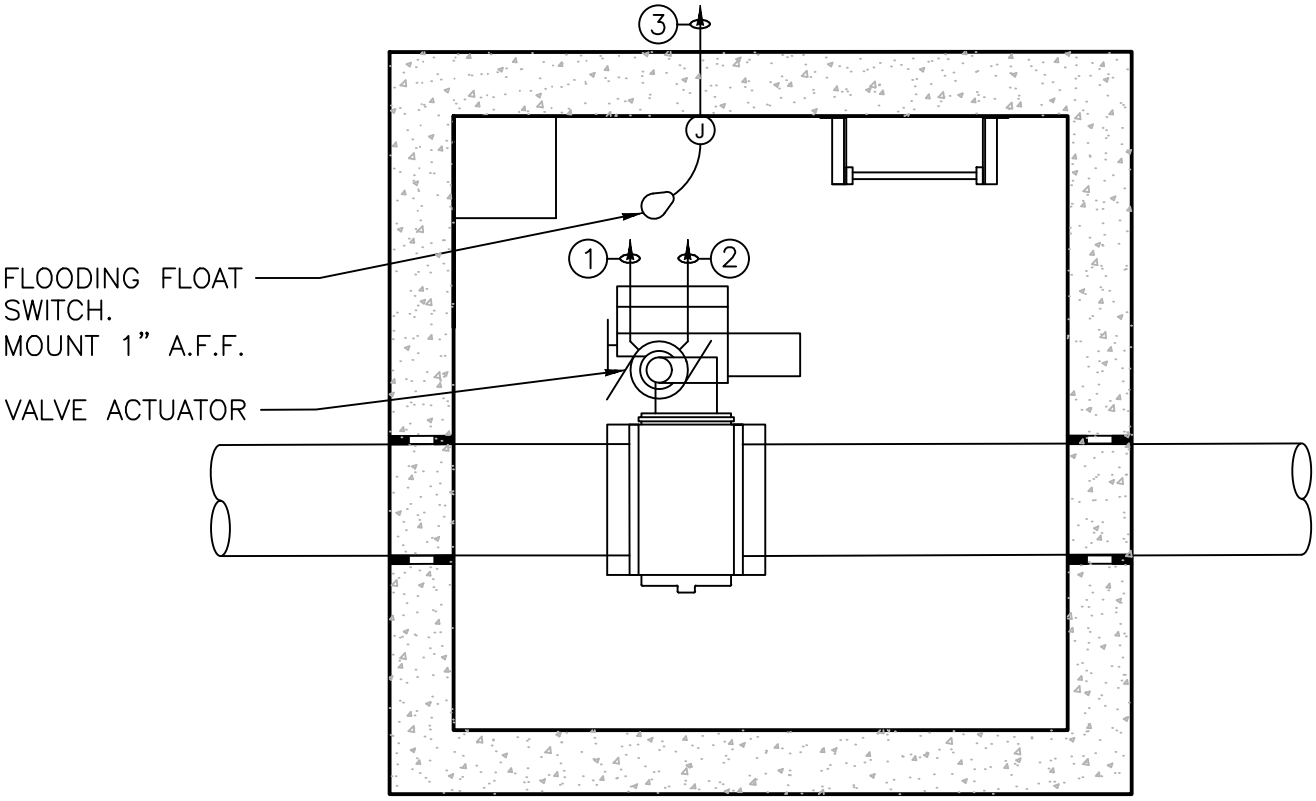

WIRING LEGEND:

1. ACTUATOR POWER WIRING–3/4"C TO ACTUATOR VAULT JUNCTION BOX

2. ACTUATOR CONTROL WIRING–1"C TO ACTUATOR VAULT JUNCTION BOX

3. 2#14–3/4"C TO INTRINSIC SAFETY PANEL

NOTES:

1. THE INSTRUMENT VAULT AND VALVE VAULT ARE CLASSIFIED AS A CLASS 1, DIVISION 2, GROUP D AREA IN ACCORDANCE WITH NFPA 820. THE INSTALLATION OF ALL ELECTRICAL EQUIPMENT AND CONDUIT SHALL BE PERFORMED IN ACCORDANCE WITH THIS CLASSIFICATION.

2. ALL CONDUIT PENETRATIONS THROUGH CONCRETE STRUCTURES SHALL BE INSTALLED THROUGH SLEEVED PENETRATIONS WITH MODULAR SEALS AND 316 STAINLESS STEEL HARDWARE.

3. PROVIDE A BARRIER BETWEEN POWER AND CONTROL WIRING.

NOT TO SCALE

HRSD	STANDARD DESIGN DETAIL	DRAWING NO. 706
		SHEET 1 OF 1
	ACTUATOR VAULT ELECTRICAL PLAN	DATE 12/2022

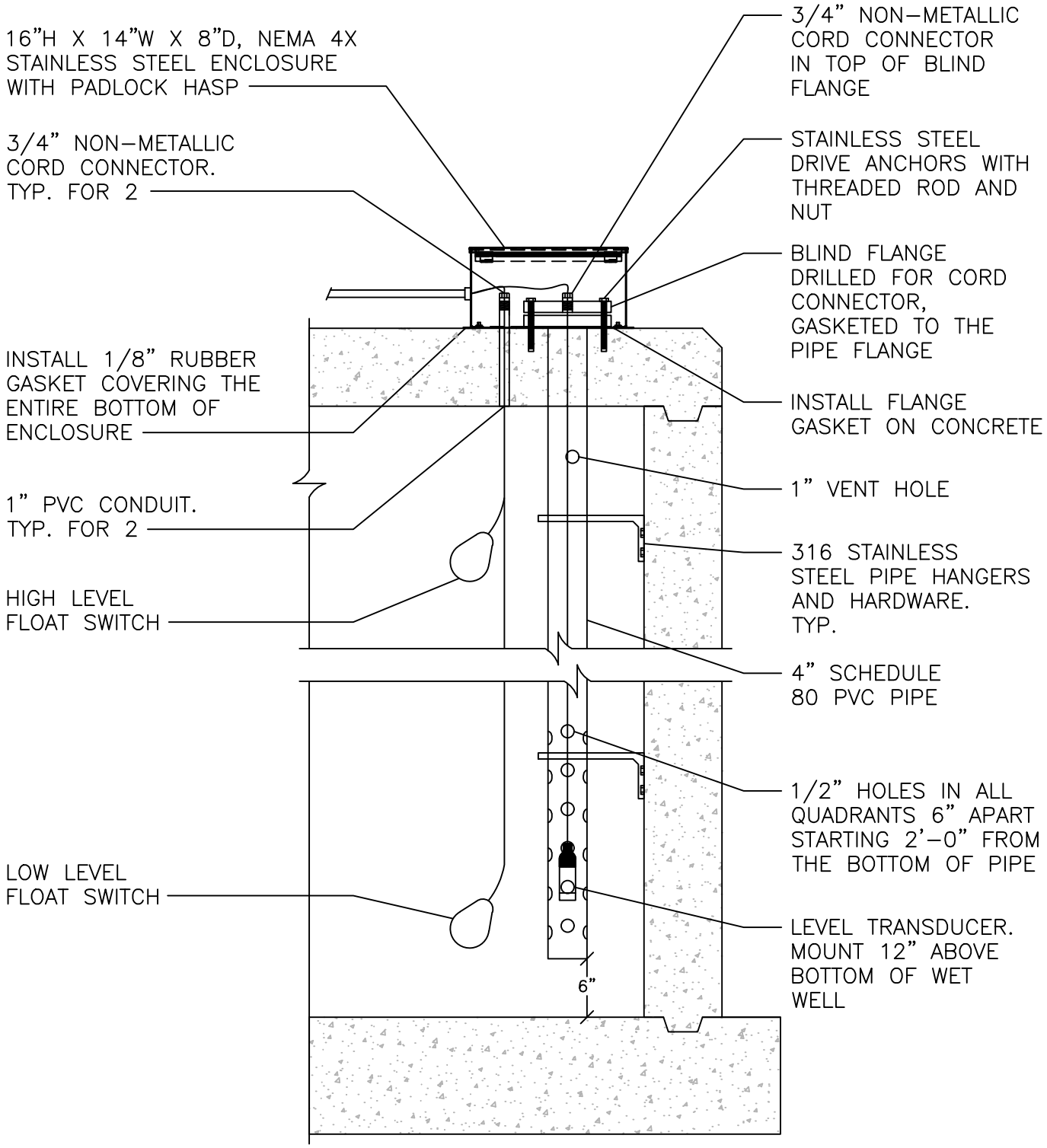

NOT TO SCALE

HRSD	STANDARD DESIGN DETAIL	DRAWING NO. 707A
		SHEET 1 OF 2
	WET WELL INSTRUMENTATION INSTALLATION DETAIL	DATE 12/2022

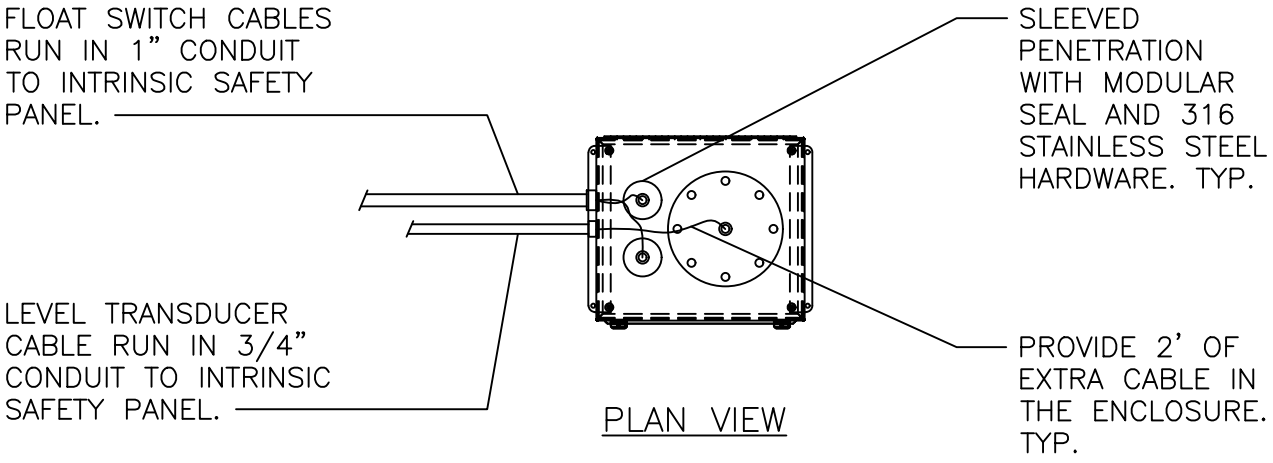

NOT TO SCALE

HRSD	STANDARD DESIGN DETAIL	DRAWING NO. 707B
	WET WELL INSTRUMENTATION INSTALLATION DETAIL	SHEET 2 OF 2
		DATE 12/2022

Section 37 - Suggested Division 1 Items

A. Introduction – HRSD has created the Master Technical Specifications in Section 40 under the Construction Specifications Institute (CSI), 2004 Master Format comprised of 16 Divisions, however the use of the newer 50 Divisions with approval of the HRSD Project Manager. HRSD provides specific input on a number of items that are normally located in Division 1 of the specifications. Among the Master Specifications sections included in this manual, some sections that comprise Division 1 are included and are to be used as a starting point for editing. Items covered in Division 1 should not be repeated in the other divisions of the technical specifications unless additional division or item specific requirements exist. Any Division 1 items must be coordinated with the General Conditions where appropriate. With few exceptions, the below list of Division 1 items should serve as a checklist and instruction sheet and is intended to provide HRSD requirements. It should not be considered as a complete list of items which may be required in Division 1 of the specifications.

B. The following table includes items that the FIRM should carefully review with the HRSD Project Manager and Contract Specialist in the preparation of Division 1 of the specifications. Typical sections where these items are commonly provided are indicated.

Potential Division 1 Items	Comments
Alterations to Existing Buildings (Section 01520)	If this work is to be extensive, a separate section listing specific constraints and sequence of construction may be required.
Maintenance of Operations - Construction Sequencing/MOPO (Section 01520)	HRSD requests the FIRM to provide sufficient details on required sequencing to ensure the continuous maintenance of plant, pump station and pipeline operations. This will ensure that all parties know of at least one way to construct the project and will have a better handle on proposed contract time. This also provides input to the question of multiple substantial completion items and dates.
Special Conditions - Progress Meetings (Section 01060)	Require monthly project meetings and special coordination meetings as required.
Summary of Work - Limits of Work Area (Section 01010)	Show limits on drawings. Include access routes and Contractor parking areas.
Miss Utility (Section 01040)	Require Contractor to contact Miss Utility before performing any excavation.

Potential Division 1 Items	Comments
Special Conditions - Notification of Property Owners (Section 01060)	Clarify with HRSD's Public Information Specialist whether the Contractor or the FIRM will be responsible for notifying all easement owners or adjacent property owners who will be affected by the project at least seven (7) calendar days in advance of work.
Number of Sets of Plans and Specifications to be Provided to Contractor (List in Supplementary Conditions)	Estimate a "reasonable" number or consider providing reproducibles if the Contractor desires format other than digital.
Submittals – Operation and Maintenance Manuals (Section 01340)	Contractor should provide a complete indexed Operation and Maintenance Manual. Correct all copies after startup to represent final record conditions. Provide final record version in PDF format per *HRSD Design and Construction Standards*.
Maintenance of Operations - Partial Use of Facilities (Section 01520)	If multiple startups are anticipated, provide specifics and address in liquidated damages and contract times sections of the specifications.
Summary of Work - Permits and Fees (Section 01010)	Highlight any permits requiring bonds or for which plan approval has been received. Identify what fees and who is responsible for. Include copies of VDOT, Railroad, Corps of Engineers or other permits which have been obtained for the project. Advise Contractor of existing HRSD permits and requirements. Contractor required to obtain storm water permit for construction activities. If fees cannot be reasonably determined prior to bid, consider direct reimbursement by change order.
Record Documents (Section 01323)	FIRM is responsible for final Record Drawings to HRSD. Require Contractor to keep records and submit to FIRM to assist in preparation of final Record Drawings. Require periodic review of Contractor markups by FIRM.
Safety and Security Requirements	Refer to Section 22 – "HRSD Safety Programs" in the standards manual.

Potential Division 1 Items	Comments
Schedules (Covered in General Conditions)	Require a scheduling method appropriate for the project. It is essential that the Contractor develop a well thought out schedule that is used to build the project rather than creating a schedule that is submitted only to meet specification requirement and not used to manage project work.
Submittals (Section 01340)	HRSD requires one complete set of all shop drawings when issued. The inspector shall also keep a complete set that will be turned over to HRSD upon completion of the project. If multiple HRSD sites are involved in the project, additional sets (paper or digital) of approved drawings may be required.
Substitutions (Covered in General Conditions)	Add special requirements for submissions on substitutions.
Special Conditions - Surveys and Layout (Section 01060)	FIRM to provide baseline and benchmarks. Contractor to provide detailed project layout based on baseline and benchmarks, Contractor to have any benchmarks or property markers damaged or destroyed during construction reset by a surveyor licensed in Virginia.
Special Conditions - Temporary Facilities (Section 01060)	HRSD will provide access points for power and water and provide reasonable quantities without charge at developed sites; Contractor to provide at undeveloped sites. Contractor to provide own temporary sanitary services at all sites. Contractor to provide own telephone service.
Testing Labs (Soils, Concrete, Asphalt Testing) (N/A)	FIRM shall competitively acquire services of an independent testing lab under Professional Services Agreement additional services and provide one copy of test reports to HRSD. Contractor may be required to provide concrete cylinder storage boxes or other support.
Traffic Control (Section 01060)	Refer to Permits.

Potential Division 1 Items	Comments
Special Conditions - Work Hours (Section 01060)	Highlight HRSD hours and holidays. Require Owner / FIRM approval for weekend work. Highlight any work hour restrictions. No tie-ins or work requiring Owner coordination on holidays or weekend without special approval.
Special Conditions - Wastewater Spills (Section 01060)	Refer to Section 21 – "Regulatory Reporting Requirements for Spills" in this standards manual. Contractor must notify FIRM and HRSD of any wastewater spill caused by his work. This is an HRSD permit issue.

End of Section

Section 38 - Front End Documents

A. Introduction – The Hampton Roads Sanitation District (HRSD) Commission has approved a set of front-end documents (advertisement through supplementary conditions) which must be used on HRSD construction projects. HRSD documents for use on Design-Bid-Build project deliveries and Design-Build project deliveries are based on the two versions of Engineering Joint Contract Documents Committee (EJCDC) standards. Verify with HRSD on which project delivery method is to be used along with the appropriate front-end documents. A complete set of the EJCDC documents for the traditional Design-Bid-Build project delivery is included at the end of this Section (please ask HRSD's Project Manager for the current version). The FIRM to coordinate with HRSD's Project Manager and Contract Specialist for Design-Build project delivery and/or Construction Manager project delivery for the appropriate front-end documents.

B. Responsibilities of the FIRM

1. Review the HRSD standard front-end documents.

2. Prepare a marked-up set of front-end documents providing required input including selecting options and filling in blanks. Provide information for the specification cover, table of contents (including all specification sections and complete list of drawings) and bid schedule (for anything other than single lump sum contracts) in Word. Forward to Project Manager for review then forward to HRSD's Contract Specialist for final typing.

3. Verify the project title, CIP Project Number (if applicable) and the date (month and year) on the drawings and technical specifications. The date (month and year) appears on the specification cover.

4. Prepare technical specifications and construction drawings that are coordinated with the front-end documents.

5. Provide plans and technical specifications to HRSD's Contract Specialist for incorporation with front end documents.

6. The Bid Form document is no longer a part of the front-end documents.

    a. Determine if lump sum or unit prices apply to this project. If unit prices apply, provide a bid summary sheet and verify unit of measurements match in the bid summary, Opinion of Probable Construction Cost, and Measurement and Payments technical specifications section.

    b. If Mobilization is to be included as a line item on the Bid Form, it shall be defined as not exceeding 6% of the total bid amount.

        i. Clearly define this item on the bid summary sheet and in the measurement and payment section of the technical specifications.

ii. Review mobilization bid item at all pre-bid meetings.
iii. Closely check each bid for conformance with this requirement.
iv. Review how the percentage of mobilization vs. demobilization should be applied on each project with HRSD's Project Manager.
v. Any variance from Mobilization as defined above shall be approved by HRSD's Project Manager. Do not cut and paste from past work!

C. Standard Front-End Documents are included at the end of this Section.

1. Project Specification Cover

2. Table of Contents

3. Advertisement for Bids

4. Instructions to Bidders

5. Questionnaire

6. Bid Bond

7. Agreement

8. Performance Bond

9. Payment Bond

10. Warranty Bond (where applicable)

11. Escrow Agreement (where applicable)

12. VCWRLF Requirements (where applicable)

13. WIFIA Requirements (where applicable)

14. Standard General Conditions of the Construction Contract

15. Supplementary Conditions

D. Specific Documents Requiring FIRM Input – The FIRM is responsible for preparing a specification cover sheet and table of contents, as well as the complete set of technical specifications and drawings. Specific input which must be provided to HRSD is listed below.

1. Advertisement for Bid – Fill in the following:

a. Project title

b. Project location

c. FIRM name and address

d. Bid time and date (work with HRSD's Project Manager to accomplish this based on Commission meeting schedule)

e. Provide a brief general project description.

f. Decide if pre-bid conference is required and establish the time, date, and location.

g. Work with HRSD's Project Manager if VCWRLF and/or WIFIA program requirements should be included.

h. FIRM shall make recommendation on the use of partnering on this project.

i. Work with HRSD's Project Manager to set the advertisement date. HRSD usually advertises on Monday using HRSD's Website, HRSD's Enterprise Resource Planning (ERP) system, and Virginia's eProcurement Marketplace (eVA) system.

2. Instructions to Bidders

a. Article -3 – Complete qualifications Bidder must possess to submit the bid. Coordinate with HRSD's Project Manager and Contract Specialist to establish these qualifications at the 90 percent design stage. Work with HRSD's Project Manager if VCWRLF and/or WIFIA program requirements should be included.

b. Article 4 – If pre-bid conference is to be held, provide input.

c. Paragraph 5.02.A.4 – Work with HRSD's Project Manager if Geotechnical Baseline Report/Geotechnical Data Reports are needed.

d. Paragraph 5.03 – Work with HRSD's Project Manager if Other Site-related Documents are needed

e. Paragraph 5.04.B – Work with HRSD's Project Manager if a site visit will be scheduled following the pre-bid conference.

f. Article 14 –Identify basis of bid (Lump Sum, Base Bid with Alternates or Unit Price and Allowance)

g. Article 23 – Work with HRSD's Project Manager to determine if state tax exemption will apply to this project.

h. Article 25– Work with HRSD's Project Manager to see if there are any contracts to be assigned for this project.

i. Article 26 – Leave in if Partnering is being considered.

j. Article 27 – Work with HRSD's Project Manager if VCWRLF and/or WIFIA program requirements should be included.

3. Questionnaire

   a. Number 16 and Number 17 – Work with HRSD's Project Manager if VCWRLF and/or WIFIA program requirements should be included.

4. Agreement

   a. Project Information – Provide project title.

   b. Article 1 – Update Project Description.

   c. Article 2 – Provide official name of FIRM (Engineer).

   d. Paragraph 3.02 – Determine the time (days or dates) for Substantial Completion and Final Completion.

   e. Paragraph 3.03 – Work with HRSD's Project Manager to see if there are any Milestones.

   f. Paragraph 3.04 – Provide the liquidated damages amount and bonus (if applicable) for Substantial Completion and Final Completion. The FIRM must prepare a memorandum stating how the amounts were calculated and submit to HRSD's Contract Specialist prior to advertisement for construction bids as identified in Section 14 – "Coordination of Preconstruction Phase Issues" of these Standards.

   g. Article 4 – HRSD's Contract Specialist will complete this section when drafting the Agreement for the successful Bidder.

   h. Paragraphs 5.03.B and C. - HRSD's Contract Specialist with update.

   i. Paragraph 7.01.A.7 – List number of Drawings and Project title.

   j. Paragraph 7.01.A.11– List other exhibits to this Agreement, if needed

5. Supplementary Conditions

   a. Paragraph 5.03 – Provide the required information on reports of explorations and test of subsurface conditions.

b. Paragraph 5.06 – Determine if asbestos, PCBs, petroleum, hazardous waste, or radioactive materials have been identified at the site.

c. Paragraph 6.03.H – Provide names and addresses for additional insureds on insurance policies.

d. Paragraph 6.04.A Have HRSD's Project Manager and Contract Specialist review with Director and Insurance Consultant if project will be over $10 million. Provide dollar value if HRSD supplies equipment/material if cost is over $100,000.

e. Paragraph 7.07 – Select the appropriate option.

f. Paragraph 7.10 – Determine if the state tax exemption is applicable to this project and include or delete as appropriate.

g. Paragraph 7.13 – Determine if applicable and provide additional information.

h. Paragraph 8.02 – Determine if other work will be performed at the site by others.

i. Paragraph 10.03 – Review and modify duties between RPR and Contract Administrator.

End of Section

PROJECT MANUAL
for the Construction of
[PROJECT NAME]
CIP No. [Number]
[OPTIONAL] VCWRLF No. [Number]
City of [City], Virginia
[Date]

VOLUME 1 OF [#]

HRSD

[Engineer's Name]
[Address]
[Address]

HAMPTON ROADS SANITATION DISTRICT
[PROJECT NAME]

PROJECT MANUAL

TABLE OF CONTENTS

VOLUME 1 OF 2

BIDDING REQUIREMENTS

- ADVERTISEMENT FOR BIDS
- INSTRUCTIONS TO BIDDERS
- QUESTIONNAIRE
- BID BOND

CONTRACT FORMS

- AGREEMENT
- PERFORMANCE BOND
- PAYMENT BOND
- [IF APPLICABLE] WARRANTY BOND
- [IF APPLICABLE-ONLY FOR FM AND PS PROJECTS] ESCROW AGREEMENT
- [IF APPLICABLE-CS WILL ADD DOCUMENTS] VIRGINIA CLEAN WATER REVOLVING LOAN FUND REQUIREMENTS
- [IF APPLICABLE-CS WILL ADD DOCUMENTS] WATER INFRASTRUCTURE FINANCE AND INNOVATION ACT REQUIREMENTS

CONDITIONS OF THE CONTRACT

- STANDARD GENERAL CONDITIONS OF THE CONSTRUCTION CONTRACT
- SUPPLEMENTARY CONDITIONS

TECHNICAL SPECIFICATIONS

VOLUME 2 OF 2

DRAWINGS

BIDDING REQUIREMENTS

ADVERTISEMENT FOR BIDS

Solicitation No. [#]

PROJECT: [PROJECT NAME]

LOCATION: [City or County of Project], Virginia

ENGINEER: [Name]
[Address]

The Hampton Roads Sanitation District (HRSD) will receive electronic Bids for the above referenced project online through HRSD's Online Oracle ERP system (https://www.hrsd.com) by [date] no later than 2:00 p.m. local time. Failure to submit a Bid through HRSD's Online Oracle ERP system prior to the due date and time will be cause for rejection by HRSD. Interested firms can attend the virtual bid opening at the following link Bid Opening [add link to Bid Opening] or calling [number] and using Conference ID [number].

Procedures for submitting a Bid, claiming an error, withdrawing of Bids and other pertinent information are contained in the Instructions to Bidders. HRSD reserves the right to reject any or all Bids, waive any informalities, or negotiate with the low bidder as described in the Instructions to Bidders.

Bid Documents may be viewed by logging into HRSD's Online Oracle ERP system. All Bidders must be registered in advance of submitting a Bid. Technical questions should be submitted through HRSD's Online Oracle ERP system as an online discussion. Questions related to submitting a Bid or using the online system should be directed to the ERP HelpDesk at erphelp@hrsd.com or 757-460-7318 or [CS Name] at [name]@hrsd.com.

Contractor registration in accordance with Title 2.2, Chapter 43 and Title 54.1, Chapter 11, Code of Virginia is required.

The Project or Work consists of [General Project Description].

[OPTIONAL] A pre-bid conference will be held at [Location] on [date] at [#]:00 a/p.m. local time. Attending the conference [shall/shall not] be mandatory for those submitting a Bid. **[OPTIONAL]** A site visit will be held immediately following the pre-bid conference.

[or]

[OPTIONAL] A virtual pre-bid conference will be held on [date] at [#]:00 a/p.m. local time at the following link Pre-bid Conference [add link to Pre-Bid Conference] or calling [number] and using Conference ID [number]. Attending the conference [shall/shall not] be mandatory for those submitting a Bid.

A Bid Bond in the amount of 5 percent of the Bid shall be submitted electronically with each Bid.

[OPTIONAL - VCWRLF] This project is being funded in part under the Virginia Clean Water Revolving Loan Fund (VCWRLF). Bidders shall comply with the President's Executive Order No. 11246 (Prohibiting discrimination in employment regarding race, color, creed, sex or national origin), No. 12138 and No. 11625 (Regarding MBE/WBE utilization). Bidders shall also comply with the Civil Rights Act of 1964. Bidders must certify that they do not and will not maintain or provide for their employees any facilities

that are segregated on basis of race, color, creed or national origin.

[OPTIONAL - WIFIA] This project is being funded in part under the Water Infrastructure Finance and Innovation Act (WIFIA). Bidders shall comply with the President's Executive Order No. 12549, United States Code Title 31, Section 1352, and with the following federal non-discrimination requirements: Civil Rights Act of 1967, Rehabilitation Act of 1973, The Age Discrimination Act of 1975, Federal Water Pollution Control Act Amendments of 1972, Title 40, Part 7 of the Code of Federal Regulations, and President's Executive Order No. 11246.

INSTRUCTIONS TO BIDDERS FOR CONSTRUCTION CONTRACT

TABLE OF CONTENTS

Page

Article 1— General Information 1

Article 2— Bidding Documents 2

Article 3— Qualifications of Bidders 2

Article 4— Pre-Bid Conference 3

Article 5— Site and Other Areas; Existing Site Conditions; Examination of Site; Owner's Safety Program; Other Work at the Site 3

Article 6— Bidder's Representations and Certifications 6

Article 7— Interpretations and Addenda 7

Article 8— Bid Security 8

Article 9— Contract Times 8

Article 10— Liquidated Damages 8

Article 11— Substitute and "Or Equal" Items 8

Article 12— Subcontractors, Suppliers, and Others 9

Article 13— Preparation of Bid 9

Article 14— Basis of Bid 10

Article 15— Submittal of Bid 11

Article 16— Modification and Withdrawal of Bid 11

Article 17— Opening of Bids 12

Article 18— Bids to Remain Subject to Acceptance 12

Article 19— Evaluation of Bids 12

Article 20— Negotiation with the Lowest Responsible Bidder 13

Article 21— Bonds and Insurance 13

Article 22— Award of Contract and Signing of Agreement 13

Article 23— [OPTIONAL] Taxes 13

Article 24— Retainage 13

Article 25— [OPTIONAL] Contracts to be Assigned 13

Article 26— [OPTIONAL] Partnering 14

Article 27— [OPTIONAL] Project Funding 14

Article 28— Attachment(s) 17

This document is a MODIFIED version of EJCDC® C-200, Instructions to Bidders for Construction Contract. Copyright© 2018 National Society of Professional Engineers, American Council of Engineering Companies, and American Society of Civil Engineers. All rights reserved.

ARTICLE 1—GENERAL INFORMATION

1.01 *Definitions*

A. Terms used in these Instructions to Bidders have the meanings indicated in the General Conditions and Supplementary Conditions. Additional terms used in these Instructions to Bidders have the meanings indicated below:

1. *Bidder*—The corporation, partnership, limited liability company, or combination thereof, acting directly or through an authorized representative, formally submitting a Bid directly to Owner, as distinct from a sub-bidder, who submits a Bid to a Bidder.

2. *Bidding Documents*—The Advertisement for Bids, Instructions to Bidders, and the proposed Contract Documents (including all Addenda issued prior to the receipt of Bids).

3. *Issuing Office*—The office from which the Bidding Documents are to be issued.

4. *Sub*-bidder—An entity to whom the Bidder intends to subcontract any part of the Work.

5. *Successful Bidder*—The lowest, responsible, and responsive Bidder to whom Owner (on the basis of the Engineers and Owner's evaluation as hereinafter provided) makes an award.

B. In addition to terms specifically defined, terms with initial capital letters in the Instructions to Bidders include references to identified articles and paragraphs, and the titles of other documents and forms.

1.02 *Bidder Registration*

A. All Bidders must register on Hampton Roads Sanitation District's (HRSD) Online Oracle Enterprise Resource Planning (ERP) system prior to submitting a Bid. The following information shall be required:

1. Company (Supplier) Name.

2. Taxpayer Identification Number.

3. Primary Contact.

4. Mailing Address, E-Mail Address, and Telephone Number.

5. National Institute of Governmental Purchasing (NIGP) Commodity Codes; go to https://www.hrsd.com/engineering-task-submittals to obtain the Engineering's Design and Construction NIGP Commodity Codes used for Solicitations.

6. Copy of most recent W-9 Form.

7. Other information as required.

1.03 *Additional Information*

A. Except as amended by the Contract Documents, the procurement activities for HRSD are governed by the HRSD Procurement Policy as adopted by the HRSD Commission (Commission), the HRSD Enabling Act, the Virginia Public Procurement Act (VPPA), and other state and federal statutes and regulations as appropriate. A copy of HRSD's Procurement Policy is available online at HRSD's website and is hereby made a part of this RFP; go to https://www.hrsd.com/procurement-manuals-guidelines and select the Procurement Policy (pdf) link.

This document is a MODIFIED version of EJCDC® C-200, Instructions to Bidders for Construction Contract. Copyright© 2018 National Society of Professional Engineers, American Council of Engineering Companies, and American Society of Civil Engineers. All rights reserved.

ARTICLE 2—BIDDING DOCUMENTS

2.01 Bidder shall obtain a complete set of Bidding Documents by logging into HRSD's Online Oracle ERP system. See the Agreement for a list of the Contract Documents. It is the Bidder's responsibility to determine that it is using a complete set of documents in the preparation of a Bid. Bidder assumes sole responsibility for errors or misinterpretations resulting from the use of incomplete documents, by Bidder itself or by its prospective Subcontractors and Suppliers. Neither Owner nor Engineer assumes any responsibility for errors or misinterpretations resulting from the use of incomplete sets of Bidding Documents.

2.02 Bidding Documents are made available for the sole purpose of obtaining Bids for completion of the Project and permission to download or distribution of the Bidding Documents does not confer a license or grant permission or authorization for any other use. Authorization to download documents, or other distribution, includes the right for registered users to print documents solely for their use, and the use of their prospective Subcontractors and Suppliers.

ARTICLE 3—QUALIFICATIONS OF BIDDERS

3.01 To demonstrate Bidder's qualifications to perform the Project or Work, after submitting its Bid and within 48 hours, the apparent low Bidder and other Bidders as requested by the Owner or the Engineer shall submit the following information:

A. Completed copy of attached Questionnaire; [**ONLY IF PROJECT FUNDING**: including the Bidder Compliance Statement/Certification Regarding Equal Employment Opportunity.] Qualifications required from the Bidder shall be based on prior experience of the corporation, partnership, limited liability company, or combination thereof, as identified in the Bid response as described in Paragraph 3.01.B. Prior experience from a Sub-bidder shall not be accepted as experience for the Bidder.

B. The Bidder shall document specific experience in the construction of [Update with Qualifications]. Give project titles, Owner's and Engineer's names, addresses, and telephone numbers, and project values. Attach additional pages to the Questionnaire as necessary to provide this information.

C. **[ONLY IF PROJECT FUNDING]** Bidders need to verify and confirm that they are utilizing the latest Davis Bacon Wage rates prior to submitting its Bid.

D. **[ONLY IF PROJECT FUNDING]** Documentation on Minority and Women's Business Enterprises (MBE/WBE) solicitation efforts.

E. **[ONLY IF VCWRLF]** For the Virginia Clean Water Revolving Loan Fund (VCWRLF) Program Requirements, a signed copy of the American Iron and Steel (AIS) Certification Statement (Attachment #6).

F. **[ONLY IF WIFIA]** Water Infrastructure Finance and Innovation Act (WIFIA) Program Requirements, a completed and signed copy of the Certification Regarding Lobbying (Appendix A), Disclosure of Lobbying Activities (Appendix B), and American Iron and Steel (AIS) Certification Statement (Appendix D).

G. Additional information may be requested after the Questionnaires are received if, in the opinion of the Owner or the Engineer, the information submitted is insufficient to complete the evaluation of the Bidder.

3.02 Bidder shall meet the on-site work force requirements as defined in the Supplementary Conditions Paragraph 7.07.

This document is a MODIFIED version of EJCDC® C-200, Instructions to Bidders for Construction Contract. Copyright© 2018 National Society of Professional Engineers, American Council of Engineering Companies, and American Society of Civil Engineers. All rights reserved.

3.03 A Bidder's failure to submit required qualification information within the times indicated may disqualify Bidder from receiving an award of the Contract.

3.04 No requirement in this Article 3 to submit information will prejudice the right of Owner to seek additional pertinent information regarding Bidder's qualifications.

ARTICLE 4—PRE-BID CONFERENCE

4.01 If a pre-bid conference is to be held, the date, time, and location will be stated in the Advertisement for Bids. The pre-bid conference is [mandatory/non-mandatory] and Bidders are [required/encouraged] to attend and participate. Representatives of Owner and Engineer will be present to discuss the Project.

4.02 Information presented at the pre-bid conference does not alter the Contract Documents. Owner will issue Addenda to make any changes to the Contract Documents that result from discussions at the pre-bid conference. Information presented, and statements made at the pre-bid conference will not be binding or legally effective unless incorporated in an Addendum.

ARTICLE 5—SITE AND OTHER AREAS; EXISTING SITE CONDITIONS; EXAMINATION OF SITE; OWNER'S SAFETY PROGRAM; OTHER WORK AT THE SITE

5.01 *Site and Other Areas*

A. The Site is identified in the Bidding Documents. By definition, the Site includes rights-of-way, easements, and other lands furnished by Owner for the use of the Contractor. Any additional lands required for temporary construction facilities, construction equipment, or storage of materials and equipment, and any access needed for such additional lands, are to be obtained and paid for by Contractor.

5.02 *Existing Site Conditions*

A. *Subsurface and Physical Conditions; Hazardous Environmental Conditions*

1. The Supplementary Conditions identify the following regarding existing conditions at or adjacent to the Site:

a. Those reports known to Owner of explorations and tests of subsurface conditions at or adjacent to the Site that contain Technical Data.

b. Those drawings known to Owner of existing physical conditions at or adjacent to the Site, including those drawings depicting existing surface or subsurface structures at or adjacent to the Site (except Underground Facilities), that contain Technical Data.

c. Reports and drawings known to Owner relating to Hazardous Environmental Conditions that have been identified at or adjacent to the Site.

d. Technical Data contained in such reports and drawings.

2. Owner will make copies of reports and drawings referenced above available to any Bidder on request. These reports and drawings are not part of the Contract Documents, but the Technical Data contained therein upon whose accuracy Bidder is entitled to rely, as provided in the General Conditions, has been identified and established in the Supplementary Conditions. Bidder is responsible for any interpretation or conclusion Bidder draws from any Technical Data or any other data, interpretations, opinions, or information contained in such reports or shown or indicated in such drawings.

3. If the Supplementary Conditions do not identify Technical Data, the default definition of

This document is a MODIFIED version of EJCDC® C-200, Instructions to Bidders for Construction Contract. Copyright© 2018 National Society of Professional Engineers, American Council of Engineering Companies, and American Society of Civil Engineers. All rights reserved.

Technical Data set forth in Article 1 of the General Conditions will apply.

4. **[OPTIONAL]** *Geotechnical Baseline Report/Geotechnical Data Report:* The Bidding Documents contain a Geotechnical Baseline Report (GBR) and Geotechnical Data Report (GDR).

   a. As set forth in the Supplementary Conditions, the GBR describes certain select subsurface conditions that are anticipated to be encountered by Contractor during construction in specified locations ("Baseline Conditions"). The GBR is a Contract Document.

   b. The Baseline Conditions in the GBR are intended to reduce uncertainty and the degree of contingency in submitted Bids. However, Bidders cannot rely solely on the Baseline Conditions. Bids should be based on a comprehensive approach that includes an independent review and analysis of the GBR, all other Contract Documents, Technical Data, other available information, and observable surface conditions. Not all potential subsurface conditions are baselined.

   c. Nothing in the GBR is intended to relieve Bidders of the responsibility to make their own determinations regarding construction costs, bidding strategies, and Bid prices, nor of the responsibility to select and be responsible for the means, methods, techniques, sequences, and procedures of construction, and for safety precautions and programs incident thereto.

   d. As set forth in the Supplementary Conditions, the GDR is a Contract Document containing data prepared by or for the Owner in support of the GBR.

B. *Underground Facilities:* Information and data shown or indicated in the Bidding Documents with respect to existing Underground Facilities at or contiguous to the Site are set forth in the Contract Documents and are based upon information and data furnished to Owner and Engineer by owners of such Underground Facilities, including Owner, or other.

C. *Adequacy of Data:* Provisions concerning responsibilities for the adequacy of data furnished to prospective Bidders with respect to subsurface conditions, other physical conditions, and Underground Facilities and possible changes in the Bidding Documents due to differing or unanticipated subsurface or physical conditions appear in Paragraphs 5.03, 5.04, and 5.05 of the General Conditions. Provisions concerning responsibilities for the adequacy of data furnished to prospective Bidders with respect to Hazardous Environmental Conditions at the Site, if any, and possible changes in the Contract Documents due to any Hazardous Environmental Conditions uncovered or revealed at the Site which was not shown or indicated in the Drawings or Specifications or identified in the Contract Documents to be within the scope of the Work, appear in Paragraph 5.06 of the General Conditions.

5.03 **[OPTIONAL]** *Other Site-related Documents*

A. In addition to the documents regarding existing Site conditions referred to in Paragraph 5.02.A, the following other documents relating to conditions at or adjacent to the Site are known to Owner and made available to Bidders for reference:

   1. [List of other Site-related documents].

   Owner will make copies of these other Site-related documents available to any Bidder on request.

B. Owner has not verified the contents of these other Site-related documents, and Bidder may not rely on the accuracy of any data or information in such documents. Bidder is responsible

This document is a MODIFIED version of EJCDC® C-200, Instructions to Bidders for Construction Contract. Copyright© 2018 National Society of Professional Engineers, American Council of Engineering Companies, and American Society of Civil Engineers. All rights reserved.

for any interpretation or conclusion Bidder draws from the other Site-related documents.

C. The other Site-related documents are not part of the Contract Documents.

D. Bidders are encouraged to review the other Site-related documents, but Bidders will not be held accountable for any data or information in such documents. The requirement to review and take responsibility for documentary Site information is limited to information in (1) the Contract Documents and (2) the Technical Data.

E. No other Site-related documents are available.

5.04 *Site Visit and Testing by Bidders*

A. Bidder shall conduct the required Site visit during normal working hours and conduct a thorough visual examination of the Site and adjacent sites. During the visit the Bidder must not disturb any ongoing operations at the Site.

B. Site visit of the Project will be held immediately following the pre-bid conference; the date time, and location will be stated in the Advertisement for Bids [OR] Site visit(s) of the Project will be on DATE at TIME a.m./p.m. and TIME a.m./p.m. local time. Please refer to paragraph "Pre-Bid & Pre-Proposal Conference, Site Visits, and other related meetings" in Attachment 1 – HRSD Special COVID-19 Notice: Site Visits, Current and Future Contract Awards (Updated Month Year), provided in Article [#]. Site visits will be limited to [#]-hour duration from the scheduled start time. There will be no other site visits. **[OR]** There will be no site visit for this Procurement.

C. Bidder is not required to conduct any subsurface testing, or exhaustive investigations of Site conditions.

D. On request, and to the extent Owner has control over the Site, and schedule permitting, the Owner will provide Bidder general access to the Site to conduct such additional examinations, investigations, explorations, tests, and studies as Bidder deems necessary for preparing and submitting a successful Bid. Owner will not have any obligation to grant such access if doing so is not practical because of existing operations, security or safety concerns, or restraints on Owner's authority regarding the Site.

E. Bidder shall comply with all applicable Laws and Regulations regarding excavation and location of utilities, obtain all permits, and comply with all terms and conditions established by Owner or by property owners or other entities controlling the Site with respect to schedule, access, existing operations, security, liability insurance, and applicable safety programs.

F. Bidder shall restore the property to the equivalent of its original condition upon completion of such explorations, investigations, tests, and studies which shall include but is not limited to filling of all holes and clean-up of Site. Bidder shall indemnify, defend, and hold Owner harmless from and against all claims, costs, losses, damages, and expenses, including reasonable attorney fees, arising from Bidder's, its agent's, employee's, designee's, representative's or contractor's activities upon the Site.

5.05 *Owner's Safety Program*

A. Site visits and work at the Site and HRSD property will be governed by an Owner safety program. Requirements of HRSD's safety program are defined in the General Conditions, Supplementary Conditions, and Technical Specification section on Special Conditions.

5.06 *Other Work at the Site*

This document is a MODIFIED version of EJCDC® C-200, Instructions to Bidders for Construction Contract. Copyright© 2018 National Society of Professional Engineers, American Council of Engineering Companies, and American Society of Civil Engineers. All rights reserved.

A. Reference is made to Article 8 of the Supplementary Conditions for the identification of the general nature of other work of which Owner is aware, if any, that is to be performed at the Site by Owner or others (such as utilities and other prime contractors) and relates to the Work contemplated by these Bidding Documents. If Owner is party to a written contract for such other work, then on request, Owner will provide to each Bidder access to examine such contracts (other than portions thereof related to price and other confidential matters), if any.

5.07 *Additional Information*

A. Provisions concerning possible changes in the Contract Documents due to differing or unforeseen conditions appear in Paragraph 5.04 of the General Conditions.

B. HRSD Design and Construction Standards are available for review at https://www.hrsd.com/standards. Any variances of these standards not specifically shown in the Contract Documents must be approved by HRSD prior to the submittal of the Bid.

ARTICLE 6—BIDDER'S REPRESENTATIONS AND CERTIFICATIONS

6.01 *Representations:* It is the responsibility of each Bidder before submitting a Bid to:

A. examine and carefully study the Bidding Documents, and any data and reference items identified in the Bidding Documents;

B. visit the Site, conduct a thorough, alert visual examination of the Site and adjacent areas, and become familiar with and satisfy itself as to the general, local, and Site conditions that may affect cost, progress, and performance of the Work;

C. become familiar with and satisfy itself as to all Laws and Regulations that may affect cost, progress, and performance of the Work;

D. carefully study all: (1) reports of explorations and tests of subsurface conditions at or adjacent to the Site and all drawings of physical conditions relating to existing surface or subsurface structures at the Site that have been identified in the Supplementary Conditions, especially with respect to the Technical Data in such reports and drawings, and (2) reports and drawings relating to Hazardous Environmental Conditions, if any, at or adjacent to the Site that have been identified in the Supplementary Conditions, especially with respect to Technical Data in such reports and drawings;

E. consider the information known to Bidder itself; information commonly known to the contractors doing business in the locality of the Site; information and observations obtained from visits to the Site; the Bidding Documents; and the Site-related reports and drawings identified in the Bidding Documents, with respect to the effect of such information, observations, and documents on (1) the cost, progress, and performance of the Work; (2) the means, methods, techniques, sequences, and procedures of construction to be employed by Bidder; and (3) Bidder's safety precautions and programs;

F. agree, based on the information and observations referred to in the preceding paragraph, that at the time of submitting its Bid no further examinations, investigations, explorations, tests, studies, or data are necessary for the determination of its Bid for performance of the Work at the price bid and within the times required, and in accordance with the other terms and conditions of the Bidding Documents;

G. become aware of the general nature of the work to be performed by Owner and others at the Site that relates to the Work as indicated in the Bidding Documents;

H. promptly submit an online discussion through HRSD's Online Oracle ERP system as a written

This document is a MODIFIED version of EJCDC® C-200, Instructions to Bidders for Construction Contract. Copyright© 2018 National Society of Professional Engineers, American Council of Engineering Companies, and American Society of Civil Engineers. All rights reserved.

notice of all conflicts, errors, ambiguities, or discrepancies that Bidder discovers in the Bidding Documents and confirm that the written resolution is acceptable to Bidder;

I. determine that the Bidding Documents are generally sufficient to indicate and convey understanding of all terms and conditions for the performance and furnishing of the Work; and

J. agree that the submission of a Bid will constitute an incontrovertible representation by Bidder that Bidder has complied with every requirement of this Article, that without exception the Bid and all prices in the Bid are premised upon performing and furnishing the Work required by the Bidding Documents.

6.02 *Bidder certifies that:*

A. the Bid is genuine and not made in the interest of or on behalf of any undisclosed individual or entity and is not submitted in conformity with any collusive agreement or rules of any group, association, organization, or corporation.

B. the Bidder has not directly and indirectly induced or solicited any other Bidder to submit a false or sham Bid.

C. the Bidder has not solicited or induced any individual or entity to refrain from bidding.

D. the Bidder has not engaged in corrupt, fraudulent, collusive, or coercive practices in competing for the Contract. For the purposes of this Section:

1. "corrupt practice" means the offering, giving, receiving, or soliciting of any thing of value likely to influence the action of a public official in the bidding process;

2. "fraudulent practice" means an intentional misrepresentation of facts made (a) to influence the bidding process to the detriment of Owner, (b) to establish Bid prices at artificial non-competitive levels, or (c) to deprive Owner of the benefits of free and open competition;

3. "collusive practice" means a scheme or arrangement between 2 or more Bidders, with or without the knowledge of Owner, a purpose of which is to establish Bid prices at artificial, non-competitive levels; and

4. "coercive practice" means harming or threatening to harm, directly or indirectly, persons or their property to influence their participation in the bidding process or affect the execution of the Contract.

E. it and its affiliates have only submitted one Bid for any particular Work. Bidder further certifies that it does not share any key personnel with any other Bidder who is submitting a Bid for the same Work as Bidder. For the purposes of this Section:

1. "key personnel" means any owner, president, vice president, manger, or superintendent of Bidder.

ARTICLE 7—INTERPRETATIONS AND ADDENDA

7.01 *Questions*

A. Administrative questions shall be addressed to [CS name], Contract Specialist, via email to email@hrsd.com.

B. Bidder shall submit all questions about the meaning or intent of the Bidding Documents through HRSD's Online Oracle ERP system as an online discussion.

This document is a MODIFIED version of EJCDC® C-200, Instructions to Bidders for Construction Contract. Copyright© 2018 National Society of Professional Engineers, American Council of Engineering Companies, and American Society of Civil Engineers. All rights reserved.

7.02 *Addenda*

A. Addenda may be issued to clarify, correct, supplement, or change the Bidding Documents.

B. Interpretations or clarifications considered necessary by Engineer in response to such questions will be issued by Addenda via HRSD's Online Oracle ERP system and sent to all parties recorded as having received the Bidding Documents. Questions received less than 7 calendar days prior to the date for opening of Bids may not be answered.

C. Only responses set forth in Addenda will be binding. Oral and other interpretations or clarifications will be without legal effect. Responses to questions are not part of the Contract Documents unless set forth in Addenda that expressly modifies or supplements the Contract Documents.

ARTICLE 8—BID SECURITY

8.01 A Bid must be accompanied by Bid security made payable to Owner in an amount of 5 percent of Bidder's maximum Bid price (determined by adding the base bid and all alternates) and in the form of a certified check, bank money order, or a Bid bond issued by a surety meeting the requirements of Paragraph 6.01 and 6.02 of the General Conditions. Such Bid bond will be issued on the form included in the Bidding Documents.

8.02 A scanned copy of the Bid security shall be included with the Bid. If the Bidder chooses to provide a Bid security using a certified check or bank money order, the original check or money order shall be received by the Owner by the date and time of the Bid opening. The certified check or money order shall be mailed to: HRSD, PO Box 5911, Virginia Beach, VA 23471 and shall list the project name for which the security shall apply.

8.03 The Bid security of the apparent Successful Bidder will be retained until Owner awards the contract to such Bidder, and such Bidder has executed the Contract, furnished the required Contract security, and met the other conditions of the Notice of Award, whereupon the Bid security will be released. If the Successful Bidder fails to execute and deliver the Contract and furnish the required Contract security within 15 calendar days after the Notice of Award, Owner may consider Bidder to be in default, annul the Notice of Award, and the Bid security of that Bidder will be forfeited, in whole in the case of a penal sum bid bond, and to the extent of Owner's damages in the case of a damages-form bond. Such forfeiture will be Owner's exclusive remedy if Bidder defaults.

8.04 The Bid security of other Bidders that Owner believes to have a reasonable chance of receiving the award may be retained by Owner until the earlier of 7 calendar days after the Effective Date of the Contract or 61 calendar days after the Bid opening, whereupon Bid security furnished by such Bidders will be released.

ARTICLE 9—CONTRACT TIMES

9.01 The number of calendar days within which, or the dates by which, the Work is to be substantially completed and completed and ready for final payment (the Contract Times) are set forth in the Agreement.

ARTICLE 10—LIQUIDATED DAMAGES

10.01 Provisions for liquidated damages, if any, are set forth in the Agreement.

ARTICLE 11—SUBSTITUTE AND "OR EQUAL" ITEMS

11.01 The Contract for the Work, as awarded, will be on the basis of materials and equipment specified or described in the Bidding Documents without consideration during the bidding and Contract

This document is a MODIFIED version of EJCDC® C-200, Instructions to Bidders for Construction Contract. Copyright© 2018 National Society of Professional Engineers, American Council of Engineering Companies, and American Society of Civil Engineers. All rights reserved.

award process of possible substitute or "or-equal" items. In cases in which the Contract allows the Contractor to request that Engineer authorize the use of a substitute or "or-equal" item of material or equipment, application for such acceptance may not be made to and will not be considered by Engineer until after the Effective Date of the Contract.

11.02 All prices that Bidder sets forth in its Bid will be based on the presumption that the Contractor will furnish the materials and equipment specified or described in the Bidding Documents, as supplemented by Addenda. Any assumptions regarding the possibility of post-Bid approvals of "or-equal" or substitution requests are made at Bidder's sole risk.

ARTICLE 12—SUBCONTRACTORS, SUPPLIERS, AND OTHERS

12.01 A Bidder shall be prepared to retain specific Subcontractors, Suppliers, or other individuals or entities for the performance of the Work if required to do so by the Bidding Documents or in the Specifications. If a prospective Bidder objects to retaining any such Subcontractor, Supplier, or other individuals or entities and the concern is not relieved by an Addendum, then the prospective Bidder should refrain from submitting a Bid.

12.02 Subsequent to the submittal of the Bid, Owner may not require the Successful Bidder or Contractor to retain any Subcontractor, Supplier, or other individual or entity against which Contractor has reasonable objection.

12.03 The apparent Successful Bidder, and any other Bidder so requested, must submit to Owner a list of the Subcontractors, Suppliers, or other individuals or entities proposed for the Work within 48 hours after the Bid opening.

12.04 If requested by Owner, such list must be accompanied by an experience statement with pertinent information regarding similar projects and other evidence of qualification for each such Subcontractor, Supplier, or other individual or entity. If Owner or Engineer, after due investigation, has reasonable objection to any proposed Subcontractor, Supplier, or other individual or entity, Owner may, before the Notice of Award is given, request apparent Successful Bidder to submit an acceptable substitute, in which case apparent Successful Bidder will submit a substitute, Bidder's Bid price will not be increased by such substitution.

12.05 If apparent Successful Bidder declines to make any such substitution, Owner may award the Contract to the next lowest Bidder that proposes to use acceptable Subcontractors, Suppliers, other individuals or entities. Declining to make requested substitutions will constitute grounds for forfeiture of the Bid security of any Bidder. Any Subcontractor, Supplier, or other individual or entity, so listed and against which Owner or Engineer makes no written objection prior to the giving of the Notice of Award will be deemed acceptable to Owner and Engineer subject to subsequent revocation of such acceptance as provided in Paragraph 7.07 of the General Conditions.

ARTICLE 13—PREPARATION OF BID

13.01 Electronic Bids shall be submitted through HRSD's Online Oracle ERP system by an authorized representative. The online submittal certifies that the Bidder is an agent or officer authorized to bind the company to the terms and conditions of the solicitation.

A. All required fields shall be complete. A Bid price shall be indicated for each section, Bid item, alternate, adjustment unit price item, and unit price listed therein.

B. If the Bid Form expressly indicates that submitting pricing on a specific alternate item is optional, and Bidder elects to not furnish pricing for such optional alternate item, then Bidder may enter the words "No Bid" or "Not Applicable."

This document is a MODIFIED version of EJCDC® C-200, Instructions to Bidders for Construction Contract. Copyright© 2018 National Society of Professional Engineers, American Council of Engineering Companies, and American Society of Civil Engineers. All rights reserved.

13.02 A Bid by a corporation shall be submitted in the corporate name by a corporate officer or authorized agent. Owner may request evidence of authority to sign. The corporate address and state of incorporation shall be provided.

13.03 A Bid by a partnership shall be submitted in the partnership name by a partner. Owner may request evidence of authority to sign. The official address of the partnership shall be provided.

13.04 A Bid by a limited liability company shall be submitted in the name of the firm by a member or other authorized person. Owner may request evidence of authority to sign. The state of formation of the firm and the official address of the firm shall be provided.

13.05 A Bid by an individual must show the Bidder's name and official address.

13.06 A Bid by a joint venture (JV) shall be submitted by an Authorized Representative of the JV. Owner may request evidence of authority to sign. The joint venturers shall provide details of their interest in the relationship and the official name and address of the JV, as an attachment to the Bid in HRSD's Online Oracle ERP system.

A. The JV needs to be fully and properly established with a Federal Tax Identification Number prior to submittal of a Bid.

B. Each individual member of the JV must be registered with the State Corporation Commission (SCC) in accordance with §2.2-4311.2 of the Code of Virginia.

C. The Bid can be submitted in HRSD's Online Oracle ERP system by an Authorized Representative from one of the joint venturers and the JV supplier registration in HRSD's Online Oracle ERP system shall be required after Commission approval and prior to Contract award. If the JV supplier registration has already been approved in HRSD's Online Oracle ERP system, the Bid shall be submitted under the JV.

D. Owner, in its sole discretion, reserves the right to determine that the information provided regarding the status of the JV is acceptable and meets the intent stated above.

13.07 The Bidder shall acknowledge receipt of all Addenda.

13.08 The Bid shall contain evidence of Bidder's authority and qualification to do business in the Commonwealth of Virginia. The Virginia Registered Contractor License Number shall be provided.

13.09 A Bidder organized as a stock or non-stock corporation, limited liability company, business trust, general partnership, limited partnership, or registered as a limited liability partnership must be authorized to transact business in the Commonwealth of Virginia as a domestic or foreign business entity if so required by Title 13.1 and/or Title 50 of the Code of Virginia or as otherwise required by law. A Bidder organized or authorized to transact business in the Commonwealth of Virginia pursuant to Title 13.1 and/or Title 50 of the Code of Virginia shall provide the State Corporation Commission (SCC) Identification Number.

13.10 Any Bidder that is not required to be authorized to transact business in the Commonwealth of Virginia as a foreign business entity under Title 13.1 and/or Title 50 of the Code of Virginia or as otherwise required by law shall include a statement describing why the Bidder is not required to be so authorized. Any Bidder described herein that fails to provide the required information shall not receive an award unless a waiver of this requirement has been granted by the HRSD General Manager.

ARTICLE 14—BASIS OF BID

14.01 *Lump Sum*

This document is a MODIFIED version of EJCDC® C-200, Instructions to Bidders for Construction Contract. Copyright© 2018 National Society of Professional Engineers, American Council of Engineering Companies, and American Society of Civil Engineers. All rights reserved.

A. Bidders shall submit a Bid on a lump sum basis as set forth in the Bid Form.

[or]

14.02 *Base Bid with Alternates {Updated as needed for the Project}*

A. Bidders shall submit a Bid for the base Bid and include a separate price for each alternate described in the Bidding Documents and as provided for in the Alternate Bid Items Form, Attachment [#] provided in Article [#]. The price for each alternate will be the amount added to or deleted from the base Bid if Owner selects the alternate.

B. In the comparison of Bids, Owner will review the Base Bid only and the alternate items will only be used if in the best interest of HRSD.

[or]

14.03 *Unit Price*

A. Bidders shall submit a Bid on a unit price basis for each item of Work listed in the unit price section of the Bid Form.

B. The "Bid Price" (sometimes referred to as the extended price) for each unit price Bid item will be the product of the "Estimated Quantity", which Owner or its representative has set forth in the Bid Form, for the item and the corresponding "Bid Unit Price" offered by the Bidder. The total of all unit price Bid items will be the sum of these "Bid Prices"; such total will be used by Owner for Bid comparison purposes. The final quantities and Contract Price will be determined in accordance with Paragraph 13.03 of the General Conditions.

14.04 *Allowances*

A. For cash allowances the Bid price shall include such amounts as the Bidder deems proper for Contractor's overhead, costs, profit, and other expenses on account of cash allowances, if any, named in the Contract Documents, in accordance with Paragraph 13.02.B of the General Conditions.

ARTICLE 15—SUBMITTAL OF BID

15.01 A Bid shall be received no later than the date and time prescribed in the Advertisement or invitation to bid. Bids shall only be accepted through HRSD's Online Oracle ERP system. Failure to submit a response through the ERP website will be cause for rejection by HRSD.

15.02 Bids received after the date and time prescribed for the opening of bids or not submitted in the designated manner will not be accepted. HRSD shall not be responsible for late or lost responses due to an improper online submittal by Bidder.

15.03 If there are difficulties logging into or using HRSD's Online Oracle ERP system, please contact the ERP Help Desk at (757) 460-7318 or erphelp@hrsd.com for assistance.

ARTICLE 16—MODIFICATION AND WITHDRAWAL OF BID

16.01 A Bid may be withdrawn prior to the date and time of the opening of Bids through HRSD's Online Oracle ERP system.

16.02 If a Bidder wishes to modify its Bid prior to Bid opening, Bidder must withdraw its initial Bid in the manner specified in Paragraph 15.01 and submit a new Bid prior to the date and time for the opening of Bids.

16.03 A Bidder may withdraw its Bid due to error, in accordance with §2.2-4330 of the Code of Virginia and the Bid security will be returned if Bidder files a duly signed written notice with original

This document is a MODIFIED version of EJCDC® C-200, Instructions to Bidders for Construction Contract. Copyright© 2018 National Society of Professional Engineers, American Council of Engineering Companies, and American Society of Civil Engineers. All rights reserved.

working papers within 2 calendar days after Bids are opened and those documents demonstrate to the reasonable satisfaction of the Owner that there was a material and substantial mistake in the preparation of its Bid. Thereafter, that Bidder will be disqualified from further bidding or providing any material, labor, or subcontract work on the Work to be provided under the Contract Documents.

ARTICLE 17—OPENING OF BIDS

17.01 Bids will be opened virtually at the date and time indicated in the Advertisement or invitation to bid. An abstract of the amounts of the base Bids and major alternates, if any, will be made available online to Bidders after the opening of Bids at HRSD's website at https://www.hrsd.com/bids-and-rfps.

ARTICLE 18—BIDS TO REMAIN SUBJECT TO ACCEPTANCE

18.01 All Bids will remain subject to acceptance for 60 calendar days after the Bid opening or for such longer period of time that Bidder may agree to in writing upon request of Owner. Owner may, in its sole discretion, release any Bid and return the Bid security prior to the end of this period.

ARTICLE 19—EVALUATION OF BIDS

19.01 Owner reserves the right to reject any or all Bids, including without limitation, nonconforming, nonresponsive, unbalanced, or conditional Bids. Owner also reserves the right to waive all minor Bid informalities not involving price, time, or changes in the Work.

19.02 Owner will reject the Bid of any Bidder that Owner finds, after reasonable inquiry and evaluation, to not be responsible.

19.03 If Bidder purports to add terms or conditions to its Bid, takes exception to any provision of the Bidding Documents, or attempts to alter the contents of the Contract Documents for purposes of the Bid, whether in the Bid itself or in a separate communication to Owner or Engineer, then Owner will reject the Bid as nonresponsive.

19.04 If Owner awards the contract for the Work, such award will be to the responsible Bidder submitting the lowest responsive Bid.

19.05 More than one Bid for the same Work from an individual or entity under the same or different names will not be considered. Reasonable grounds for believing that any Bidder has an interest in more than one Bid for the Work may be cause for disqualification of that Bidder and the rejection of all Bids in which that Bidder has an interest.

19.06 *Evaluation of Bids*

A. In evaluating Bids, Owner will consider whether the Bids comply with the prescribed requirements, and such alternates, unit prices, and other data, as may be requested in the Bid Form or prior to the Notice of Award.

B. In evaluating whether a Bidder is responsible, Owner will consider the qualifications of the Bidder and may consider the qualifications and experience of Subcontractors, Suppliers, other individuals and entities proposed for those portions of the Work for which the identity of Subcontractors, Suppliers, other individuals and entities must be submitted as provided in the Bidding Documents.

19.07 Owner may conduct such investigations as Owner deems necessary to establish the responsibility, qualifications, safety record, and financial ability of Bidders and any proposed Subcontractors, Suppliers, other individuals and entities.

This document is a MODIFIED version of EJCDC® C-200, Instructions to Bidders for Construction Contract. Copyright© 2018 National Society of Professional Engineers, American Council of Engineering Companies, and American Society of Civil Engineers. All rights reserved.

ARTICLE 20—NEGOTIATION WITH THE LOWEST RESPONSIBLE BIDDER

20.01 Owner may negotiate with the lowest responsible Bidder to obtain a Contract within available funds if the lowest responsive Bid exceeds available funds. Such negotiation may be undertaken if approved in writing by HRSD's General Manager and must be based on a project cost estimate prepared prior to issuance of the Advertisement for Bids.

ARTICLE 21—BONDS AND INSURANCE

21.01 Article 6 of the General Conditions, as may be modified by the Supplementary Conditions, sets forth Owner's requirements as to performance and payment bonds, other required bonds, if any, and insurance. When the Successful Bidder delivers the executed Agreement to Owner, it must be accompanied by required bonds and insurance documentation.

21.02 Article 8, Bid Security, of these Instructions, addresses any requirements for providing bid bonds as part of the bidding process.

ARTICLE 22—AWARD OF CONTRACT AND SIGNING OF AGREEMENT

22.01 *Award of Contract*: The Director of Engineering shall submit the Agreement to the General Manager for approval, and the General Manager shall submit the Agreement to the Commission for approval of award.

22.02 *Signing of Agreement*: After the Commission approves the award of contract, the Owner will issue a Notice of Award to the Successful Bidder, it will be accompanied by the Agreement along with the other Contract Documents as identified in the Agreement. Within 15 calendar days thereafter, Successful Bidder shall deliver any bonds and insurance documentation required to be delivered by the Contract Documents to Owner. Within 10 calendar days thereafter, Owner shall transmit the Agreement through HRSD's Enterprise Project Management (Unifier) system. Successful Bidder's acknowledgment in HRSD's Unifier system represents signature and acceptance of the terms and conditions of the Agreement.

ARTICLE 23—[OPTIONAL-Projects for abating or preventing air or water pollution] TAXES

23.01 Bidders are advised that this is a pollution control project and as such certain materials and equipment will be exempt from Virginia sales tax in accordance with Section 58.1-3660 of the Code of Virginia, as amended, upon a request by the Successful Bidder to the HRSD Contract Specialist. Information to be submitted via email (a) Project Title, (b) Project Location, (c) Anticipated Project Completion Date, and (d) Description/List of the equipment and facilities to be purchased.

ARTICLE 24—RETAINAGE

24.01 Provisions concerning retainage are set forth in the Agreement.

ARTICLE 25— [OPTIONAL – USE IF HRSD SUPPLIES EQUIPMENT/MATERIALS] CONTRACTS TO BE ASSIGNED

25.01 Owner (Buyer) [has executed/will execute] a contract with [Name] (Seller) for the procurement of goods and special services for [Name]. The materials and equipment provided for in the procurement contract are to be furnished and delivered to the Site [or other location] for installation by Contractor. The said procurement contract will be assigned by Owner to Contractor as set forth in the Agreement. Contractor will accept the assignment and assume responsibility for the Seller, who will become a Subcontractor to Contractor. {Use P520 Agreement Form – get with Contract Specialist}

25.02 Bidders may examine the Contract Documents for the procurement of goods and special services

This document is a MODIFIED version of EJCDC® C-200, Instructions to Bidders for Construction Contract. Copyright© 2018 National Society of Professional Engineers, American Council of Engineering Companies, and American Society of Civil Engineers. All rights reserved.

for [Item] at [Location] – or – [as Other Exhibits to the Agreement – if using P520 Agreement Form].

ARTICLE 26—[OPTIONAL] PARTNERING

26.01 Owner intends to participate in a partnering process with Contractor. The process is intended to help develop better and more effective communication and mutual understanding of common goals. The objectives of the process will be to achieve effective and efficient performance of the Work and completion of the Work within the Contract Price and Contract Times, all in accordance with the Contract Documents.

26.02 Participation in the partnering process will be voluntary. To initiate the process, within [number] calendar days after the Notice to Proceed the key personnel of Owner, Engineer, Contractor, and Contractor's major Subcontractors will be invited to attend a [number] day seminar and team building workshop to develop a partnering statement. The seminar and the workshop will be conducted by a neutral facilitator at a time and location agreed to by Owner and Contractor in the general vicinity of the Site.

26.03 The facilitator will be selected by Owner, subject to approval by Contractor. All facilitator-related and facilities costs will be shared equally by Owner and Contractor with no change in the Contract Price or Contract Time. Each party will pay all costs associated with the participation of its own personnel.

26.04 It is intended that the initial seminar and workshop sessions be followed by periodic [half/one] day evaluation sessions approximately every [number] calendar days as agreed to by Owner and Contractor.

26.05 These provisions express the intent and spirit of the partnering process, and nothing stated herein or in the partnering statement shall change in any way the rights, responsibilities, and obligations of the parties as set forth in the Contract Documents. The partnering statement will not be a part of the Contract Documents and will not modify any defense, claim, obligation, or right that otherwise exists.

ARTICLE 27—[OPTIONAL] PROJECT FUNDING

27.01 **[OPTIONAL]** *Virginia Clean Water Revolving Loan Fund (VCWRLF) Program Requirements*

A. This project is funded in part under the VCWRLF. Bidders must be familiar with and in compliance with the additional requirements associated with this funding source and must provide the required documentation.

B. Bidders shall comply with the President's Executive Order No. 11246 (Prohibiting discrimination in employment regarding race, color, creed, sex or national origin), No. 12138 and No. 11625 (Regarding MBE/WBE utilization). Bidders shall also comply with the Civil Rights Act of 1964.

C. Bidders must certify that they do not and will not maintain or provide for their employees any facilities that are segregated on basis of race, color, creed, sex or national origin.

D. *Affirmative Steps*: Activities during preparation of proposals. Bidders shall take affirmative steps in compliance with the regulations, prior to submission of proposals, to encourage participation in Projects by MBE/WBE firms. Such efforts include:

1. Establish and maintain a current solicitation list of minority and female recruitment sources and assure MBE/WBE firms are solicited once they are identified.

2. When feasible, segmenting total work requirements to permit maximum MBE/WBE

This document is a MODIFIED version of EJCDC® C-200, Instructions to Bidders for Construction Contract. Copyright© 2018 National Society of Professional Engineers, American Council of Engineering Companies, and American Society of Civil Engineers. All rights reserved.

participation and establish delivery schedules to encourage MBE/WBE participation.

3. Assuring that MBE/WBE firms are solicited whenever they are potential sources of goods and services. This step may include:

   a. Sending letters or making other personal contact with MBE/WBE firms, private agencies and state associations (e.g. – whose names appear on lists prepared by the United States Environmental Protection Agency (EPA) or the recipient and other MBE/WBE known to the Bidder). MBE/WBE firms should be contacted when other potential subcontractors are contacted, within reasonable time prior to bid submission or closing date for receipt of initial offers. Those letters or other contacts should communicate the following:

      1) Specific description of the work to be contracted.

      2) How and where to obtain a copy of plans and specifications or other detailed information needed to prepare a detailed price quotation.

      3) Date the quotation is due to the Bidder.

      4) Name, address, and phone number of the person in the Bidder's firm whom the prospective MBE/WBE subcontractor should contact for additional information.

   b. Using the services and assistance of the Small Business Administration and the Office of Minority Business Enterprise of the United States Department of Commerce.

E. Bidders must demonstrate compliance with MBE/WBE requirements to be deemed responsible. Successful Bidders shall provide documentation on MBE/WBE solicitation efforts as detailed in the VCWRLF – 2016 Contract Inserts and complete the "Bidder Compliance Statement/Certification Regarding Equal Employment Opportunity". Demonstration of compliance may include the following information; however, the recipient may specify other methods of demonstrating compliance:

   1. Provide the names, addresses, and telephone numbers of MBE/WBE firms expected to perform work.

   2. Describe the type work to be performed by the MBE/WBE firms.

   3. Provide the aggregate dollar amount of work to be performed by MBE/WBE firms, showing aggregate to MBE's and aggregate to WBE's separately.

   4. Include description of contracts to MBE/WBE organizations, agencies, and associations which service MBE/WBE firms, including names of organizations, agencies, and associations and dates of contacts.

   5. Include description of contacts to MBE/WBE firms, including number of contacts, fields (e.g. – equipment or material supplier, excavators, transport services, electrical subcontractors, plumbers, etc.) and dates of contacts.

F. Successful Bidders should take reasonable affirmative steps to subcontract with MBE/WBE firms whenever additional subcontracting opportunities arise during the performance of the contract.

G. Successful Bidders shall provide a signed copy of Attachment #6 from the VCWRLF – 2016 Contract Inserts titled, "American Iron and Steel (AIS) Certification Statement".

This document is a MODIFIED version of EJCDC® C-200, Instructions to Bidders for Construction Contract. Copyright© 2018 National Society of Professional Engineers, American Council of Engineering Companies, and American Society of Civil Engineers. All rights reserved.

27.02 **[OPTIONAL]** *Water Infrastructure Finance and Innovation Act (WIFIA) Program Requirements*

A. This project is being funded in part under the WIFIA program. Bidders must be familiar with and in compliance with the additional requirements associated with this funding source and must provide the required documentation.

B. Bidders shall comply with the President's Executive Order No. 12549 (Debarment and suspension) and United States Code Title 31, Section 1352 (Limitation on use of appropriated funds to influence certain Federal contracting and financial transactions). Successful Bidder shall complete and submit Appendix A and Appendix B to Part B in the WIFIA – Final Contract Inserts package.

C. Bidders shall comply with the following federal non-discrimination requirements:

1. Title VI of the Civil Rights Act of 1964, which prohibits discrimination based on race, color, and national origin, including limited English proficiency (LEP).
2. Section 504 of the Rehabilitation Act of 1973, which prohibits discrimination against persons with disabilities.
3. The Age Discrimination Act of 1975, which prohibits age discrimination.
4. Section 13 of the Federal Water Pollution Control Act Amendments of 1972, which prohibits discrimination on the basis of sex.
5. Title 40, Part 7 of the Code of Federal Regulations, as it relates to the foregoing.
6. President's Executive Order No. 11246, which prohibits discrimination in employment regarding race, color, creed, sex, or national origin.

D. *Affirmative Steps*: Activities during preparation of proposals. Bidders shall take affirmative steps in compliance with the regulations, prior to submission of proposals, to encourage participation in Projects by MBE/WBE firms. Such efforts include:

1. The "Equal Opportunity Clause" and "Standard Federal Equal Employment Specifications" detailed in the WIFIA – Contract Inserts.
2. The goals and timetables for MBE/WBE participation, expressed in percentage terms for the Contractor's aggregated workforce for each trade on all construction work in the covered area, are as follows:

Time-tables	**Goals for minority participation for each trade**[1]	**Goals for female participation in each trade**[2]
End of Contract	[UPDATE USING FINAL INSERTS]	6.9%

3. The hours of MBE/WBE firm employment and training must be substantially uniform throughout the length of the contract, and in each trade, and the Contractor shall make a good faith effort to employ MBE/WBE firms evenly on each of its projects.
4. Bidders must demonstrate compliance with MBE/WBE requirements to be deemed responsible. Successful Bidder shall provide documentation on MBE/WBE solicitation efforts as detailed in the WIFIA – Contract Inserts and complete the "Bidder Compliance

[1] Goals can be found at: https://www.dol.gov/ofccp/TAguides/TAC_FedContractors_JRF_QA_508c.pdf
[2] Nationwide goal for all covered areas

This document is a MODIFIED version of EJCDC® C-200, Instructions to Bidders for Construction Contract. Copyright© 2018 National Society of Professional Engineers, American Council of Engineering Companies, and American Society of Civil Engineers. All rights reserved.

Statement/Certification Regarding Equal Employment Opportunity". The WIFIA program is to incorporate six (6) good faith efforts during contract and subcontract procurement and maintain document of efforts. Demonstration of compliance may include the following information; however, the recipient may specify other methods of demonstrating compliance:

a. Provide the names, addresses, telephone numbers, and employer identification of MBE/WBE firms expected to perform work.

b. Describe the work to be performed by the MBE/WBE firms.

c. Provide the estimated dollar amount of work to be performed by MBE/WBE firms.

d. Provide the estimated starting and completion dates of the subcontract.

e. Provide the geographical area in which the subcontract is to be performed.

E. Successful Bidder shall comply with the American Iron and Steel Requirements; complete and submit Appendix D to Part I in the WIFIA – Final Contract Inserts package.

F. Successful Bidder shall comply with the Davis Bacon and Related Acts.

G. HRSD is preparing all documents for the WIFIA application including National Environmental Policy Act (NEPA) documentation.

ARTICLE 28—ATTACHMENT(S)

28.01 Attachment 1: HRSD Special COVID-19 Notice: Site Visits, Current and Future Contract Awards (Updated Month Year)

28.02 [OPTIONAL] Attachment 2: Alternate Bid Items Form

This document is a MODIFIED version of EJCDC® C-200, Instructions to Bidders for Construction Contract. Copyright© 2018 National Society of Professional Engineers, American Council of Engineering Companies, and American Society of Civil Engineers. All rights reserved.

QUESTIONNAIRE

The undersigned guarantees the accuracy of all statements and answers herein contained. Contractor shall provide answers in order on separate sheet except where fill one blank or yes/no checks suffice.

1. How many years has your firm been in business as a General Contractor?

   ____ years

2. List at least 3 projects similar in nature to this project that you have completed. Provide project information addressing the qualifications identified in Article 3 of the Instructions to Bidders. For each project include:

   a. The original contract date and time.

   b. The final contract time.

   c. The original contract cost.

   d. The final contract cost.

   e. Name, address, phone number, and contact for the Consulting Engineer or Registered Architect and Owner Representative involved with the project.

3. List projects presently under construction by your firm, dollar value of the contract, and the percent of completion.

4. Have you ever performed work for a public body such as the Hampton Roads Sanitation District previously? If yes, list the public body and name of the project for the three most recent projects. (If all such entities are listed under 2, this question need not be completed.)

   _____Yes _____No

5. Have you ever failed to complete work awarded to you? If yes, state where and explain why on separate sheet.

   _____Yes _____No

6. Do you plan to use subcontractors for any part of this work? If yes, give details.

   _____Yes _____No

7. What equipment do you own that is available for this work?

8. What equipment do you plan to rent or purchase for this work?

9. Give the name, address and telephone number of an individual who represents each of

the following and who the Owner or Engineer may contact to investigate your financial responsibility:

a. Surety Name_____

Contact Name_____

Address _____

_____

Phone Number _____

b. Bank Name_____

Contact Name_____

Address _____

_____

Phone Number _____

c. Material Supplier Name_____

Contact Name_____

Address _____

_____

Phone Number _____

10. List all formal claims made, requests for equitable contract adjustments submitted, arbitrations, or legal actions taken by Contractor against any Owner within the last five years. Include Owner, project title, amounts of disputes, and final disposition with explanations, as appropriate.

11. List any projects on which liquidated damages were assessed within the past five years.

12. Has your firm or any of its officers, employees or agents ever been suspended or debarred from any Federal, State or local procurement? If yes, provide details.

_____Yes _____No

13. List your firm's designated safety representative(s) and **attach an OSHA 300 form** (Log and Summary of Occupational Injuries and Illnesses), as appropriate, **covering the past 5 years**.

_____

14. Provide a copy of your most recent financial statement.

15. State the true, exact, correct and complete name of the partnership, corporation or trade name under which you do business, and the address of the place of business. (If a corporation, state the name of the President and Secretary. If a partnership, state the names of all partners. If a trade name, state the names of the individuals who do business under the trade name.) It is absolutely necessary that this information be furnished.

_____
Correct Name of Bidder

a. The business is a _____

b. The address of the principal place of business is:

_____

_____

c. The names of the corporate officers, partners, or individuals doing business under a trade name, are as follows:

_____

_____

16. **[OPTIONAL-Project Funding]** The Bidder has reviewed the Davis-Bacon wage determination provided.

_____Yes _____No

Please list, if any, classifications that are missing from the Davis-Bacon wage determination provided:

_____

_____

17. **[OPTIONAL-VCWRLF]** Provide documentation on Minority and Women's Business Enterprises (MBE/WBE) solicitation efforts as detailed in Article 27 [Verify Article Number] of the Instructions To Bidders and the Virginia Clean Water Revolving Loan Fund (VCWRLF) 2016 – Contract Inserts and complete the attached "Bidder Compliance Statement/Certification Regarding Equal Employment Opportunity".

a. Provide the names, addresses, and telephone numbers of MBE/WBE firms expected to perform work.

b. Describe the type of work to be performed by MBE/WBE firms.

c. Provide the aggregate dollar amount of work to be performed by MBE/WBE firms, showing aggregate to MBE's and aggregate to WBE's separately.

d. Include description of contacts to MBE/WBE organizations, agencies, and associations which serve MBE/WBE firms, including names of organizations, agencies, and associations and dates of contacts.

e. Include descriptions of contacts MBE/WBE firms, including number of contacts, fields (e.g. – equipment or material supplier, excavators, transport services, electrical subcontractors, plumbers, etc.) and dates of contacts.

18. **[OPTIONAL-WIFIA]** Provide documentation on Minority and Women's Business Enterprises (MBE/WBE) solicitation efforts as detailed in Article 27 [Verify Article Number] of the Instructions To Bidders and the Water Infrastructure Finance and Innovation Act (WIFIA) – Final Contract Inserts and complete the attached "Bidder Compliance Statement/Certification Regarding Equal Employment Opportunity".

a. Provide the names, addresses, telephone numbers, and employer identification of MBE/WBE firms expected to perform work.

b. Describe the work to be performed by the MBE/WBE firms.

c. Provide the estimated dollar amount of work to be performed by MBE/WBE firms.

d. Provide the estimated starting and complete dates of the subcontract.

e. Provide the geographical area in which the subcontract is to be performed.

Dated this _____ day of _____ 20 __.

_____

_____

By_____

[OPTIONAL-PROJECT FUNDING] BIDDER COMPLIANCE STATEMENT/ CERTIFICATION REGARDING EQUAL EMPLOYMENT OPPORTUNITY

This statement relates to a proposed contract between _____ (contractor) and Public Body) or (subcontract between _____ (subcontractor) and _____ (contractor)) to be funded under a federally assisted project. Pursuant to Executive Order 11246 and its implementing regulations at 41 CFR 60-1.7(b)(1), as the undersigned bidder, I certify that:

1) Bidder has participated in a previous contract or subcontract subject to the Equal Opportunity Clause.

   _____Yes _____No

2) Bidder has developed and has on file at each establishment affirmative action programs pursuant to 41 CFR 60-2 (applies only to non-construction contractor).

   _____Yes _____No

3) Bidder has filed with the Joint Reporting Committee, the Director (Office of Federal Contract Compliance Programs, U.S. Department of Labor), and agency, or the Equal Employment Opportunity Commission, all reports due under the applicable filing requirements.

   _____Yes _____No

I understand that if I have failed to file any compliance reports which have been required of me, or have failed to develop and have on file at each establishment affirmative action programs pursuant to 41 CFR 60-2, when required, I am not eligible to have my bid or proposal considered, or to enter into the proposed contract.

I further understand that if awarded the proposed contract, and the contract for the FIRST time brings me under the filing requirements of the written affirmative action programs that I will, as applicable: (a) within 30 days file with the Public Body Standard Form 100 (EEO-1); and (b) within 120 days from the commencement of the contract develop and submit to the Director of OFCCP for approval a Written Affirmative Action Plan.

NAME AND ADDRESS OF BIDDER (Include ZIP Code):

NAME AND TITLE OF SIGNER (Please Type):

SIGNATURE: DATE:

BID BOND

BOND NO. _____

AMOUNT: 5% of Bid amount_____

KNOW ALL MEN BY THESE PRESENTS, that _____ hereinafter called the PRINCIPAL, and _____ a corporation duly organized under the laws of the State of _____ having its principal place of business at _____ in the State of _____ and authorized to do business in the Commonwealth of Virginia, as Surety, are held and firmly bound unto Hampton Roads Sanitation District, as OWNER, hereinafter called the OBLIGEE, in the sum of 5% of bid amount for the payment for which we bind ourselves, our heirs, executors, administrators, successors, and assigns, jointly and severally, firmly by these presents.

THE CONDITION OF THIS BOND IS SUCH THAT:

WHEREAS, the PRINCIPAL is herewith submitting his or its Bid for [PROJECT NAME]

said Bid, by reference thereto, being hereby made a part hereof.

NOW, THEREFORE, the conditions of this obligation are as follows: This Bid Bond shall guarantee that the Principal will not withdraw the Bid during the period of 60 calendar days following the opening of Bids; that if the Bid is accepted, Principal will enter into a formal Agreement with the Owner in accordance with the Instructions to Bidders; that Principal will submit a properly executed and authorized Performance Bond and Payment Bond on the forms included in the Instructions to Bidders; and that in the event of the withdrawal of said Bid within said period, or failure to enter into said Agreement and give said bonds within 15 calendar days after Principal has received notice of acceptance of the Bid, Principal and Surety shall be jointly and severally liable to the Owner for the difference between the amount specified in said Bid and such larger amount for which the Owner may contract with another party to perform the work covered by said Bid, up to the amount of the Bid guarantee. This amount represents the damage to the Owner on account of the default of the Bidder in any particular thereof. It being expressly understood and agreed that the liability of the Surety for any and all claims hereunder shall, in no event, exceed the said amount of this obligation as herein stated. Provided, however, that in addition to the amount of this obligation as herein stated, the Surety shall be liable for all costs and attorney's fees incurred by the Obligee in enforcing the obligations hereunder.

The Surety, for value received, hereby stipulates and agrees that the obligations of the Surety and its bond shall be in no way impaired or affected by any extension of the time within which the Owner may accept such bid; and the Surety does hereby waive notice of such extension.

IN WITNESS WHEREOF, the Principal and the Surety have hereunto set their hands and seals, and such of them as are corporations have caused their corporate seals to be hereto affixed and these presents to be signed by their proper officers, the day and year set forth below.

By signing your name electronically below, you are agreeing that your electronic signature is the legal equivalent of your physical signature on this form. A paper copy of this form is not required at this time. Owner reserves the right to ask for a paper copy of this form at a later date.

Signed and sealed this ____ day of _____ , 20 __ .

PRINCIPAL

By_____

SURETY

By_____
Attorney-In-Fact

IMPORTANT: The Surety executing bonds must appear on the Treasury Department's most current list (Circular 570 as amended) and be authorized to transact business in the Commonwealth of Virginia.

CONTRACT FORMS

AGREEMENT BETWEEN OWNER AND CONTRACTOR FOR CONSTRUCTION CONTRACT

THIS AGREEMENT is by and between Hampton Roads Sanitation District (HRSD) (Owner), and [name] (Contractor).

PROJECT INFORMATION

Construction Contract: [name] *[Owner's identification number]* (Contract)

Authorized Representatives: Owner and Contractor each hereby designates a specific individual authorized to act as representative with respect to the performance of responsibilities under this Agreement. Such an individual shall have authority to transmit instructions, receive formal notices, receive information, and render decisions relative to this Agreement on behalf of the respective party that the individual represents.

1. Owner's Authorized Representative:

   [Name], [Title – Chief of Design and Construction or Director of Engineering]
   [Address]
   (757) [Number]; [email]@hrsd.com

2. Contractor's Authorized Representative:

   [Name], [Title]
   [Address]
   [Phone Number]; [Email Address]

Owner and Contractor further agree as follows:

ARTICLE 1 – THE WORK

1.01 *General Description of Work*

A. Contractor shall complete all Work as specified or indicated in the Contract Documents. The Work is generally described as follows: [Add project information].

ARTICLE 2 – ENGINEER

2.01 *The Owner has retained [Name] (Engineer) to act as Owner's representative, assume all duties and responsibilities of Engineer, and have the rights and authority assigned to Engineer in the Contract Documents in connection with the completion of the Work in accordance with the Contract Documents.*

2.02 *The part of the Project that pertains to the Work has been designed by [Name].*

ARTICLE 3 – CONTRACT TIMES

3.01 *Time is of the Essence*

A. All time limits for Milestones, if any, Substantial Completion, and completion and readiness for final payment, as stated in the Contract Documents, are of the essence of the Contract.

3.02 *Contract Times [Dates]*

A. The Work will be substantially complete on or before [date], and completed and ready for final payment in accordance with Paragraph 15.06 of the General Conditions on or before

This document is a MODIFIED version of EJCDC® C-520, Agreement Between Owner and Contractor for Construction Contract (Stipulated Price). Copyright © 2016 National Society of Professional Engineers, American Council of Engineering Companies, and American Society of Civil Engineers. All rights reserved.

[date].

[or]

3.02 *Contract Times [Days]*

A. The Work will be substantially complete within [number] calendar days after the date when the Contract Times commence to run as provided in Paragraph 4.01 of the General Conditions, and completed and ready for final payment, in accordance with Paragraph 15.06 of the General Conditions, within [number] calendar days after the date when the Contract Times commence to run.

3.03 ***[OPTIONAL]*** *Milestones*

A. Parts of the Work must be substantially completed on or before the following Milestone[s]:

1. Milestone 1 [event & date/ calendar days].
2. Milestone 2 [event & date/calendar days].
3. Milestone 3 [event & date/calendar days].

3.04 *Liquidated Damages*

A. Contractor and Owner recognize that time is of the essence as stated in Paragraph 3.01 above, and that Owner will suffer financial and other losses if the Work is not completed and Milestones (if applicable) not achieved within the Contract Times, as duly modified. The parties also recognize the delays, expense, and difficulties involved in proving, in a lawsuit or arbitration proceeding, the actual loss suffered by Owner if the Work is not completed on time. Accordingly, instead of requiring any such proof, Owner and Contractor agree that as liquidated damages for delay (but not as a penalty):

1. *Substantial Completion*: Contractor shall pay Owner $[number] for each calendar day that expires after the time (as duly adjusted pursuant to the Contract) specified in Paragraph 3.02 above for Substantial Completion, until the Work is substantially complete.
2. *Completion of Remaining Work*: After Substantial Completion, if Contractor shall neglect, refuse, or fail to complete the remaining Work within the Contract Times (as duly adjusted pursuant to the Contract) for completion and readiness for final payment, Contractor shall pay Owner $[number] for each calendar day that expires after such time until the Work is completed and ready for final payment.
3. **[OPTIONAL]** *Milestones*: Contractor shall pay Owner $[amount] for each calendar day that expires after the time (as duly adjusted pursuant to the Contract) specified above for achievement of Milestone 1, until Milestone 1 is achieved.
4. Liquidated damages for failing to timely attain Substantial Completion, final completion, and Milestones (if applicable) are not additive, and will not be imposed concurrently. Liquidated damages for failing to attain Substantial Completion shall take precedence.

B. If Owner recovers liquidated damages for a delay in completion by Contractor, then such liquidated damages are Owner's sole and exclusive remedy for such delay, and Owner is precluded from recovering any other damages, whether actual, direct, excess, or consequential, for such delay, except for special damages (if any) specified in this Agreement.

C. **[OPTIONAL]** *Bonus*: Contractor and Owner further recognize that the Owner will realize financial and other benefits if the Work is completed prior to the time specified for

This document is a MODIFIED version of EJCDC® C-520, Agreement Between Owner and Contractor for Construction Contract (Stipulated Price). Copyright © 2016 National Society of Professional Engineers, American Council of Engineering Companies, and American Society of Civil Engineers. All rights reserved.

Substantial Completion. Accordingly, Owner and Contactor agree that as a bonus for early completion, Owner shall pay Contractor $[amount] for each calendar day prior to the time specified above in Paragraph 3.02 for Substantial Completion [as set forth in this Agreement as of the Effective Date] or [as duly adjusted pursuant to the Contract] that the Work is substantially complete. The maximum value of the bonus shall be limited to $[amount].

3.05 *Special Damages*

A. In addition to the amount provided for liquidated damages, Contractor shall reimburse Owner (1) for any fines or penalties imposed on Owner as a direct result of the Contractor's failure to attain Substantial Completion according to the Contract Times, and (2) for the actual costs reasonably incurred by Owner for engineering, construction observation, inspection, and administrative services needed after the time specified above in Paragraph 3.02 for Substantial Completion (as duly adjusted pursuant to the Contract), until the Work is substantially complete. The total amount for special damages shall not exceed five percent (5%) of the Contract Price and all approved Contract Price modifications.

B. After Contractor achieves Substantial Completion, if Contractor shall neglect, refuse, or fail to complete the remaining Work within the Contract Times, Contractor shall reimburse Owner for the actual costs reasonably incurred by Owner for engineering, construction observation, inspection, and administrative services needed after the time specified above in Paragraph 3.02 for Work to be completed and ready for final payment (as duly adjusted pursuant to the Contract), until the Work is completed and ready for final payment.

C. The special damages imposed in this paragraph are supplemental to any liquidated damages for delayed completion established in this Agreement.

ARTICLE 4 – CONTRACT PRICE

4.01 *Owner shall pay Contractor for completion of the Work in accordance with the Contract Documents, the amounts that follow, subject to adjustment under the Contract:*

A. For all Work other than Unit Price Work, a lump sum of: $[amount] ([words] dollars).

All specific cash allowances are included in the above price in accordance with Paragraph 13.02 of the General Conditions.

B. For all Unit Price Work, an amount equal to the sum of the extended prices (established for each separately identified item of Unit Price Work by multiplying the unit price times the actual quantity of that item).

Unit Price Work					
Item No.	**Description**	**Unit**	**Estimated Quantity**	**Unit Price**	**Extended Price**
				$	$
				$	$
				$	$
				$	$
				$	$
Total of all Extended Prices for Unit Price Work (subject to final adjustment based on actual quantities)					$

This document is a MODIFIED version of EJCDC® C-520, Agreement Between Owner and Contractor for Construction Contract (Stipulated Price). Copyright © 2016 National Society of Professional Engineers, American Council of Engineering Companies, and American Society of Civil Engineers. All rights reserved.

The extended prices for Unit Price Work set forth as of the Effective Date of the Contract are based on estimated quantities. As provided in Paragraph 13.03 of the General Conditions, estimated quantities are not guaranteed, and determinations of actual quantities and classifications are to be made by Engineer.

C. Total of Lump Sum Amount and Unit Price Work (subject to final Unit Price adjustment): $[amount] ([words] dollars).

ARTICLE 5 – PAYMENT PROCEDURES

5.01 *Submittal and Processing of Payments*

A. Contractor shall submit Applications for Payment in accordance with Article 15 of the General Conditions. Owner and Engineer will process Applications for Payment as provided in the General Conditions.

5.02 *Progress Payments; Retainage*

A. Owner shall make progress payments on account of the Contract Price on the basis of Contractor's Applications for Payment monthly during performance of the Work as provided in Paragraph 5.02.A.1 below, provided that such Applications for Payment have been submitted in a timely manner, have been approved by the Engineer and otherwise meet the requirements of the Contract. All such payments will be measured by the Schedule of Values established as provided in the General Conditions (and in the case of Unit Price Work based on the number of units completed) or, in the event there is no Schedule of Values, as provided elsewhere in the Contract.

1. Prior to Substantial Completion, progress payments will be made in an amount equal to the percentage indicated below but, in each case, less the aggregate of payments previously made and less such amounts as Owner may withhold, including but not limited to liquidated damages, in accordance with the Contract.

a. 95 percent of Work completed (with the balance being retainage); and

b. 95 percent of cost of materials and equipment not incorporated in the Work but delivered, suitably stored, and accompanied by documentation satisfactory to Owner as provided in Paragraph 15.01.B of the General Conditions (with the balance being retainage).

B. Upon Substantial Completion, the retainage shall be further reduced below 5 percent to that amount necessary to assure completion as determined by the Owner. The determination of any such reduction shall be at the sole discretion of the Owner.

5.03 *Diversity Procurement*

A. The Contractor, Suppliers, and Subcontractors are encouraged to provide the participation of small, women-owned, minority-owned or service-disabled veteran-owned businesses in this Agreement. With each monthly Application for Payment, the Contractor shall document the following:

1. if the Contractor is designated by the Commonwealth of Virginia as a small, women-owned, minority-owned or service-disabled veteran-owned business, the designation type and the dollar value of Work completed by the Contractor;

2. dollar value of Work completed by Subcontractors designated by the Commonwealth of Virginia as small business;

This document is a MODIFIED version of EJCDC® C-520, Agreement Between Owner and Contractor for Construction Contract (Stipulated Price). Copyright © 2016 National Society of Professional Engineers, American Council of Engineering Companies, and American Society of Civil Engineers. All rights reserved.

3. dollar value of Work completed by Subcontractors designated by the Commonwealth of Virginia as women-owned business;

4. dollar value of Work completed by Subcontractors designated by the Commonwealth of Virginia as minority-owned business; and

5. dollar value of Work completed by Subcontractors designated by the Commonwealth of Virginia as service-disabled veteran-owned business.

B. As of July 1, 2023, the Contractor, Suppliers, and Subcontractors are encouraged to provide the participation of small, women-owned, and minority-owned (SWaM) businesses, service-disabled veteran-owned businesses (SDVOB), or disadvantaged business enterprises (DBE) in this Agreement. With each monthly Application for Payment, the Contractor shall document the following:

1. if the Contractor is designated by the Commonwealth of Virginia as SWaM, SDVOB, and/or DBE, the designation type and the dollar value of Work completed by the Contractor;

2. dollar value of Work completed by Suppliers and/or Subcontractors designated by the Commonwealth of Virginia as small businesses;

3. dollar value of Work completed by Suppliers and/or Subcontractors designated by the Commonwealth of Virginia as women-owned businesses;

4. dollar value of Work completed by Suppliers and/or Subcontractors designated by the Commonwealth of Virginia as minority-owned businesses;

5. dollar value of Work completed by Suppliers and/or Subcontractors designated by the Commonwealth of Virginia as SDVOB; and

6. dollar value of Work completed by Suppliers and/or Subcontractors designated by the Commonwealth of Virginia as DBE.

C. [OPTIONAL] Virginia Clean Water Revolving Loan Fund (VCWRLF) Program Requirements

1. Contractor shall demonstrate compliance with minority business and women business enterprise (MBE/WBE) requirements and take reasonable affirmative steps to subcontract with MBE/WBE firms whenever additional subcontracting opportunities arise during the performance of the Agreement.

2. Contractor shall submit Part I and Part II – MBE/WBE Utilization Reporting (Attachment #3 of the VCWRLF 2016 Contract Inserts) quarterly to the Department of Environmental Quality as directed by the Owner.

D. [OPTIONAL] Water Infrastructure Finance and Innovation Act (WIFA) Program Requirements

1. Contractor's compliance with Executive Order 11246 (Notice of Requirement for Affirmative Action to Ensure Equal Employment Opportunity) and the regulations in 41 CFR part 60-4 shall be based on its implementation of the Equal Opportunity Clause, specific affirmative action obligations required by the specifications set forth in 41 CFR 60-40.3(a), and its efforts to meet the goals.

5.04 *Subcontractor Payments*

A. Within 7 calendar days of each payment by Owner to Contractor under this Agreement, Contractor shall either: (1) pay the Subcontractor for the proportionate share of the total payment received, attributable to the Work performed by the Subcontractor; or (2) notify

This document is a MODIFIED version of EJCDC® C-520, Agreement Between Owner and Contractor for Construction Contract (Stipulated Price). Copyright © 2016 National Society of Professional Engineers, American Council of Engineering Companies, and American Society of Civil Engineers. All rights reserved.

the Owner in writing of the intention to withhold all or part of the Subcontractor's payment with the reason for nonpayment.

B. Contractor shall pay interest to its Subcontractors on all amounts owed by the Contractor that remain unpaid 7 calendar days after receipt of the Contractor of payment from Owner for Work performed by the Subcontractor, except of amounts withheld as allowed above and unless otherwise provided under the terms of this Agreement. Unless otherwise provided under the terms of this Agreement, interest shall accrue at the rate of 1 percent per month.

C. Contractor shall include in each its subcontracts a provision requiring each Subcontractor to include or otherwise be subject to the same payment and interest requirements set forth in this paragraph. A contract modification or cost reimbursement claim shall not include any amounts for reimbursement of such interest charges.

5.05 *[OPTIONAL] Davis-Bacon Act Wage Determination*

A. Design-Builder shall submit the Davis-Bacon Payroll Certification (WH-347) (Attachment #5 of the VCWLRF 2016 Contract Inserts and Appendix F of the WIFIA Contract Inserts) weekly for the United States Department of Labor as directed by the Owner

5.06 *Final Payment*

A. Upon final completion and acceptance of the Work in accordance with Paragraph 15.06 of the General Conditions, Owner shall pay the remainder of the Contract Price as recommended by the Engineer as provided in Paragraph 15.06 of the General Conditions.

5.07 *Consent of Surety*

A. Owner may withhold final payment or return or release retainage at Substantial Completion or any other time, unless Contractor submits written consent of the surety to such payment, return or release.

ARTICLE 6 – REPRESENTATIONS, CERTIFICATIONS, AND STIPULATIONS

6.01 *Contractor's Representations*

A. Contractor makes the following representations for Owner's reliance:

1. Contractor has examined and carefully studied the Contract Documents, and any data and reference items identified in the Contract Documents.

2. Contractor has visited the Site, conducted a thorough, alert visual examination of the Site and adjacent areas, and become familiar with and is satisfied as to the general, local, and Site conditions that may affect cost, progress, and performance of the Work.

3. Contractor is familiar with and is satisfied as to all Laws and Regulations that may affect cost, progress, and performance of the Work.

4. Contractor has carefully studied all: (a) reports of explorations and tests of subsurface conditions at or adjacent to the Site, and all drawings of physical conditions relating to existing surface or subsurface structures at the Site, if any, that Owner has identified or made available to Contractor, especially with respect to Technical Data in such reports and drawings, and (b) reports and drawings relating to Hazardous Environmental Conditions, if any, at or adjacent to the Site, that Owner has identified or made available to Contractor, especially with respect to Technical Data in such reports and drawings.

5. Contractor has considered the information known to Contractor itself; information commonly known to contractors doing business in the locality of the Site; information

This document is a MODIFIED version of EJCDC® C-520, Agreement Between Owner and Contractor for Construction Contract (Stipulated Price). Copyright © 2016 National Society of Professional Engineers, American Council of Engineering Companies, and American Society of Civil Engineers. All rights reserved.

and observations obtained from visits to the Site; the Contract Documents; and the Site-related reports and drawings, if any, identified in the Contract Documents or otherwise made available to Contractor, with respect to the effect of such information, observations, and documents on (a) the cost, progress, and performance of the Work; (b) the means, methods, techniques, sequences, and procedures of construction to be employed by Contractor; and (c) Contractor's safety precautions and programs.

6. Based on the information and observations referred to in the preceding paragraph, Contractor agrees that no further examinations, investigations, explorations, tests, studies, or data are necessary prior to entry into the Contract at the Contract Price, subject to the Contract Times.

7. Contractor is aware of the general nature of work to be performed by Owner and others at the Site that relates to the Work as indicated in the Contract Documents.

8. Contractor has submitted online discussions through HRSD's Online Oracle Enterprise Resource Planning (ERP) system as written notice of all conflicts, errors, ambiguities, or discrepancies that Contractor has discovered in the Contract Documents, and the written response from Owner is acceptable to Contractor.

9. The Contract Documents are generally sufficient to indicate and convey understanding of all terms and conditions for performance and furnishing of the Work.

10. Contractor's entry into this Contract constitutes an incontrovertible representation by Contractor that without exception all prices in the Agreement are premised upon performing and furnishing the Work required by the Contract Documents.

11. Contractor is organized or authorized to transact business in the Commonwealth of Virginia in accordance with Title 13.1 and/or Title 50 of the Code of Virginia. Contractor shall not allow its existence to lapse or its certificate of authority or registration to transact business in the Commonwealth of Virginia, if so, required under Title 13.1 and/or Title 50 of the Code of Virginia, to be revoked or cancelled at any time during the term of this Agreement. If the Contractor fails to remain in compliance with the provisions of this section, Owner reserves the right to cancel this Agreement.

12. Contractor does not, and shall not during the performance of the contract, knowingly employ an unauthorized alien as defined in the Federal Immigration Reform and Control Act of 1986, in accordance with §2.2-4311.1 of the Code of Virginia.

6.02 *Contractor's Certifications*

A. Contractor certifies that it has not engaged in corrupt, fraudulent, collusive, or coercive practices in competing for or in executing the Agreement. For the purposes of this Section:

1. "corrupt practice" means the offering, giving, receiving, or soliciting of anything of value likely to influence the action of a public official in the bidding process or in the Agreement's execution;

2. "fraudulent practice" means an intentional misrepresentation of facts made (a) to influence the bidding process or in the Agreement execution to the detriment of Owner, (b) to establish Bid or Contract prices at artificial non-competitive levels, or (c) to deprive Owner of the benefits of free and open competition;

This document is a MODIFIED version of EJCDC® C-520, Agreement Between Owner and Contractor for Construction Contract (Stipulated Price). Copyright © 2016 National Society of Professional Engineers, American Council of Engineering Companies, and American Society of Civil Engineers. All rights reserved.

3. "collusive practice" means a scheme or arrangement between 2 or more Bidders, with or without the knowledge of Owner, a purpose of which is to establish Bid or Contract prices at artificial, non-competitive levels; and

4. "coercive practice" means harming or threatening to harm, directly or indirectly, persons or their property to influence their participation in the bidding process or in the Agreement's execution.

6.03 *Anti-Discrimination Requirements*

A. For all contracts over $10,000 the Contractor shall not discriminate against any employee or applicant for employment because of race, religion, color, sex, national origin, age, disability or other basis prohibited by state law relating to discrimination in employment. During the performance of this Agreement, the Contractor shall:

1. post in conspicuous places, available to employees and applicants for employment, notices setting forth the provisions of this nondiscrimination clause,

2. in all solicitations or advertisements for employees placed by or on behalf of the Contractor, will state that such Contractor is an equal opportunity employer. Notices, advertisements and solicitations placed in accordance with federal law, rule or regulation shall be deemed sufficient for the purpose of meeting the requirements of this section, and

3. include the provisions of the foregoing clauses in every construction subcontract or purchase order over $10,000, so that the provisions will be binding upon each construction subcontractor or vendor, all in accordance with §2.2-4311 of the Code of Virginia.

B. Further, in accordance with §2.2-4343.1 of the Code of Virginia, the Contractor shall not discriminate against a faith-based organization on the basis of the organization's religious character or impose conditions that restrict the religious character of the faith-based organization, except in accord with §2.2-4343.1.F of the Code of Virginia, that no funds shall be expended on contracts for religious worship, instruction, or proselytizing, or impair, diminish, or discourage the exercise of religious freedom by the recipients of such goods, services, or disbursements.

C. In accordance with the Virginia Human Rights Act §2.2-3900 of the Code of Virginia, the Firm shall safeguard all individuals within the Commonwealth from unlawful discrimination in employment because of race, color, religion, national origin, sex, pregnancy, childbirth or related medical conditions, age, marital status, sexual orientation, gender identity, disability, or status as a veteran; preserve the public safety, health, and general welfare; further the interests, rights, and privileges of individuals within the Commonwealth; and protect citizens of the Commonwealth against unfounded charges of unlawful discrimination.

6.04 *Drug Free Workplace Requirements*

A. For all contracts over $10,000 the Contractor shall maintain a drug-free workplace. During the performance of this Agreement, the Contractor shall:

1. provide a drug-free workplace for the Contractor's employees,

2. post in conspicuous places, available to employees and applicants for employment, a statement notifying employees that the unlawful manufacture, sale, distribution, dispensation, possession, or use of a controlled substance or marijuana is prohibited in

This document is a MODIFIED version of EJCDC® C-520, Agreement Between Owner and Contractor for Construction Contract (Stipulated Price). Copyright © 2016 National Society of Professional Engineers, American Council of Engineering Companies, and American Society of Civil Engineers. All rights reserved.

the Contractor's workplace and specifying the actions that will be taken against employees for violations of such prohibition,

3. state in all solicitations or advertisements for employees placed by or on behalf of the Contractor that the Contractor maintains a drug-free workplace, and

4. include the provisions of the foregoing clauses in every subcontract or purchase order over $10,000, so that the provisions will be binding upon each subcontractor or vendor, all in accordance with §2.2-4312 of the Code of Virginia.

ARTICLE 7 – CONTRACT DOCUMENTS

7.01 *Contents*

A. The Contract Documents consist of the following:

1. This Agreement (inclusive).

2. [OPTIONAL] VCWRLF 2016 Contract Inserts (inclusive; not attached but incorporated by reference).

3. [OPTIONAL] WIFIA Contract Inserts (inclusive; not attached but incorporated by reference).

4. General Conditions (inclusive; not attached but incorporated by reference).

5. Supplementary Conditions (inclusive; not attached but incorporated by reference).

6. Technical Specifications including Appendices, if any, (inclusive; not attached but incorporated by reference).

7. Drawings (inclusive; not attached but incorporated by reference) with each sheet bearing the following general title: [tile of Drawings]. **[OR]** Drawings listed on the attached sheet index.

8. Addenda (numbers 1 to [#], inclusive; not attached but incorporated by reference).

9. Exhibits to this Agreement (enumerated as follows):

   a. Contractor's Bid submitted in HRSD's Online Oracle ERP system (Solicitation [#]: Response [#]; not attached but incorporated by reference).

10. The following will be delivered or issued after the Effective Date of this Agreement and are not attached hereto:

    a. Notice to Proceed.

    b. Performance Bond (together with power of attorney).

    c. Payment Bond (together with power of attorney).

    d. Insurance Certificates.

    e. [OPTIONAL] Escrow Agreement (if applicable).

    f. Work Change Directives (if applicable).

    g. Change Orders (if applicable).

    h. Warranty Bond (if applicable).

11. **[OPTIONAL]** Other Exhibits to this Agreement (enumerated as follows):

This document is a MODIFIED version of EJCDC® C-520, Agreement Between Owner and Contractor for Construction Contract (Stipulated Price). Copyright © 2016 National Society of Professional Engineers, American Council of Engineering Companies, and American Society of Civil Engineers. All rights reserved.

a. [OPTIONAL:P-520 Agreement] Procurement Documents for the [Update Project Name].

b. [List].

B. The Contract Documents listed in Paragraph 7.01.A are attached to this Agreement (except as expressly noted otherwise above).

C. There are no Contract Documents other than those listed above in this Article 7.

D. The Contract Documents may only be amended, modified, or supplemented as provided in the General Conditions.

ARTICLE 8 – MISCELLANEOUS

8.01 *Terms:* Terms used in this Agreement will have the meanings stated in the General Conditions and Supplementary Conditions.

8.02 *Assignment of Agreement:* Unless expressly agreed to elsewhere in the Agreement, no assignment by a party hereto of any rights under or interests in the Agreement will be binding on the other party hereto without the written consent of the party sought to be bound; and, specifically but without limitation, money that may become due and money that is due may not be assigned without such consent (except to the extent that the effect of this restriction may be limited by law), and unless specifically stated to the contrary in any written consent to an assignment, no assignment will release or discharge the assignor from any duty or responsibility under the Agreement.

8.03 *Successors and Assigns:* Owner and Contractor each binds itself, its successors, assigns, and legal representatives to the other party hereto, and its successors, assigns, and legal representatives, in respect to all covenants, agreements, and obligations contained in the Agreement.

8.04 *Severability:* Any provision or part of the Agreement held to be void or unenforceable under any applicable law or regulation shall be deemed stricken, and all remaining provisions shall continue to be valid and binding upon Owner and Contractor, who agree that the Agreement shall be reformed to replace such stricken provision or part thereof with a valid and enforceable provision that comes as close as possible to expressing the intention of the stricken provision.

8.05 *Permission to Use HRSD Name and Social Media Release:* The Contractor or any of its employees or agents shall not use HRSD's name, logo, proprietary information, or site photographs in any format for any personal or professional marketing or public relations material or social media use without prior review and approval from HRSD. These materials include, but are not limited to, advertisements, news releases, published articles, customer lists, social media posts, advertorials or any other promotional purposes. HRSD's Director of Communications shall be provided with any material to be shared with the public at least 7 business calendar days prior to the planned release of the information.

This Agreement will be effective on [date] (which is the Effective Date of the Construction Contract).

The Agreement and all subsequent changes to the Agreement will be approved and executed using HRSD's Enterprise Project Management (Unifier) system. Physical signatures (on the Agreement and future change orders) will not be required if acknowledged by Contractor through the online system.

This document is a MODIFIED version of EJCDC® C-520, Agreement Between Owner and Contractor for Construction Contract (Stipulated Price). Copyright © 2016 National Society of Professional Engineers, American Council of Engineering Companies, and American Society of Civil Engineers. All rights reserved.

PERFORMANCE BOND

BOND NO._____

AMOUNT: $«Contract_Value»

KNOW ALL MEN BY THESE PRESENTS, that «Contractor» of «Address_Line_1», «Address_Line_2», hereinafter called the Contractor (Principal), and «Surety», a corporation duly organized and existing under and by virtue of the laws of the State of «Surety_State», hereinafter called the Surety, and authorized to transact business within the Commonwealth of Virginia, as Surety, are held and firmly bound unto Hampton Roads Sanitation District (HRSD) as Owner (Obligee), in the sum of «Value_words» Dollars ($«Contract_Value») for payment of which, well and truly be made to the Owner, the Contractor and the Surety bind themselves and each of their heirs, executors, administrators, successors, and assigns, jointly and severally, firmly by these presents as follows:

THE CONDITION OF THE ABOVE OBLIGATION IS SUCH THAT:

WHEREAS, the Contractor has executed and entered into a certain Contract hereto attached, with the Owner, dated «Contract_Date» for [PROJECT NAME].

NOW, THEREFORE, if the Contractor shall at all times duly, promptly, and faithfully perform the Contract and any alteration in or addition to the obligations of the Contractor arising thereunder, including the matter of infringement, if any, of patents or other proprietary rights, and shall assure all guarantees against defective workmanship and materials, including the guarantee period following final completion by the Contractor and final acceptance by the Owner and comply with all the covenants therein contained in the Specifications, Drawings, and other Documents constituting a part of the Contract required to be performed by the Contractor, in the manner and within the times provided in the Contract, and shall fully indemnify and save harmless the Owner from all costs and damage which it may suffer by reason or failure so to do, and shall fully reimburse and repay it all outlay and expenses which it may incur in making good any default, and reasonable counsel fees incurred in the prosecution of or defense of any action arising out of or in connection with any such default, then this obligation shall be void; otherwise to remain in full force and effect.

PROVIDED, HOWEVER, that the Surety, for value received, hereby stipulates and agrees that no change, extension of time, alteration, or addition to the terms of the Contract Documents or to the work to be performed thereunder, shall in any way affect its obligation on this bond, and it does hereby waive notice of any such change, extension of time, alteration, or addition to the terms of the Contract Documents.

PROVIDED, FURTHER, that no final settlement between the Owner and the Contractor shall abridge the right of any beneficiary hereunder, whose claim may be unsatisfied.

IN WITNESS WHEREOF, the above parties bounded together have executed this instrument this ____ day of _____, 20___, the name and corporate seal of each corporate party being hereto affixed and those presents duly signed by its undersigned representative, pursuant to authority of its governing body.

By signing your name electronically below, you are agreeing that your electronic signature is the legal equivalent of your physical signature on this form. A paper copy of this form is not required at this time. Owner reserves the right to ask for a paper copy of this form at a later date.

«CONTRACTOR»

_____

By_____
(Seal)

_____

Attest

«SURETY»

_____

By_____
(Seal)

_____

Attest

NOTE: Date of bond must not be prior to date of Contract. If Contractor is a partnership, all partners should execute bond.

IMPORTANT: The Surety named on this bond shall be one who is licensed to conduct business in the state where the project is located, and named in the current list of Companies Holding Certificates of Authority as Acceptable Sureties on Federal Bonds and as Acceptable Reinsuring Companies, as published in Circular 570 (amended) by the Audit Staff Bureau of Accounts, U.S. Treasury Department. All bonds signed by an agent must be accompanied by a certified copy of the authority to act for the Surety at the time of the signing of this bond.

PAYMENT BOND

BOND NO._____

AMOUNT: «Contract_Value»

KNOW ALL MEN BY THESE PRESENTS, that «Contractor» of «Address_Line_1», «Address_Line_2», hereinafter called the Contractor (Principal), and «Surety», a corporation duly organized and existing under and by virtue of the laws of the State of «Surety_State», hereinafter called the Surety, and authorized to transact business within the Commonwealth of Virginia, as Surety, are held and firmly bound unto Hampton Roads Sanitation District (HRSD) as Owner (Obligee), in the sum of «Value_words» Dollars ($«Contract_Value») for payment of which, well and truly be made to the Owner, the Contractor and the Surety bind themselves and each of their heirs, executors, administrators, successors, and assigns, jointly and severally, firmly by these presents as follows:

THE CONDITION OF THE ABOVE OBLIGATION IS SUCH THAT:

WHEREAS, the Contractor has executed and entered into a certain Contract hereto attached, with the Owner, dated «Contract_Date» for [PROJECT NAME].

NOW, THEREFORE, if the Contractor shall promptly make payment to all persons, firms, subcontractors, and corporations furnishing materials for or performing labor in the prosecution of the work provided for in the Contract, and any authorized extension or modification thereof, including but not limited to, all amounts due for materials, lubricants, oil, gasoline, repairs on machinery, equipment, and tools consumed or used in connection with the construction of the work, and all insurance premiums on the work, and for all labor performed in the work, whether by subcontractor or otherwise, then this obligation shall be void; otherwise to remain in full force and effect.

PROVIDED, FURTHER, that the Surety, for value received hereby stipulates and agrees that no change, extension of time, alteration, or addition to the terms of the Contract, or to work to be performed thereunder, or the Specifications accompanying the same, shall in any way affect its obligation on this bond, and it does hereby waive notice of any such change, extension of time, alteration, or addition to the terms of the Contract, or to the work, or to the Specifications.

PROVIDED, FURTHER, that no final settlement between the Owner and the Contractor shall abridge the right of any beneficiary hereunder, whose claim may be unsatisfied.

IN WITNESS WHEREOF, the above parties bounded together have executed this instrument this ____ day of _____, 20___, the name and corporate seal of each corporate party being hereto affixed and those presents duly signed by its undersigned representative, pursuant to authority of its governing body.

By signing your name electronically below, you are agreeing that your electronic signature is the legal equivalent of your physical signature on this form. A paper copy of this form is not required at this time. Owner reserves the right to ask for a paper copy of this form at a late date.

«CONTRACTOR»

_____

By_____
(Seal)

_____

Attest

«SURETY»

_____

By_____

(Seal)

_____

Attest

NOTE: Date of bond must not be prior to date of Contract. If Contractor is a partnership, all partners should execute bond.

IMPORTANT: The Surety named on this bond shall be one who is licensed to conduct business in the Commonwealth of Virginia, and named in the current list of Companies Holding Certificates of Authority as Acceptable Sureties on Federal Bonds and as Acceptable Reinsuring Companies, as published in Circular 570 (amended) by the Audit Staff Bureau of Accounts, U.S. Treasury Department. All bonds signed by an agent must be accompanied by a certified copy of the authority to act for the Surety at the time of the signing of this bond.

WARRANTY BOND

Contractor	**Surety**
Name: «Contractor» Address *(principal place of business)*: «Address_Line_1» «Address_Line_2»	Name: «Surety» Address *(principal place of business)*: [Address 1] [Address 2]
Owner Name: Hampton Roads Sanitation District Address *(principal place of business)*: 1434 Air Rail Avenue Virginia Beach, Virginia 23455	**Construction Contract** Description *(name and location)*: [Project Name] City of [City], Virginia Contract Price: «Contract_Value» Effective Date of Contract: «Contract_Date» Contract's Date of Substantial Completion: [Date]
Bond Bond Amount: _____ Date of Bond: _____ Modifications to this Bond form: ☐ None ☐ See Paragraph 9	Bond Period: Commencing 364 calendar days after Substantial Completion of the Work under the Construction Contract, and continuing until **[insert number of years, typically either two or three]** years after such Substantial Completion.

*Surety and Contractor, intending to be legally bound hereby, subject to the terms set forth herein, do each cause this Warranty Bond to be duly executed by an authorized officer, agent, or representative.

Contractor as Principal	Surety
«Contractor»	«Surety»
(Full formal name of Contractor)	*(Full formal name of Surety) (corporate seal)*
By: _____	By: _____
(Signature)	*(Signature) (Attach Power of Attorney)*
Name: _____	Name: _____
(Printed or typed)	*(Printed or typed)*
Title: _____	Title: _____
Attest: _____	Attest: _____
(Signature)	*(Signature)*
Name: _____	Name: _____
(Printed or typed)	*(Printed or typed)*
Title:	Title:

Notes: (1) Provide supplemental execution by any additional parties, such as joint venturers. (2) Any singular reference to Contractor, Surety, Owner, or other party is considered plural where applicable.

*By signing your name electronically, you are agreeing that your electronic signature is the legal equivalent of your physical signature on this form. A paper copy of this form is not required at this time. Owner reserves the right to ask for a paper copy of this form at a later date.

Copyright© 2018 National Society of Professional Engineers, American Council of Engineering Companies, and American Society of Civil Engineers. All rights reserved

1. The Contractor and Surety, jointly and severally, bind themselves, their heirs, executors, administrators, successors, and assigns to the Owner for the performance of the Construction Contract's Correction Period Obligations. The Construction Contract is incorporated herein by reference.
2. If the Contractor performs the Correction Period Obligations, the Surety and the Contractor shall have no obligation under this Warranty Bond.
3. If Owner gives written notice to Contractor and Surety during the Bond Period of Contractor's obligation under the Correction Period Obligations, and Contractor does not fulfill such obligation, then Surety shall be responsible for fulfillment of such Correction Period Obligations. Surety shall either fulfill the Correction Period Obligations itself, through its agents or contractors, or, in the alternative, Surety may waive the right to fulfill the Correction Period Obligations itself, and reimburse the Owner for all resulting costs incurred by Owner in performing Contractor's Correction Period Obligations, including but not limited to correction, removal, replacement, and repair costs.
4. The Surety's liability is limited to the amount of this Warranty Bond. Renewal or continuation of the Warranty Bond will not modify such amount, unless expressly agreed to by Surety in writing.
5. The Surety shall have no liability under this Warranty Bond for obligations of the Contractor that are unrelated to the Construction Contract. No right of action will accrue on this Warranty Bond to any person or entity other than the Owner or its heirs, executors, administrators, successors, and assigns.
6. Any proceeding, legal or equitable, under this Warranty Bond may be instituted in any court of competent jurisdiction in the location in which the Work or part of the Work is located and must be instituted within two years after the Surety refuses or fails to perform its obligations under this Warranty Bond.
7. Written notice to the Surety, the Owner, or the Contractor must be mailed or delivered to the address shown in this Warranty Bond.
8. Definitions

    8.1. *Construction Contract*—The agreement between the Owner and Contractor identified on the cover page of this Warranty Bond, including all Contract Documents and changes made to the agreement and the Contract Documents.

    8.2. *Contract Documents*—All the documents that comprise the agreement between the Owner and Contractor.

    8.3. *Correction Period Obligations*—The duties, responsibilities, commitments, and obligations of the Contractor with respect to correction or replacement of defective Work, as set forth in the Construction Contract's Correction Period clause, EJCDC® C-700, Standard General Conditions of the Construction Contract (2018), Paragraph 15.08, as duly modified.

    8.4. *Substantial Completion*—As defined in the Construction Contract.

    8.5. *Work*—As defined in the Construction Contract.
9. Modifications to this Bond are as follows: **[Describe modification or enter "None"]**

Copyright© 2018 National Society of Professional Engineers, American Council of Engineering Companies, and American Society of Civil Engineers. All rights reserved

ESCROW AGREEMENT

THIS ESCROW AGREEMENT, made and entered into this ___ day of _____, 20__, by, between and among Hampton Roads Sanitation District (HRSD) and «Contractor» (Contractor), _____ (Bank), a trust company, bank, or savings and loan institution with its principal office located in the Commonwealth and «Surety» (Surety), provides:

I.

HRSD and the Contractor have entered into an agreement with respect to HRSD Agreement titled [PROJECT NAME] (Agreement). This Escrow Agreement is pursuant to, but in no way amends or modifies the contract. Payments made hereunder or the release of funds from escrow shall not be deemed approval or acceptance of performance by the Contractor.

II.

In order to assure full and satisfactory performance by the Contractor of its obligations under the agreement, HRSD is entitled to retain certain amounts otherwise due the Contractor, known as retainage. The Contractor has, with the approval of HRSD, elected to have such retainage held in escrow by the Bank. This document sets forth the terms of the escrow. The Bank shall not be deemed a party to, bound by, or required to inquire into the terms of the agreement or any other instrument or agreement between HRSD and the Contractor.

III.

HRSD shall from time to time pursuant to its contract pay to the Bank amounts retained by it under the agreement. Except as to amounts actually withdrawn from escrow by HRSD, the Contractor shall look solely to the Bank for the payment of funds retained under the agreement and paid by HRSD to the Bank.

The risk of loss by diminution of the principal of any funds invested under the terms of this Escrow Agreement shall be solely upon the Contractor.

Funds and securities held by the Bank pursuant to this Escrow Agreement shall not be subject to levy, garnishment, attachment, lien or other process whatsoever. Contractor agrees not to assign, pledge, discount, sell or otherwise transfer or dispose of his interest in the escrow account or any part thereof, except to the Surety.

IV.

Upon receipt of checks or warrants drawn by HRSD and made payable to it as escrow agent, the Bank shall promptly notify the Contractor, negotiate the same and deposit or invest and reinvest the proceeds in approved securities in accordance with the written instructions of the Contractor. In no event shall the Bank invest the escrow funds in any security not approved.

V.

The following securities, and none other, are approved securities for all purposes of this Escrow Agreement:

1. United States Treasury Bonds, United States Treasury Notes, United States Treasury Certificates

of Indebtedness or United States Treasury Bills.

2. Bonds, notes and other evidences of indebtedness unconditionally guaranteed as to the payment of principal and interest by the United States.

3. Bonds or notes of the Commonwealth of Virginia.

4. Bonds of any political subdivision of the Commonwealth of Virginia, if such bonds carried, at the time of purchase by the Bank or deposit by the Contractor, a Standard and Poor's or Moody's Investors Service rating of at least "A".

5. Certificates of deposit or other financial accounts issued or held by commercial banks located within the Commonwealth, including, but not limited to, those insured by the Bank and its affiliates.

6. Any bonds, notes, or other evidences of indebtedness listed in Paragraphs 1 through 3 may be purchased pursuant to a repurchase agreement with a bank, within or without the Commonwealth of Virginia having a combined capital, surplus and undivided profit of not less than $25,000,000, provided the obligation of the Bank to repurchase is within the time limitations established for investments as set forth herein. The repurchase agreement shall be considered a purchase of such securities even if title, and/or possession of such securities is not transferred to the Escrow Agent, so long as the repurchase obligation of the bank is collateralized by the securities themselves, and the securities have on the date of the repurchase agreement a fair market value equal to at least 100% of the amount of the repurchase obligation of the Bank and the securities are held by a third party, and segregated from other securities owned by the Bank.

No security is approved hereunder which matures more than five years after the date of its purchase by the Bank or deposit by the Contractor.

VI.

The Contractor may from time to time withdraw the whole or any portion of the escrowed funds by depositing with the Bank approved securities in an amount equal to, or in excess of, the amount so withdrawn. Any securities so deposited or withdrawn shall be valued at such time of deposit or withdrawal at the lower par or market value, the latter as determined by the Bank. Any securities so deposited shall thereupon become a part of the escrowed fund.

Upon receipt of a direction signed by the HRSD General Manager, Director of Finance or Chief of Accounting & Finance, the Bank shall pay the principal of the fund, or any specified amount thereof, to HRSD. Such payment shall be made as soon as is practicable after receipt of the direction.

Upon receipt of a direction signed by either the General Manager, Director of Finance or Chief of Accounting & Finance on behalf of HRSD, the Bank shall pay and deliver the principal of the fund, or any specified portion thereof, to the Contractor, in cash or in kind, as may be specified by the Contractor. Such payment and delivery shall be made as soon as is practicable after receipt of the direction.

VII.

For its services hereunder the Bank shall be entitled to a reasonable fee in accordance with its published schedule of fees or as may be agreed upon by the Bank and the Contractor. Such fee and any other costs of administration of this Agreement shall be paid from the income earned upon the escrow fund

and, if such income is not sufficient to pay the same, by the Contractor.

Under no circumstances shall HRSD be responsible to the Bank for any fee or costs of administering this agreement, account, or escrow fund.

VIII.

The net income earned and received upon the principal of the escrow fund shall be paid over to the Contractor in quarterly or more frequent installments. Until so paid or applied to pay the Bank's fee or any other costs of administration such income shall be deemed a part of the principal of the fund. All income earned shall be reported by the Bank to the Internal Revenue Service and other taxing authorities on the Contractor's Tax Identification Number.

IX.

The Surety undertakes no obligation hereby but joins in the Agreement for the sole purpose of acknowledging that its obligations as surety for the Contractor's performance of the contract are not affected hereby.

WITNESS the following signatures, all as of the day and year first above written.

By signing your name electronically below, you are agreeing that your electronic signature is the legal equivalent of your physical signature on this form. A paper copy of this form is not required at this time. Owner reserves the right to ask for a paper copy of this form at a late date.

HAMPTON ROADS SANITATION DISTRICT

By_____

Director of Finance or Chief of Accounting & Finance

«Contractor»

_____

Contractor's Tax Identification Number or
Social Security Number

By_____

Officer, Partner or Owner

BANK:

_____

Mailing Address to which Payments are to be Mailed

_____

Account Number

By_____

President or Vice President

«Surety»

By_____

Attorney-in-Fact

CONDITIONS OF THE CONTRACT

STANDARD GENERAL CONDITIONS OF THE CONSTRUCTION CONTRACT

TABLE OF CONTENTS

Page

Article 1—Definitions and Terminology 1

1.01 Defined Terms 1

1.02 Terminology 5

Article 2—Preliminary Matters 7

2.01 Delivery of Performance and Payment Bonds; Evidence of Insurance 7

2.02 Copies of Documents 7

2.03 Before Starting Construction 7

2.04 Preconstruction Conference; Designation of Authorized Representatives 7

2.05 Acceptance of Schedules 8

2.06 Electronic Transmittals 8

Article 3—Contract Documents: Intent, Requirements, Reuse 8

3.01 Intent 8

3.02 Reference Standards 9

3.03 Reporting and Resolving Discrepancies 9

3.04 Requirements of the Contract Documents 10

3.05 Reuse of Documents 10

Article 4—Commencement and Progress of the Work 11

4.01 Commencement of Contract Times; Notice to Proceed 11

4.02 Starting the Work 11

4.03 Reference Points 11

4.04 Progress Schedule 11

4.05 Delays in Contractor's Progress 12

Article 5—Site; Subsurface and Physical Conditions; Hazardous Environmental Conditions 13

5.01 Availability of Lands 13

5.02 Use of Site and Other Areas 13

5.03 Subsurface and Physical Conditions 14

5.04 Differing Subsurface or Physical Conditions 15

5.05 Underground Facilities 17

This document is a MODIFIED version of EJCDC® C-700, Standard General Conditions of the Construction Contract. Copyright© 2018 National Society of Professional Engineers, American Council of Engineering Companies, and American Society of Civil Engineers. All rights reserved.

5.06 Hazardous Environmental Conditions at Site 18
Article 6—Bonds and Insurance 20
6.01 Performance, Payment, and Other Bonds 20
6.02 Insurance—General Provisions 21
6.03 Contractor's Insurance 23
6.04 Builder's Risk and Other Property Insurance 24
6.05 Property Losses; Subrogation 24
6.06 Receipt and Application of Property Insurance Proceeds 26
Article 7—Contractor's Responsibilities 26
7.01 Contractor's Means and Methods of Construction 26
7.02 Supervision and Superintendence 26
7.03 Labor; Working Hours 26
7.04 Services, Materials, and Equipment 27
7.05 "Or Equals" 27
7.06 Substitutes 28
7.07 Concerning Subcontractors and Suppliers 30
7.08 Patent Fees and Royalties 31
7.09 Permits 31
7.10 Taxes 32
7.11 Laws and Regulations 32
7.12 Record Documents 32
7.13 Safety and Protection 32
7.14 Hazard Communication Programs 33
7.15 Emergencies 34
7.16 Submittals 34
7.17 Contractor's General Warranty and Guarantee 36
7.18 Indemnification 37
7.19 Delegation of Professional Design Services 38
Article 8—Other Work at the Site 39
8.01 Other Work 39
8.02 Coordination 39
8.03 Legal Relationships 40
Article 9—Owner's Responsibilities 41
9.01 Communications to Contractor 41

This document is a MODIFIED version of EJCDC® C-700, Standard General Conditions of the Construction Contract. Copyright© 2018 National Society of Professional Engineers, American Council of Engineering Companies, and American Society of Civil Engineers. All rights reserved.

9.02 Replacement of Engineer 41
9.03 Furnish Data 41
9.04 Pay When Due 41
9.05 Lands and Easements; Reports, Tests, and Drawings 41
9.06 Insurance 41
9.07 Change Orders 41
9.08 Inspections, Tests, and Approvals 41
9.09 Limitations on Owner's Responsibilities 41
9.10 Undisclosed Hazardous Environmental Condition 42
9.11 Evidence of Financial Arrangements 42
9.12 Safety Programs 42
Article 10—Engineer's Status During Construction 42
10.01 Owner's Representative 42
10.02 Visits to Site 42
10.03 Resident Project Representative 42
10.04 Engineer's Authority 43
10.05 Determinations for Unit Price Work 43
10.06 Decisions on Requirements of Contract Documents and Acceptability of Work 43
10.07 Limitations on Engineer's Authority and Responsibilities 43
10.08 Compliance with Safety Program 44
Article 11—Changes to the Contract 44
11.01 Amending and Supplementing the Contract 44
11.02 Change Orders 44
11.03 Work Change Directives 45
11.04 Field Orders 45
11.05 Owner-Authorized Changes in the Work 45
11.06 Unauthorized Changes in the Work 45
11.07 Change of Contract Price 46
11.08 Change of Contract Times 47
11.09 Change Proposals 47
11.10 Notification to Surety 48
Article 12—Claims 48
12.01 Claims 48
Article 13—Cost of the Work; Allowances; Unit Price Work 49

This document is a MODIFIED version of EJCDC® C-700, Standard General Conditions of the Construction Contract. Copyright© 2018 National Society of Professional Engineers, American Council of Engineering Companies, and American Society of Civil Engineers. All rights reserved.

13.01 Cost of the Work 49
13.02 Allowances 53
13.03 Unit Price Work 53
Article 14—Tests and Inspections; Correction, Removal, or Acceptance of Defective Work 54
14.01 Access to Work 54
14.02 Tests, Inspections, and Approvals 54
14.03 Defective Work 55
14.04 Acceptance of Defective Work 55
14.05 Uncovering Work 56
14.06 Owner May Stop the Work 56
14.07 Owner May Correct Defective Work 56
Article 15—Payments to Contractor; Set-Offs; Completion; Correction Period 57
15.01 Progress Payments 57
15.02 Contractor's Warranty of Title 60
15.03 Substantial Completion 60
15.04 Partial Use or Occupancy 61
15.05 Final Inspection 62
15.06 Final Payment 62
15.07 Waiver of Claims 63
15.08 Correction Period 63
Article 16—Suspension of Work and Termination 64
16.01 Owner May Suspend Work 64
16.02 Owner May Terminate for Cause 64
16.03 Owner May Terminate for Convenience 65
16.04 Contractor May Stop Work or Terminate 66
Article 17—Final Resolution of Disputes 66
17.01 Methods and Procedures 66
Article 18—Miscellaneous 66
18.01 Giving Notice 66
18.02 Computation of Times 67
18.03 Cumulative Remedies 67
18.04 Limitation of Damages 67
18.05 No Waiver 67
18.06 Survival of Obligations 67

This document is a MODIFIED version of EJCDC® C-700, Standard General Conditions of the Construction Contract. Copyright© 2018 National Society of Professional Engineers, American Council of Engineering Companies, and American Society of Civil Engineers. All rights reserved.

18.07 Controlling Law 67
18.08 Assignment of Contract 67
18.09 Successors and Assigns 68
18.10 Headings 68

This document is a MODIFIED version of EJCDC® C-700, Standard General Conditions of the Construction Contract. Copyright© 2018 National Society of Professional Engineers, American Council of Engineering Companies, and American Society of Civil Engineers. All rights reserved.

STANDARD GENERAL CONDITIONS OF THE CONSTRUCTION CONTRACT

ARTICLE 1—DEFINITIONS AND TERMINOLOGY

1.01 *Defined Terms*

A. Wherever used in the Bidding Requirements or Contract Documents, a term printed with initial capital letters, including the term's singular and plural forms, will have the meaning indicated in the definitions below. In addition to terms specifically defined, terms with initial capital letters in the Contract Documents include references to identified articles and paragraphs, and the titles of other documents or forms.

1. *Addenda*—Written or graphic instruments issued prior to the opening of Bids which clarify, correct, or change the Bidding Requirements or the proposed Contract Documents.

2. *Agreement*—The written instrument, executed by Owner and Contractor, that sets forth the Contract Price and Contract Times, identifies the parties and the Engineer, and designates the specific items that are Contract Documents.

3. *Application for Payment*—The document prepared by Contractor, in a form acceptable to Engineer, to request progress or final payments, and which is to be accompanied by such supporting documentation as is required by the Contract Documents.

4. *Bid*—The offer of a Bidder submitted on the prescribed form setting forth the prices for the Work to be performed.

5. *Bidder*—An individual or entity that submits a Bid to Owner.

6. *Bidding Documents*—The Bidding Requirements, the proposed Contract Documents, and all Addenda.

7. *Bidding Requirements*—The Advertisement or invitation to bid, Instructions to Bidders, Bid Bond or other Bid security, if any, the Bid Form, and the Bid with any attachments.

8. *Change Order*—A document which is signed by Contractor and Owner and authorizes an addition, deletion, or revision in the Work or an adjustment in the Contract Price or the Contract Times, or other revision to the Contract, issued on or after the Effective Date of the Contract.

9. *Change Proposal*—A written request by Contractor, duly submitted in compliance with the procedural requirements set forth herein, seeking an adjustment in Contract Price or Contract Times; contesting an initial decision by Engineer concerning the requirements of the Contract Documents or the acceptability of Work under the Contract Documents; challenging a set-off against payments due; or seeking other relief with respect to the terms of the Contract.

10. *Claim*

a. A demand or assertion by Owner directly to Contractor, duly submitted in compliance with the procedural requirements set forth herein, seeking an adjustment of Contract Price or Contract Times; contesting an initial decision by Engineer concerning the requirements of the Contract Documents or the acceptability of Work under the

This document is a MODIFIED version of EJCDC® C-700, Standard General Conditions of the Construction Contract. Copyright© 2018 National Society of Professional Engineers, American Council of Engineering Companies, and American Society of Civil Engineers. All rights reserved.

Contract Documents; contesting Engineer's decision regarding a Change Proposal; seeking resolution of a contractual issue that Engineer has declined to address; or seeking other relief with respect to the terms of the Contract.

b. A demand or assertion by Contractor directly to Owner, duly submitted in compliance with the procedural requirements set forth herein, contesting Engineer's decision regarding a Change Proposal, or seeking resolution of a contractual issue that Engineer has declined to address.

c. A demand or assertion by Owner or Contractor, duly submitted in compliance with the procedural requirements set forth herein, made pursuant to Paragraph 12.01.A.4, concerning disputes arising after Engineer has issued a recommendation of final payment.

d. A demand for money or services by a third party is not a Claim.

11. *Constituent of Concern*—Asbestos, petroleum, radioactive materials, polychlorinated biphenyls (PCBs), lead-based paint (as defined by the HUD/EPA standard), hazardous waste, and any substance, product, waste, or other material of any nature whatsoever that is or becomes listed, regulated, or addressed pursuant to Laws and Regulations regulating, relating to, or imposing liability or standards of conduct concerning, any hazardous, toxic, or dangerous waste, substance, or material.

12. *Contract*—The entire and integrated written contract between Owner and Contractor concerning the Work.

13. *Contract Documents*—Those items so designated in the Agreement, and which together comprise the Contract.

14. *Contract Price*—The money that Owner has agreed to pay Contractor for completion of the Work in accordance with the Contract Documents.

15. *Contract Times*—The number of days or the dates by which Contractor shall: (a) achieve Milestones, if any; (b) achieve Substantial Completion; and (c) complete the Work.

16. *Contractor*—The individual or entity with which Owner has contracted for performance of the Work.

17. *Cost of the Work*—See Paragraph 13.01 for definition.

18. *Drawings*—The part of the Contract that graphically shows the scope, extent, and character of the Work to be performed by Contractor.

19. *Effective Date of the Contract*—The date, indicated in the Agreement, on which the Contract becomes effective.

20. *Electronic Document*—Any Project-related correspondence, attachments to correspondence, data, documents, drawings, information, or graphics, including but not limited to Shop Drawings and other Submittals, that are in an electronic or digital format.

21. *Electronic Means*—Electronic mail (email), upload/download from a secure Project website, or other communications methods that allow: (a) the transmission or communication of Electronic Documents; (b) the documentation of transmissions, including sending and receipt; (c) printing of the transmitted Electronic Document by the recipient; (d) the storage and archiving of the Electronic Document by sender and recipient; and (e) the use by recipient of the Electronic Document for purposes permitted

This document is a MODIFIED version of EJCDC® C-700, Standard General Conditions of the Construction Contract. Copyright© 2018 National Society of Professional Engineers, American Council of Engineering Companies, and American Society of Civil Engineers. All rights reserved.

by this Contract. Electronic Means does not include the use of text messaging, or of Facebook, Twitter, Instagram, or similar social media services for transmission of Electronic Documents.

22. *Engineer*—The individual or entity named as such in the Agreement.

23. *Field Order*—A written order issued by Engineer which requires minor changes in the Work but does not change the Contract Price or the Contract Times.

24. *Hazardous Environmental Condition*—The presence at the Site of Constituents of Concern in such quantities or circumstances that may present a danger to persons or property exposed thereto.

    a. The presence at the Site of materials that are necessary for the execution of the Work, or that are to be incorporated into the Work, and that are controlled and contained pursuant to industry practices, Laws and Regulations, and the requirements of the Contract, is not a Hazardous Environmental Condition.

    b. The presence of Constituents of Concern that are to be removed or remediated as part of the Work is not a Hazardous Environmental Condition.

    c. The presence of Constituents of Concern as part of the routine, anticipated, and obvious working conditions at the Site, is not a Hazardous Environmental Condition.

25. *Laws and Regulations; Laws or Regulations*—Any and all applicable laws, statutes, rules, regulations, ordinances, codes, and binding decrees, resolutions, and orders of any and all governmental bodies, agencies, authorities, and courts having jurisdiction.

26. *Liens*—Charges, security interests, or encumbrances upon Contract-related funds, real property, or personal property.

27. *Milestone*—A principal event in the performance of the Work that the Contract requires Contractor to achieve by an intermediate completion date, or by a time prior to Substantial Completion of all the Work.

28. *Notice of Award*—The written notice by Owner to a Bidder of Owner's acceptance of the Bid.

29. *Notice to Proceed*—A written notice by Owner to Contractor fixing the date on which the Contract Times will commence to run and on which Contractor shall start to perform the Work.

30. *Owner*—The individual or entity with which Contractor has contracted regarding the Work, and which has agreed to pay Contractor for the performance of the Work, pursuant to the terms of the Contract.

31. *Progress Schedule*—A schedule, prepared and maintained by Contractor, describing the sequence and duration of the activities comprising Contractor's plan to accomplish the Work within the Contract Times.

32. *Project*—The total undertaking to be accomplished for Owner by engineers, contractors, and others, including planning, study, design, construction, testing, commissioning, and start-up, and of which the Work to be performed under the Contract Documents is a part.

33. *Resident Project Representative*—The authorized representative of Engineer assigned to assist Engineer at the Site. As used herein, the term Resident Project Representative (RPR) includes any assistants or field staff of Resident Project Representative.

This document is a MODIFIED version of EJCDC® C-700, Standard General Conditions of the Construction Contract. Copyright© 2018 National Society of Professional Engineers, American Council of Engineering Companies, and American Society of Civil Engineers. All rights reserved.

34. *Samples*—Physical examples of materials, equipment, or workmanship that are representative of some portion of the Work and that establish the standards by which such portion of the Work will be judged.

35. *Schedule of Submittals*—A schedule, prepared and maintained by Contractor, of required submittals and the time requirements for Engineer's review of the submittals.

36. *Schedule of Values*—A schedule, prepared and maintained by Contractor, allocating portions of the Contract Price to various portions of the Work and used as the basis for reviewing Contractor's Applications for Payment.

37. *Shop Drawings*—All drawings, diagrams, illustrations, schedules, and other data or information that are specifically prepared or assembled by or for Contractor and submitted by Contractor to illustrate some portion of the Work. Shop Drawings, whether approved or not, are not Drawings and are not Contract Documents.

38. *Site*—Lands or areas indicated in the Contract Documents as being furnished by Owner upon which the Work is to be performed, including rights-of-way and easements, and such other lands or areas furnished by Owner which are designated for the use of Contractor.

39. *Specifications*—The part of the Contract that consists of written requirements for materials, equipment, systems, standards, and workmanship as applied to the Work, and certain administrative requirements and procedural matters applicable to the Work.

40. *Subcontractor*—An individual or entity having a direct contract with Contractor or with any other Subcontractor for the performance of a part of the Work.

41. *Submittal*—A written or graphic document, prepared by or for Contractor, which the Contract Documents require Contractor to submit to Engineer, or that is indicated as a Submittal in the Schedule of Submittals accepted by Engineer. Submittals may include Shop Drawings and Samples; schedules; product data; Owner-delegated designs; sustainable design information; information on special procedures; testing plans; results of tests and evaluations, source quality-control testing and inspections, and field or Site quality-control testing and inspections; warranties and certifications; Suppliers' instructions and reports; records of delivery of spare parts and tools; operations and maintenance data; Project photographic documentation; record documents; and other such documents required by the Contract Documents. Submittals, whether or not approved or accepted by Engineer, are not Contract Documents. Change Proposals, Change Orders, Claims, notices, Applications for Payment, and requests for interpretation or clarification are not Submittals.

42. *Substantial Completion*—The time at which the Work (or a specified part thereof) has progressed to the point where, in the opinion of Engineer, the Work (or a specified part thereof) is sufficiently complete, in accordance with the Contract Documents, so that the Work (or a specified part thereof) can be utilized for the purposes for which it is intended. The terms "substantially complete" and "substantially completed" as applied to all or part of the Work refer to Substantial Completion of such Work.

43. *Successful Bidder*—The Bidder to which the Owner makes an award of contract.

44. *Supplementary Conditions*—The part of the Contract that amends or supplements these General Conditions.

45. *Supplier*—A manufacturer, fabricator, supplier, distributor, or vendor having a direct

This document is a MODIFIED version of EJCDC® C-700, Standard General Conditions of the Construction Contract. Copyright© 2018 National Society of Professional Engineers, American Council of Engineering Companies, and American Society of Civil Engineers. All rights reserved.

contract with Contractor or with any Subcontractor to furnish materials or equipment to be incorporated in the Work by Contractor or a Subcontractor.

46. *Technical Data*

    a. Those items expressly identified as Technical Data in the Supplementary Conditions, with respect to either (1) existing subsurface conditions at or adjacent to the Site, or existing physical conditions at or adjacent to the Site including existing surface or subsurface structures (except Underground Facilities) or (2) Hazardous Environmental Conditions at the Site.

    b. If no such express identifications of Technical Data have been made with respect to conditions at the Site, then Technical Data is defined, with respect to conditions at the Site under Paragraphs 5.03, 5.04, and 5.06, as the data contained in boring logs, recorded measurements of subsurface water levels, assessments of the condition of subsurface facilities, laboratory test results, and other factual, objective information regarding conditions at the Site that are set forth in any geotechnical, environmental, or other Site or facilities conditions report prepared for the Project and made available to Contractor.

    c. Information and data regarding the presence or location of Underground Facilities are not intended to be categorized, identified, or defined as Technical Data, and instead Underground Facilities are shown or indicated on the Drawings.

47. *Underground Facilities*—All active or not-in-service underground lines, pipelines, conduits, ducts, encasements, cables, wires, manholes, vaults, tanks, tunnels, or other such facilities or systems at the Site, including but not limited to those facilities or systems that produce, transmit, distribute, or convey telephone or other communications, cable television, fiber optic transmissions, power, electricity, light, heat, gases, oil, crude oil products, liquid petroleum products, water, steam, waste, wastewater, storm water, other liquids or chemicals, or traffic or other control systems. An abandoned facility or system is not an Underground Facility.

48. *Unit Price Work*—Work to be paid for on the basis of unit prices.

49. *Work*—The entire construction or the various separately identifiable parts thereof required to be provided under the Contract Documents. Work includes and is the result of performing or providing all labor, services, and documentation necessary to produce such construction; furnishing, installing, and incorporating all materials and equipment into such construction; and may include related services such as testing, start-up, and commissioning, all as required by the Contract Documents.

50. *Work Change Directive*—A written directive to Contractor issued on or after the Effective Date of the Contract, signed by Owner and recommended by Engineer, ordering an addition, deletion, or revision in the Work.

1.02 *Terminology*

A. The words and terms discussed in Paragraphs 1.02.B, C, D, and E are not defined terms that require initial capital letters, but, when used in the Bidding Requirements or Contract Documents, have the indicated meaning.

B. *Intent of Certain Terms or Adjectives*: The Contract Documents include the terms "as allowed," "as approved," "as ordered," "as directed" or terms of like effect or import to authorize an exercise of professional judgment by Engineer. In addition, the adjectives "reasonable,"

This document is a MODIFIED version of EJCDC® C-700, Standard General Conditions of the Construction Contract. Copyright© 2018 National Society of Professional Engineers, American Council of Engineering Companies, and American Society of Civil Engineers. All rights reserved.

"suitable," "acceptable," "proper," "satisfactory," or adjectives of like effect or import are used to describe an action or determination of Engineer as to the Work. It is intended that such exercise of professional judgment, action, or determination will be solely to evaluate, in general, the Work for compliance with the information in the Contract Documents and with the design concept of the Project as a functioning whole as shown or indicated in the Contract Documents (unless there is a specific statement indicating otherwise). The use of any such term or adjective is not intended to and shall not be effective to assign to Engineer any duty or authority to supervise or direct the performance of the Work, or any duty or authority to undertake responsibility contrary to the provisions of Article 10 or any other provision of the Contract Documents.

C. *Day*: The word "day" means a calendar day of 24 hours measured from midnight to the next midnight.

D. *Defective*: The word "defective," when modifying the word "Work," refers to Work that is unsatisfactory, faulty, or deficient in that it:

1. does not conform to the Contract Documents;
2. does not meet the requirements of any applicable inspection, reference standard, test, or approval referred to in the Contract Documents; or
3. has been damaged prior to Engineer's recommendation of final payment (unless responsibility for the protection thereof has been assumed by Owner at Substantial Completion in accordance with Paragraph 15.03 or Paragraph 15.04).

E. *Furnish, Install, Perform, Provide*

1. The word "furnish," when used in connection with services, materials, or equipment, means to supply and deliver said services, materials, or equipment to the Site (or some other specified location) ready for use or installation and in usable or operable condition.
2. The word "install," when used in connection with services, materials, or equipment, means to put into use or place in final position said services, materials, or equipment complete and ready for intended use.
3. The words "perform" or "provide," when used in connection with services, materials, or equipment, means to furnish and install said services, materials, or equipment complete and ready for intended use.
4. If the Contract Documents establish an obligation of Contractor with respect to specific services, materials, or equipment, but do not expressly use any of the four words "furnish," "install," "perform," or "provide," then Contractor shall furnish and install said services, materials, or equipment complete and ready for intended use.

F. *Contract Price or Contract Times*: References to a change in "Contract Price or Contract Times" or "Contract Times or Contract Price" or similar, indicate that such change applies to (1) Contract Price, (2) Contract Times, or (3) both Contract Price and Contract Times, as warranted, even if the term "or both" is not expressed.

G. Unless stated otherwise in the Contract Documents, words or phrases that have a well-known technical or construction industry or trade meaning are used in the Contract Documents in accordance with such recognized meaning.

This document is a MODIFIED version of EJCDC® C-700, Standard General Conditions of the Construction Contract. Copyright© 2018 National Society of Professional Engineers, American Council of Engineering Companies, and American Society of Civil Engineers. All rights reserved.

ARTICLE 2—PRELIMINARY MATTERS

2.01 *Delivery of Performance and Payment Bonds; Evidence of Insurance*

A. *Performance and Payment Bonds*: When Contractor delivers the signed counterparts of the Agreement to Owner, Contractor shall also deliver to Owner the performance bond and payment bond (if the Contract requires Contractor to furnish such bonds).

B. *Evidence of Contractor's Insurance*: When Contractor delivers the signed counterparts of the Agreement to Owner, Contractor shall also deliver to Owner, with copies to each additional insured (as identified in the Contract), the certificates, endorsements, and other evidence of insurance required to be provided by Contractor in accordance with Article 6, except to the extent the Supplementary Conditions expressly establish other dates for delivery of specific insurance policies.

C. *Evidence of Owner's Insurance*: After receipt of the signed counterparts of the Agreement and all required bonds and insurance documentation, Owner shall promptly deliver to Contractor, with copies to each additional insured (as identified in the Contract), the certificates and other evidence of insurance required to be provided by Owner under Article 6.

2.02 *Copies of Documents*

A. Owner shall furnish to Contractor four printed copies of the Contract (including one fully signed counterpart of the Agreement), and one copy in electronic portable document format (PDF). Additional printed copies will be furnished upon request at the cost of reproduction.

B. Owner shall maintain and safeguard at least one original printed record version of the Contract, including Drawings and Specifications signed and sealed by Engineer and other design professionals. Owner shall make such original printed record version of the Contract available to Contractor for review. Owner may delegate the responsibilities under this provision to Engineer.

2.03 *Before Starting Construction*

A. *Preliminary Schedules*: Within 10 days after the Effective Date of the Contract (or as otherwise required by the Contract Documents), Contractor shall submit to Engineer for timely review:

1. a preliminary Progress Schedule indicating the times (numbers of days or dates) for starting and completing the various stages of the Work, including any Milestones specified in the Contract;

2. a preliminary Schedule of Submittals; and

3. a preliminary Schedule of Values for all of the Work which includes quantities and prices of items which when added together equal the Contract Price and subdivides the Work into component parts in sufficient detail to serve as the basis for progress payments during performance of the Work. Such prices will include an appropriate amount of overhead and profit applicable to each item of Work.

2.04 *Preconstruction Conference; Designation of Authorized Representatives*

A. Before any Work at the Site is started, a conference attended by Owner, Contractor, Engineer, and others as appropriate will be held to establish a working understanding among the parties as to the Work, and to discuss the schedules referred to in Paragraph 2.03.A, procedures for handling Shop Drawings, Samples, and other Submittals, processing Applications for Payment, electronic or digital transmittals, and maintaining required records.

This document is a MODIFIED version of EJCDC® C-700, Standard General Conditions of the Construction Contract. Copyright© 2018 National Society of Professional Engineers, American Council of Engineering Companies, and American Society of Civil Engineers. All rights reserved.

B. At this conference Owner and Contractor each shall designate, in writing, a specific individual to act as its authorized representative with respect to the services and responsibilities under the Contract. Such individuals shall have the authority to transmit and receive information, render decisions relative to the Contract, and otherwise act on behalf of each respective party.

2.05 *Acceptance of Schedules*

A. At least 10 days before submission of the first Application for Payment a conference, attended by Contractor, Engineer, and others as appropriate, will be held to review the schedules submitted in accordance with Paragraph 2.03.A. No progress payment will be made to Contractor until acceptable schedules are submitted to Engineer.

1. The Progress Schedule will be acceptable to Engineer if it provides an orderly progression of the Work to completion within the Contract Times. Such acceptance will not impose on Engineer responsibility for the Progress Schedule, for sequencing, scheduling, or progress of the Work, nor interfere with or relieve Contractor from Contractor's full responsibility therefor.

2. Contractor's Schedule of Submittals will be acceptable to Engineer if it provides a workable arrangement for reviewing and processing the required submittals.

3. Contractor's Schedule of Values will be acceptable to Engineer as to form and substance if it provides a reasonable allocation of the Contract Price to the component parts of the Work.

4. If a schedule is not acceptable, Contractor will have an additional 10 days to revise and resubmit the schedule.

2.06 *Electronic Transmittals*

A. Except as otherwise stated elsewhere in the Contract, the Owner, Engineer, and Contractor may send, and shall accept, Electronic Documents transmitted by Electronic Means.

B. If the Contract does not establish protocols for Electronic Means, then Owner, Engineer, and Contractor shall jointly develop such protocols.

C. Subject to any governing protocols for Electronic Means, when transmitting Electronic Documents by Electronic Means, the transmitting party makes no representations as to long-term compatibility, usability, or readability of the Electronic Documents resulting from the recipient's use of software application packages, operating systems, or computer hardware differing from those used in the drafting or transmittal of the Electronic Documents.

ARTICLE 3—CONTRACT DOCUMENTS: INTENT, REQUIREMENTS, REUSE

3.01 *Intent*

A. The Contract Documents are complementary; what is required by one Contract Document is as binding as if required by all.

B. It is the intent of the Contract Documents to describe a functionally complete Project (or part thereof) to be constructed in accordance with the Contract Documents.

C. Unless otherwise stated in the Contract Documents, if there is a discrepancy between the electronic versions of the Contract Documents (including any printed copies derived from such electronic versions) and the printed record version, the printed record version will govern.

This document is a MODIFIED version of EJCDC® C-700, Standard General Conditions of the Construction Contract. Copyright© 2018 National Society of Professional Engineers, American Council of Engineering Companies, and American Society of Civil Engineers. All rights reserved.

D. The Contract supersedes prior negotiations, representations, and agreements, whether written or oral.

E. Engineer will issue clarifications and interpretations of the Contract Documents as provided herein.

F. Any provision or part of the Contract Documents held to be void or unenforceable under any Law or Regulation will be deemed stricken, and all remaining provisions will continue to be valid and binding upon Owner and Contractor, which agree that the Contract Documents will be reformed to replace such stricken provision or part thereof with a valid and enforceable provision that comes as close as possible to expressing the intention of the stricken provision.

G. Nothing in the Contract Documents creates:

1. any contractual relationship between Owner or Engineer and any Subcontractor, Supplier, or other individual or entity performing or furnishing any of the Work, for the benefit of such Subcontractor, Supplier, or other individual or entity; or

2. any obligation on the part of Owner or Engineer to pay or to see to the payment of any money due any such Subcontractor, Supplier, or other individual or entity, except as may otherwise be required by Laws and Regulations.

3.02 *Reference Standards*

A. *Standards Specifications, Codes, Laws and Regulations*

1. Reference in the Contract Documents to standard specifications, manuals, reference standards, or codes of any technical society, organization, or association, or to Laws or Regulations, whether such reference be specific or by implication, means the standard specification, manual, reference standard, code, or Laws or Regulations in effect at the time of opening of Bids (or on the Effective Date of the Contract if there were no Bids), except as may be otherwise specifically stated in the Contract Documents.

2. No provision of any such standard specification, manual, reference standard, or code, and no instruction of a Supplier, will be effective to change the duties or responsibilities of Owner, Contractor, or Engineer from those set forth in the part of the Contract Documents prepared by or for Engineer. No such provision or instruction shall be effective to assign to Owner or Engineer any duty or authority to supervise or direct the performance of the Work, or any duty or authority to undertake responsibility inconsistent with the provisions of the part of the Contract Documents prepared by or for Engineer.

3.03 *Reporting and Resolving Discrepancies*

A. *Reporting Discrepancies*

1. *Contractor's Verification of Figures and Field Measurements*: Before undertaking each part of the Work, Contractor shall carefully study the Contract Documents, and check and verify pertinent figures and dimensions therein, particularly with respect to applicable field measurements. Contractor shall promptly report in writing to Engineer any conflict, error, ambiguity, or discrepancy that Contractor discovers, or has actual knowledge of, and shall not proceed with any Work affected thereby until the conflict, error, ambiguity, or discrepancy is resolved by a clarification or interpretation by Engineer, or by an amendment or supplement to the Contract issued pursuant to Paragraph 11.01.

2. *Contractor's Review of Contract Documents*: If, before or during the performance of the

This document is a MODIFIED version of EJCDC® C-700, Standard General Conditions of the Construction Contract. Copyright© 2018 National Society of Professional Engineers, American Council of Engineering Companies, and American Society of Civil Engineers. All rights reserved.

Work, Contractor discovers any conflict, error, ambiguity, or discrepancy within the Contract Documents, or between the Contract Documents and (a) any applicable Law or Regulation, (b) actual field conditions, (c) any standard specification, manual, reference standard, or code, or (d) any instruction of any Supplier, then Contractor shall promptly report it to Engineer in writing. Contractor shall not proceed with the Work affected thereby (except in an emergency as required by Paragraph 7.15) until the conflict, error, ambiguity, or discrepancy is resolved, by a clarification or interpretation by Engineer, or by an amendment or supplement to the Contract issued pursuant to Paragraph 11.01.

3. Contractor shall not be liable to Owner or Engineer for failure to report any conflict, error, ambiguity, or discrepancy in the Contract Documents unless Contractor had actual knowledge thereof.

B. *Resolving Discrepancies*

1. Except as may be otherwise specifically stated in the Contract Documents, the provisions of the part of the Contract Documents prepared by or for Engineer take precedence in resolving any conflict, error, ambiguity, or discrepancy between such provisions of the Contract Documents and:

   a. the provisions of any standard specification, manual, reference standard, or code, or the instruction of any Supplier (whether or not specifically incorporated by reference as a Contract Document); or

   b. the provisions of any Laws or Regulations applicable to the performance of the Work (unless such an interpretation of the provisions of the Contract Documents would result in violation of such Law or Regulation).

3.04 *Requirements of the Contract Documents*

A. During the performance of the Work and until final payment, Contractor and Owner shall submit to the Engineer in writing all matters in question concerning the requirements of the Contract Documents (sometimes referred to as requests for information or interpretation—RFIs), or relating to the acceptability of the Work under the Contract Documents, as soon as possible after such matters arise. Engineer will be the initial interpreter of the requirements of the Contract Documents, and judge of the acceptability of the Work.

B. Engineer will, with reasonable promptness, render a written clarification, interpretation, or decision on the issue submitted, or initiate an amendment or supplement to the Contract Documents. Engineer's written clarification, interpretation, or decision will be final and binding on Contractor, unless it appeals by submitting a Change Proposal, and on Owner, unless it appeals by filing a Claim.

C. If a submitted matter in question concerns terms and conditions of the Contract Documents that do not involve (1) the performance or acceptability of the Work under the Contract Documents, (2) the design (as set forth in the Drawings, Specifications, or otherwise), or (3) other engineering or technical matters, then Engineer will promptly notify Owner and Contractor in writing that Engineer is unable to provide a decision or interpretation. If Owner and Contractor are unable to agree on resolution of such a matter in question, either party may pursue resolution as provided in Article 12.

3.05 *Reuse of Documents*

A. Contractor and its Subcontractors and Suppliers shall not:

This document is a MODIFIED version of EJCDC® C-700, Standard General Conditions of the Construction Contract. Copyright© 2018 National Society of Professional Engineers, American Council of Engineering Companies, and American Society of Civil Engineers. All rights reserved.

1. have or acquire any title to or ownership rights in any of the Drawings, Specifications, or other documents (or copies of any thereof) prepared by or bearing the seal of Engineer or its consultants, including electronic media versions, or reuse any such Drawings, Specifications, other documents, or copies thereof on extensions of the Project or any other project without written consent of Owner and Engineer and specific written verification or adaptation by Engineer; or

2. have or acquire any title or ownership rights in any other Contract Documents, reuse any such Contract Documents for any purpose without Owner's express written consent, or violate any copyrights pertaining to such Contract Documents.

B. The prohibitions of this Paragraph 3.05 will survive final payment, or termination of the Contract. Nothing herein precludes Contractor from retaining copies of the Contract Documents for record purposes.

ARTICLE 4—COMMENCEMENT AND PROGRESS OF THE WORK

4.01 *Commencement of Contract Times; Notice to Proceed*

A. The Contract Times will commence to run on the 30th day after the Effective Date of the Contract or, if a Notice to Proceed is given, on the day indicated in the Notice to Proceed. A Notice to Proceed may be given at any time within 30 days after the Effective Date of the Contract. In no event will the Contract Times commence to run later than the 60th day after the day of Bid opening or the 30th day after the Effective Date of the Contract, whichever date is earlier.

4.02 *Starting the Work*

A. Contractor shall start to perform the Work on the date when the Contract Times commence to run. No Work may be done at the Site prior to such date.

4.03 *Reference Points*

A. Owner shall provide engineering surveys to establish reference points for construction which in Engineer's judgment are necessary to enable Contractor to proceed with the Work. Contractor shall be responsible for laying out the Work, shall protect and preserve the established reference points and property monuments, and shall make no changes or relocations without the prior written approval of Owner. Contractor shall report to Engineer whenever any reference point or property monument is lost or destroyed or requires relocation because of necessary changes in grades or locations, and shall be responsible for the accurate replacement or relocation of such reference points or property monuments by professionally qualified personnel.

4.04 *Progress Schedule*

A. Contractor shall adhere to the Progress Schedule established in accordance with Paragraph 2.05 as it may be adjusted from time to time as provided below.

1. Contractor shall submit to Engineer for acceptance (to the extent indicated in Paragraph 2.05) proposed adjustments in the Progress Schedule that will not result in changing the Contract Times.

2. Proposed adjustments in the Progress Schedule that will change the Contract Times must be submitted in accordance with the requirements of Article 11.

B. Contractor shall carry on the Work and adhere to the Progress Schedule during all disputes or

This document is a MODIFIED version of EJCDC® C-700, Standard General Conditions of the Construction Contract. Copyright© 2018 National Society of Professional Engineers, American Council of Engineering Companies, and American Society of Civil Engineers. All rights reserved.

disagreements with Owner. No Work will be delayed or postponed pending resolution of any disputes or disagreements, or during any appeal process, except as permitted by Paragraph 16.04, or as Owner and Contractor may otherwise agree in writing.

4.05 *Delays in Contractor's Progress*

A. If Owner, Engineer, or anyone for whom Owner is responsible, delays, disrupts, or interferes with the performance or progress of the Work, then Contractor shall be entitled to an equitable adjustment in Contract Price or Contract Times.

B. Contractor shall not be entitled to an adjustment in Contract Price or Contract Times for delay, disruption, or interference caused by or within the control of Contractor. Delay, disruption, and interference attributable to and within the control of a Subcontractor or Supplier shall be deemed to be within the control of Contractor.

C. If Contractor's performance or progress is delayed, disrupted, or interfered with by unanticipated causes not the fault of and beyond the control of Owner, Contractor, and those for which they are responsible, then Contractor shall be entitled to an equitable adjustment in Contract Times. Such an adjustment will be Contractor's sole and exclusive remedy for the delays, disruption, and interference described in this paragraph. Causes of delay, disruption, or interference that may give rise to an adjustment in Contract Times under this paragraph include but are not limited to the following:

1. Severe and unavoidable natural catastrophes such as fires, floods, epidemics, and earthquakes;

2. Abnormal weather conditions;

3. Acts or failures to act of third-party utility owners or other third-party entities (other than those third-party utility owners or other third-party entities performing other work at or adjacent to the Site as arranged by or under contract with Owner, as contemplated in Article 8); and

4. Acts of war or terrorism.

D. Contractor's entitlement to an adjustment of Contract Times or Contract Price is limited as follows:

1. Contractor's entitlement to an adjustment of the Contract Times is conditioned on the delay, disruption, or interference adversely affecting an activity on the critical path to completion of the Work, as of the time of the delay, disruption, or interference.

2. Contractor shall not be entitled to an adjustment in Contract Price for any delay, disruption, or interference if such delay is concurrent with a delay, disruption, or interference caused by or within the control of Contractor. Such a concurrent delay by Contractor shall not preclude an adjustment of Contract Times to which Contractor is otherwise entitled.

3. Adjustments of Contract Times or Contract Price are subject to the provisions of Article 11.

E. Each Contractor request or Change Proposal seeking an increase in Contract Times or Contract Price must be supplemented by supporting data that sets forth in detail the following:

1. The circumstances that form the basis for the requested adjustment;

2. The date upon which each cause of delay, disruption, or interference began to affect the

This document is a MODIFIED version of EJCDC® C-700, Standard General Conditions of the Construction Contract. Copyright© 2018 National Society of Professional Engineers, American Council of Engineering Companies, and American Society of Civil Engineers. All rights reserved.

progress of the Work;

3. The date upon which each cause of delay, disruption, or interference ceased to affect the progress of the Work;

4. The number of days' increase in Contract Times claimed as a consequence of each such cause of delay, disruption, or interference; and

5. The impact on Contract Price, in accordance with the provisions of Paragraph 11.07.

Contractor shall also furnish such additional supporting documentation as Owner or Engineer may require including, where appropriate, a revised progress schedule indicating all the activities affected by the delay, disruption, or interference, and an explanation of the effect of the delay, disruption, or interference on the critical path to completion of the Work.

F. Delays, disruption, and interference to the performance or progress of the Work resulting from the existence of a differing subsurface or physical condition, an Underground Facility that was not shown or indicated by the Contract Documents, or not shown or indicated with reasonable accuracy, and those resulting from Hazardous Environmental Conditions, are governed by Article 5, together with the provisions of Paragraphs 4.05.D and 4.05.E.

G. Paragraph 8.03 addresses delays, disruption, and interference to the performance or progress of the Work resulting from the performance of certain other work at or adjacent to the Site.

ARTICLE 5—SITE; SUBSURFACE AND PHYSICAL CONDITIONS; HAZARDOUS ENVIRONMENTAL CONDITIONS

5.01 *Availability of Lands*

A. Owner shall furnish the Site. Owner shall notify Contractor in writing of any encumbrances or restrictions not of general application but specifically related to use of the Site with which Contractor must comply in performing the Work.

B. Upon reasonable written request, Owner shall furnish Contractor with a current statement of record legal title and legal description of the lands upon which permanent improvements are to be made and Owner's interest therein as necessary for giving notice of or filing a mechanic's or construction lien against such lands in accordance with applicable Laws and Regulations.

C. Contractor shall provide for all additional lands and access thereto that may be required for temporary construction facilities or storage of materials and equipment.

5.02 *Use of Site and Other Areas*

A. *Limitation on Use of Site and Other Areas*

1. Contractor shall confine construction equipment, temporary construction facilities, the storage of materials and equipment, and the operations of workers to the Site, adjacent areas that Contractor has arranged to use through construction easements or otherwise, and other adjacent areas permitted by Laws and Regulations, and shall not unreasonably encumber the Site and such other adjacent areas with construction equipment or other materials or equipment. Contractor shall assume full responsibility for (a) damage to the Site; (b) damage to any such other adjacent areas used for Contractor's operations; (c) damage to any other adjacent land or areas, or to improvements, structures, utilities, or similar facilities located at such adjacent lands or areas; and (d) for injuries and losses sustained by the owners or occupants of any such land or areas; provided that such damage or injuries result from the performance of the Work or from other actions or

This document is a MODIFIED version of EJCDC® C-700, Standard General Conditions of the Construction Contract. Copyright© 2018 National Society of Professional Engineers, American Council of Engineering Companies, and American Society of Civil Engineers. All rights reserved.

conduct of the Contractor or those for which Contractor is responsible.

2. If a damage or injury claim is made by the owner or occupant of any such land or area because of the performance of the Work, or because of other actions or conduct of the Contractor or those for which Contractor is responsible, Contractor shall (a) take immediate corrective or remedial action as required by Paragraph 7.13, or otherwise; (b) promptly attempt to settle the claim as to all parties through negotiations with such owner or occupant, or otherwise resolve the claim by arbitration or other dispute resolution proceeding, or in a court of competent jurisdiction; and (c) to the fullest extent permitted by Laws and Regulations, indemnify and hold harmless Owner and Engineer, and the officers, directors, members, partners, employees, agents, consultants and subcontractors of each and any of them, from and against any such claim, and against all costs, losses, and damages (including but not limited to all fees and charges of engineers, architects, attorneys, and other professionals and all court or arbitration or other dispute resolution costs) arising out of or relating to any claim or action, legal or equitable, brought by any such owner or occupant against Owner, Engineer, or any other party indemnified hereunder to the extent caused directly or indirectly, in whole or in part by, or based upon, Contractor's performance of the Work, or because of other actions or conduct of the Contractor or those for which Contractor is responsible.

B. *Removal of Debris During Performance of the Work*: During the progress of the Work the Contractor shall keep the Site and other adjacent areas free from accumulations of waste materials, rubbish, and other debris. Removal and disposal of such waste materials, rubbish, and other debris will conform to applicable Laws and Regulations.

C. *Cleaning*: Prior to Substantial Completion of the Work Contractor shall clean the Site and the Work and make it ready for utilization by Owner. At the completion of the Work Contractor shall remove from the Site and adjacent areas all tools, appliances, construction equipment and machinery, and surplus materials and shall restore to original condition all property not designated for alteration by the Contract Documents.

D. *Loading of Structures*: Contractor shall not load nor permit any part of any structure to be loaded in any manner that will endanger the structure, nor shall Contractor subject any part of the Work or adjacent structures or land to stresses or pressures that will endanger them.

5.03 *Subsurface and Physical Conditions*

A. *Reports and Drawings*: The Supplementary Conditions identify:

1. Those reports of explorations and tests of subsurface conditions at or adjacent to the Site that contain Technical Data;

2. Those drawings of existing physical conditions at or adjacent to the Site, including those drawings depicting existing surface or subsurface structures at or adjacent to the Site (except Underground Facilities), that contain Technical Data; and

3. Technical Data contained in such reports and drawings.

B. *Underground Facilities*: Underground Facilities are shown or indicated on the Drawings, pursuant to Paragraph 5.05, and not in the drawings referred to in Paragraph 5.03.A. Information and data regarding the presence or location of Underground Facilities are not intended to be categorized, identified, or defined as Technical Data.

C. *Reliance by Contractor on Technical Data*: Contractor may rely upon the accuracy of the Technical Data expressly identified in the Supplementary Conditions with respect to such

This document is a MODIFIED version of EJCDC® C-700, Standard General Conditions of the Construction Contract. Copyright© 2018 National Society of Professional Engineers, American Council of Engineering Companies, and American Society of Civil Engineers. All rights reserved.

reports and drawings, but such reports and drawings are not Contract Documents. If no such express identification has been made, then Contractor may rely upon the accuracy of the Technical Data as defined in Paragraph 1.01.A.46.b.

D. *Limitations of Other Data and Documents*: Except for such reliance on Technical Data, Contractor may not rely upon or make any claim against Owner or Engineer, or any of their officers, directors, members, partners, employees, agents, consultants, or subcontractors, with respect to:

1. the completeness of such reports and drawings for Contractor's purposes, including, but not limited to, any aspects of the means, methods, techniques, sequences, and procedures of construction to be employed by Contractor, and safety precautions and programs incident thereto;
2. other data, interpretations, opinions, and information contained in such reports or shown or indicated in such drawings;
3. the contents of other Site-related documents made available to Contractor, such as record drawings from other projects at or adjacent to the Site, or Owner's archival documents concerning the Site; or
4. any Contractor interpretation of or conclusion drawn from any Technical Data or any such other data, interpretations, opinions, or information.

5.04 *Differing Subsurface or Physical Conditions*

A. *Notice by Contractor*: If Contractor believes that any subsurface or physical condition that is uncovered or revealed at the Site:

1. is of such a nature as to establish that any Technical Data on which Contractor is entitled to rely as provided in Paragraph 5.03 is materially inaccurate;
2. is of such a nature as to require a change in the Drawings or Specifications;
3. differs materially from that shown or indicated in the Contract Documents; or
4. is of an unusual nature, and differs materially from conditions ordinarily encountered and generally recognized as inherent in work of the character provided for in the Contract Documents;

then Contractor shall, promptly after becoming aware thereof and before further disturbing the subsurface or physical conditions or performing any Work in connection therewith (except in an emergency as required by Paragraph 7.15), notify Owner and Engineer in writing about such condition. Contractor shall not further disturb such condition or perform any Work in connection therewith (except with respect to an emergency) until receipt of a written statement permitting Contractor to do so.

B. *Engineer's Review*: After receipt of written notice as required by the preceding paragraph, Engineer will promptly review the subsurface or physical condition in question; determine whether it is necessary for Owner to obtain additional exploration or tests with respect to the condition; conclude whether the condition falls within any one or more of the differing site condition categories in Paragraph 5.04.A; obtain any pertinent cost or schedule information from Contractor; prepare recommendations to Owner regarding the Contractor's resumption of Work in connection with the subsurface or physical condition in question and the need for any change in the Drawings or Specifications; and advise Owner in writing of Engineer's findings, conclusions, and recommendations.

This document is a MODIFIED version of EJCDC® C-700, Standard General Conditions of the Construction Contract. Copyright© 2018 National Society of Professional Engineers, American Council of Engineering Companies, and American Society of Civil Engineers. All rights reserved.

C. *Owner's Statement to Contractor Regarding Site Condition*: After receipt of Engineer's written findings, conclusions, and recommendations, Owner shall issue a written statement to Contractor (with a copy to Engineer) regarding the subsurface or physical condition in question, addressing the resumption of Work in connection with such condition, indicating whether any change in the Drawings or Specifications will be made, and adopting or rejecting Engineer's written findings, conclusions, and recommendations, in whole or in part.

D. *Early Resumption of Work*: If at any time Engineer determines that Work in connection with the subsurface or physical condition in question may resume prior to completion of Engineer's review or Owner's issuance of its statement to Contractor, because the condition in question has been adequately documented, and analyzed on a preliminary basis, then the Engineer may at its discretion instruct Contractor to resume such Work.

E. *Possible Price and Times Adjustments*

1. Contractor shall be entitled to an equitable adjustment in Contract Price or Contract Times, to the extent that the existence of a differing subsurface or physical condition, or any related delay, disruption, or interference, causes an increase or decrease in Contractor's cost of, or time required for, performance of the Work; subject, however, to the following:

    a. Such condition must fall within any one or more of the categories described in Paragraph 5.04.A;

    b. With respect to Work that is paid for on a unit price basis, any adjustment in Contract Price will be subject to the provisions of Paragraph 13.03; and,

    c. Contractor's entitlement to an adjustment of the Contract Times is subject to the provisions of Paragraphs 4.05.D and 4.05.E.

2. Contractor shall not be entitled to any adjustment in the Contract Price or Contract Times with respect to a subsurface or physical condition if:

    a. Contractor knew of the existence of such condition at the time Contractor made a commitment to Owner with respect to Contract Price and Contract Times by the submission of a Bid or becoming bound under a negotiated contract, or otherwise;

    b. The existence of such condition reasonably could have been discovered or revealed as a result of any examination, investigation, exploration, test, or study of the Site and contiguous areas expressly required by the Bidding Requirements or Contract Documents to be conducted by or for Contractor prior to Contractor's making such commitment; or

    c. Contractor failed to give the written notice required by Paragraph 5.04.A.

3. If Owner and Contractor agree regarding Contractor's entitlement to and the amount or extent of any adjustment in the Contract Price or Contract Times, then any such adjustment will be set forth in a Change Order.

4. Contractor may submit a Change Proposal regarding its entitlement to or the amount or extent of any adjustment in the Contract Price or Contract Times, no later than 30 days after Owner's issuance of the Owner's written statement to Contractor regarding the subsurface or physical condition in question.

F. *Underground Facilities; Hazardous Environmental Conditions*: Paragraph 5.05 governs rights and responsibilities regarding the presence or location of Underground Facilities.

This document is a MODIFIED version of EJCDC® C-700, Standard General Conditions of the Construction Contract. Copyright© 2018 National Society of Professional Engineers, American Council of Engineering Companies, and American Society of Civil Engineers. All rights reserved.

Paragraph 5.06 governs rights and responsibilities regarding Hazardous Environmental Conditions. The provisions of Paragraphs 5.03 and 5.04 are not applicable to the presence or location of Underground Facilities, or to Hazardous Environmental Conditions.

5.05 *Underground Facilities*

A. *Contractor's Responsibilities*: Unless it is otherwise expressly provided in the Supplementary Conditions, the cost of all of the following are included in the Contract Price, and Contractor shall have full responsibility for:

1. reviewing and checking all information and data regarding existing Underground Facilities at the Site;
2. complying with applicable state and local utility damage prevention Laws and Regulations;
3. verifying the actual location of those Underground Facilities shown or indicated in the Contract Documents as being within the area affected by the Work, by exposing such Underground Facilities during the course of construction;
4. coordination of the Work with the owners (including Owner) of such Underground Facilities, during construction; and
5. the safety and protection of all existing Underground Facilities at the Site, and repairing any damage thereto resulting from the Work.

B. *Notice by Contractor*: If Contractor believes that an Underground Facility that is uncovered or revealed at the Site was not shown or indicated on the Drawings, or was not shown or indicated on the Drawings with reasonable accuracy, then Contractor shall, promptly after becoming aware thereof and before further disturbing conditions affected thereby or performing any Work in connection therewith (except in an emergency as required by Paragraph 7.15), notify Owner and Engineer in writing regarding such Underground Facility.

C. *Engineer's Review*: Engineer will:

1. promptly review the Underground Facility and conclude whether such Underground Facility was not shown or indicated on the Drawings, or was not shown or indicated with reasonable accuracy;
2. identify and communicate with the owner of the Underground Facility; prepare recommendations to Owner (and if necessary issue any preliminary instructions to Contractor) regarding the Contractor's resumption of Work in connection with the Underground Facility in question;
3. obtain any pertinent cost or schedule information from Contractor; determine the extent, if any, to which a change is required in the Drawings or Specifications to reflect and document the consequences of the existence or location of the Underground Facility; and
4. advise Owner in writing of Engineer's findings, conclusions, and recommendations.

During such time, Contractor shall be responsible for the safety and protection of such Underground Facility.

D. *Owner's Statement to Contractor Regarding Underground Facility*: After receipt of Engineer's written findings, conclusions, and recommendations, Owner shall issue a written statement to Contractor (with a copy to Engineer) regarding the Underground Facility in question addressing the resumption of Work in connection with such Underground Facility, indicating

This document is a MODIFIED version of EJCDC® C-700, Standard General Conditions of the Construction Contract. Copyright© 2018 National Society of Professional Engineers, American Council of Engineering Companies, and American Society of Civil Engineers. All rights reserved.

whether any change in the Drawings or Specifications will be made, and adopting or rejecting Engineer's written findings, conclusions, and recommendations in whole or in part.

E. *Early Resumption of Work*: If at any time Engineer determines that Work in connection with the Underground Facility may resume prior to completion of Engineer's review or Owner's issuance of its statement to Contractor, because the Underground Facility in question and conditions affected by its presence have been adequately documented, and analyzed on a preliminary basis, then the Engineer may at its discretion instruct Contractor to resume such Work.

F. *Possible Price and Times Adjustments*

1. Contractor shall be entitled to an equitable adjustment in the Contract Price or Contract Times, to the extent that any existing Underground Facility at the Site that was not shown or indicated on the Drawings, or was not shown or indicated with reasonable accuracy, or any related delay, disruption, or interference, causes an increase or decrease in Contractor's cost of, or time required for, performance of the Work; subject, however, to the following:

   a. With respect to Work that is paid for on a unit price basis, any adjustment in Contract Price will be subject to the provisions of Paragraph 13.03;

   b. Contractor's entitlement to an adjustment of the Contract Times is subject to the provisions of Paragraphs 4.05.D and 4.05.E; and

   c. Contractor gave the notice required in Paragraph 5.05.B.

2. If Owner and Contractor agree regarding Contractor's entitlement to and the amount or extent of any adjustment in the Contract Price or Contract Times, then any such adjustment will be set forth in a Change Order.

3. Contractor may submit a Change Proposal regarding its entitlement to or the amount or extent of any adjustment in the Contract Price or Contract Times, no later than 30 days after Owner's issuance of the Owner's written statement to Contractor regarding the Underground Facility in question.

4. The information and data shown or indicated on the Drawings with respect to existing Underground Facilities at the Site is based on information and data (a) furnished by the owners of such Underground Facilities, or by others, (b) obtained from available records, or (c) gathered in an investigation conducted in accordance with the current edition of ASCE 38, Standard Guideline for the Collection and Depiction of Existing Subsurface Utility Data, by the American Society of Civil Engineers. If such information or data is incorrect or incomplete, Contractor's remedies are limited to those set forth in this Paragraph 5.05.F.

5.06 *Hazardous Environmental Conditions at Site*

A. *Reports and Drawings*: The Supplementary Conditions identify:

1. those reports known to Owner relating to Hazardous Environmental Conditions that have been identified at or adjacent to the Site;

2. drawings known to Owner relating to Hazardous Environmental Conditions that have been identified at or adjacent to the Site; and

3. Technical Data contained in such reports and drawings.

This document is a MODIFIED version of EJCDC® C-700, Standard General Conditions of the Construction Contract. Copyright© 2018 National Society of Professional Engineers, American Council of Engineering Companies, and American Society of Civil Engineers. All rights reserved.

B. *Reliance by Contractor on Technical Data Authorized*: Contractor may rely upon the accuracy of the Technical Data expressly identified in the Supplementary Conditions with respect to such reports and drawings, but such reports and drawings are not Contract Documents. If no such express identification has been made, then Contractor may rely on the accuracy of the Technical Data as defined in Paragraph 1.01.A.46.b. Except for such reliance on Technical Data, Contractor may not rely upon or make any claim against Owner or Engineer, or any of their officers, directors, members, partners, employees, agents, consultants, or subcontractors, with respect to:

1. the completeness of such reports and drawings for Contractor's purposes, including, but not limited to, any aspects of the means, methods, techniques, sequences and procedures of construction to be employed by Contractor, and safety precautions and programs incident thereto;

2. other data, interpretations, opinions, and information contained in such reports or shown or indicated in such drawings; or

3. any Contractor interpretation of or conclusion drawn from any Technical Data or any such other data, interpretations, opinions or information.

C. Contractor shall not be responsible for removing or remediating any Hazardous Environmental Condition encountered, uncovered, or revealed at the Site unless such removal or remediation is expressly identified in the Contract Documents to be within the scope of the Work.

D. Contractor shall be responsible for controlling, containing, and duly removing all Constituents of Concern brought to the Site by Contractor, Subcontractors, Suppliers, or anyone else for whom Contractor is responsible, and for any associated costs; and for the costs of removing and remediating any Hazardous Environmental Condition created by the presence of any such Constituents of Concern.

E. If Contractor encounters, uncovers, or reveals a Hazardous Environmental Condition whose removal or remediation is not expressly identified in the Contract Documents as being within the scope of the Work, or if Contractor or anyone for whom Contractor is responsible creates a Hazardous Environmental Condition, then Contractor shall immediately: (1) secure or otherwise isolate such condition; (2) stop all Work in connection with such condition and in any area affected thereby (except in an emergency as required by Paragraph 7.15); and (3) notify Owner and Engineer (and promptly thereafter confirm such notice in writing). Owner shall promptly consult with Engineer concerning the necessity for Owner to retain a qualified expert to evaluate such condition or take corrective action, if any. Promptly after consulting with Engineer, Owner shall take such actions as are necessary to permit Owner to timely obtain required permits and provide Contractor the written notice required by Paragraph 5.06.F. If Contractor or anyone for whom Contractor is responsible created the Hazardous Environmental Condition in question, then Owner may remove and remediate the Hazardous Environmental Condition, and impose a set-off against payments to account for the associated costs.

F. Contractor shall not resume Work in connection with such Hazardous Environmental Condition or in any affected area until after Owner has obtained any required permits related thereto, and delivered written notice to Contractor either (1) specifying that such condition and any affected area is or has been rendered safe for the resumption of Work, or (2) specifying any special conditions under which such Work may be resumed safely.

This document is a MODIFIED version of EJCDC® C-700, Standard General Conditions of the Construction Contract. Copyright© 2018 National Society of Professional Engineers, American Council of Engineering Companies, and American Society of Civil Engineers. All rights reserved.

G. If Owner and Contractor cannot agree as to entitlement to or on the amount or extent, if any, of any adjustment in Contract Price or Contract Times, as a result of such Work stoppage, such special conditions under which Work is agreed to be resumed by Contractor, or any costs or expenses incurred in response to the Hazardous Environmental Condition, then within 30 days of Owner's written notice regarding the resumption of Work, Contractor may submit a Change Proposal, or Owner may impose a set-off. Entitlement to any such adjustment is subject to the provisions of Paragraphs 4.05.D, 4.05.E, 11.07, and 11.08.

H. If, after receipt of such written notice, Contractor does not agree to resume such Work based on a reasonable belief it is unsafe, or does not agree to resume such Work under such special conditions, then Owner may order the portion of the Work that is in the area affected by such condition to be deleted from the Work, following the contractual change procedures in Article 11. Owner may have such deleted portion of the Work performed by Owner's own forces or others in accordance with Article 8.

I. To the fullest extent permitted by Laws and Regulations, Owner shall indemnify and hold harmless Contractor, Subcontractors, and Engineer, and the officers, directors, members, partners, employees, agents, consultants, and subcontractors of each and any of them, from and against all claims, costs, losses, and damages (including but not limited to all fees and charges of engineers, architects, attorneys, and other professionals, and all court, arbitration, or other dispute resolution costs) arising out of or relating to a Hazardous Environmental Condition, provided that such Hazardous Environmental Condition (1) was not shown or indicated in the Drawings, Specifications, or other Contract Documents, identified as Technical Data entitled to limited reliance pursuant to Paragraph 5.06.B, or identified in the Contract Documents to be included within the scope of the Work, and (2) was not created by Contractor or by anyone for whom Contractor is responsible. Nothing in this Paragraph 5.06.I obligates Owner to indemnify any individual or entity from and against the consequences of that individual's or entity's own negligence.

J. To the fullest extent permitted by Laws and Regulations, Contractor shall indemnify and hold harmless Owner and Engineer, and the officers, directors, members, partners, employees, agents, consultants, and subcontractors of each and any of them, from and against all claims, costs, losses, and damages (including but not limited to all fees and charges of engineers, architects, attorneys, and other professionals and all court or arbitration or other dispute resolution costs) arising out of or relating to the failure to control, contain, or remove a Constituent of Concern brought to the Site by Contractor or by anyone for whom Contractor is responsible, or to a Hazardous Environmental Condition created by Contractor or by anyone for whom Contractor is responsible. Nothing in this Paragraph 5.06.J obligates Contractor to indemnify any individual or entity from and against the consequences of that individual's or entity's own negligence.

K. The provisions of Paragraphs 5.03, 5.04, and 5.05 do not apply to the presence of Constituents of Concern or to a Hazardous Environmental Condition uncovered or revealed at the Site.

ARTICLE 6—BONDS AND INSURANCE

6.01 *Performance, Payment, and Other Bonds*

A. Contractor shall furnish a performance bond and a payment bond, each in an amount at least equal to the Contract Price, as security for the faithful performance and payment of Contractor's obligations under the Contract. These bonds must remain in effect until one year after the date when final payment becomes due or until completion of the correction period specified in Paragraph 15.08, whichever is later, except as provided otherwise by Laws or

This document is a MODIFIED version of EJCDC® C-700, Standard General Conditions of the Construction Contract. Copyright© 2018 National Society of Professional Engineers, American Council of Engineering Companies, and American Society of Civil Engineers. All rights reserved.

Regulations, the terms of a prescribed bond form, the Supplementary Conditions, or other provisions of the Contract.

B. Contractor shall also furnish such other bonds (if any) as are required by the Supplementary Conditions or other provisions of the Contract.

C. All bonds must be in the form included in the Bidding Documents or otherwise specified by Owner prior to execution of the Contract, except as provided otherwise by Laws or Regulations, and must be issued and signed by a surety named in "Companies Holding Certificates of Authority as Acceptable Sureties on Federal Bonds and as Acceptable Reinsuring Companies" as published in Department Circular 570 (as amended and supplemented) by the Bureau of the Fiscal Service, U.S. Department of the Treasury. A bond signed by an agent or attorney-in-fact must be accompanied by a certified copy of that individual's authority to bind the surety. The evidence of authority must show that it is effective on the date the agent or attorney-in-fact signed the accompanying bond.

D. Contractor shall obtain the required bonds from surety companies that are duly licensed or authorized, in the state or jurisdiction in which the Project is located, to issue bonds in the required amounts.

E. If the surety on a bond furnished by Contractor is declared bankrupt or becomes insolvent, or the surety ceases to meet the requirements above, then Contractor shall promptly notify Owner and Engineer in writing and shall, within 20 days after the event giving rise to such notification, provide another bond and surety, both of which must comply with the bond and surety requirements above.

F. If Contractor has failed to obtain a required bond, Owner may exclude the Contractor from the Site and exercise Owner's termination rights under Article 16.

G. Upon request to Owner from any Subcontractor, Supplier, or other person or entity claiming to have furnished labor, services, materials, or equipment used in the performance of the Work, Owner shall provide a copy of the payment bond to such person or entity.

H. Upon request to Contractor from any Subcontractor, Supplier, or other person or entity claiming to have furnished labor, services, materials, or equipment used in the performance of the Work, Contractor shall provide a copy of the payment bond to such person or entity.

6.02 *Insurance—General Provisions*

A. Owner and Contractor shall obtain and maintain insurance as required in this article and in the Supplementary Conditions.

B. All insurance required by the Contract to be purchased and maintained by Owner or Contractor shall be obtained from insurance companies that are duly licensed or authorized in the state or jurisdiction in which the Project is located to issue insurance policies for the required limits and coverages. Unless a different standard is indicated in the Supplementary Conditions, all companies that provide insurance policies required under this Contract shall have an A.M. Best rating of A-VII or better.

C. Alternative forms of insurance coverage, including but not limited to self-insurance and "Occupational Accident and Excess Employer's Indemnity Policies," are not sufficient to meet the insurance requirements of this Contract, unless expressly allowed in the Supplementary Conditions.

D. Contractor shall deliver to Owner, with copies to each additional insured identified in the

This document is a MODIFIED version of EJCDC® C-700, Standard General Conditions of the Construction Contract. Copyright© 2018 National Society of Professional Engineers, American Council of Engineering Companies, and American Society of Civil Engineers. All rights reserved.

Contract, certificates of insurance and endorsements establishing that Contractor has obtained and is maintaining the policies and coverages required by the Contract. Upon request by Owner or any other insured, Contractor shall also furnish other evidence of such required insurance, including but not limited to copies of policies, documentation of applicable self-insured retentions (if allowed) and deductibles, full disclosure of all relevant exclusions, and evidence of insurance required to be purchased and maintained by Subcontractors or Suppliers. In any documentation furnished under this provision, Contractor, Subcontractors, and Suppliers may block out (redact) (1) any confidential premium or pricing information and (2) any wording specific to a project or jurisdiction other than those applicable to this Contract.

E. Owner shall deliver to Contractor, with copies to each additional insured identified in the Contract, certificates of insurance and endorsements establishing that Owner has obtained and is maintaining the policies and coverages required of Owner by the Contract (if any). Upon request by Contractor or any other insured, Owner shall also provide other evidence of such required insurance (if any), including but not limited to copies of policies, documentation of applicable self-insured retentions (if allowed) and deductibles, and full disclosure of all relevant exclusions. In any documentation furnished under this provision, Owner may block out (redact) (1) any confidential premium or pricing information and (2) any wording specific to a project or jurisdiction other than those relevant to this Contract.

F. Failure of Owner or Contractor to demand such certificates or other evidence of the other party's full compliance with these insurance requirements, or failure of Owner or Contractor to identify a deficiency in compliance from the evidence provided, will not be construed as a waiver of the other party's obligation to obtain and maintain such insurance.

G. In addition to the liability insurance required to be provided by Contractor, the Owner, at Owner's option, may purchase and maintain Owner's own liability insurance. Owner's liability policies, if any, operate separately and independently from policies required to be provided by Contractor, and Contractor cannot rely upon Owner's liability policies for any of Contractor's obligations to the Owner, Engineer, or third parties.

H. Contractor shall require:

1. Subcontractors to purchase and maintain worker's compensation, commercial general liability, and other insurance that is appropriate for their participation in the Project, and to name as additional insureds Owner and Engineer (and any other individuals or entities identified in the Supplementary Conditions as additional insureds on Contractor's liability policies) on each Subcontractor's commercial general liability insurance policy; and

2. Suppliers to purchase and maintain insurance that is appropriate for their participation in the Project.

I. If either party does not purchase or maintain the insurance required of such party by the Contract, such party shall notify the other party in writing of such failure to purchase prior to the start of the Work, or of such failure to maintain prior to any change in the required coverage.

J. If Contractor has failed to obtain and maintain required insurance, Contractor's entitlement to enter or remain at the Site will end immediately, and Owner may impose an appropriate set-off against payment for any associated costs (including but not limited to the cost of purchasing necessary insurance coverage), and exercise Owner's termination rights under Article 16.

This document is a MODIFIED version of EJCDC® C-700, Standard General Conditions of the Construction Contract. Copyright© 2018 National Society of Professional Engineers, American Council of Engineering Companies, and American Society of Civil Engineers. All rights reserved.

K. Without prejudice to any other right or remedy, if a party has failed to obtain required insurance, the other party may elect (but is in no way obligated) to obtain equivalent insurance to protect such other party's interests at the expense of the party who was required to provide such coverage, and the Contract Price will be adjusted accordingly.

L. Owner does not represent that insurance coverage and limits established in this Contract necessarily will be adequate to protect Contractor or Contractor's interests. Contractor is responsible for determining whether such coverage and limits are adequate to protect its interests, and for obtaining and maintaining any additional insurance that Contractor deems necessary.

M. The insurance and insurance limits required herein will not be deemed as a limitation on Contractor's liability, or that of its Subcontractors or Suppliers, under the indemnities granted to Owner and other individuals and entities in the Contract or otherwise.

N. All the policies of insurance required to be purchased and maintained under this Contract will contain a provision or endorsement that the coverage afforded will not be canceled, or renewal refused, until at least 10 days prior written notice has been given to the purchasing policyholder. Within three days of receipt of any such written notice, the purchasing policyholder shall provide a copy of the notice to each other insured and Engineer.

6.03 *Contractor's Insurance*

A. *Required Insurance*: Contractor shall purchase and maintain Worker's Compensation, Commercial General Liability, and other insurance pursuant to the specific requirements of the Supplementary Conditions.

B. *General Provisions*: The policies of insurance required by this Paragraph 6.03 as supplemented must:

1. include at least the specific coverages required;

2. be written for not less than the limits provided, or those required by Laws or Regulations, whichever is greater;

3. remain in effect at least until the Work is complete (as set forth in Paragraph 15.06.D), and longer if expressly required elsewhere in this Contract, and at all times thereafter when Contractor may be correcting, removing, or replacing defective Work as a warranty or correction obligation, or otherwise, or returning to the Site to conduct other tasks arising from the Contract;

4. apply with respect to the performance of the Work, whether such performance is by Contractor, any Subcontractor or Supplier, or by anyone directly or indirectly employed by any of them to perform any of the Work, or by anyone for whose acts any of them may be liable; and

5. include all necessary endorsements to support the stated requirements.

C. *Additional Insureds*: The Contractor's commercial general liability, automobile liability, employer's liability, umbrella or excess, pollution liability, and unmanned aerial vehicle liability policies, if required by this Contract, must:

1. include and list as additional insureds Owner and Engineer, and any individuals or entities identified as additional insureds in the Supplementary Conditions;

2. include coverage for the respective officers, directors, members, partners, employees,

This document is a MODIFIED version of EJCDC® C-700, Standard General Conditions of the Construction Contract. Copyright© 2018 National Society of Professional Engineers, American Council of Engineering Companies, and American Society of Civil Engineers. All rights reserved.

and consultants of all such additional insureds;

3. afford primary coverage to these additional insureds for all claims covered thereby (including as applicable those arising from both ongoing and completed operations);
4. not seek contribution from insurance maintained by the additional insured; and
5. as to commercial general liability insurance, apply to additional insureds with respect to liability caused in whole or in part by Contractor's acts or omissions, or the acts and omissions of those working on Contractor's behalf, in the performance of Contractor's operations.

6.04 *Builder's Risk and Other Property Insurance*

A. *Builder's Risk*: Unless otherwise provided in the Supplementary Conditions, Contractor shall purchase and maintain builder's risk insurance upon the Work on a completed value basis, in the amount of the Work's full insurable replacement cost (subject to such deductible amounts as may be provided in the Supplementary Conditions or required by Laws and Regulations). The specific requirements applicable to the builder's risk insurance are set forth in the Supplementary Conditions.

B. *Property Insurance for Facilities of Owner Where Work Will Occur*: Owner is responsible for obtaining and maintaining property insurance covering each existing structure, building, or facility in which any part of the Work will occur, or to which any part of the Work will attach or be adjoined. Such property insurance will be written on a special perils (all-risk) form, on a replacement cost basis, providing coverage consistent with that required for the builder's risk insurance, and will be maintained until the Work is complete, as set forth in Paragraph 15.06.D.

C. *Property Insurance for Substantially Complete Facilities*: Promptly after Substantial Completion, and before actual occupancy or use of the substantially completed Work, Owner will obtain property insurance for such substantially completed Work, and maintain such property insurance at least until the Work is complete, as set forth in Paragraph 15.06.D. Such property insurance will be written on a special perils (all-risk) form, on a replacement cost basis, and provide coverage consistent with that required for the builder's risk insurance. The builder's risk insurance may terminate upon written confirmation of Owner's procurement of such property insurance.

D. *Partial Occupancy or Use by Owner*: If Owner will occupy or use a portion or portions of the Work prior to Substantial Completion of all the Work, as provided in Paragraph 15.04, then Owner (directly, if it is the purchaser of the builder's risk policy, or through Contractor) will provide advance notice of such occupancy or use to the builder's risk insurer, and obtain an endorsement consenting to the continuation of coverage prior to commencing such partial occupancy or use.

E. *Insurance of Other Property; Additional Insurance*: If the express insurance provisions of the Contract do not require or address the insurance of a property item or interest, then the entity or individual owning such property item will be responsible for insuring it. If Contractor elects to obtain other special insurance to be included in or supplement the builder's risk or property insurance policies provided under this Paragraph 6.04, it may do so at Contractor's expense.

6.05 *Property Losses; Subrogation*

A. The builder's risk insurance policy purchased and maintained in accordance with Paragraph 6.04 (or an installation floater policy if authorized by the Supplementary

This document is a MODIFIED version of EJCDC® C-700, Standard General Conditions of the Construction Contract. Copyright© 2018 National Society of Professional Engineers, American Council of Engineering Companies, and American Society of Civil Engineers. All rights reserved.

Conditions), will contain provisions to the effect that in the event of payment of any loss or damage the insurer will have no rights of recovery against any insureds thereunder, or against Engineer or its consultants, or their officers, directors, members, partners, employees, agents, consultants, or subcontractors.

1. Owner and Contractor waive all rights against each other and the respective officers, directors, members, partners, employees, agents, consultants, and subcontractors of each and any of them, for all losses and damages caused by, arising out of, or resulting from any of the perils, risks, or causes of loss covered by such policies and any other property insurance applicable to the Work; and, in addition, waive all such rights against Engineer, its consultants, all individuals or entities identified in the Supplementary Conditions as builder's risk or installation floater insureds, and the officers, directors, members, partners, employees, agents, consultants, and subcontractors of each and any of them, under such policies for losses and damages so caused.

2. None of the above waivers extends to the rights that any party making such waiver may have to the proceeds of insurance held by Owner or Contractor as trustee or fiduciary, or otherwise payable under any policy so issued.

B. Any property insurance policy maintained by Owner covering any loss, damage, or consequential loss to Owner's existing structures, buildings, or facilities in which any part of the Work will occur, or to which any part of the Work will attach or adjoin; to adjacent structures, buildings, or facilities of Owner; or to part or all of the completed or substantially completed Work, during partial occupancy or use pursuant to Paragraph 15.04, after Substantial Completion pursuant to Paragraph 15.03, or after final payment pursuant to Paragraph 15.06, will contain provisions to the effect that in the event of payment of any loss or damage the insurer will have no rights of recovery against any insureds thereunder, or against Contractor, Subcontractors, or Engineer, or the officers, directors, members, partners, employees, agents, consultants, or subcontractors of each and any of them, and that the insured is allowed to waive the insurer's rights of subrogation in a written contract executed prior to the loss, damage, or consequential loss.

1. Owner waives all rights against Contractor, Subcontractors, and Engineer, and the officers, directors, members, partners, employees, agents, consultants and subcontractors of each and any of them, for all losses and damages caused by, arising out of, or resulting from fire or any of the perils, risks, or causes of loss covered by such policies.

C. The waivers in this Paragraph 6.05 include the waiver of rights due to business interruption, loss of use, or other consequential loss extending beyond direct physical loss or damage to Owner's property or the Work caused by, arising out of, or resulting from fire or other insured peril, risk, or cause of loss.

D. Contractor shall be responsible for assuring that each Subcontract contains provisions whereby the Subcontractor waives all rights against Owner, Contractor, all individuals or entities identified in the Supplementary Conditions as insureds, the Engineer and its consultants, and the officers, directors, members, partners, employees, agents, consultants, and subcontractors of each and any of them, for all losses and damages caused by, arising out of, relating to, or resulting from fire or other peril, risk, or cause of loss covered by builder's risk insurance, installation floater, and any other property insurance applicable to the Work.

This document is a MODIFIED version of EJCDC® C-700, Standard General Conditions of the Construction Contract. Copyright© 2018 National Society of Professional Engineers, American Council of Engineering Companies, and American Society of Civil Engineers. All rights reserved.

6.06 *Receipt and Application of Property Insurance Proceeds*

A. Any insured loss under the builder's risk and other policies of property insurance required by Paragraph 6.04 will be adjusted and settled with the named insured that purchased the policy. Such named insured shall act as fiduciary for the other insureds, and give notice to such other insureds that adjustment and settlement of a claim is in progress. Any other insured may state its position regarding a claim for insured loss in writing within 15 days after notice of such claim.

B. Proceeds for such insured losses may be made payable by the insurer either jointly to multiple insureds, or to the named insured that purchased the policy in its own right and as fiduciary for other insureds, subject to the requirements of any applicable mortgage clause. A named insured receiving insurance proceeds under the builder's risk and other policies of insurance required by Paragraph 6.04 shall maintain such proceeds in a segregated account, and distribute such proceeds in accordance with such agreement as the parties in interest may reach, or as otherwise required under the dispute resolution provisions of this Contract or applicable Laws and Regulations.

C. If no other special agreement is reached, Contractor shall repair or replace the damaged Work, using allocated insurance proceeds.

ARTICLE 7—CONTRACTOR'S RESPONSIBILITIES

7.01 *Contractor's Means and Methods of Construction*

A. Contractor shall be solely responsible for the means, methods, techniques, sequences, and procedures of construction.

B. If the Contract Documents note, or Contractor determines, that professional engineering or other design services are needed to carry out Contractor's responsibilities for construction means, methods, techniques, sequences, and procedures, or for Site safety, then Contractor shall cause such services to be provided by a properly licensed design professional, at Contractor's expense. Such services are not Owner-delegated professional design services under this Contract, and neither Owner nor Engineer has any responsibility with respect to (1) Contractor's determination of the need for such services, (2) the qualifications or licensing of the design professionals retained or employed by Contractor, (3) the performance of such services, or (4) any errors, omissions, or defects in such services.

7.02 *Supervision and Superintendence*

A. Contractor shall supervise, inspect, and direct the Work competently and efficiently, devoting such attention thereto and applying such skills and expertise as may be necessary to perform the Work in accordance with the Contract Documents.

B. At all times during the progress of the Work, Contractor shall assign a competent resident superintendent who will not be replaced without written notice to Owner and Engineer except under extraordinary circumstances.

7.03 *Labor; Working Hours*

A. Contractor shall provide competent, suitably qualified personnel to survey and lay out the Work and perform construction as required by the Contract Documents. Contractor shall maintain good discipline and order at the Site.

B. Contractor shall be fully responsible to Owner and Engineer for all acts and omissions of Contractor's employees; of Suppliers and Subcontractors, and their employees; and of any

This document is a MODIFIED version of EJCDC® C-700, Standard General Conditions of the Construction Contract. Copyright© 2018 National Society of Professional Engineers, American Council of Engineering Companies, and American Society of Civil Engineers. All rights reserved.

other individuals or entities performing or furnishing any of the Work, just as Contractor is responsible for Contractor's own acts and omissions.

C. Except as otherwise required for the safety or protection of persons or the Work or property at the Site or adjacent thereto, and except as otherwise stated in the Contract Documents, all Work at the Site will be performed during regular working hours, Monday through Friday. Contractor will not perform Work on a Saturday, Sunday, or any legal holiday. Contractor may perform Work outside regular working hours or on Saturdays, Sundays, or legal holidays only with Owner's written consent, which will not be unreasonably withheld.

7.04 *Services, Materials, and Equipment*

A. Unless otherwise specified in the Contract Documents, Contractor shall provide and assume full responsibility for all services, materials, equipment, labor, transportation, construction equipment and machinery, tools, appliances, fuel, power, light, heat, telephone, water, sanitary facilities, temporary facilities, and all other facilities and incidentals necessary for the performance, testing, start up, and completion of the Work, whether or not such items are specifically called for in the Contract Documents.

B. All materials and equipment incorporated into the Work must be new and of good quality, except as otherwise provided in the Contract Documents. All special warranties and guarantees required by the Specifications will expressly run to the benefit of Owner. If required by Engineer, Contractor shall furnish satisfactory evidence (including reports of required tests) as to the source, kind, and quality of materials and equipment.

C. All materials and equipment must be stored, applied, installed, connected, erected, protected, used, cleaned, and conditioned in accordance with instructions of the applicable Supplier, except as otherwise may be provided in the Contract Documents.

7.05 *"Or Equals"*

A. *Contractor's Request; Governing Criteria*: Whenever an item of equipment or material is specified or described in the Contract Documents by using the names of one or more proprietary items or specific Suppliers, the Contract Price has been based upon Contractor furnishing such item as specified. The specification or description of such an item is intended to establish the type, function, appearance, and quality required. Unless the specification or description contains or is followed by words reading that no like, equivalent, or "or equal" item is permitted, Contractor may request that Engineer authorize the use of other items of equipment or material, or items from other proposed Suppliers, under the circumstances described below.

1. If Engineer in its sole discretion determines that an item of equipment or material proposed by Contractor is functionally equal to that named and sufficiently similar so that no change in related Work will be required, Engineer will deem it an "or equal" item. For the purposes of this paragraph, a proposed item of equipment or material will be considered functionally equal to an item so named if:

   a. in the exercise of reasonable judgment Engineer determines that the proposed item:

      1) is at least equal in materials of construction, quality, durability, appearance, strength, and design characteristics;

      2) will reliably perform at least equally well the function and achieve the results imposed by the design concept of the completed Project as a functioning whole;

This document is a MODIFIED version of EJCDC® C-700, Standard General Conditions of the Construction Contract. Copyright© 2018 National Society of Professional Engineers, American Council of Engineering Companies, and American Society of Civil Engineers. All rights reserved.

3) has a proven record of performance and availability of responsive service; and

4) is not objectionable to Owner.

b. Contractor certifies that, if the proposed item is approved and incorporated into the Work:

1) there will be no increase in cost to the Owner or increase in Contract Times; and

2) the item will conform substantially to the detailed requirements of the item named in the Contract Documents.

B. *Contractor's Expense*: Contractor shall provide all data in support of any proposed "or equal" item at Contractor's expense.

C. *Engineer's Evaluation and Determination*: Engineer will be allowed a reasonable time to evaluate each "or-equal" request. Engineer may require Contractor to furnish additional data about the proposed "or-equal" item. Engineer will be the sole judge of acceptability. No "or-equal" item will be ordered, furnished, installed, or utilized until Engineer's review is complete and Engineer determines that the proposed item is an "or-equal," which will be evidenced by an approved Shop Drawing or other written communication. Engineer will advise Contractor in writing of any negative determination.

D. *Effect of Engineer's Determination*: Neither approval nor denial of an "or-equal" request will result in any change in Contract Price. The Engineer's denial of an "or-equal" request will be final and binding, and may not be reversed through an appeal under any provision of the Contract.

E. *Treatment as a Substitution Request*: If Engineer determines that an item of equipment or material proposed by Contractor does not qualify as an "or-equal" item, Contractor may request that Engineer consider the item a proposed substitute pursuant to Paragraph 7.06.

7.06 *Substitutes*

A. *Contractor's Request; Governing Criteria*: Unless the specification or description of an item of equipment or material required to be furnished under the Contract Documents contains or is followed by words reading that no substitution is permitted, Contractor may request that Engineer authorize the use of other items of equipment or material under the circumstances described below. To the extent possible such requests must be made before commencement of related construction at the Site.

1. Contractor shall submit sufficient information as provided below to allow Engineer to determine if the item of material or equipment proposed is functionally equivalent to that named and an acceptable substitute therefor. Engineer will not accept requests for review of proposed substitute items of equipment or material from anyone other than Contractor.

2. The requirements for review by Engineer will be as set forth in Paragraph 7.06.B, as supplemented by the Specifications, and as Engineer may decide is appropriate under the circumstances.

3. Contractor shall make written application to Engineer for review of a proposed substitute item of equipment or material that Contractor seeks to furnish or use. The application:

a. will certify that the proposed substitute item will:

1) perform adequately the functions and achieve the results called for by the

This document is a MODIFIED version of EJCDC® C-700, Standard General Conditions of the Construction Contract. Copyright© 2018 National Society of Professional Engineers, American Council of Engineering Companies, and American Society of Civil Engineers. All rights reserved.

general design;

2) be similar in substance to the item specified; and

3) be suited to the same use as the item specified.

b. will state:

1) the extent, if any, to which the use of the proposed substitute item will necessitate a change in Contract Times;

2) whether use of the proposed substitute item in the Work will require a change in any of the Contract Documents (or in the provisions of any other direct contract with Owner for other work on the Project) to adapt the design to the proposed substitute item; and

3) whether incorporation or use of the proposed substitute item in connection with the Work is subject to payment of any license fee or royalty.

c. will identify:

1) all variations of the proposed substitute item from the item specified; and

2) available engineering, sales, maintenance, repair, and replacement services.

d. will contain an itemized estimate of all costs or credits that will result directly or indirectly from use of such substitute item, including but not limited to changes in Contract Price, shared savings, costs of redesign, and claims of other contractors affected by any resulting change.

B. *Engineer's Evaluation and Determination*: Engineer will be allowed a reasonable time to evaluate each substitute request, and to obtain comments and direction from Owner. Engineer may require Contractor to furnish additional data about the proposed substitute item. Engineer will be the sole judge of acceptability. No substitute will be ordered, furnished, installed, or utilized until Engineer's review is complete and Engineer determines that the proposed item is an acceptable substitute. Engineer's determination will be evidenced by a Field Order or a proposed Change Order accounting for the substitution itself and all related impacts, including changes in Contract Price or Contract Times. Engineer will advise Contractor in writing of any negative determination.

C. *Special Guarantee*: Owner may require Contractor to furnish at Contractor's expense a special performance guarantee or other surety with respect to any substitute.

D. *Reimbursement of Engineer's Cost*: Engineer will record Engineer's costs in evaluating a substitute proposed or submitted by Contractor. Whether or not Engineer approves a substitute so proposed or submitted by Contractor, Contractor shall reimburse Owner for the reasonable charges of Engineer for evaluating each such proposed substitute. Contractor shall also reimburse Owner for the reasonable charges of Engineer for making changes in the Contract Documents (or in the provisions of any other direct contract with Owner) resulting from the acceptance of each proposed substitute.

E. *Contractor's Expense*: Contractor shall provide all data in support of any proposed substitute at Contractor's expense.

F. *Effect of Engineer's Determination*: If Engineer approves the substitution request, Contractor shall execute the proposed Change Order and proceed with the substitution. The Engineer's denial of a substitution request will be final and binding, and may not be reversed through an

This document is a MODIFIED version of EJCDC® C-700, Standard General Conditions of the Construction Contract. Copyright© 2018 National Society of Professional Engineers, American Council of Engineering Companies, and American Society of Civil Engineers. All rights reserved.

appeal under any provision of the Contract. Contractor may challenge the scope of reimbursement costs imposed under Paragraph 7.06.D, by timely submittal of a Change Proposal.

7.07 *Concerning Subcontractors and Suppliers*

A. Contractor may retain Subcontractors and Suppliers for the performance of parts of the Work. Such Subcontractors and Suppliers must be acceptable to Owner. The Contractor's retention of a Subcontractor or Supplier for the performance of parts of the Work will not relieve Contractor's obligation to Owner to perform and complete the Work in accordance with the Contract Documents.

B. Contractor shall retain specific Subcontractors and Suppliers for the performance of designated parts of the Work if required by the Contract to do so.

C. Subsequent to the submittal of Contractor's Bid or final negotiation of the terms of the Contract, Owner may not require Contractor to retain any Subcontractor or Supplier to furnish or perform any of the Work against which Contractor has reasonable objection.

D. Prior to entry into any binding subcontract or purchase order, Contractor shall submit to Owner the identity of the proposed Subcontractor or Supplier (unless Owner has already deemed such proposed Subcontractor or Supplier acceptable during the bidding process or otherwise). Such proposed Subcontractor or Supplier shall be deemed acceptable to Owner unless Owner raises a substantive, reasonable objection within 5 days.

E. Owner may require the replacement of any Subcontractor or Supplier. Owner also may require Contractor to retain specific replacements; provided, however, that Owner may not require a replacement to which Contractor has a reasonable objection. If Contractor has submitted the identity of certain Subcontractors or Suppliers for acceptance by Owner, and Owner has accepted it (either in writing or by failing to make written objection thereto), then Owner may subsequently revoke the acceptance of any such Subcontractor or Supplier so identified solely on the basis of substantive, reasonable objection after due investigation. Contractor shall submit an acceptable replacement for the rejected Subcontractor or Supplier.

F. If Owner requires the replacement of any Subcontractor or Supplier retained by Contractor to perform any part of the Work, then Contractor shall be entitled to an adjustment in Contract Price or Contract Times, with respect to the replacement; and Contractor shall initiate a Change Proposal for such adjustment within 30 days of Owner's requirement of replacement.

G. No acceptance by Owner of any such Subcontractor or Supplier, whether initially or as a replacement, will constitute a waiver of the right of Owner to the completion of the Work in accordance with the Contract Documents.

H. On a monthly basis, Contractor shall submit to Engineer a complete list of all Subcontractors and Suppliers having a direct contract with Contractor, and of all other Subcontractors and Suppliers known to Contractor at the time of submittal.

I. Contractor shall be solely responsible for scheduling and coordinating the work of Subcontractors and Suppliers.

J. The divisions and sections of the Specifications and the identifications of any Drawings do not control Contractor in dividing the Work among Subcontractors or Suppliers, or in delineating the Work to be performed by any specific trade.

This document is a MODIFIED version of EJCDC® C-700, Standard General Conditions of the Construction Contract. Copyright© 2018 National Society of Professional Engineers, American Council of Engineering Companies, and American Society of Civil Engineers. All rights reserved.

K. All Work performed for Contractor by a Subcontractor or Supplier must be pursuant to an appropriate contractual agreement that specifically binds the Subcontractor or Supplier to the applicable terms and conditions of the Contract for the benefit of Owner and Engineer.

L. Owner may furnish to any Subcontractor or Supplier, to the extent practicable, information about amounts paid to Contractor for Work performed for Contractor by the Subcontractor or Supplier.

M. Contractor shall restrict all Subcontractors and Suppliers from communicating with Engineer or Owner, except through Contractor or in case of an emergency, or as otherwise expressly allowed in this Contract.

7.08 *Patent Fees and Royalties*

A. Contractor shall pay all license fees and royalties and assume all costs incident to the use in the performance of the Work or the incorporation in the Work of any invention, design, process, product, or device which is the subject of patent rights or copyrights held by others. If an invention, design, process, product, or device is specified in the Contract Documents for use in the performance of the Work and if, to the actual knowledge of Owner or Engineer, its use is subject to patent rights or copyrights calling for the payment of any license fee or royalty to others, the existence of such rights will be disclosed in the Contract Documents.

B. To the fullest extent permitted by Laws and Regulations, Owner shall indemnify and hold harmless Contractor, and its officers, directors, members, partners, employees, agents, consultants, and subcontractors, from and against all claims, costs, losses, and damages (including but not limited to all fees and charges of engineers, architects, attorneys, and other professionals, and all court or arbitration or other dispute resolution costs) arising out of or relating to any infringement of patent rights or copyrights incident to the use in the performance of the Work or resulting from the incorporation in the Work of any invention, design, process, product, or device specified in the Contract Documents, but not identified as being subject to payment of any license fee or royalty to others required by patent rights or copyrights.

C. To the fullest extent permitted by Laws and Regulations, Contractor shall indemnify and hold harmless Owner and Engineer, and the officers, directors, members, partners, employees, agents, consultants and subcontractors of each and any of them, from and against all claims, costs, losses, and damages (including but not limited to all fees and charges of engineers, architects, attorneys, and other professionals and all court or arbitration or other dispute resolution costs) arising out of or relating to any infringement of patent rights or copyrights incident to the use in the performance of the Work or resulting from the incorporation in the Work of any invention, design, process, product, or device not specified in the Contract Documents.

7.09 *Permits*

A. Unless otherwise provided in the Contract Documents, Contractor shall obtain and pay for all construction permits, licenses, and certificates of occupancy. Owner shall assist Contractor, when necessary, in obtaining such permits and licenses. Contractor shall pay all governmental charges and inspection fees necessary for the prosecution of the Work which are applicable at the time of the submission of Contractor's Bid (or when Contractor became bound under a negotiated contract). Owner shall pay all charges of utility owners for connections for providing permanent service to the Work.

This document is a MODIFIED version of EJCDC® C-700, Standard General Conditions of the Construction Contract. Copyright© 2018 National Society of Professional Engineers, American Council of Engineering Companies, and American Society of Civil Engineers. All rights reserved.

7.10 *Taxes*

A. Contractor shall pay all sales, consumer, use, and other similar taxes required to be paid by Contractor in accordance with the Laws and Regulations of the place of the Project which are applicable during the performance of the Work.

7.11 *Laws and Regulations*

A. Contractor shall give all notices required by and shall comply with all Laws and Regulations applicable to the performance of the Work. Neither Owner nor Engineer shall be responsible for monitoring Contractor's compliance with any Laws or Regulations.

B. If Contractor performs any Work or takes any other action knowing or having reason to know that it is contrary to Laws or Regulations, Contractor shall bear all resulting costs and losses, and shall indemnify and hold harmless Owner and Engineer, and the officers, directors, members, partners, employees, agents, consultants, and subcontractors of each and any of them, from and against all claims, costs, losses, and damages (including but not limited to all fees and charges of engineers, architects, attorneys, and other professionals and all court or arbitration or other dispute resolution costs) arising out of or relating to such Work or other action. It is not Contractor's responsibility to make certain that the Work described in the Contract Documents is in accordance with Laws and Regulations, but this does not relieve Contractor of its obligations under Paragraph 3.03.

C. Owner or Contractor may give written notice to the other party of any changes after the submission of Contractor's Bid (or after the date when Contractor became bound under a negotiated contract) in Laws or Regulations having an effect on the cost or time of performance of the Work, including but not limited to changes in Laws or Regulations having an effect on procuring permits and on sales, use, value-added, consumption, and other similar taxes. If Owner and Contractor are unable to agree on entitlement to or on the amount or extent, if any, of any adjustment in Contract Price or Contract Times resulting from such changes, then within 30 days of such written notice Contractor may submit a Change Proposal, or Owner may initiate a Claim.

7.12 *Record Documents*

A. Contractor shall maintain in a safe place at the Site one printed record copy of all Drawings, Specifications, Addenda, Change Orders, Work Change Directives, Field Orders, written interpretations and clarifications, and approved Shop Drawings. Contractor shall keep such record documents in good order and annotate them to show changes made during construction. These record documents, together with all approved Samples, will be available to Engineer for reference. Upon completion of the Work, Contractor shall deliver these record documents to Engineer.

7.13 *Safety and Protection*

A. Contractor shall be solely responsible for initiating, maintaining, and supervising all safety precautions and programs in connection with the Work. Such responsibility does not relieve Subcontractors of their responsibility for the safety of persons or property in the performance of their work, nor for compliance with applicable safety Laws and Regulations.

B. Contractor shall designate a qualified and experienced safety representative whose duties and responsibilities are the prevention of Work-related accidents and the maintenance and supervision of safety precautions and programs.

C. Contractor shall take all necessary precautions for the safety of, and shall provide the

This document is a MODIFIED version of EJCDC® C-700, Standard General Conditions of the Construction Contract. Copyright© 2018 National Society of Professional Engineers, American Council of Engineering Companies, and American Society of Civil Engineers. All rights reserved.

necessary protection to prevent damage, injury, or loss to:

1. all persons on the Site or who may be affected by the Work;
2. all the Work and materials and equipment to be incorporated therein, whether in storage on or off the Site; and
3. other property at the Site or adjacent thereto, including trees, shrubs, lawns, walks, pavements, roadways, structures, other work in progress, utilities, and Underground Facilities not designated for removal, relocation, or replacement in the course of construction.

D. All damage, injury, or loss to any property referred to in Paragraph 7.13.C.2 or 7.13.C.3 caused, directly or indirectly, in whole or in part, by Contractor, any Subcontractor, Supplier, or any other individual or entity directly or indirectly employed by any of them to perform any of the Work, or anyone for whose acts any of them may be liable, shall be remedied by Contractor at its expense (except damage or loss attributable to the fault of Drawings or Specifications or to the acts or omissions of Owner or Engineer or anyone employed by any of them, or anyone for whose acts any of them may be liable, and not attributable, directly or indirectly, in whole or in part, to the fault or negligence of Contractor or any Subcontractor, Supplier, or other individual or entity directly or indirectly employed by any of them).

E. Contractor shall comply with all applicable Laws and Regulations relating to the safety of persons or property, or to the protection of persons or property from damage, injury, or loss; and shall erect and maintain all necessary safeguards for such safety and protection.

F. Contractor shall notify Owner; the owners of adjacent property; the owners of Underground Facilities and other utilities (if the identity of such owners is known to Contractor); and other contractors and utility owners performing work at or adjacent to the Site, in writing, when Contractor knows that prosecution of the Work may affect them, and shall cooperate with them in the protection, removal, relocation, and replacement of their property or work in progress.

G. Contractor shall comply with the applicable requirements of Owner's safety programs, if any. Any Owner's safety programs that are applicable to the Work are identified or included in the Supplementary Conditions or Specifications.

H. Contractor shall inform Owner and Engineer of the specific requirements of Contractor's safety program with which Owner's and Engineer's employees and representatives must comply while at the Site.

I. Contractor's duties and responsibilities for safety and protection will continue until all the Work is completed, Engineer has issued a written notice to Owner and Contractor in accordance with Paragraph 15.06.C that the Work is acceptable, and Contractor has left the Site (except as otherwise expressly provided in connection with Substantial Completion).

J. Contractor's duties and responsibilities for safety and protection will resume whenever Contractor or any Subcontractor or Supplier returns to the Site to fulfill warranty or correction obligations, or to conduct other tasks arising from the Contract Documents.

7.14 *Hazard Communication Programs*

A. Contractor shall be responsible for coordinating any exchange of safety data sheets (formerly known as material safety data sheets) or other hazard communication information required to be made available to or exchanged between or among employers at the Site in accordance

This document is a MODIFIED version of EJCDC® C-700, Standard General Conditions of the Construction Contract. Copyright© 2018 National Society of Professional Engineers, American Council of Engineering Companies, and American Society of Civil Engineers. All rights reserved.

with Laws or Regulations.

7.15 *Emergencies*

A. In emergencies affecting the safety or protection of persons or the Work or property at the Site or adjacent thereto, Contractor is obligated to act to prevent damage, injury, or loss. Contractor shall give Engineer prompt written notice if Contractor believes that any significant changes in the Work or variations from the Contract Documents have been caused by an emergency, or are required as a result of Contractor's response to an emergency. If Engineer determines that a change in the Contract Documents is required because of an emergency or Contractor's response, a Work Change Directive or Change Order will be issued.

7.16 *Submittals*

A. *Shop Drawing and Sample Requirements*

1. Before submitting a Shop Drawing or Sample, Contractor shall:

a. review and coordinate the Shop Drawing or Sample with other Shop Drawings and Samples and with the requirements of the Work and the Contract Documents;

b. determine and verify:

1) all field measurements, quantities, dimensions, specified performance and design criteria, installation requirements, materials, catalog numbers, and similar information with respect to the Submittal;

2) the suitability of all materials and equipment offered with respect to the indicated application, fabrication, shipping, handling, storage, assembly, and installation pertaining to the performance of the Work; and

3) all information relative to Contractor's responsibilities for means, methods, techniques, sequences, and procedures of construction, and safety precautions and programs incident thereto;

c. confirm that the Submittal is complete with respect to all related data included in the Submittal.

2. Each Shop Drawing or Sample must bear a stamp or specific written certification that Contractor has satisfied Contractor's obligations under the Contract Documents with respect to Contractor's review of that Submittal, and that Contractor approves the Submittal.

3. With each Shop Drawing or Sample, Contractor shall give Engineer specific written notice of any variations that the Submittal may have from the requirements of the Contract Documents. This notice must be set forth in a written communication separate from the Submittal; and, in addition, in the case of a Shop Drawing by a specific notation made on the Shop Drawing itself.

B. *Submittal Procedures for Shop Drawings and Samples*: Contractor shall label and submit Shop Drawings and Samples to Engineer for review and approval in accordance with the accepted Schedule of Submittals.

1. *Shop Drawings*

a. Contractor shall submit the number of copies required in the Specifications.

b. Data shown on the Shop Drawings must be complete with respect to quantities,

This document is a MODIFIED version of EJCDC® C-700, Standard General Conditions of the Construction Contract. Copyright© 2018 National Society of Professional Engineers, American Council of Engineering Companies, and American Society of Civil Engineers. All rights reserved.

dimensions, specified performance and design criteria, materials, and similar data to show Engineer the services, materials, and equipment Contractor proposes to provide, and to enable Engineer to review the information for the limited purposes required by Paragraph 7.16.C.

2. *Samples*

   a. Contractor shall submit the number of Samples required in the Specifications.

   b. Contractor shall clearly identify each Sample as to material, Supplier, pertinent data such as catalog numbers, the use for which intended and other data as Engineer may require to enable Engineer to review the Submittal for the limited purposes required by Paragraph 7.16.C.

3. Where a Shop Drawing or Sample is required by the Contract Documents or the Schedule of Submittals, any related Work performed prior to Engineer's review and approval of the pertinent submittal will be at the sole expense and responsibility of Contractor.

C. *Engineer's Review of Shop Drawings and Samples*

1. Engineer will provide timely review of Shop Drawings and Samples in accordance with the accepted Schedule of Submittals. Engineer's review and approval will be only to determine if the items covered by the Submittals will, after installation or incorporation in the Work, comply with the requirements of the Contract Documents, and be compatible with the design concept of the completed Project as a functioning whole as indicated by the Contract Documents.

2. Engineer's review and approval will not extend to means, methods, techniques, sequences, or procedures of construction, or to safety precautions or programs incident thereto.

3. Engineer's review and approval of a separate item as such will not indicate approval of the assembly in which the item functions.

4. Engineer's review and approval of a Shop Drawing or Sample will not relieve Contractor from responsibility for any variation from the requirements of the Contract Documents unless Contractor has complied with the requirements of Paragraph 7.16.A.3 and Engineer has given written approval of each such variation by specific written notation thereof incorporated in or accompanying the Shop Drawing or Sample. Engineer will document any such approved variation from the requirements of the Contract Documents in a Field Order or other appropriate Contract modification.

5. Engineer's review and approval of a Shop Drawing or Sample will not relieve Contractor from responsibility for complying with the requirements of Paragraphs 7.16.A and B.

6. Engineer's review and approval of a Shop Drawing or Sample, or of a variation from the requirements of the Contract Documents, will not, under any circumstances, change the Contract Times or Contract Price, unless such changes are included in a Change Order.

7. Neither Engineer's receipt, review, acceptance, or approval of a Shop Drawing or Sample will result in such item becoming a Contract Document.

8. Contractor shall perform the Work in compliance with the requirements and commitments set forth in approved Shop Drawings and Samples, subject to the provisions of Paragraph 7.16.C.4.

This document is a MODIFIED version of EJCDC® C-700, Standard General Conditions of the Construction Contract. Copyright© 2018 National Society of Professional Engineers, American Council of Engineering Companies, and American Society of Civil Engineers. All rights reserved.

D. *Resubmittal Procedures for Shop Drawings and Samples*

1. Contractor shall make corrections required by Engineer and shall return the required number of corrected copies of Shop Drawings and submit, as required, new Samples for review and approval. Contractor shall direct specific attention in writing to revisions other than the corrections called for by Engineer on previous Submittals.

2. Contractor shall furnish required Shop Drawing and Sample submittals with sufficient information and accuracy to obtain required approval of an item with no more than two resubmittals. Engineer will record Engineer's time for reviewing a third or subsequent resubmittal of a Shop Drawing or Sample, and Contractor shall be responsible for Engineer's charges to Owner for such time. Owner may impose a set-off against payments due Contractor to secure reimbursement for such charges.

3. If Contractor requests a change of a previously approved Shop Drawing or Sample, Contractor shall be responsible for Engineer's charges to Owner for its review time, and Owner may impose a set-off against payments due Contractor to secure reimbursement for such charges, unless the need for such change is beyond the control of Contractor.

E. *Submittals Other than Shop Drawings, Samples, and Owner-Delegated Designs*

1. The following provisions apply to all Submittals other than Shop Drawings, Samples, and Owner-delegated designs:

   a. Contractor shall submit all such Submittals to the Engineer in accordance with the Schedule of Submittals and pursuant to the applicable terms of the Contract Documents.

   b. Engineer will provide timely review of all such Submittals in accordance with the Schedule of Submittals and return such Submittals with a notation of either Accepted or Not Accepted. Any such Submittal that is not returned within the time established in the Schedule of Submittals will be deemed accepted.

   c. Engineer's review will be only to determine if the Submittal is acceptable under the requirements of the Contract Documents as to general form and content of the Submittal.

   d. If any such Submittal is not accepted, Contractor shall confer with Engineer regarding the reason for the non-acceptance, and resubmit an acceptable document.

2. Procedures for the submittal and acceptance of the Progress Schedule, the Schedule of Submittals, and the Schedule of Values are set forth in Paragraphs 2.03. 2.04, and 2.05.

F. Owner-delegated Designs: Submittals pursuant to Owner-delegated designs are governed by the provisions of Paragraph 7.19.

7.17 *Contractor's General Warranty and Guarantee*

A. Contractor warrants and guarantees to Owner that all Work will be in accordance with the Contract Documents and will not be defective. Engineer is entitled to rely on Contractor's warranty and guarantee.

B. Owner's rights under this warranty and guarantee are in addition to, and are not limited by, Owner's rights under the correction period provisions of Paragraph 15.08. The time in which Owner may enforce its warranty and guarantee rights under this Paragraph 7.17 is limited only by applicable Laws and Regulations restricting actions to enforce such rights; provided,

This document is a MODIFIED version of EJCDC® C-700, Standard General Conditions of the Construction Contract. Copyright© 2018 National Society of Professional Engineers, American Council of Engineering Companies, and American Society of Civil Engineers. All rights reserved.

however, that after the end of the correction period under Paragraph 15.08:

1. Owner shall give Contractor written notice of any defective Work within 60 days of the discovery that such Work is defective; and
2. Such notice will be deemed the start of an event giving rise to a Claim under Paragraph 12.01.B, such that any related Claim must be brought within 30 days of the notice.

C. Contractor's warranty and guarantee hereunder excludes defects or damage caused by:

1. abuse, or improper modification, maintenance, or operation, by persons other than Contractor, Subcontractors, Suppliers, or any other individual or entity for whom Contractor is responsible; or
2. normal wear and tear under normal usage.

D. Contractor's obligation to perform and complete the Work in accordance with the Contract Documents is absolute. None of the following will constitute an acceptance of Work that is not in accordance with the Contract Documents, a release of Contractor's obligation to perform the Work in accordance with the Contract Documents, or a release of Owner's warranty and guarantee rights under this Paragraph 7.17:

1. Observations by Engineer;
2. Recommendation by Engineer or payment by Owner of any progress or final payment;
3. The issuance of a certificate of Substantial Completion by Engineer or any payment related thereto by Owner;
4. Use or occupancy of the Work or any part thereof by Owner;
5. Any review and approval of a Shop Drawing or Sample submittal;
6. The issuance of a notice of acceptability by Engineer;
7. The end of the correction period established in Paragraph 15.08;
8. Any inspection, test, or approval by others; or
9. Any correction of defective Work by Owner.

E. If the Contract requires the Contractor to accept the assignment of a contract entered into by Owner, then the specific warranties, guarantees, and correction obligations contained in the assigned contract will govern with respect to Contractor's performance obligations to Owner for the Work described in the assigned contract.

7.18 *Indemnification*

A. To the fullest extent permitted by Laws and Regulations, and in addition to any other obligations of Contractor under the Contract or otherwise, Contractor shall indemnify and hold harmless Owner and Engineer, and the officers, directors, members, partners, employees, agents, consultants and subcontractors of each and any of them, from losses, damages, costs, and judgments (including but not limited to all fees and charges of engineers, architects, attorneys, and other professionals, and all court or arbitration or other dispute resolution costs) arising from third-party claims or actions relating to or resulting from the performance or furnishing of the Work, provided that any such claim, action, loss, cost, judgment or damage is attributable to bodily injury, sickness, disease, or death, or to damage to or destruction of tangible property (other than the Work itself), including the loss of use

This document is a MODIFIED version of EJCDC® C-700, Standard General Conditions of the Construction Contract. Copyright© 2018 National Society of Professional Engineers, American Council of Engineering Companies, and American Society of Civil Engineers. All rights reserved.

resulting therefrom, but only to the extent caused by any negligent act or omission of Contractor, any Subcontractor, any Supplier, or any individual or entity directly or indirectly employed by any of them to perform any of the Work, or anyone for whose acts any of them may be liable.

B. In any and all claims against Owner or Engineer, or any of their officers, directors, members, partners, employees, agents, consultants, or subcontractors, by any employee (or the survivor or personal representative of such employee) of Contractor, any Subcontractor, any Supplier, or any individual or entity directly or indirectly employed by any of them to perform any of the Work, or anyone for whose acts any of them may be liable, the indemnification obligation under Paragraph 7.18.A will not be limited in any way by any limitation on the amount or type of damages, compensation, or benefits payable by or for Contractor or any such Subcontractor, Supplier, or other individual or entity under workers' compensation acts, disability benefit acts, or other employee benefit acts.

7.19 *Delegation of Professional Design Services*

A. Owner may require Contractor to provide professional design services for a portion of the Work by express delegation in the Contract Documents. Such delegation will specify the performance and design criteria that such services must satisfy, and the Submittals that Contractor must furnish to Engineer with respect to the Owner-delegated design.

B. Contractor shall cause such Owner-delegated professional design services to be provided pursuant to the professional standard of care by a properly licensed design professional, whose signature and seal must appear on all drawings, calculations, specifications, certifications, and Submittals prepared by such design professional. Such design professional must issue all certifications of design required by Laws and Regulations.

C. If a Shop Drawing or other Submittal related to the Owner-delegated design is prepared by Contractor, a Subcontractor, or others for submittal to Engineer, then such Shop Drawing or other Submittal must bear the written approval of Contractor's design professional when submitted by Contractor to Engineer.

D. Owner and Engineer shall be entitled to rely upon the adequacy, accuracy, and completeness of the services, certifications, and approvals performed or provided by the design professionals retained or employed by Contractor under an Owner-delegated design, subject to the professional standard of care and the performance and design criteria stated in the Contract Documents.

E. Pursuant to this Paragraph 7.19, Engineer's review, approval, and other determinations regarding design drawings, calculations, specifications, certifications, and other Submittals furnished by Contractor pursuant to an Owner-delegated design will be only for the following limited purposes:

1. Checking for conformance with the requirements of this Paragraph 7.19;

2. Confirming that Contractor (through its design professionals) has used the performance and design criteria specified in the Contract Documents; and

3. Establishing that the design furnished by Contractor is consistent with the design concept expressed in the Contract Documents.

F. Contractor shall not be responsible for the adequacy of performance or design criteria specified by Owner or Engineer.

This document is a MODIFIED version of EJCDC® C-700, Standard General Conditions of the Construction Contract. Copyright© 2018 National Society of Professional Engineers, American Council of Engineering Companies, and American Society of Civil Engineers. All rights reserved.

G. Contractor is not required to provide professional services in violation of applicable Laws and Regulations.

ARTICLE 8—OTHER WORK AT THE SITE

8.01 *Other Work*

A. In addition to and apart from the Work under the Contract Documents, the Owner may perform other work at or adjacent to the Site. Such other work may be performed by Owner's employees, or through contracts between the Owner and third parties. Owner may also arrange to have third-party utility owners perform work on their utilities and facilities at or adjacent to the Site.

B. If Owner performs other work at or adjacent to the Site with Owner's employees, or through contracts for such other work, then Owner shall give Contractor written notice thereof prior to starting any such other work. If Owner has advance information regarding the start of any third-party utility work that Owner has arranged to take place at or adjacent to the Site, Owner shall provide such information to Contractor.

C. Contractor shall afford proper and safe access to the Site to each contractor that performs such other work, each utility owner performing other work, and Owner, if Owner is performing other work with Owner's employees, and provide a reasonable opportunity for the introduction and storage of materials and equipment and the execution of such other work.

D. Contractor shall do all cutting, fitting, and patching of the Work that may be required to properly connect or otherwise make its several parts come together and properly integrate with such other work. Contractor shall not endanger any work of others by cutting, excavating, or otherwise altering such work; provided, however, that Contractor may cut or alter others' work with the written consent of Engineer and the others whose work will be affected.

E. If the proper execution or results of any part of Contractor's Work depends upon work performed by others, Contractor shall inspect such other work and promptly report to Engineer in writing any delays, defects, or deficiencies in such other work that render it unavailable or unsuitable for the proper execution and results of Contractor's Work. Contractor's failure to so report will constitute an acceptance of such other work as fit and proper for integration with Contractor's Work except for latent defects and deficiencies in such other work.

F. The provisions of this article are not applicable to work that is performed by third-party utilities or other third-party entities without a contract with Owner, or that is performed without having been arranged by Owner. If such work occurs, then any related delay, disruption, or interference incurred by Contractor is governed by the provisions of Paragraph 4.05.C.3.

8.02 *Coordination*

A. If Owner intends to contract with others for the performance of other work at or adjacent to the Site, to perform other work at or adjacent to the Site with Owner's employees, or to arrange to have utility owners perform work at or adjacent to the Site, the following will be set forth in the Supplementary Conditions or provided to Contractor prior to the start of any such other work:

1. The identity of the individual or entity that will have authority and responsibility for

This document is a MODIFIED version of EJCDC® C-700, Standard General Conditions of the Construction Contract. Copyright© 2018 National Society of Professional Engineers, American Council of Engineering Companies, and American Society of Civil Engineers. All rights reserved.

coordination of the activities among the various contractors;

2. An itemization of the specific matters to be covered by such authority and responsibility; and

3. The extent of such authority and responsibilities.

B. Unless otherwise provided in the Supplementary Conditions, Owner shall have sole authority and responsibility for such coordination.

8.03 *Legal Relationships*

A. If, in the course of performing other work for Owner at or adjacent to the Site, the Owner's employees, any other contractor working for Owner, or any utility owner that Owner has arranged to perform work, causes damage to the Work or to the property of Contractor or its Subcontractors, or delays, disrupts, interferes with, or increases the scope or cost of the performance of the Work, through actions or inaction, then Contractor shall be entitled to an equitable adjustment in the Contract Price or the Contract Times. Contractor must submit any Change Proposal seeking an equitable adjustment in the Contract Price or the Contract Times under this paragraph within 30 days of the damaging, delaying, disrupting, or interfering event. The entitlement to, and extent of, any such equitable adjustment will take into account information (if any) regarding such other work that was provided to Contractor in the Contract Documents prior to the submittal of the Bid or the final negotiation of the terms of the Contract, and any remedies available to Contractor under Laws or Regulations concerning utility action or inaction. When applicable, any such equitable adjustment in Contract Price will be conditioned on Contractor assigning to Owner all Contractor's rights against such other contractor or utility owner with respect to the damage, delay, disruption, or interference that is the subject of the adjustment. Contractor's entitlement to an adjustment of the Contract Times or Contract Price is subject to the provisions of Paragraphs 4.05.D and 4.05.E.

B. Contractor shall take reasonable and customary measures to avoid damaging, delaying, disrupting, or interfering with the work of Owner, any other contractor, or any utility owner performing other work at or adjacent to the Site.

1. If Contractor fails to take such measures and as a result damages, delays, disrupts, or interferes with the work of any such other contractor or utility owner, then Owner may impose a set-off against payments due Contractor, and assign to such other contractor or utility owner the Owner's contractual rights against Contractor with respect to the breach of the obligations set forth in this Paragraph 8.03.B.

2. When Owner is performing other work at or adjacent to the Site with Owner's employees, Contractor shall be liable to Owner for damage to such other work, and for the reasonable direct delay, disruption, and interference costs incurred by Owner as a result of Contractor's failure to take reasonable and customary measures with respect to Owner's other work. In response to such damage, delay, disruption, or interference, Owner may impose a set-off against payments due Contractor.

C. If Contractor damages, delays, disrupts, or interferes with the work of any other contractor, or any utility owner performing other work at or adjacent to the Site, through Contractor's failure to take reasonable and customary measures to avoid such impacts, or if any claim arising out of Contractor's actions, inactions, or negligence in performance of the Work at or adjacent to the Site is made by any such other contractor or utility owner against Contractor, Owner, or Engineer, then Contractor shall (1) promptly attempt to settle the claim as to all parties through negotiations with such other contractor or utility owner, or otherwise resolve

This document is a MODIFIED version of EJCDC® C-700, Standard General Conditions of the Construction Contract. Copyright© 2018 National Society of Professional Engineers, American Council of Engineering Companies, and American Society of Civil Engineers. All rights reserved.

the claim by arbitration or other dispute resolution proceeding or at law, and (2) indemnify and hold harmless Owner and Engineer, and the officers, directors, members, partners, employees, agents, consultants and subcontractors of each and any of them from and against any such claims, and against all costs, losses, and damages (including but not limited to all fees and charges of engineers, architects, attorneys, and other professionals and all court or arbitration or other dispute resolution costs) arising out of or relating to such damage, delay, disruption, or interference.

ARTICLE 9—OWNER'S RESPONSIBILITIES

9.01 *Communications to Contractor*

A. Except as otherwise provided in these General Conditions, Owner shall issue all communications to Contractor through Engineer.

9.02 *Replacement of Engineer*

A. Owner may at its discretion appoint an engineer to replace Engineer, provided Contractor makes no reasonable objection to the replacement engineer. The replacement engineer's status under the Contract Documents will be that of the former Engineer.

9.03 *Furnish Data*

A. Owner shall promptly furnish the data required of Owner under the Contract Documents.

9.04 *Pay When Due*

A. Owner shall make payments to Contractor when they are due as provided in the Agreement.

9.05 *Lands and Easements; Reports, Tests, and Drawings*

A. Owner's duties with respect to providing lands and easements are set forth in Paragraph 5.01.

B. Owner's duties with respect to providing engineering surveys to establish reference points are set forth in Paragraph 4.03.

C. Article 5 refers to Owner's identifying and making available to Contractor copies of reports of explorations and tests of conditions at the Site, and drawings of physical conditions relating to existing surface or subsurface structures at the Site.

9.06 *Insurance*

A. Owner's responsibilities, if any, with respect to purchasing and maintaining liability and property insurance are set forth in Article 6.

9.07 *Change Orders*

A. Owner's responsibilities with respect to Change Orders are set forth in Article 11.

9.08 *Inspections, Tests, and Approvals*

A. Owner's responsibility with respect to certain inspections, tests, and approvals is set forth in Paragraph 14.02.B.

9.09 *Limitations on Owner's Responsibilities*

A. The Owner shall not supervise, direct, or have control or authority over, nor be responsible for, Contractor's means, methods, techniques, sequences, or procedures of construction, or the safety precautions and programs incident thereto, or for any failure of Contractor to comply with Laws and Regulations applicable to the performance of the Work. Owner will not

This document is a MODIFIED version of EJCDC® C-700, Standard General Conditions of the Construction Contract. Copyright© 2018 National Society of Professional Engineers, American Council of Engineering Companies, and American Society of Civil Engineers. All rights reserved.

be responsible for Contractor's failure to perform the Work in accordance with the Contract Documents.

9.10 *Undisclosed Hazardous Environmental Condition*

A. Owner's responsibility in respect to an undisclosed Hazardous Environmental Condition is set forth in Paragraph 5.06.

9.11 *Evidence of Financial Arrangements*

A. Upon request of Contractor, Owner shall furnish Contractor reasonable evidence that financial arrangements have been made to satisfy Owner's obligations under the Contract (including obligations under proposed changes in the Work).

9.12 *Safety Programs*

A. While at the Site, Owner's employees and representatives shall comply with the specific applicable requirements of Contractor's safety programs of which Owner has been informed.

B. Owner shall furnish copies of any applicable Owner safety programs to Contractor.

ARTICLE 10—ENGINEER'S STATUS DURING CONSTRUCTION

10.01 *Owner's Representative*

A. Engineer will be Owner's representative during the construction period. The duties and responsibilities and the limitations of authority of Engineer as Owner's representative during construction are set forth in the Contract.

10.02 *Visits to Site*

A. Engineer will make visits to the Site at intervals appropriate to the various stages of construction as Engineer deems necessary in order to observe, as an experienced and qualified design professional, the progress that has been made and the quality of the various aspects of Contractor's executed Work. Based on information obtained during such visits and observations, Engineer, for the benefit of Owner, will determine, in general, if the Work is proceeding in accordance with the Contract Documents. Engineer will not be required to make exhaustive or continuous inspections on the Site to check the quality or quantity of the Work. Engineer's efforts will be directed toward providing for Owner a greater degree of confidence that the completed Work will conform generally to the Contract Documents. On the basis of such visits and observations, Engineer will keep Owner informed of the progress of the Work and will endeavor to guard Owner against defective Work.

B. Engineer's visits and observations are subject to all the limitations on Engineer's authority and responsibility set forth in Paragraph 10.07. Particularly, but without limitation, during or as a result of Engineer's visits or observations of Contractor's Work, Engineer will not supervise, direct, control, or have authority over or be responsible for Contractor's means, methods, techniques, sequences, or procedures of construction, or the safety precautions and programs incident thereto, or for any failure of Contractor to comply with Laws and Regulations applicable to the performance of the Work.

10.03 *Resident Project Representative*

A. If Owner and Engineer have agreed that Engineer will furnish a Resident Project Representative to represent Engineer at the Site and assist Engineer in observing the progress and quality of the Work, then the authority and responsibilities of any such Resident Project Representative will be as provided in the Supplementary Conditions, and limitations on the

This document is a MODIFIED version of EJCDC® C-700, Standard General Conditions of the Construction Contract. Copyright© 2018 National Society of Professional Engineers, American Council of Engineering Companies, and American Society of Civil Engineers. All rights reserved.

responsibilities thereof will be as provided in the Supplementary Conditions and in Paragraph 10.07.

B. If Owner designates an individual or entity who is not Engineer's consultant, agent, or employee to represent Owner at the Site, then the responsibilities and authority of such individual or entity will be as provided in the Supplementary Conditions.

10.04 *Engineer's Authority*

A. Engineer has the authority to reject Work in accordance with Article 14.

B. Engineer's authority as to Submittals is set forth in Paragraph 7.16.

C. Engineer's authority as to design drawings, calculations, specifications, certifications and other Submittals from Contractor in response to Owner's delegation (if any) to Contractor of professional design services, is set forth in Paragraph 7.19.

D. Engineer's authority as to changes in the Work is set forth in Article 11.

E. Engineer's authority as to Applications for Payment is set forth in Article 15.

10.05 *Determinations for Unit Price Work*

A. Engineer will determine the actual quantities and classifications of Unit Price Work performed by Contractor as set forth in Paragraph 13.03.

10.06 *Decisions on Requirements of Contract Documents and Acceptability of Work*

A. Engineer will render decisions regarding the requirements of the Contract Documents, and judge the acceptability of the Work, pursuant to the specific procedures set forth herein for initial interpretations, Change Proposals, and acceptance of the Work. In rendering such decisions and judgments, Engineer will not show partiality to Owner or Contractor, and will not be liable to Owner, Contractor, or others in connection with any proceedings, interpretations, decisions, or judgments conducted or rendered in good faith.

10.07 *Limitations on Engineer's Authority and Responsibilities*

A. Neither Engineer's authority or responsibility under this Article 10 or under any other provision of the Contract, nor any decision made by Engineer in good faith either to exercise or not exercise such authority or responsibility or the undertaking, exercise, or performance of any authority or responsibility by Engineer, will create, impose, or give rise to any duty in contract, tort, or otherwise owed by Engineer to Contractor, any Subcontractor, any Supplier, any other individual or entity, or to any surety for or employee or agent of any of them.

B. Engineer will not supervise, direct, control, or have authority over or be responsible for Contractor's means, methods, techniques, sequences, or procedures of construction, or the safety precautions and programs incident thereto, or for any failure of Contractor to comply with Laws and Regulations applicable to the performance of the Work. Engineer will not be responsible for Contractor's failure to perform the Work in accordance with the Contract Documents.

C. Engineer will not be responsible for the acts or omissions of Contractor or of any Subcontractor, any Supplier, or of any other individual or entity performing any of the Work.

D. Engineer's review of the final Application for Payment and accompanying documentation, and all maintenance and operating instructions, schedules, guarantees, bonds, certificates of inspection, tests and approvals, and other documentation required to be delivered by

This document is a MODIFIED version of EJCDC® C-700, Standard General Conditions of the Construction Contract. Copyright© 2018 National Society of Professional Engineers, American Council of Engineering Companies, and American Society of Civil Engineers. All rights reserved.

Contractor under Paragraph 15.06.A, will only be to determine generally that their content complies with the requirements of, and in the case of certificates of inspections, tests, and approvals, that the results certified indicate compliance with the Contract Documents.

E. The limitations upon authority and responsibility set forth in this Paragraph 10.07 also apply to the Resident Project Representative, if any.

10.08 *Compliance with Safety Program*

A. While at the Site, Engineer's employees and representatives will comply with the specific applicable requirements of Owner's and Contractor's safety programs of which Engineer has been informed.

ARTICLE 11—CHANGES TO THE CONTRACT

11.01 *Amending and Supplementing the Contract*

A. The Contract may be amended or supplemented by a Change Order, a Work Change Directive, or a Field Order.

B. If an amendment or supplement to the Contract includes a change in the Contract Price or the Contract Times, such amendment or supplement must be set forth in a Change Order.

C. All changes to the Contract that involve (1) the performance or acceptability of the Work, (2) the design (as set forth in the Drawings, Specifications, or otherwise), or (3) other engineering or technical matters, must be supported by Engineer's recommendation. Owner and Contractor may amend other terms and conditions of the Contract without the recommendation of the Engineer.

11.02 *Change Orders*

A. Owner and Contractor shall execute appropriate Change Orders covering:

1. Changes in Contract Price or Contract Times which are agreed to by the parties, including any undisputed sum or amount of time for Work actually performed in accordance with a Work Change Directive;

2. Changes in Contract Price resulting from an Owner set-off, unless Contractor has duly contested such set-off;

3. Changes in the Work which are: (a) ordered by Owner pursuant to Paragraph 11.05, (b) required because of Owner's acceptance of defective Work under Paragraph 14.04 or Owner's correction of defective Work under Paragraph 14.07, or (c) agreed to by the parties, subject to the need for Engineer's recommendation if the change in the Work involves the design (as set forth in the Drawings, Specifications, or otherwise) or other engineering or technical matters; and

4. Changes that embody the substance of any final and binding results under: Paragraph 11.03.B, resolving the impact of a Work Change Directive; Paragraph 11.09, concerning Change Proposals; Article 12, Claims; Paragraph 13.02.D, final adjustments resulting from allowances; Paragraph 13.03.D, final adjustments relating to determination of quantities for Unit Price Work; and similar provisions.

B. If Owner or Contractor refuses to execute a Change Order that is required to be executed under the terms of Paragraph 11.02.A, it will be deemed to be of full force and effect, as if fully executed.

This document is a MODIFIED version of EJCDC® C-700, Standard General Conditions of the Construction Contract. Copyright© 2018 National Society of Professional Engineers, American Council of Engineering Companies, and American Society of Civil Engineers. All rights reserved.

11.03 *Work Change Directives*

A. A Work Change Directive will not change the Contract Price or the Contract Times but is evidence that the parties expect that the modification ordered or documented by a Work Change Directive will be incorporated in a subsequently issued Change Order, following negotiations by the parties as to the Work Change Directive's effect, if any, on the Contract Price and Contract Times; or, if negotiations are unsuccessful, by a determination under the terms of the Contract Documents governing adjustments, expressly including Paragraph 11.07 regarding change of Contract Price.

B. If Owner has issued a Work Change Directive and:

1. Contractor believes that an adjustment in Contract Times or Contract Price is necessary, then Contractor shall submit any Change Proposal seeking such an adjustment no later than 30 days after the completion of the Work set out in the Work Change Directive.

2. Owner believes that an adjustment in Contract Times or Contract Price is necessary, then Owner shall submit any Claim seeking such an adjustment no later than 60 days after issuance of the Work Change Directive.

11.04 *Field Orders*

A. Engineer may authorize minor changes in the Work if the changes do not involve an adjustment in the Contract Price or the Contract Times and are compatible with the design concept of the completed Project as a functioning whole as indicated by the Contract Documents. Such changes will be accomplished by a Field Order and will be binding on Owner and also on Contractor, which shall perform the Work involved promptly.

B. If Contractor believes that a Field Order justifies an adjustment in the Contract Price or Contract Times, then before proceeding with the Work at issue, Contractor shall submit a Change Proposal as provided herein.

11.05 *Owner-Authorized Changes in the Work*

A. Without invalidating the Contract and without notice to any surety, Owner may, at any time or from time to time, order additions, deletions, or revisions in the Work. Changes involving the design (as set forth in the Drawings, Specifications, or otherwise) or other engineering or technical matters will be supported by Engineer's recommendation.

B. Such changes in the Work may be accomplished by a Change Order, if Owner and Contractor have agreed as to the effect, if any, of the changes on Contract Times or Contract Price; or by a Work Change Directive. Upon receipt of any such document, Contractor shall promptly proceed with the Work involved; or, in the case of a deletion in the Work, promptly cease construction activities with respect to such deleted Work. Added or revised Work must be performed under the applicable conditions of the Contract Documents.

C. Nothing in this Paragraph 11.05 obligates Contractor to undertake work that Contractor reasonably concludes cannot be performed in a manner consistent with Contractor's safety obligations under the Contract Documents or Laws and Regulations.

11.06 *Unauthorized Changes in the Work*

A. Contractor shall not be entitled to an increase in the Contract Price or an extension of the Contract Times with respect to any work performed that is not required by the Contract Documents, as amended, modified, or supplemented, except in the case of an emergency as provided in Paragraph 7.15 or in the case of uncovering Work as provided in

This document is a MODIFIED version of EJCDC® C-700, Standard General Conditions of the Construction Contract. Copyright© 2018 National Society of Professional Engineers, American Council of Engineering Companies, and American Society of Civil Engineers. All rights reserved.

Paragraph 14.05.C.2.

11.07 *Change of Contract Price*

A. The Contract Price may only be changed by a Change Order. Any Change Proposal for an adjustment in the Contract Price must comply with the provisions of Paragraph 11.09. Any Claim for an adjustment of Contract Price must comply with the provisions of Article 12.

B. An adjustment in the Contract Price will be determined as follows:

1. Where the Work involved is covered by unit prices contained in the Contract Documents, then by application of such unit prices to the quantities of the items involved (subject to the provisions of Paragraph 13.03);

2. Where the Work involved is not covered by unit prices contained in the Contract Documents, then by a mutually agreed lump sum (which may include an allowance for overhead and profit not necessarily in accordance with Paragraph 11.07.C.2); or

3. Where the Work involved is not covered by unit prices contained in the Contract Documents and the parties do not reach mutual agreement to a lump sum, then on the basis of the Cost of the Work (determined as provided in Paragraph 13.01) plus a Contractor's fee for overhead and profit (determined as provided in Paragraph 11.07.C).

C. *Contractor's Fee*: When applicable, the Contractor's fee for overhead and profit will be determined as follows:

1. A mutually acceptable fixed fee; or

2. If a fixed fee is not agreed upon, then a fee based on the following percentages of the various portions of the Cost of the Work:

a. For costs incurred under Paragraphs 13.01.B.1 and 13.01.B.2, the Contractor's fee will be 15 percent;

b. For costs incurred under Paragraph 13.01.B.3, the Contractor's fee will be 5 percent;

c. Where one or more tiers of subcontracts are on the basis of Cost of the Work plus a fee and no fixed fee is agreed upon, the intent of Paragraphs 11.07.C.2.a and 11.07.C.2.b is that the Contractor's fee will be based on: (1) a fee of 15 percent of the costs incurred under Paragraphs 13.01.B.1 and 13.01.B.2 by the Subcontractor that actually performs the Work, at whatever tier, and (2) with respect to Contractor itself and to any Subcontractors of a tier higher than that of the Subcontractor that actually performs the Work, a fee of 5 percent of the amount (fee plus underlying costs incurred) attributable to the next lower tier Subcontractor; provided, however, that for any such subcontracted Work the maximum total fee to be paid by Owner will be no greater than 27 percent of the costs incurred by the Subcontractor that actually performs the Work;

d. No fee will be payable on the basis of costs itemized under Paragraphs 13.01.B.4, 13.01.B.5, and 13.01.C;

e. The amount of credit to be allowed by Contractor to Owner for any change which results in a net decrease in Cost of the Work will be the amount of the actual net decrease in Cost of the Work and a deduction of an additional amount equal to 5 percent of such actual net decrease in Cost of the Work; and

f. When both additions and credits are involved in any one change or Change Proposal,

This document is a MODIFIED version of EJCDC® C-700, Standard General Conditions of the Construction Contract. Copyright© 2018 National Society of Professional Engineers, American Council of Engineering Companies, and American Society of Civil Engineers. All rights reserved.

the adjustment in Contractor's fee will be computed by determining the sum of the costs in each of the cost categories in Paragraph 13.01.B (specifically, payroll costs, Paragraph 13.01.B.1; incorporated materials and equipment costs, Paragraph 13.01.B.2; Subcontract costs, Paragraph 13.01.B.3; special consultants costs, Paragraph 13.01.B.4; and other costs, Paragraph 13.01.B.5) and applying to each such cost category sum the appropriate fee from Paragraphs 11.07.C.2.a through 11.07.C.2.e, inclusive.

11.08 *Change of Contract Times*

A. The Contract Times may only be changed by a Change Order. Any Change Proposal for an adjustment in the Contract Times must comply with the provisions of Paragraph 11.09. Any Claim for an adjustment in the Contract Times must comply with the provisions of Article 12.

B. Delay, disruption, and interference in the Work, and any related changes in Contract Times, are addressed in and governed by Paragraph 4.05.

11.09 *Change Proposals*

A. *Purpose and Content*: Contractor shall submit a Change Proposal to Engineer to request an adjustment in the Contract Times or Contract Price; contest an initial decision by Engineer concerning the requirements of the Contract Documents or relating to the acceptability of the Work under the Contract Documents; challenge a set-off against payment due; or seek other relief under the Contract. The Change Proposal will specify any proposed change in Contract Times or Contract Price, or other proposed relief, and explain the reason for the proposed change, with citations to any governing or applicable provisions of the Contract Documents. Each Change Proposal will address only one issue, or a set of closely related issues.

B. *Change Proposal Procedures*

1. *Submittal*: Contractor shall submit each Change Proposal to Engineer within 30 days after the start of the event giving rise thereto, or after such initial decision.

2. *Supporting Data*: The Contractor shall submit supporting data, including the proposed change in Contract Price or Contract Time (if any), to the Engineer and Owner within 15 days after the submittal of the Change Proposal.

   a. Change Proposals based on or related to delay, interruption, or interference must comply with the provisions of Paragraphs 4.05.D and 4.05.E.

   b. Change proposals related to a change of Contract Price must include full and detailed accounts of materials incorporated into the Work and labor and equipment used for the subject Work.

   The supporting data must be accompanied by a written statement that the supporting data are accurate and complete, and that any requested time or price adjustment is the entire adjustment to which Contractor believes it is entitled as a result of said event.

3. *Engineer's Initial Review*: Engineer will advise Owner regarding the Change Proposal, and consider any comments or response from Owner regarding the Change Proposal. If in its discretion Engineer concludes that additional supporting data is needed before conducting a full review and making a decision regarding the Change Proposal, then Engineer may request that Contractor submit such additional supporting data by a date specified by Engineer, prior to Engineer beginning its full review of the Change Proposal.

This document is a MODIFIED version of EJCDC® C-700, Standard General Conditions of the Construction Contract. Copyright© 2018 National Society of Professional Engineers, American Council of Engineering Companies, and American Society of Civil Engineers. All rights reserved.

4. *Engineer's Full Review and Action on the Change Proposal*: Upon receipt of Contractor's supporting data (including any additional data requested by Engineer), Engineer will conduct a full review of each Change Proposal and, within 30 days after such receipt of the Contractor's supporting data, either approve the Change Proposal in whole, deny it in whole, or approve it in part and deny it in part. Such actions must be in writing, with a copy provided to Owner and Contractor. If Engineer does not take action on the Change Proposal within 30 days, then either Owner or Contractor may at any time thereafter submit a letter to the other party indicating that as a result of Engineer's inaction the Change Proposal is deemed denied, thereby commencing the time for appeal of the denial under Article 12.

5. *Binding Decision*: Engineer's decision is final and binding upon Owner and Contractor, unless Owner or Contractor appeals the decision by filing a Claim under Article 12.

C. *Resolution of Certain Change Proposals*: If the Change Proposal does not involve the design (as set forth in the Drawings, Specifications, or otherwise), the acceptability of the Work, or other engineering or technical matters, then Engineer will notify the parties in writing that the Engineer is unable to resolve the Change Proposal. For purposes of further resolution of such a Change Proposal, such notice will be deemed a denial, and Contractor may choose to seek resolution under the terms of Article 12.

D. *Post-Completion*: Contractor shall not submit any Change Proposals after Engineer issues a written recommendation of final payment pursuant to Paragraph 15.06.B.

11.10 *Notification to Surety*

A. If the provisions of any bond require notice to be given to a surety of any change affecting the general scope of the Work or the provisions of the Contract Documents (including, but not limited to, Contract Price or Contract Times), the giving of any such notice will be Contractor's responsibility. The amount of each applicable bond will be adjusted to reflect the effect of any such change.

ARTICLE 12—CLAIMS

12.01 *Claims*

A. *Claims Process*: The following disputes between Owner and Contractor are subject to the Claims process set forth in this article:

1. Appeals by Owner or Contractor of Engineer's decisions regarding Change Proposals;

2. Owner demands for adjustments in the Contract Price or Contract Times, or other relief under the Contract Documents;

3. Disputes that Engineer has been unable to address because they do not involve the design (as set forth in the Drawings, Specifications, or otherwise), the acceptability of the Work, or other engineering or technical matters; and

4. Subject to the waiver provisions of Paragraph 15.07, any dispute arising after Engineer has issued a written recommendation of final payment pursuant to Paragraph 15.06.B.

B. *Submittal of Claim*: The party submitting a Claim shall deliver it directly to the other party to the Contract promptly (but in no event later than 30 days) after the start of the event giving rise thereto; in the case of appeals regarding Change Proposals within 30 days of the decision under appeal. The party submitting the Claim shall also furnish a copy to the Engineer, for its information only. The responsibility to substantiate a Claim rests with the party making the

This document is a MODIFIED version of EJCDC® C-700, Standard General Conditions of the Construction Contract. Copyright© 2018 National Society of Professional Engineers, American Council of Engineering Companies, and American Society of Civil Engineers. All rights reserved.

Claim. In the case of a Claim by Contractor seeking an increase in the Contract Times or Contract Price, Contractor shall certify that the Claim is made in good faith, that the supporting data are accurate and complete, and that to the best of Contractor's knowledge and belief the amount of time or money requested accurately reflects the full amount to which Contractor is entitled.

C. *Review and Resolution*: The party receiving a Claim shall review it thoroughly, giving full consideration to its merits. The two parties shall seek to resolve the Claim through the exchange of information and direct negotiations. The parties may extend the time for resolving the Claim by mutual agreement. All actions taken on a Claim will be stated in writing and submitted to the other party, with a copy to Engineer.

D. *Mediation*

1. At any time after initiation of a Claim, Owner and Contractor may mutually agree to mediation of the underlying dispute. The agreement to mediate will stay the Claim submittal and response process.

2. If Owner and Contractor agree to mediation, then after 60 days from such agreement, either Owner or Contractor may unilaterally terminate the mediation process, and the Claim submittal and decision process will resume as of the date of the termination. If the mediation proceeds but is unsuccessful in resolving the dispute, the Claim submittal and decision process will resume as of the date of the conclusion of the mediation, as determined by the mediator.

3. Owner and Contractor shall each pay one-half of the mediator's fees and costs.

E. *Partial Approval*: If the party receiving a Claim approves the Claim in part and denies it in part, such action will be final and binding unless within 30 days of such action the other party invokes the procedure set forth in Article 17 for final resolution of disputes.

F. *Denial of Claim*: If efforts to resolve a Claim are not successful, the party receiving the Claim may deny it by giving written notice of denial to the other party. If the receiving party does not take action on the Claim within 90 days, then either Owner or Contractor may at any time thereafter submit a letter to the other party indicating that as a result of the inaction, the Claim is deemed denied, thereby commencing the time for appeal of the denial. A denial of the Claim will be final and binding unless within 30 days of the denial the other party invokes the procedure set forth in Article 17 for the final resolution of disputes.

G. *Final and Binding Results*: If the parties reach a mutual agreement regarding a Claim, whether through approval of the Claim, direct negotiations, mediation, or otherwise; or if a Claim is approved in part and denied in part, or denied in full, and such actions become final and binding; then the results of the agreement or action on the Claim will be incorporated in a Change Order or other written document to the extent they affect the Contract, including the Work, the Contract Times, or the Contract Price.

ARTICLE 13—COST OF THE WORK; ALLOWANCES; UNIT PRICE WORK

13.01 *Cost of the Work*

A. *Purposes for Determination of Cost of the Work*: The term Cost of the Work means the sum of all costs necessary for the proper performance of the Work at issue, as further defined below. The provisions of this Paragraph 13.01 are used for two distinct purposes:

1. To determine Cost of the Work when Cost of the Work is a component of the Contract

This document is a MODIFIED version of EJCDC® C-700, Standard General Conditions of the Construction Contract. Copyright© 2018 National Society of Professional Engineers, American Council of Engineering Companies, and American Society of Civil Engineers. All rights reserved.

Price, under cost-plus-fee, time-and-materials, or other cost-based terms; or

2. When needed to determine the value of a Change Order, Change Proposal, Claim, set-off, or other adjustment in Contract Price. When the value of any such adjustment is determined on the basis of Cost of the Work, Contractor is entitled only to those additional or incremental costs required because of the change in the Work or because of the event giving rise to the adjustment.

B. *Costs Included*: Except as otherwise may be agreed to in writing by Owner, costs included in the Cost of the Work will be in amounts no higher than those commonly incurred in the locality of the Project, will not include any of the costs itemized in Paragraph 13.01.C, and will include only the following items:

1. Payroll costs for employees in the direct employ of Contractor in the performance of the Work under schedules of job classifications agreed upon by Owner and Contractor in advance of the subject Work. Such employees include, without limitation, superintendents, foremen, safety managers, safety representatives, and other personnel employed full time on the Work. Payroll costs for employees not employed full time on the Work will be apportioned on the basis of their time spent on the Work. Payroll costs include, but are not limited to, salaries and wages plus the cost of fringe benefits, which include social security contributions, unemployment, excise, and payroll taxes, workers' compensation, health and retirement benefits, sick leave, and vacation and holiday pay applicable thereto. The expenses of performing Work outside of regular working hours, on Saturday, Sunday, or legal holidays, will be included in the above to the extent authorized by Owner.

2. Cost of all materials and equipment furnished and incorporated in the Work, including costs of transportation and storage thereof, and Suppliers' field services required in connection therewith. All cash discounts accrue to Contractor unless Owner deposits funds with Contractor with which to make payments, in which case the cash discounts will accrue to Owner. All trade discounts, rebates, and refunds and returns from sale of surplus materials and equipment will accrue to Owner, and Contractor shall make provisions so that they may be obtained.

3. Payments made by Contractor to Subcontractors for Work performed by Subcontractors. If required by Owner, Contractor shall obtain competitive bids from subcontractors acceptable to Owner and Contractor and shall deliver such bids to Owner, which will then determine, with the advice of Engineer, which bids, if any, will be acceptable. If any subcontract provides that the Subcontractor is to be paid on the basis of Cost of the Work plus a fee, the Subcontractor's Cost of the Work and fee will be determined in the same manner as Contractor's Cost of the Work and fee as provided in this Paragraph 13.01.

4. Costs of special consultants (including but not limited to engineers, architects, testing laboratories, surveyors, attorneys, and accountants) employed or retained for services specifically related to the Work.

5. Other costs consisting of the following:

   a. The proportion of necessary transportation, travel, and subsistence expenses of Contractor's employees incurred in discharge of duties connected with the Work.

   b. Cost, including transportation and maintenance, of all materials, supplies, equipment, machinery, appliances, office, and temporary facilities at the Site, which are consumed in the performance of the Work, and cost, less market value, of such items

This document is a MODIFIED version of EJCDC® C-700, Standard General Conditions of the Construction Contract. Copyright© 2018 National Society of Professional Engineers, American Council of Engineering Companies, and American Society of Civil Engineers. All rights reserved.

used but not consumed which remain the property of Contractor.

1) In establishing included costs for materials such as scaffolding, plating, or sheeting, consideration will be given to the actual or the estimated life of the material for use on other projects; or rental rates may be established on the basis of purchase or salvage value of such items, whichever is less. Contractor will not be eligible for compensation for such items in an amount that exceeds the purchase cost of such item.

c. *Construction Equipment Rental*

1) Rentals of all construction equipment and machinery, and the parts thereof, in accordance with rental agreements approved by Owner as to price (including any surcharge or special rates applicable to overtime use of the construction equipment or machinery), and the costs of transportation, loading, unloading, assembly, dismantling, and removal thereof. All such costs will be in accordance with the terms of said rental agreements. The rental of any such equipment, machinery, or parts must cease when the use thereof is no longer necessary for the Work.

2) Costs for equipment and machinery owned by Contractor or a Contractor-related entity will be paid at a rate shown for such equipment in the equipment rental rate book specified in the Supplementary Conditions. An hourly rate will be computed by dividing the monthly rates by 176. These computed rates will include all operating costs.

3) With respect to Work that is the result of a Change Order, Change Proposal, Claim, set-off, or other adjustment in Contract Price ("changed Work"), included costs will be based on the time the equipment or machinery is in use on the changed Work and the costs of transportation, loading, unloading, assembly, dismantling, and removal when directly attributable to the changed Work. The cost of any such equipment or machinery, or parts thereof, must cease to accrue when the use thereof is no longer necessary for the changed Work.

d. Sales, consumer, use, and other similar taxes related to the Work, and for which Contractor is liable, as imposed by Laws and Regulations.

e. Deposits lost for causes other than negligence of Contractor, any Subcontractor, or anyone directly or indirectly employed by any of them or for whose acts any of them may be liable, and royalty payments and fees for permits and licenses.

f. Losses and damages (and related expenses) caused by damage to the Work, not compensated by insurance or otherwise, sustained by Contractor in connection with the performance of the Work (except losses and damages within the deductible amounts of builder's risk or other property insurance established in accordance with Paragraph 6.04), provided such losses and damages have resulted from causes other than the negligence of Contractor, any Subcontractor, or anyone directly or indirectly employed by any of them or for whose acts any of them may be liable. Such losses include settlements made with the written consent and approval of Owner. No such losses, damages, and expenses will be included in the Cost of the Work for the purpose of determining Contractor's fee.

g. The cost of utilities, fuel, and sanitary facilities at the Site.

This document is a MODIFIED version of EJCDC® C-700, Standard General Conditions of the Construction Contract. Copyright© 2018 National Society of Professional Engineers, American Council of Engineering Companies, and American Society of Civil Engineers. All rights reserved.

h. Minor expenses such as communication service at the Site, express and courier services, and similar petty cash items in connection with the Work.

i. The costs of premiums for all bonds and insurance that Contractor is required by the Contract Documents to purchase and maintain.

C. *Costs Excluded*: The term Cost of the Work does not include any of the following items:

1. Payroll costs and other compensation of Contractor's officers, executives, principals, general managers, engineers, architects, estimators, attorneys, auditors, accountants, purchasing and contracting agents, expediters, timekeepers, clerks, and other personnel employed by Contractor, whether at the Site or in Contractor's principal or branch office for general administration of the Work and not specifically included in the agreed upon schedule of job classifications referred to in Paragraph 13.01.B.1 or specifically covered by Paragraph 13.01.B.4. The payroll costs and other compensation excluded here are to be considered administrative costs covered by the Contractor's fee.

2. The cost of purchasing, renting, or furnishing small tools and hand tools.

3. Expenses of Contractor's principal and branch offices other than Contractor's office at the Site.

4. Any part of Contractor's capital expenses, including interest on Contractor's capital employed for the Work and charges against Contractor for delinquent payments.

5. Costs due to the negligence of Contractor, any Subcontractor, or anyone directly or indirectly employed by any of them or for whose acts any of them may be liable, including but not limited to, the correction of defective Work, disposal of materials or equipment wrongly supplied, and making good any damage to property.

6. Expenses incurred in preparing and advancing Claims.

7. Other overhead or general expense costs of any kind and the costs of any item not specifically and expressly included in Paragraph 13.01.B.

D. *Contractor's Fee*

1. When the Work as a whole is performed on the basis of cost-plus-a-fee, then:

a. Contractor's fee for the Work set forth in the Contract Documents as of the Effective Date of the Contract will be determined as set forth in the Agreement.

b. for any Work covered by a Change Order, Change Proposal, Claim, set-off, or other adjustment in Contract Price on the basis of Cost of the Work, Contractor's fee will be determined as follows:

1) When the fee for the Work as a whole is a percentage of the Cost of the Work, the fee will automatically adjust as the Cost of the Work changes.

2) When the fee for the Work as a whole is a fixed fee, the fee for any additions or deletions will be determined in accordance with Paragraph 11.07.C.2.

2. When the Work as a whole is performed on the basis of a stipulated sum, or any other basis other than cost-plus-a-fee, then Contractor's fee for any Work covered by a Change Order, Change Proposal, Claim, set-off, or other adjustment in Contract Price on the basis of Cost of the Work will be determined in accordance with Paragraph 11.07.C.2.

E. *Documentation and Audit*: Whenever the Cost of the Work for any purpose is to be

This document is a MODIFIED version of EJCDC® C-700, Standard General Conditions of the Construction Contract. Copyright© 2018 National Society of Professional Engineers, American Council of Engineering Companies, and American Society of Civil Engineers. All rights reserved.

determined pursuant to this Article 13, Contractor and pertinent Subcontractors will establish and maintain records of the costs in accordance with generally accepted accounting practices. Subject to prior written notice, Owner will be afforded reasonable access, during normal business hours, to all Contractor's accounts, records, books, correspondence, instructions, drawings, receipts, vouchers, memoranda, and similar data relating to the Cost of the Work and Contractor's fee. Contractor shall preserve all such documents for a period of three years after the final payment by Owner. Pertinent Subcontractors will afford such access to Owner, and preserve such documents, to the same extent required of Contractor.

13.02 *Allowances*

A. It is understood that Contractor has included in the Contract Price all allowances so named in the Contract Documents and shall cause the Work so covered to be performed for such sums and by such persons or entities as may be acceptable to Owner and Engineer.

B. *Cash Allowances*: Contractor agrees that:

1. the cash allowances include the cost to Contractor (less any applicable trade discounts) of materials and equipment required by the allowances to be delivered at the Site, and all applicable taxes; and

2. Contractor's costs for unloading and handling on the Site, labor, installation, overhead, profit, and other expenses contemplated for the cash allowances have been included in the Contract Price and not in the allowances, and no demand for additional payment for any of the foregoing will be valid.

C. *Owner's Contingency Allowance*: Contractor agrees that an Owner's contingency allowance, if any, is for the sole use of Owner to cover unanticipated costs.

D. Prior to final payment, an appropriate Change Order will be issued as recommended by Engineer to reflect actual amounts due Contractor for Work covered by allowances, and the Contract Price will be correspondingly adjusted.

13.03 *Unit Price Work*

A. Where the Contract Documents provide that all or part of the Work is to be Unit Price Work, initially the Contract Price will be deemed to include for all Unit Price Work an amount equal to the sum of the unit price for each separately identified item of Unit Price Work times the estimated quantity of each item as indicated in the Agreement.

B. The estimated quantities of items of Unit Price Work are not guaranteed and are solely for the purpose of comparison of Bids and determining an initial Contract Price. Payments to Contractor for Unit Price Work will be based on actual quantities.

C. Each unit price will be deemed to include an amount considered by Contractor to be adequate to cover Contractor's overhead and profit for each separately identified item.

D. Engineer will determine the actual quantities and classifications of Unit Price Work performed by Contractor. Engineer will review with Contractor the Engineer's preliminary determinations on such matters before rendering a written decision thereon (by recommendation of an Application for Payment or otherwise). Engineer's written decision thereon will be final and binding (except as modified by Engineer to reflect changed factual conditions or more accurate data) upon Owner and Contractor, and the final adjustment of Contract Price will be set forth in a Change Order, subject to the provisions of the following paragraph.

This document is a MODIFIED version of EJCDC® C-700, Standard General Conditions of the Construction Contract. Copyright© 2018 National Society of Professional Engineers, American Council of Engineering Companies, and American Society of Civil Engineers. All rights reserved.

E. *Adjustments in Unit Price*

1. Contractor or Owner shall be entitled to an adjustment in the unit price with respect to an item of Unit Price Work if:

   a. the quantity of the item of Unit Price Work performed by Contractor differs materially and significantly from the estimated quantity of such item indicated in the Agreement; and

   b. Contractor's unit costs to perform the item of Unit Price Work have changed materially and significantly as a result of the quantity change.

2. The adjustment in unit price will account for and be coordinated with any related changes in quantities of other items of Work, and in Contractor's costs to perform such other Work, such that the resulting overall change in Contract Price is equitable to Owner and Contractor.

3. Adjusted unit prices will apply to all units of that item.

ARTICLE 14—TESTS AND INSPECTIONS; CORRECTION, REMOVAL, OR ACCEPTANCE OF DEFECTIVE WORK

14.01 *Access to Work*

A. Owner, Engineer, their consultants and other representatives and personnel of Owner, independent testing laboratories, and authorities having jurisdiction have access to the Site and the Work at reasonable times for their observation, inspection, and testing. Contractor shall provide them proper and safe conditions for such access and advise them of Contractor's safety procedures and programs so that they may comply with such procedures and programs as applicable.

14.02 *Tests, Inspections, and Approvals*

A. Contractor shall give Engineer timely notice of readiness of the Work (or specific parts thereof) for all required inspections and tests, and shall cooperate with inspection and testing personnel to facilitate required inspections and tests.

B. Owner shall retain and pay for the services of an independent inspector, testing laboratory, or other qualified individual or entity to perform all inspections and tests expressly required by the Contract Documents to be furnished and paid for by Owner, except that costs incurred in connection with tests or inspections of covered Work will be governed by the provisions of Paragraph 14.05.

C. If Laws or Regulations of any public body having jurisdiction require any Work (or part thereof) specifically to be inspected, tested, or approved by an employee or other representative of such public body, Contractor shall assume full responsibility for arranging and obtaining such inspections, tests, or approvals, pay all costs in connection therewith, and furnish Engineer the required certificates of inspection or approval.

D. Contractor shall be responsible for arranging, obtaining, and paying for all inspections and tests required:

1. by the Contract Documents, unless the Contract Documents expressly allocate responsibility for a specific inspection or test to Owner;

2. to attain Owner's and Engineer's acceptance of materials or equipment to be incorporated in the Work;

This document is a MODIFIED version of EJCDC® C-700, Standard General Conditions of the Construction Contract. Copyright© 2018 National Society of Professional Engineers, American Council of Engineering Companies, and American Society of Civil Engineers. All rights reserved.

3. by manufacturers of equipment furnished under the Contract Documents;
4. for testing, adjusting, and balancing of mechanical, electrical, and other equipment to be incorporated into the Work; and
5. for acceptance of materials, mix designs, or equipment submitted for approval prior to Contractor's purchase thereof for incorporation in the Work.

Such inspections and tests will be performed by independent inspectors, testing laboratories, or other qualified individuals or entities acceptable to Owner and Engineer.

E. If the Contract Documents require the Work (or part thereof) to be approved by Owner, Engineer, or another designated individual or entity, then Contractor shall assume full responsibility for arranging and obtaining such approvals.

F. If any Work (or the work of others) that is to be inspected, tested, or approved is covered by Contractor without written concurrence of Engineer, Contractor shall, if requested by Engineer, uncover such Work for observation. Such uncovering will be at Contractor's expense unless Contractor had given Engineer timely notice of Contractor's intention to cover the same and Engineer had not acted with reasonable promptness in response to such notice.

14.03 *Defective Work*

A. *Contractor's Obligation*: It is Contractor's obligation to assure that the Work is not defective.

B. *Engineer's Authority*: Engineer has the authority to determine whether Work is defective, and to reject defective Work.

C. *Notice of Defects*: Prompt written notice of all defective Work of which Owner or Engineer has actual knowledge will be given to Contractor.

D. *Correction, or Removal and Replacement*: Promptly after receipt of written notice of defective Work, Contractor shall correct all such defective Work, whether or not fabricated, installed, or completed, or, if Engineer has rejected the defective Work, remove it from the Project and replace it with Work that is not defective.

E. *Preservation of Warranties*: When correcting defective Work, Contractor shall take no action that would void or otherwise impair Owner's special warranty and guarantee, if any, on said Work.

F. *Costs and Damages*: In addition to its correction, removal, and replacement obligations with respect to defective Work, Contractor shall pay all claims, costs, losses, and damages arising out of or relating to defective Work, including but not limited to the cost of the inspection, testing, correction, removal, replacement, or reconstruction of such defective Work, fines levied against Owner by governmental authorities because the Work is defective, and the costs of repair or replacement of work of others resulting from defective Work. Prior to final payment, if Owner and Contractor are unable to agree as to the measure of such claims, costs, losses, and damages resulting from defective Work, then Owner may impose a reasonable set-off against payments due under Article 15.

14.04 *Acceptance of Defective Work*

A. If, instead of requiring correction or removal and replacement of defective Work, Owner prefers to accept it, Owner may do so (subject, if such acceptance occurs prior to final payment, to Engineer's confirmation that such acceptance is in general accord with the design intent and applicable engineering principles, and will not endanger public safety). Contractor

This document is a MODIFIED version of EJCDC® C-700, Standard General Conditions of the Construction Contract. Copyright© 2018 National Society of Professional Engineers, American Council of Engineering Companies, and American Society of Civil Engineers. All rights reserved.

shall pay all claims, costs, losses, and damages attributable to Owner's evaluation of and determination to accept such defective Work (such costs to be approved by Engineer as to reasonableness), and for the diminished value of the Work to the extent not otherwise paid by Contractor. If any such acceptance occurs prior to final payment, the necessary revisions in the Contract Documents with respect to the Work will be incorporated in a Change Order. If the parties are unable to agree as to the decrease in the Contract Price, reflecting the diminished value of Work so accepted, then Owner may impose a reasonable set-off against payments due under Article 15. If the acceptance of defective Work occurs after final payment, Contractor shall pay an appropriate amount to Owner.

14.05 *Uncovering Work*

A. Engineer has the authority to require additional inspection or testing of the Work, whether or not the Work is fabricated, installed, or completed.

B. If any Work is covered contrary to the written request of Engineer, then Contractor shall, if requested by Engineer, uncover such Work for Engineer's observation, and then replace the covering, all at Contractor's expense.

C. If Engineer considers it necessary or advisable that covered Work be observed by Engineer or inspected or tested by others, then Contractor, at Engineer's request, shall uncover, expose, or otherwise make available for observation, inspection, or testing as Engineer may require, that portion of the Work in question, and provide all necessary labor, material, and equipment.

1. If it is found that the uncovered Work is defective, Contractor shall be responsible for all claims, costs, losses, and damages arising out of or relating to such uncovering, exposure, observation, inspection, and testing, and of satisfactory replacement or reconstruction (including but not limited to all costs of repair or replacement of work of others); and pending Contractor's full discharge of this responsibility the Owner shall be entitled to impose a reasonable set-off against payments due under Article 15.

2. If the uncovered Work is not found to be defective, Contractor shall be allowed an increase in the Contract Price or an extension of the Contract Times, directly attributable to such uncovering, exposure, observation, inspection, testing, replacement, and reconstruction. If the parties are unable to agree as to the amount or extent thereof, then Contractor may submit a Change Proposal within 30 days of the determination that the Work is not defective.

14.06 *Owner May Stop the Work*

A. If the Work is defective, or Contractor fails to supply sufficient skilled workers or suitable materials or equipment, or fails to perform the Work in such a way that the completed Work will conform to the Contract Documents, then Owner may order Contractor to stop the Work, or any portion thereof, until the cause for such order has been eliminated; however, this right of Owner to stop the Work will not give rise to any duty on the part of Owner to exercise this right for the benefit of Contractor, any Subcontractor, any Supplier, any other individual or entity, or any surety for, or employee or agent of any of them.

14.07 *Owner May Correct Defective Work*

A. If Contractor fails within a reasonable time after written notice from Engineer to correct defective Work, or to remove and replace defective Work as required by Engineer, then Owner may, after 7 days' written notice to Contractor, correct or remedy any such deficiency.

This document is a MODIFIED version of EJCDC® C-700, Standard General Conditions of the Construction Contract. Copyright© 2018 National Society of Professional Engineers, American Council of Engineering Companies, and American Society of Civil Engineers. All rights reserved.

B. In exercising the rights and remedies under this Paragraph 14.07, Owner shall proceed expeditiously. In connection with such corrective or remedial action, Owner may exclude Contractor from all or part of the Site, take possession of all or part of the Work and suspend Contractor's services related thereto, and incorporate in the Work all materials and equipment stored at the Site or for which Owner has paid Contractor but which are stored elsewhere. Contractor shall allow Owner, Owner's representatives, agents and employees, Owner's other contractors, and Engineer and Engineer's consultants access to the Site to enable Owner to exercise the rights and remedies under this paragraph.

C. All claims, costs, losses, and damages incurred or sustained by Owner in exercising the rights and remedies under this Paragraph 14.07 will be charged against Contractor as set-offs against payments due under Article 15. Such claims, costs, losses and damages will include but not be limited to all costs of repair, or replacement of work of others destroyed or damaged by correction, removal, or replacement of Contractor's defective Work.

D. Contractor shall not be allowed an extension of the Contract Times because of any delay in the performance of the Work attributable to the exercise by Owner of Owner's rights and remedies under this Paragraph 14.07.

ARTICLE 15—PAYMENTS TO CONTRACTOR; SET-OFFS; COMPLETION; CORRECTION PERIOD

15.01 *Progress Payments*

A. *Basis for Progress Payments*: The Schedule of Values established as provided in Article 2 will serve as the basis for progress payments and will be incorporated into a form of Application for Payment acceptable to Engineer. Progress payments for Unit Price Work will be based on the number of units completed during the pay period, as determined under the provisions of Paragraph 13.03. Progress payments for cost-based Work will be based on Cost of the Work completed by Contractor during the pay period.

B. *Applications for Payments*

1. At least 20 days before the date established in the Agreement for each progress payment (but not more often than once a month), Contractor shall submit to Engineer for review an Application for Payment filled out and signed by Contractor covering the Work completed as of the date of the Application and accompanied by such supporting documentation as is required by the Contract Documents.

2. If payment is requested on the basis of materials and equipment not incorporated in the Work but delivered and suitably stored at the Site or at another location agreed to in writing, the Application for Payment must also be accompanied by: (a) a bill of sale, invoice, copies of subcontract or purchase order payments, or other documentation establishing full payment by Contractor for the materials and equipment; (b) at Owner's request, documentation warranting that Owner has received the materials and equipment free and clear of all Liens; and (c) evidence that the materials and equipment are covered by appropriate property insurance, a warehouse bond, or other arrangements to protect Owner's interest therein, all of which must be satisfactory to Owner.

3. Beginning with the second Application for Payment, each Application must include an affidavit of Contractor stating that all previous progress payments received by Contractor have been applied to discharge Contractor's legitimate obligations associated with prior Applications for Payment.

This document is a MODIFIED version of EJCDC® C-700, Standard General Conditions of the Construction Contract. Copyright© 2018 National Society of Professional Engineers, American Council of Engineering Companies, and American Society of Civil Engineers. All rights reserved.

4. The amount of retainage with respect to progress payments will be as stipulated in the Agreement.

C. *Review of Applications*

1. Engineer will, within 10 days after receipt of each Application for Payment, including each resubmittal, either indicate in writing a recommendation of payment and present the Application to Owner, or return the Application to Contractor indicating in writing Engineer's reasons for refusing to recommend payment. In the latter case, Contractor may make the necessary corrections and resubmit the Application.

2. Engineer's recommendation of any payment requested in an Application for Payment will constitute a representation by Engineer to Owner, based on Engineer's observations of the executed Work as an experienced and qualified design professional, and on Engineer's review of the Application for Payment and the accompanying data and schedules, that to the best of Engineer's knowledge, information and belief:

   a. the Work has progressed to the point indicated;

   b. the quality of the Work is generally in accordance with the Contract Documents (subject to an evaluation of the Work as a functioning whole prior to or upon Substantial Completion, the results of any subsequent tests called for in the Contract Documents, a final determination of quantities and classifications for Unit Price Work under Paragraph 13.03, and any other qualifications stated in the recommendation); and

   c. the conditions precedent to Contractor's being entitled to such payment appear to have been fulfilled in so far as it is Engineer's responsibility to observe the Work.

3. By recommending any such payment Engineer will not thereby be deemed to have represented that:

   a. inspections made to check the quality or the quantity of the Work as it has been performed have been exhaustive, extended to every aspect of the Work in progress, or involved detailed inspections of the Work beyond the responsibilities specifically assigned to Engineer in the Contract; or

   b. there may not be other matters or issues between the parties that might entitle Contractor to be paid additionally by Owner or entitle Owner to withhold payment to Contractor.

4. Neither Engineer's review of Contractor's Work for the purposes of recommending payments nor Engineer's recommendation of any payment, including final payment, will impose responsibility on Engineer:

   a. to supervise, direct, or control the Work;

   b. for the means, methods, techniques, sequences, or procedures of construction, or the safety precautions and programs incident thereto;

   c. for Contractor's failure to comply with Laws and Regulations applicable to Contractor's performance of the Work;

   d. to make any examination to ascertain how or for what purposes Contractor has used the money paid by Owner; or

   e. to determine that title to any of the Work, materials, or equipment has passed to

This document is a MODIFIED version of EJCDC® C-700, Standard General Conditions of the Construction Contract. Copyright© 2018 National Society of Professional Engineers, American Council of Engineering Companies, and American Society of Civil Engineers. All rights reserved.

Owner free and clear of any Liens.

5. Engineer may refuse to recommend the whole or any part of any payment if, in Engineer's opinion, it would be incorrect to make the representations to Owner stated in Paragraph 15.01.C.2.

6. Engineer will recommend reductions in payment (set-offs) necessary in Engineer's opinion to protect Owner from loss because:

   a. the Work is defective, requiring correction or replacement;

   b. the Contract Price has been reduced by Change Orders;

   c. Owner has been required to correct defective Work in accordance with Paragraph 14.07, or has accepted defective Work pursuant to Paragraph 14.04;

   d. Owner has been required to remove or remediate a Hazardous Environmental Condition for which Contractor is responsible; or

   e. Engineer has actual knowledge of the occurrence of any of the events that would constitute a default by Contractor and therefore justify termination for cause under the Contract Documents.

D. *Payment Becomes Due*

1. Ten days after presentation of the Application for Payment to Owner with Engineer's recommendation, the amount recommended (subject to any Owner set-offs) will become due, and when due will be paid by Owner to Contractor.

E. *Reductions in Payment by Owner*

1. In addition to any reductions in payment (set-offs) recommended by Engineer, Owner is entitled to impose a set-off against payment based on any of the following:

   a. Claims have been made against Owner based on Contractor's conduct in the performance or furnishing of the Work, or Owner has incurred costs, losses, or damages resulting from Contractor's conduct in the performance or furnishing of the Work, including but not limited to claims, costs, losses, or damages from workplace injuries, adjacent property damage, non-compliance with Laws and Regulations, and patent infringement;

   b. Contractor has failed to take reasonable and customary measures to avoid damage, delay, disruption, and interference with other work at or adjacent to the Site;

   c. Contractor has failed to provide and maintain required bonds or insurance;

   d. Owner has been required to remove or remediate a Hazardous Environmental Condition for which Contractor is responsible;

   e. Owner has incurred extra charges or engineering costs related to submittal reviews, evaluations of proposed substitutes, tests and inspections, or return visits to manufacturing or assembly facilities;

   f. The Work is defective, requiring correction or replacement;

   g. Owner has been required to correct defective Work in accordance with Paragraph 14.07, or has accepted defective Work pursuant to Paragraph 14.04;

   h. The Contract Price has been reduced by Change Orders;

This document is a MODIFIED version of EJCDC® C-700, Standard General Conditions of the Construction Contract. Copyright© 2018 National Society of Professional Engineers, American Council of Engineering Companies, and American Society of Civil Engineers. All rights reserved.

i. An event has occurred that would constitute a default by Contractor and therefore justify a termination for cause;

j. Liquidated or other damages have accrued as a result of Contractor's failure to achieve Milestones, Substantial Completion, or final completion of the Work;

k. Liens have been filed in connection with the Work, except where Contractor has delivered a specific bond satisfactory to Owner to secure the satisfaction and discharge of such Liens; or

l. Other items entitle Owner to a set-off against the amount recommended.

2. If Owner imposes any set-off against payment, whether based on its own knowledge or on the written recommendations of Engineer, Owner will give Contractor immediate written notice (with a copy to Engineer) stating the reasons for such action and the specific amount of the reduction, and promptly pay Contractor any amount remaining after deduction of the amount so withheld. Owner shall promptly pay Contractor the amount so withheld, or any adjustment thereto agreed to by Owner and Contractor, if Contractor remedies the reasons for such action. The reduction imposed will be binding on Contractor unless it duly submits a Change Proposal contesting the reduction.

3. Upon a subsequent determination that Owner's refusal of payment was not justified, the amount wrongfully withheld will be treated as an amount due as determined by Paragraph 15.01.D.1 and subject to interest as provided in the Agreement.

15.02 *Contractor's Warranty of Title*

A. Contractor warrants and guarantees that title to all Work, materials, and equipment furnished under the Contract will pass to Owner free and clear of (1) all Liens and other title defects, and (2) all patent, licensing, copyright, or royalty obligations, no later than 7 days after the time of payment by Owner.

15.03 *Substantial Completion*

A. When Contractor considers the entire Work ready for its intended use Contractor shall notify Owner and Engineer in writing that the entire Work is substantially complete and request that Engineer issue a certificate of Substantial Completion. Contractor shall at the same time submit to Owner and Engineer an initial draft of punch list items to be completed or corrected before final payment.

B. Promptly after Contractor's notification, Owner, Contractor, and Engineer shall make an inspection of the Work to determine the status of completion. If Engineer does not consider the Work substantially complete, Engineer will notify Contractor in writing giving the reasons therefor.

C. If Engineer considers the Work substantially complete, Engineer will deliver to Owner a preliminary certificate of Substantial Completion which will fix the date of Substantial Completion. Engineer shall attach to the certificate a punch list of items to be completed or corrected before final payment. Owner shall have 7 days after receipt of the preliminary certificate during which to make written objection to Engineer as to any provisions of the certificate or attached punch list. If, after considering the objections to the provisions of the preliminary certificate, Engineer concludes that the Work is not substantially complete, Engineer will, within 14 days after submission of the preliminary certificate to Owner, notify Contractor in writing that the Work is not substantially complete, stating the reasons therefor. If Owner does not object to the provisions of the certificate, or if despite consideration of

This document is a MODIFIED version of EJCDC® C-700, Standard General Conditions of the Construction Contract. Copyright© 2018 National Society of Professional Engineers, American Council of Engineering Companies, and American Society of Civil Engineers. All rights reserved.

Owner's objections Engineer concludes that the Work is substantially complete, then Engineer will, within said 14 days, execute and deliver to Owner and Contractor a final certificate of Substantial Completion (with a revised punch list of items to be completed or corrected) reflecting such changes from the preliminary certificate as Engineer believes justified after consideration of any objections from Owner.

D. At the time of receipt of the preliminary certificate of Substantial Completion, Owner and Contractor will confer regarding Owner's use or occupancy of the Work following Substantial Completion, review the builder's risk insurance policy with respect to the end of the builder's risk coverage, and confirm the transition to coverage of the Work under a permanent property insurance policy held by Owner. Unless Owner and Contractor agree otherwise in writing, Owner shall bear responsibility for security, operation, protection of the Work, property insurance, maintenance, heat, and utilities upon Owner's use or occupancy of the Work.

E. After Substantial Completion the Contractor shall promptly begin work on the punch list of items to be completed or corrected prior to final payment. In appropriate cases Contractor may submit monthly Applications for Payment for completed punch list items, following the progress payment procedures set forth above.

F. Owner shall have the right to exclude Contractor from the Site after the date of Substantial Completion subject to allowing Contractor reasonable access to remove its property and complete or correct items on the punch list.

15.04 *Partial Use or Occupancy*

A. Prior to Substantial Completion of all the Work, Owner may use or occupy any substantially completed part of the Work which has specifically been identified in the Contract Documents, or which Owner, Engineer, and Contractor agree constitutes a separately functioning and usable part of the Work that can be used by Owner for its intended purpose without significant interference with Contractor's performance of the remainder of the Work, subject to the following conditions:

1. At any time, Owner may request in writing that Contractor permit Owner to use or occupy any such part of the Work that Owner believes to be substantially complete. If and when Contractor agrees that such part of the Work is substantially complete, Contractor, Owner, and Engineer will follow the procedures of Paragraph 15.03.A through 15.03.E for that part of the Work.

2. At any time, Contractor may notify Owner and Engineer in writing that Contractor considers any such part of the Work substantially complete and request Engineer to issue a certificate of Substantial Completion for that part of the Work.

3. Within a reasonable time after either such request, Owner, Contractor, and Engineer shall make an inspection of that part of the Work to determine its status of completion. If Engineer does not consider that part of the Work to be substantially complete, Engineer will notify Owner and Contractor in writing giving the reasons therefor. If Engineer considers that part of the Work to be substantially complete, the provisions of Paragraph 15.03 will apply with respect to certification of Substantial Completion of that part of the Work and the division of responsibility in respect thereof and access thereto.

4. No use or occupancy or separate operation of part of the Work may occur prior to compliance with the requirements of Paragraph 6.04 regarding builder's risk or other property insurance.

This document is a MODIFIED version of EJCDC® C-700, Standard General Conditions of the Construction Contract. Copyright© 2018 National Society of Professional Engineers, American Council of Engineering Companies, and American Society of Civil Engineers. All rights reserved.

15.05 *Final Inspection*

A. Upon written notice from Contractor that the entire Work or an agreed portion thereof is complete, Engineer will promptly make a final inspection with Owner and Contractor and will notify Contractor in writing of all particulars in which this inspection reveals that the Work, or agreed portion thereof, is incomplete or defective. Contractor shall immediately take such measures as are necessary to complete such Work or remedy such deficiencies.

15.06 *Final Payment*

A. *Application for Payment*

1. After Contractor has, in the opinion of Engineer, satisfactorily completed all corrections identified during the final inspection and has delivered, in accordance with the Contract Documents, all maintenance and operating instructions, schedules, guarantees, bonds, certificates or other evidence of insurance, certificates of inspection, annotated record documents (as provided in Paragraph 7.12), and other documents, Contractor may make application for final payment.

2. The final Application for Payment must be accompanied (except as previously delivered) by:

   a. all documentation called for in the Contract Documents;

   b. consent of the surety, if any, to final payment;

   c. satisfactory evidence that all title issues have been resolved such that title to all Work, materials, and equipment has passed to Owner free and clear of any Liens or other title defects, or will so pass upon final payment.

   d. a list of all duly pending Change Proposals and Claims; and

   e. complete and legally effective releases or waivers (satisfactory to Owner) of all Lien rights arising out of the Work, and of Liens filed in connection with the Work.

3. In lieu of the releases or waivers of Liens specified in Paragraph 15.06.A.2 and as approved by Owner, Contractor may furnish receipts or releases in full and an affidavit of Contractor that: (a) the releases and receipts include all labor, services, material, and equipment for which a Lien could be filed; and (b) all payrolls, material and equipment bills, and other indebtedness connected with the Work for which Owner might in any way be responsible, or which might in any way result in liens or other burdens on Owner's property, have been paid or otherwise satisfied. If any Subcontractor or Supplier fails to furnish such a release or receipt in full, Contractor may furnish a bond or other collateral satisfactory to Owner to indemnify Owner against any Lien, or Owner at its option may issue joint checks payable to Contractor and specified Subcontractors and Suppliers.

B. *Engineer's Review of Final Application and Recommendation of Payment*: If, on the basis of Engineer's observation of the Work during construction and final inspection, and Engineer's review of the final Application for Payment and accompanying documentation as required by the Contract Documents, Engineer is satisfied that the Work has been completed and Contractor's other obligations under the Contract have been fulfilled, Engineer will, within 10 days after receipt of the final Application for Payment, indicate in writing Engineer's recommendation of final payment and present the final Application for Payment to Owner for payment. Such recommendation will account for any set-offs against payment that are necessary in Engineer's opinion to protect Owner from loss for the reasons stated above with

This document is a MODIFIED version of EJCDC® C-700, Standard General Conditions of the Construction Contract. Copyright© 2018 National Society of Professional Engineers, American Council of Engineering Companies, and American Society of Civil Engineers. All rights reserved.

respect to progress payments. Otherwise, Engineer will return the Application for Payment to Contractor, indicating in writing the reasons for refusing to recommend final payment, in which case Contractor shall make the necessary corrections and resubmit the Application for Payment.

C. *Notice of Acceptability*: In support of its recommendation of payment of the final Application for Payment, Engineer will also give written notice to Owner and Contractor that the Work is acceptable, subject to stated limitations in the notice and to the provisions of Paragraph 15.07.

D. *Completion of Work*: The Work is complete (subject to surviving obligations) when it is ready for final payment as established by the Engineer's written recommendation of final payment and issuance of notice of the acceptability of the Work.

E. *Final Payment Becomes Due*: Upon receipt from Engineer of the final Application for Payment and accompanying documentation, Owner shall set off against the amount recommended by Engineer for final payment any further sum to which Owner is entitled, including but not limited to set-offs for liquidated damages and set-offs allowed under the provisions of this Contract with respect to progress payments. Owner shall pay the resulting balance due to Contractor within 30 days of Owner's receipt of the final Application for Payment from Engineer.

15.07 *Waiver of Claims*

A. By making final payment, Owner waives its claim or right to liquidated damages or other damages for late completion by Contractor, except as set forth in an outstanding Claim, appeal under the provisions of Article 17, set-off, or express reservation of rights by Owner. Owner reserves all other claims or rights after final payment.

B. The acceptance of final payment by Contractor will constitute a waiver by Contractor of all claims and rights against Owner other than those pending matters that have been duly submitted as a Claim, or appealed under the provisions of Article 17.

15.08 *Correction Period*

A. If within one year after the date of Substantial Completion (or such longer period of time as may be prescribed by the Supplementary Conditions or the terms of any applicable special guarantee required by the Contract Documents), Owner gives Contractor written notice that any Work has been found to be defective, or that Contractor's repair of any damages to the Site or adjacent areas has been found to be defective, then after receipt of such notice of defect Contractor shall promptly, without cost to Owner and in accordance with Owner's written instructions:

1. correct the defective repairs to the Site or such adjacent areas;
2. correct such defective Work;
3. remove the defective Work from the Project and replace it with Work that is not defective, if the defective Work has been rejected by Owner, and
4. satisfactorily correct or repair or remove and replace any damage to other Work, to the work of others, or to other land or areas resulting from the corrective measures.

B. Owner shall give any such notice of defect within 60 days of the discovery that such Work or repairs is defective. If such notice is given within such 60 days but after the end of the correction period, the notice will be deemed a notice of defective Work under

This document is a MODIFIED version of EJCDC® C-700, Standard General Conditions of the Construction Contract. Copyright© 2018 National Society of Professional Engineers, American Council of Engineering Companies, and American Society of Civil Engineers. All rights reserved.

Paragraph 7.17.B.

C. If, after receipt of a notice of defect within 60 days and within the correction period, Contractor does not promptly comply with the terms of Owner's written instructions, or in an emergency where delay would cause serious risk of loss or damage, Owner may have the defective Work corrected or repaired or may have the rejected Work removed and replaced. Contractor shall pay all costs, losses, and damages (including but not limited to all fees and charges of engineers, architects, attorneys, and other professionals and all court or arbitration or other dispute resolution costs) arising out of or relating to such correction or repair or such removal and replacement (including but not limited to all costs of repair or replacement of work of others). Contractor's failure to pay such costs, losses, and damages within 10 days of invoice from Owner will be deemed the start of an event giving rise to a Claim under Paragraph 12.01.B, such that any related Claim must be brought within 30 days of the failure to pay.

D. In special circumstances where a particular item of equipment is placed in continuous service before Substantial Completion of all the Work, the correction period for that item may start to run from an earlier date if so provided in the Specifications.

E. Where defective Work (and damage to other Work resulting therefrom) has been corrected or removed and replaced under this paragraph, the correction period hereunder with respect to such Work will be extended for an additional period of one year after such correction or removal and replacement has been satisfactorily completed.

F. Contractor's obligations under this paragraph are in addition to all other obligations and warranties. The provisions of this paragraph are not to be construed as a substitute for, or a waiver of, the provisions of any applicable statute of limitation or repose.

ARTICLE 16—SUSPENSION OF WORK AND TERMINATION

16.01 *Owner May Suspend Work*

A. At any time and without cause, Owner may suspend the Work or any portion thereof for a period of not more than 90 consecutive days by written notice to Contractor and Engineer. Such notice will fix the date on which Work will be resumed. Contractor shall resume the Work on the date so fixed. Contractor shall be entitled to an adjustment in the Contract Price or an extension of the Contract Times directly attributable to any such suspension. Any Change Proposal seeking such adjustments must be submitted no later than 30 days after the date fixed for resumption of Work.

16.02 *Owner May Terminate for Cause*

A. The occurrence of any one or more of the following events will constitute a default by Contractor and justify termination for cause:

1. Contractor's persistent failure to perform the Work in accordance with the Contract Documents (including, but not limited to, failure to supply sufficient skilled workers or suitable materials or equipment, or failure to adhere to the Progress Schedule);

2. Failure of Contractor to perform or otherwise to comply with a material term of the Contract Documents;

3. Contractor's disregard of Laws or Regulations of any public body having jurisdiction; or

4. Contractor's repeated disregard of the authority of Owner or Engineer.

This document is a MODIFIED version of EJCDC® C-700, Standard General Conditions of the Construction Contract. Copyright© 2018 National Society of Professional Engineers, American Council of Engineering Companies, and American Society of Civil Engineers. All rights reserved.

B. If one or more of the events identified in Paragraph 16.02.A occurs, then after giving Contractor (and any surety) 10 days' written notice that Owner is considering a declaration that Contractor is in default and termination of the Contract, Owner may proceed to:

1. declare Contractor to be in default, and give Contractor (and any surety) written notice that the Contract is terminated; and

2. enforce the rights available to Owner under any applicable performance bond.

C. Subject to the terms and operation of any applicable performance bond, if Owner has terminated the Contract for cause, Owner may exclude Contractor from the Site, take possession of the Work, incorporate in the Work all materials and equipment stored at the Site or for which Owner has paid Contractor but which are stored elsewhere, and complete the Work as Owner may deem expedient.

D. Owner may not proceed with termination of the Contract under Paragraph 16.02.B if Contractor within 7 days of receipt of notice of intent to terminate begins to correct its failure to perform and proceeds diligently to cure such failure.

E. If Owner proceeds as provided in Paragraph 16.02.B, Contractor shall not be entitled to receive any further payment until the Work is completed. If the unpaid balance of the Contract Price exceeds the cost to complete the Work, including all related claims, costs, losses, and damages (including but not limited to all fees and charges of engineers, architects, attorneys, and other professionals) sustained by Owner, such excess will be paid to Contractor. If the cost to complete the Work including such related claims, costs, losses, and damages exceeds such unpaid balance, Contractor shall pay the difference to Owner. Such claims, costs, losses, and damages incurred by Owner will be reviewed by Engineer as to their reasonableness and, when so approved by Engineer, incorporated in a Change Order. When exercising any rights or remedies under this paragraph, Owner shall not be required to obtain the lowest price for the Work performed.

F. Where Contractor's services have been so terminated by Owner, the termination will not affect any rights or remedies of Owner against Contractor then existing or which may thereafter accrue, or any rights or remedies of Owner against Contractor or any surety under any payment bond or performance bond. Any retention or payment of money due Contractor by Owner will not release Contractor from liability.

G. If and to the extent that Contractor has provided a performance bond under the provisions of Paragraph 6.01.A, the provisions of that bond will govern over any inconsistent provisions of Paragraphs 16.02.B and 16.02.D.

16.03 *Owner May Terminate for Convenience*

A. Upon 7 days' written notice to Contractor and Engineer, Owner may, without cause and without prejudice to any other right or remedy of Owner, terminate the Contract. In such case, Contractor shall be paid for (without duplication of any items):

1. completed and acceptable Work executed in accordance with the Contract Documents prior to the effective date of termination, including fair and reasonable sums for overhead and profit on such Work;

2. expenses sustained prior to the effective date of termination in performing services and furnishing labor, materials, or equipment as required by the Contract Documents in connection with uncompleted Work, plus fair and reasonable sums for overhead and profit on such expenses; and

This document is a MODIFIED version of EJCDC® C-700, Standard General Conditions of the Construction Contract. Copyright© 2018 National Society of Professional Engineers, American Council of Engineering Companies, and American Society of Civil Engineers. All rights reserved.

3. other reasonable expenses directly attributable to termination, including costs incurred to prepare a termination for convenience cost proposal.

B. Contractor shall not be paid for any loss of anticipated profits or revenue, post-termination overhead costs, or other economic loss arising out of or resulting from such termination.

16.04 *Contractor May Stop Work or Terminate*

A. If, through no act or fault of Contractor, (1) the Work is suspended for more than 90 consecutive days by Owner or under an order of court or other public authority, or (2) Engineer fails to act on any Application for Payment within 30 days after it is submitted, or (3) Owner fails for 30 days to pay Contractor any sum finally determined to be due, then Contractor may, upon 7 days' written notice to Owner and Engineer, and provided Owner or Engineer do not remedy such suspension or failure within that time, terminate the contract and recover from Owner payment on the same terms as provided in Paragraph 16.03.

B. In lieu of terminating the Contract and without prejudice to any other right or remedy, if Engineer has failed to act on an Application for Payment within 30 days after it is submitted, or Owner has failed for 30 days to pay Contractor any sum finally determined to be due, Contractor may, 7 days after written notice to Owner and Engineer, stop the Work until payment is made of all such amounts due Contractor, including interest thereon. The provisions of this paragraph are not intended to preclude Contractor from submitting a Change Proposal for an adjustment in Contract Price or Contract Times or otherwise for expenses or damage directly attributable to Contractor's stopping the Work as permitted by this paragraph.

ARTICLE 17—FINAL RESOLUTION OF DISPUTES

17.01 *Methods and Procedures*

A. *Disputes Subject to Final Resolution*: The following disputed matters are subject to final resolution under the provisions of this article:

1. A timely appeal of an approval in part and denial in part of a Claim, or of a denial in full, pursuant to Article 12; and

2. Disputes between Owner and Contractor concerning the Work, or obligations under the Contract Documents, that arise after final payment has been made.

B. *Final Resolution of Disputes*: For any dispute subject to resolution under this article, Owner or Contractor may:

1. elect in writing to invoke the dispute resolution process provided for in the Supplementary Conditions;

2. agree with the other party to submit the dispute to another dispute resolution process; or

3. if no dispute resolution process is provided for in the Supplementary Conditions or mutually agreed to, give written notice to the other party of the intent to submit the dispute to a court of competent jurisdiction.

ARTICLE 18—MISCELLANEOUS

18.01 *Giving Notice*

A. Whenever any provision of the Contract requires the giving of written notice to Owner,

This document is a MODIFIED version of EJCDC® C-700, Standard General Conditions of the Construction Contract. Copyright© 2018 National Society of Professional Engineers, American Council of Engineering Companies, and American Society of Civil Engineers. All rights reserved.

Engineer, or Contractor, it will be deemed to have been validly given only if delivered:

1. in person, by a commercial courier service or otherwise, to the recipient's place of business;
2. by registered or certified mail, postage prepaid, to the recipient's place of business; or
3. by e-mail to the recipient, with the words "Formal Notice" or similar in the e-mail's subject line.

18.02 *Computation of Times*

A. When any period of time is referred to in the Contract by days, it will be computed to exclude the first and include the last day of such period. If the last day of any such period falls on a Saturday or Sunday or on a day made a legal holiday by the law of the applicable jurisdiction, such day will be omitted from the computation.

18.03 *Cumulative Remedies*

A. The duties and obligations imposed by these General Conditions and the rights and remedies available hereunder to the parties hereto are in addition to, and are not to be construed in any way as a limitation of, any rights and remedies available to any or all of them which are otherwise imposed or available by Laws or Regulations, by special warranty or guarantee, or by other provisions of the Contract. The provisions of this paragraph will be as effective as if repeated specifically in the Contract Documents in connection with each particular duty, obligation, right, and remedy to which they apply.

18.04 *Limitation of Damages*

A. With respect to any and all Change Proposals, Claims, disputes subject to final resolution, and other matters at issue, neither Owner nor Engineer, nor any of their officers, directors, members, partners, employees, agents, consultants, or subcontractors, shall be liable to Contractor for any claims, costs, losses, or damages sustained by Contractor on or in connection with any other project or anticipated project.

18.05 *No Waiver*

A. A party's non-enforcement of any provision will not constitute a waiver of that provision, nor will it affect the enforceability of that provision or of the remainder of this Contract.

18.06 *Survival of Obligations*

A. All representations, indemnifications, warranties, and guarantees made in, required by, or given in accordance with the Contract, as well as all continuing obligations indicated in the Contract, will survive final payment, completion, and acceptance of the Work or termination of the Contract or of the services of Contractor.

18.07 *Controlling Law*

A. This Contract is to be governed by the law of the state in which the Project is located.

18.08 *Assignment of Contract*

A. Unless expressly agreed to elsewhere in the Contract, no assignment by a party to this Contract of any rights under or interests in the Contract will be binding on the other party without the written consent of the party sought to be bound; and, specifically but without limitation, money that may become due and money that is due may not be assigned without such consent (except to the extent that the effect of this restriction may be limited by law),

This document is a MODIFIED version of EJCDC® C-700, Standard General Conditions of the Construction Contract. Copyright© 2018 National Society of Professional Engineers, American Council of Engineering Companies, and American Society of Civil Engineers. All rights reserved.

and unless specifically stated to the contrary in any written consent to an assignment, no assignment will release or discharge the assignor from any duty or responsibility under the Contract.

18.09 *Successors and Assigns*

A. Owner and Contractor each binds itself, its successors, assigns, and legal representatives to the other party hereto, its successors, assigns, and legal representatives in respect to all covenants, agreements, and obligations contained in the Contract Documents.

18.10 *Headings*

A. Article and paragraph headings are inserted for convenience only and do not constitute parts of these General Conditions.

This document is a MODIFIED version of EJCDC® C-700, Standard General Conditions of the Construction Contract. Copyright© 2018 National Society of Professional Engineers, American Council of Engineering Companies, and American Society of Civil Engineers. All rights reserved.

SUPPLEMENTARY CONDITIONS OF THE CONSTRUCTION CONTRACT

TABLE OF CONTENTS

		Page
1.01	Defined Terms	1
2.01	Delivery of Performance and Payment Bonds; Evidence of Insurance	2
2.02	Copies of Documents	2
4.04	Progress Schedule	3
4.05	Delays in Contractor's Progress	3
5.02	Use of Site and Other Areas	4
5.03	Subsurface and Physical Conditions	4
5.04	Differing Subsurface or Physical Conditions	5
5.05	Underground Facilities	5
5.06	Hazardous Environmental Conditions at Site	5
6.02	Insurance – General Provisions	6
6.03	Contractor's Insurance	6
6.04	Builder's Risk and Other Property Insurance	11
6.05	Property Losses; Subrogation	13
7.03	Labor; Working Hours	14
7.07	Concerning Subcontractors and Suppliers	14
7.10	[OPTIONAL] Taxes	14
7.12	Record Documents	15
7.13	[OPTIONAL] Safety and Protection	15
7.17	Contractor's General Warranty and Guarantee	15
7.18	Indemnification	15
7.20	Submittals Using Project Management Software	16
8.02	[OPTIONAL] Coordination	16
8.04	Claims Between Contractors	16
10.03	Resident Project Representative	17
11.05	Owner-Authorized Changes in the Work	20
11.09	Change Proposals	20
11.11	Claims	20
13.01	Cost of the Work	21

This document is a MODIFIED version of EJCDC® C-800, Supplementary Conditions of the Construction Contract. Copyright© 2018 National Society of Professional Engineers, American Council of Engineering Companies, and American Society of Civil Engineers. All rights reserved.

13.03 Unit Price Work 21
15.01 Progress Payments 22
15.03 Substantial Completion 22
15.06 Final Payment 22
17.01 Methods and Procedures 22
17.02 Attorney's Fees 23
18.01 Giving Notice 23
18.07 Controlling Law 23

This document is a MODIFIED version of EJCDC® C-800, Supplementary Conditions of the Construction Contract. Copyright© 2018 National Society of Professional Engineers, American Council of Engineering Companies, and American Society of Civil Engineers. All rights reserved.

These Supplementary Conditions amend or supplement EJCDC® C-700, Standard General Conditions of the Construction Contract (2018). The General Conditions remain in full force and effect except as amended.

The terms used in these Supplementary Conditions have the meanings stated in the General Conditions. Additional terms used in these Supplementary Conditions have the meanings stated below, which are applicable to both the singular and plural thereof.

The address system used in these Supplementary Conditions is the same as the address system used in the General Conditions, with the prefix "SC" added – for example, "Paragraph SC-4.05."

ARTICLE 1 – DEFINITIONS AND TERMINOLOGY

1.01 Defined Terms

SC-1.01 Amend Paragraph 1.01.A.22 by adding the following new sentence:

In the event the Owner should not require the services of the Engineer, then the powers, duties, and responsibilities conferred in the Contract Documents to the Engineer shall be construed to be those of the Owner.

SC-1.01 Amend Paragraph 1.01.A.42 by adding the following subparagraphs:

Substantial Completion is further defined as (a) that degree of completion of the Project's operating facilities or systems sufficient to provide the Owner the full time, uninterrupted, continuous beneficial operation of the Work; and (b) all required functional, performance and acceptance or startup testing has been successfully demonstrated for all components, devices, equipment, and instrumentation and control to the satisfaction of the Owner in accordance with the requirements of the Specifications; and (c) all inspections required have been completed and identified conditions corrected. Specific items of Work which shall be completed prior to declaration of Substantial Completion date include, but are not limited to, the following:

1. Conformance with all training services requirements, unless specified for post startup period.
2. Correction of all state, local, and other regulatory agencies defective Work lists.
3. Submittals have been received and approved by the Owner including, but not necessarily limited to, the following:
    a. Draft record documents.
    b. Operation and maintenance manuals, including service and maintenance agreements.
    c. Equipment data forms.
    d. Manufacturers' certificates of proper installation.
    e. Factory test reports.
4. All special accessories have been provided that are required to place each item of equipment in full operation. These special accessory items include, but are not limited to, specified spare parts, test equipment, adequate oil and grease or other lubrication, air filters, light bulbs, fuses, special tools, valve operators, and other expendable items required for startup and operation of the operating facilities or systems as a whole.

This document is a MODIFIED version of EJCDC® C-800, Supplementary Conditions of the Construction Contract. Copyright© 2018 National Society of Professional Engineers, American Council of Engineering Companies, and American Society of Civil Engineers. All rights reserved.

5. All additional warranty or insurance coverage requirements have been provided.

SC-1.01 Amend Paragraph 1.01.A.49 by adding the following new sentence:

Work excludes the equipment, machinery, tools, vehicles, supplies, etc. used by the Contractor to complete the project.

SC-1.01 Add the following to the list of items in Paragraph 1.01.A, as numbered items:

51. *Authorized Representative:* The individual designated by a party to represent it with respect to this Contract, as indicated in the Agreement.
52. *Bonds*: Performance and payment bonds and other instruments of security.
53. *Final Completion*: The time at which the Work is complete, the Engineer has issued the Notice of Acceptability of Work and all deficient items are resolved to the satisfaction of the Owner.
54. *Request for Proposal*: A document which is signed by Engineer and Contractor, which requests a change or changes to the Work.

ARTICLE 2 – PRELIMINARY MATTERS

2.01 Delivery of Performance and Payment Bonds; Evidence of Insurance

SC-2.01 Delete in its entirety Section 2.01 and replace it with the following:

A. *Performance and Payment Bonds*: When Contractor submits their approval of the Agreement to Owner electronically, Contractor shall also electronically submit to Owner the performance bond and payment bond (if the Contract requires Contractor to furnish such bonds).

B. *Evidence of Contractor's Insurance*: When Contractor submits their approval of the Agreement to Owner electronically, Contractor shall also electronically submit to Owner, with copies to each additional insured (as identified in the Contract), the certificates, endorsements, and other evidence of insurance required to be provided by Contractor in accordance with Article 6, except to the extent the Supplementary Conditions expressly establish other dates for delivery of specific insurance policies.

C. *Evidence of Owner's Insurance*: After receipt of electronic approval of the Agreement and electronic submittal of all required bonds and insurance documentation, Owner shall promptly provide an electronic copy to Contractor, with copies to each additional insured (as identified in the Contract), the certificates and other evidence of insurance required to be provided by Owner under Article 6.

2.02 Copies of Documents

SC-2.02 Delete Paragraph 2.02.A and replace it with the following:

A. Owner shall furnish to Contractor 4 copies of conformed Contract Documents incorporating and integrating all Addenda and any amendments negotiated prior to the Effective Date of the Contract and 1 electronic copy in Adobe Acrobat portable document format (PDF). Additional printed copies of the conformed Contract Documents will be furnished upon request at the cost of reproduction.

ARTICLE 4 – COMMENCEMENT AND PROGRESS OF THE WORK

This document is a MODIFIED version of EJCDC® C-800, Supplementary Conditions of the Construction Contract. Copyright© 2018 National Society of Professional Engineers, American Council of Engineering Companies, and American Society of Civil Engineers. All rights reserved.

4.04 *Progress Schedule*

SC-4.04 Add new subparagraphs immediately after Paragraph 4.04.A.1:

a. Contractor shall prepare and provide to Engineer a 4-week look ahead schedule for discussion at each monthly construction progress meeting.

b. Contractor shall update and recalculate every 90 calendar days the master construction schedule that will be submitted to the Engineer for discussion at the next upcoming monthly construction progress meeting.

4.05 *Delays in Contractor's Progress*

SC-4.05 Add new subparagraph immediately after Paragraph 4.05.C.4:

5. Time Extensions for Abnormal Weather Conditions

a. *Procedure:* The procedure for the determination of time extensions for abnormal weather shall be in accordance with the following:

1) The weather experienced at the project site during the contract period must be found to be abnormal, that is, severe weather that occurs beyond the adverse weather anticipated for the project location during any given month.

2) The abnormal weather must actually cause a delay to the completion of the project. The delay must be beyond the control and without the fault or negligence of the Contractor.

3) Abnormal weather delay days must prevent work on critical activities for 50 percent or more of the contractor's scheduled work day.

b. *Schedule:*

1) The following schedule of monthly adverse weather anticipated by the Hampton Roads Planning District Commission (HRPDC) Regional Construction Standards will constitute the baseline for evaluating extensions in time due to abnormal weather. Delays will only be allowed for the amount of lost work days in excess of the following:

Monthly Adverse Weather Anticipated: Based on a 5 Day Work Week in the Hampton Roads Area											
JAN	FEB	MAR	APR	MAY	JUN	JUL	AUG	SEP	OCT	NOV	DEC
6	4	4	3	4	4	4	3	3	3	3	5

2) The Contractor shall anticipate the potential loss of the number of workdays listed above for each calendar month due to weather, and shall schedule the Work accordingly. Any schedules submitted shall include the above number of days each month as lost days. The Owner shall determine, upon examination of submitted evidence, whether or not weather prevented the Contractor from performing Work on the days claimed by the Contractor. The Owner's determination shall be final and binding upon the parties.

c. *Records:* Upon acknowledgment of the Notice to Proceed and continuing throughout the execution of the Work, the Contractor will record the occurrence of adverse weather and resultant impact to normally scheduled work.

d. *Determination of Time Extensions for Abnormal Weather Conditions:* Abnormal

This document is a MODIFIED version of EJCDC® C-800, Supplementary Conditions of the Construction Contract. Copyright© 2018 National Society of Professional Engineers, American Council of Engineering Companies, and American Society of Civil Engineers. All rights reserved.

weather conditions will be determined by taking the total number of documented adverse weather days that actually occurred in a given month, minus the anticipated adverse weather days (from the Schedule provided above). The Contractor will convert any Abnormal Weather delays into calendar days and may request a time extension in accordance with the Contract Documents.

SC-4.05 Delete the last Paragraph in 4.05.E and replace it with the following:

Contractor shall also furnish such additional supporting documentation as Owner or Engineer may require including, where appropriate, a revised progress schedule indicating all the activities affected by the delay, disruption, or interference, and an explanation of the effect of the delay, disruption, or interference on the critical path to completion of the Work within 30 calendar days of the commencement of the delaying, disrupting, or interfering event. Delays not notified will not be considered.

ARTICLE 5 – SITE; SUBSURFACE AND PHYSICAL CONDITIONS; HAZARDOUS ENVIRONMENTAL CONDITIONS

5.02 Use of Site and Other Areas

SC-5.02 Delete Paragraph 5.02.A.2 and replace it with the following:

2. If a damage or injury claim is made by the owner or occupant of any such land or area because of the performance of the Work, or because of other actions or conduct of the Contractor or those for which Contractor is responsible, Contractor shall (a) take immediate corrective or remedial action as required by Paragraph 7.13, or otherwise; (b) inform the Owner in writing of any and all claims within 7 calendar days of notification by third party; (c) promptly attempt to settle the claim within 60 calendar days through negotiations with such owner or occupant, or otherwise resolve the claim by arbitration or other dispute resolution proceeding, or at law; and (d) to the fullest extent permitted by Laws and Regulations, indemnify and hold harmless Owner and Engineer, and the officers, directors, members, partners, employees, agents, consultants and subcontractors of each and any of them from and against any such claim, and against all costs, losses, and damages (including but not limited to all fees and charges of engineers, architects, attorneys, and other professionals and all court or arbitration or other dispute resolution costs) arising out of or relating to any claim or action, legal or equitable, brought by any such owner or occupant against Owner, Engineer, or any other party indemnified hereunder to the extent caused directly or indirectly, in whole or in part by, or based upon, Contractor's performance of the Work, or because of other actions or conduct of the Contractor or those for which Contractor is responsible.

5.03 Subsurface and Physical Conditions

SC-5.03 Add new paragraph immediately after Paragraph 5.03.D:

E. No reports of explorations or tests of subsurface conditions at or adjacent to the Site, or drawings of physical conditions relating to existing surface or subsurface structures at the Site, are known to Owner.

[or]

SC-5.03 Add new paragraph[s] immediately after Paragraph 5.03.D:

E. The following report[s] of explorations and tests of subsurface conditions at or adjacent to the Site are known to Owner:

This document is a MODIFIED version of EJCDC® C-800, Supplementary Conditions of the Construction Contract. Copyright© 2018 National Society of Professional Engineers, American Council of Engineering Companies, and American Society of Civil Engineers. All rights reserved.

1. Report dated [date], prepared by [Engineer Name, City, State], entitled: "[Title]", consisting of [#] pages. The Technical Data contained in such report upon whose accuracy Contractor may rely are [indicate Technical data, or state none]. [or] [those indicated in the definition of Technical Date in the General Conditions].

F. The following drawing[s] of physical conditions relating to existing surface or subsurface structures at or adjacent to the Site (except Underground Facilities) are known to owner:

1. Drawings dated [date], prepared by [Engineer Name, City, State], entitled: "[Title]", consisting of [#] sheets numbered [#] to [#], inclusive.

[Use one of the following two subparagraphs for each set of drawings]

1) All of the information in such drawings constitutes of Technical Data on whose accuracy Contractor may rely, expect for [explain] appearing on Drawing No. [#] and [explain] appearing on Drawing No. [#].

[or]

a) None of the contents of such drawings is Technical Data on whose accuracy Contractor may rely.

5.04 *Differing Subsurface or Physical Conditions*

SC-5.04 Delete Paragraph 5.04.D and replace it with the following:

D. Intentionally Omitted.

5.05 *Underground Facilities*

SC-5.05 Delete Paragraph 5.05.E and replace it with the following:

E. Intentionally Omitted.

SC-5.05 Delete Paragraph 5.05.F.4.c and replace it with the following:

(c) gathered in an investigation conducted by the Engineer. If such information or data is incorrect or incomplete, Contractor's remedies are limited to those set forth in this Paragraph 5.05.F.

5.06 *Hazardous Environmental Conditions at Site*

SC-5.06 Delete in its entirety Paragraph 5.06.A and replace it with the following:

A. No reports or drawings related to Hazardous Environmental Conditions at the Site are known to Owner.

[or]

SC-5.06 Add new subparagraph[s] immediately after Paragraph 5.06.A.3:

4. The following report[s] regarding Hazardous Environmental Conditions at the Site are known to Owner:

a. Report dated [date], prepared by [Engineer Name, City, State], entitled: "[Title]", consisting of [#] pages. The Technical Data contained in such report upon whose accuracy Contractor may rely are [indicate Technical data, or state none].

5. The following drawing[s] regarding Hazardous Environmental Conditions at the Site are known to owner:

This document is a MODIFIED version of EJCDC® C-800, Supplementary Conditions of the Construction Contract. Copyright© 2018 National Society of Professional Engineers, American Council of Engineering Companies, and American Society of Civil Engineers. All rights reserved.

a. Drawings dated [date], prepared by [Engineer Name, City, State], entitled: "[Title]", consisting of [#] sheets numbered [#] to [#], inclusive.

[Use one of the following two subparagraphs for each set of drawings]

1) All of the information in such drawings constitutes of Technical Data on whose accuracy Contractor may rely, expect for [explain] appearing on Drawing No. [#] and [explain] appearing on Drawing No. [#].

[or]

1) None of the contents of such drawings is Technical Data on whose accuracy Contractor may rely.

SC-5.06 Add new paragraph immediately after Paragraph 5.06.K:

L. HRSD is required in accordance with 29 CFR 1910.1200, to inform Contractor personnel that work centers within HRSD have hazardous chemicals on site. HRSD and Contractor personnel may be exposed to these hazardous chemicals while working at HRSD work centers. A written Hazard Communication Program has been developed to inform personnel of the specific hazardous chemicals at the work center and the related safety information including protective measures, special precautions and emergency procedures to be observed. The Hazard Communication Program including Safety Data Sheets for each hazardous chemical at the work center will be reviewed with the Contractor after the Notice to Proceed is issued. It is the responsibility of the Contractor to request a meeting with representatives of HRSD's Safety Division and/or work center staff to review this program prior to beginning any on-site efforts at the work center or centers impacted by this Project. The Contractor is responsible for communicating the information contained in the Hazard Communication Program to their personnel and subcontractors working at the work center.

ARTICLE 6 – BONDS AND INSURANCE

6.02 Insurance – General Provisions

SC-6.02 Add new subparagraph immediately after Paragraph 6.02.B:

1. Contractor may obtain workers' compensation insurance from an insurance company that has not been rated by A.M. Best, provided that such company (a) is domiciled in the state in which the Project is located, (b) is certified or authorized as a workers' compensation insurance provider by the appropriate state agency having jurisdiction, and (c) has been accepted to provide workers' compensation insurance for similar projects by the state within the last 12 months.

6.03 Contractor's Insurance

SC-6.03 Delete in its entirety Section 6.03 and replace it with the following:

A. *Workers' Compensation*: Contractor shall purchase and maintain workers' compensation and employer's liability insurance for:

1. claims under worker's compensation, disability benefits, and other similar employees benefit acts.

2. United States Longshoreman and Harbor Workers' Compensation Act and Jones Act coverage (if applicable).

This document is a MODIFIED version of EJCDC® C-800, Supplementary Conditions of the Construction Contract. Copyright© 2018 National Society of Professional Engineers, American Council of Engineering Companies, and American Society of Civil Engineers. All rights reserved.

3. claims for damages because of bodily injury, occupational sickness or disease, or death of Contractor's employees (by stop-gap endorsement in monopolistic worker's compensation states).
4. Foreign voluntary worker compensation (if applicable).
5. Owner shall be named as an Alternate Employer by endorsement.

B. *Commercial General Liability – Claims Covered*: Contractor shall purchase and maintain commercial general liability insurance, covering all operations by or on behalf of Contractor, on an occurrence basis, against:

1. Claims for damages because of bodily injury, sickness or disease, or death of any person other than Contractor's employees.
2. Claims for damages insured by reasonably available personal or advertising injury liability coverage.
3. Claims for damages, other than to the Work itself, because of injury to or destruction of tangible property wherever located, including loss of use resulting therefrom.
4. Contractual Liability.

C. *Commercial General Liability – Form and Content*: Contractor's commercial liability policy shall be written on a 1996 (or later) Insurance Services Organization, Inc. (ISO) commercial general liability occurrence form (or equivalent) and include the following coverages and endorsements:

1. Products and completed operations coverage:
   a. Such insurance shall be maintained for 3 years after final payment.
   b. Contractor shall furnish Owner and each other additional insured (as identified in the Supplementary Conditions or elsewhere in the Contract) evidence of continuation of such insurance at final payment and 3 years thereafter.
2. Blanket contractual liability coverage, to the extent permitted by Law, including but not limited to coverage of Contractor's contractual indemnity obligations in Paragraph 7.18.
3. Broad form property damage coverage.
4. Severability of interests and no insured-versus-insured or cross-liability exclusions.
5. Personal injury coverage.
6. Additional insured endorsements that include both ongoing operations and products and completed operations coverage through ISO Endorsements CG 20 10 and CG 20 37; or their equivalent.
7. For design professional additional insureds, ISO Endorsement CG 20 32 (latest Edition), "Additional Insured—Engineers, Architects or Surveyors Not Engaged by the Named Insured" or its equivalent.
8. Aggregate Limits will apply per project.

D. *Commercial General Liability – Excluded Content:* The commercial general liability

This document is a MODIFIED version of EJCDC® C-800, Supplementary Conditions of the Construction Contract. Copyright© 2018 National Society of Professional Engineers, American Council of Engineering Companies, and American Society of Civil Engineers. All rights reserved.

insurance policy, including its coverages, endorsements, and incorporated provisions, must not include any of the following:

1. Any modification of the standard definition of "insured contract" (except to delete the railroad protective liability exclusion if Contractor is required to indemnify a railroad or others with respect to Work within 50 feet of railroad property).
2. Any exclusion for water intrusion or water damage.
3. Any provisions resulting in the erosion of insurance limits by defense costs other than those already incorporated in ISO form CG 00 01.
4. Any exclusion of coverage relating to earth subsidence or movement.
5. Any exclusion for the insured's vicarious liability, strict liability, or statutory liability (other than worker's compensation).
6. Any limitation or exclusion based on the nature of Contractor's work.
7. Any professional liability exclusion broader in effect than the most recent edition of ISO form CG 22 79 04 13.

E. *Automobile liability*: Contractor shall purchase and maintain automobile liability insurance against claims for damages because of bodily injury or death of any person or property damage arising out of the ownership, maintenance, or use of any motor vehicle. The automobile liability policy shall be written on an accident basis.

F. *Umbrella or Excess Liability*: Contractor shall purchase and maintain umbrella or excess liability insurance written over the underlying employer's liability, commercial general liability, and automobile liability insurance described in the Paragraphs above. Subject to industry-standard exclusions, the coverage afforded shall follow form as to each and every one of the underlying policies.

G. *Contractor's Pollution Liability Insurance*: Contractor shall purchase and maintain a policy covering third-party injury and property damage claims, including clean-up costs, as a result of pollution conditions arising from Contractor's operations and completed operations. This insurance shall be maintained for no less than 3 years after final completion. If written on a claims made basis the retroactive date will pre-date the commencement of work.

H. *Additional Insureds Ongoing and Completed Operations, and Waiver of Subrogation:* The Contractor's commercial general liability, automobile liability, umbrella or excess, and pollution liability policies shall include and list as additional insureds Owner, Engineer, and any individuals or entities identified as required additional insureds: include coverage for their respective officers, directors, members, partners, employees, agents, consultants, and construction subcontractors or each and any of all such additional insureds; and the insurance afforded to these additional insureds shall provide primary coverage for all claims covered thereby (including as applicable those arising from both ongoing and completed operations) on a non-contributory basis. The Contractor's commercial general liability, automobile liability, umbrella or excess, and workers compensation policies shall include a waiver of subrogation endorsement in favor of the Owner, Engineer, and any individuals or entities identified herein. Contractor shall obtain all necessary endorsement to support these requirements. The additional insureds shall include the following:

This document is a MODIFIED version of EJCDC® C-800, Supplementary Conditions of the Construction Contract. Copyright© 2018 National Society of Professional Engineers, American Council of Engineering Companies, and American Society of Civil Engineers. All rights reserved.

1. Owner: Hampton Roads Sanitation District
   1434 Air Rail Avenue
   Virginia Beach, Virginia 23455
2. Engineer: [NAME]
   [ADDRESS LINE 1]
   [ADDRESS LINE 2]
3. [ADDITIONAL] [NAME]
   [ADDRESS LINE 1]
   [ADDRESS LINE 2]

I. *Contractor's Professional Liability Insurance:* If Contractor will provide or furnish professional services under this Contract, through a delegation of professional design services or otherwise, then Contractor shall be responsible for purchasing and maintaining applicable professional liability insurance. This insurance shall provide protection against claims arising out of performance of professional design or related services, and caused by a negligent error, omission, or act for which the insured party is legally liable. It shall be maintained throughout the duration of the Contract and for a minimum of 3 years after Substantial Completion. If written on a claims made basis the retroactive date will pre-date the commencement of services.

J. *Unmanned Aerial Vehicle Liability Insurance*: If Contractor uses unmanned aerial vehicles (UAV – commonly referred to as drones) at the Site or in support of any aspect of the Work, Contractor shall obtain UAV liability insurance in the amounts stated; name Owner, Engineer, and all individuals and entities identified in the Supplementary Conditions as additional insureds; and provide a certificate to Owner confirming Contractor's compliance with this requirement. Such insurance will provide coverage for property damage, bodily injury or death, and invasion of privacy. Contractor shall ensure any subcontractors using UAV's carry the required liability insurance and provide the same additional insured protections.

K. *General provisions*: The policies of insurance required by this Paragraph 6.03 shall:

1. Include at least the specific coverages provided in this Article.
2. Be written for not less than limits of liability provided in this Article or required by Laws or Regulations, whichever is greater.
3. Contain a provision or endorsement that the coverage afforded will not be canceled, materially changed, or renewal refused until at least 30 calendar days prior written notice has been given to Contractor (10 calendar days Non-Payment). Within 3 calendar days of receipt of any such written notice, Contractor shall provide a copy of the notice to Owner, Engineer, and each other insured under the policy.
4. Remain in effect at least 3 years after final payment and Contractor's departure from the Site (and longer if expressly required elsewhere in this Contract), and at all times thereafter when Contractor may be correcting, removing, or replacing defective Work as a warranty or correction obligation, or otherwise, or returning to the Site to conduct other tasks arising from the Contract Documents.
5. Be appropriate for the Work being performed and provide protection from claims that may arise out of or result from Contractor's performance of the Work and

This document is a MODIFIED version of EJCDC® C-800, Supplementary Conditions of the Construction Contract. Copyright© 2018 National Society of Professional Engineers, American Council of Engineering Companies, and American Society of Civil Engineers. All rights reserved.

Contractor's other obligations under the Contract Documents, whether it is to be performed by Contractor, any Subcontractor or Supplier, or by anyone directly or indirectly employed by any of them to perform any of the Work, or by anyone for whose acts any of them may be liable.

L. The coverage requirements for specific policies of insurance must be met by such policies, and not by reference to excess or umbrella insurance provided in other policies.

M. The limits of liability for the insurance required by Paragraph 6.03 for the Contractor, all subcontractors, and all subconsultants shall provide coverage for not less than the following amounts, or greater where required by Laws and Regulations:

1. Workers' Compensation and Employer's Liability under Paragraph 6.03.A:

State: Virginia	Statutory
Federal, if applicable (e.g., Longshoreman's):	Statutory
Jones Act coverage, if applicable:	
Bodily injury by accident, each accident	$ 1,000,000
Bodily injury by disease, aggregate	$ N/A
Employer's Liability:	
Bodily injury, each accident	$ 100,000
Bodily injury by disease, each employee	$ 100,000
Bodily injury/disease aggregate	$ 500,000
Voluntary Worker Compensation:	Statutory

2. Commercial General Liability under Paragraphs 6.03.B. 6.03.C, and 6.03D:

General Aggregate:	$ 2,000,000
Products – Completed Operations Aggregate:	$ 1,000,000
Personal and Advertising Injury:	$ 1,000,000
Each Occurrence (Bodily Injury and Property Damage):	$ 1,000,000
Damage to Rented Premises (Fire Damage):	$ 100,000
Medical Expenses (Any one person):	$ 5,000

3. Automobile Liability under Paragraph 6.03.E:

Combined Single Limit of:	$ 1,000,000

4. Umbrella or Excess Liability under Paragraph 6.03.F:

Per Occurrence:	$ 5,000,000
General Aggregate:	$ 5,000,000

5. Contractor's Pollution Liability insurance under Paragraph 6.03.G:

Each Claim:	$ 1,000,000

This document is a MODIFIED version of EJCDC® C-800, Supplementary Conditions of the Construction Contract. Copyright© 2018 National Society of Professional Engineers, American Council of Engineering Companies, and American Society of Civil Engineers. All rights reserved.

General Aggregate: $ 1,000,000

6. Contractor's Professional Liability insurance under Paragraph 6.03.I:

   Each Claim: $ 1,000,000

   General Aggregate: $ 1,000,000

7. Unmanned Aerial Vehicle Liability insurance under Paragraph 6.03.J:

   Each Claim: $ 1,000,000

   General Aggregate: $ 1,000,000

8. *Additional Coverages*: In the event the Contractor utilizes a vessel or barge in execution of the contract, all owned and non-owned vessels or barges shall be insured; including crew coverage and contractual liability. Hull insurance shall be carried for the full value of replacement. Owner shall be named as additional insured on all watercraft insurance coverage:

   Protection and Indemnity: $ 1,000,000

   If operations involve the use of owned or non-owned aircraft of watercraft, coverage must be provided for bodily injury and property damage arising out of ownership, maintenance, use, or entrustment, thereof as follows:

   General Aggregate: $ 2,000,000

   Each Occurrence (Bodily Injury and Property Damage): $ 1,000,000

6.04 *Builder's Risk and Other Property Insurance*

SC-6.04 Delete in its entirety Section 6.04 and replace it with the following:

A. **[NOTE: Review with Director and Insurance Consultant if project over $10 million; CS update the DBB Insurance Review spreadsheet] [NOTE: If HRSD supplies equipment/materials and cost is over $100,000 update Builder's Risk to include by a comparable amount]** *Builder's Risk*: Contractor shall purchase and maintain builder's risk insurance upon the Work on a completed value basis for the full Contract Price [plus $## which includes the cost of the **UPDATE**] and including materials, labor, overhead and profit, subject to such deductible amounts described herein. The Contractor shall be responsible for payment of any and all deductibles. Contractor shall have full property insurance coverage in all situations including "Named Storm" events. This builder's risk insurance shall:

   1. Include the Owner and Contractor as named insureds, and Subcontractors of all tiers, and any individuals or entities required by the Supplementary Conditions to be insured under such builder's risk policy, as insureds or named insureds. For purposes of the remainder of this Paragraph 6.04, Paragraphs 6.05 and 6.06 in the General Conditions, and any corresponding Supplementary Conditions, the parties required to be insured shall collectively be referred to as "insureds."

   2. Be written on a builder's risk "all risk" policy form that shall at least include insurance for physical loss or damage to the Work, temporary buildings, falsework, and materials and equipment stored and in transit, and shall insure against at least the following perils or causes of loss: fire; lightning; windstorm;

This document is a MODIFIED version of EJCDC® C-800, Supplementary Conditions of the Construction Contract. Copyright© 2018 National Society of Professional Engineers, American Council of Engineering Companies, and American Society of Civil Engineers. All rights reserved.

hail; riot; civil commotion; terrorism; vehicle impact; aircraft; smoke; theft; vandalism and malicious mischief; mechanical breakdown, boiler explosion, and artificially generated electric current; earthquake; volcanic activity, and other earth movement; flood; collapse; explosion; debris removal; demolition and increased cost of construction occasioned by enforcement of Laws and Regulations; water damage (other than that caused by flood); and such other perils or causes of loss as may be specifically required by the Supplementary Conditions. If insurance against mechanical breakdown, boiler explosion, and artificially generated electric current; earthquake; volcanic activity, and other earth movement; or flood or windstorm, are not commercially available under builder's risk policies, by endorsement or otherwise, such insurance may be provided through other insurance policies acceptable to Owner and Contractor.

3. Cover, as insured property, at least the following: (a) the Work and all materials, supplies, machinery, apparatus, equipment, fixtures, and other property of a similar nature that are to be incorporated into or used in the preparation, fabrication, construction, erection, or completion of the Work, including Owner-furnished or assigned property; (b) spare parts inventory required within the scope of the Contract; and (c) temporary works which are not intended to form part of the permanent constructed Work but which are intended to provide working access to the Site, or to the Work under construction, or which are intended to provide temporary support for the Work under construction, including scaffolding, form work, fences, shoring, falsework, and temporary structures.
4. Cover 12 months of expenses (soft costs) incurred by the Contractor in the repair or replacement of any insured property (including but not limited to fees and charges of engineers, architects, insurance, interest expense, etc.).
5. Extend to cover damage or loss to insured property while in temporary storage at the Site or in a storage location outside the Site (but not including property stored at the premises of a manufacturer or Supplier).
6. Extend to cover damage or loss to insured property while in transit.
7. Allow for partial occupation or use of the Work by Owner, such that those portions of the Work that are not yet occupied or used by Owner shall remain covered by the builder's risk insurance.
8. Allow for the waiver of the insurer's subrogation rights, as set forth in this Contract.
9. Provide primary coverage for all losses and damages caused by the perils or causes of loss covered.
10. Not include a co-insurance clause or show coinsurance as 'nil'.
11. Include an exception for ensuing losses from physical damage or loss with respect to any defective workmanship, design, or materials exclusions.
12. Include performance/hot testing and start-up.
13. Be maintained in effect, subject to the provisions herein regarding Substantial Completion and partial occupancy or use of the Work by Owner, until the Work is complete.

This document is a MODIFIED version of EJCDC® C-800, Supplementary Conditions of the Construction Contract. Copyright© 2018 National Society of Professional Engineers, American Council of Engineering Companies, and American Society of Civil Engineers. All rights reserved.

14. Provide insurance sublimit coverage of $10,000,000 or the full value of the work, whichever is less, for earth movement (earthquake), flood, and windstorm.

B. *Notice of Cancellation or Change*: All the policies of insurance (and the certificates or other evidence thereof) required to be purchased and maintained in accordance with this Paragraph 6.04 will contain a provision or endorsement that the coverage afforded will not be canceled or materially changed or renewal refused until at least 30 calendar days prior written notice (10 calendar days Non-Payment) has been given to the purchasing policyholder. Within 3 calendar days of receipt of any such written notice, the purchasing policyholder shall provide a copy of the notice to each other insured.

C. *Deductibles*: The Contractor shall be responsible for all policy deductibles on Builder's Risk or property insurance. Maximum property deductibles permitted without prior agreement with the Owner shall be $50,000 all other perils, 2 percent of insured value for wind and hail and $50,000 flood and earthquake. The Contractor shall be responsible for any and all deductibles under such insurance.

D. *Partial Occupancy or Use by Owner*: If Owner will occupy or use a portion or portions of the Work prior to Substantial Completion of all the Work as provided in Paragraph 15.04, then Owner (directly, if it is the purchaser of the builder's risk policy, or through Contractor) will provide notice of such occupancy or use to the builder's risk insurer. The builder's risk insurance shall not be canceled or permitted to lapse on account of any such partial use or occupancy; rather, those portions of the Work that are occupied or used by Owner may come off the builder's risk policy, while those portions of the Work not yet occupied or used by Owner shall remain covered by the builder's risk insurance.

E. *Additional Insurance*: If Contractor elects to obtain other special insurance to be included in or supplement the builder's risk or property insurance policies provided under this Paragraph 6.04, it may do so at Contractor's expense.

F. *Insurance of Other Property*: If the express insurance provisions of the Contract do not require or address the insurance of a property item or interest, such as tools, construction equipment, or other personal property owned by Contractor, a Subcontractor, or an employee of Contractor or a Subcontractor, then the entity or individual owning such property item will be responsible for deciding whether to insure it, and if so in what amount. The Contractor shall be responsible for any and all deductibles under such insurance.

6.05 *Property Losses; Subrogation*

SC-6.05 Delete in their entirety Paragraphs 6.05.A, 6.05.B, and 6.05.C and replace it with the following:

A. All policies purchased in accordance with Paragraph 6.04, expressly including the builder's risk policy, shall contain provisions to the effect that in the event of payment of any loss or damage the insurers will have no rights of recovery against any insureds thereunder, or against Engineer or its consultants, or their officers, directors, members, partners, employees, agents, consultants, or subcontractors except for losses and damages arising out of the improper performance or the failure to perform adequate professional services. Owner and Contractor waive all rights against each other and the respective officers, directors, members, partners, employees, agents, consultants, and subcontractors of each and any of them, for all losses and damages

This document is a MODIFIED version of EJCDC® C-800, Supplementary Conditions of the Construction Contract. Copyright© 2018 National Society of Professional Engineers, American Council of Engineering Companies, and American Society of Civil Engineers. All rights reserved.

caused by, arising out of, or resulting from any of the perils or causes of loss covered by such policies and any other property insurance applicable to the Work; and, in addition, waive all such rights against Engineer, its consultants, all Subcontractors, all individuals or entities identified in the Supplementary Conditions as insureds, and the officers, directors, members, partners, employees, agents, consultants, and subcontractors of each and any of them, under such policies for losses and damages so caused except for losses and damages arising out of the improper performance or the failure to perform adequate professional services. None of the above waivers shall extend to the rights that any party making such waiver may have to the proceeds of insurance held by Owner or Contractor as trustee or fiduciary, or otherwise payable under any policy so issued.

B. Intentionally Omitted.

C. Intentionally Omitted.

ARTICLE 7 – CONTRACTOR'S RESPONSIBILITIES

7.03 *Labor; Working Hours*

SC-7.03 Delete Paragraph 7.03.C and replace it with the following:

C. Regular working hours will be Monday through Friday 7:00 a.m. to 5:00 p.m. Contractor may Work at the Site outside regular working hours or on a legal holiday with a written request, subject to approval by the Owner. Weekend construction activities and any pile driving shall begin no earlier than 8 a.m..

7.07 *Concerning Subcontractors and Suppliers*

SC-7.07 Amend Paragraph 7.07.A by adding the following new sentence:

Contractor shall perform a minimum of [25 percent for pipeline or other similar project] **OR** [10 percent for pump station, plant, directional drill or other similar projects] of the on-site labor with its own forces.

SC-7.07 Add new paragraphs immediately after Paragraph 7.07.M:

N. Contractor shall be fully responsible to Owner and Engineer for all acts and omissions of the Subcontractors, Suppliers, and other individuals or entities performing or furnishing any of the Work just as Contractor is responsible for Contractor's own acts and omissions.

O. Nothing in the Contract Documents:

1. shall create for the benefit of any such Subcontractor, Supplier, or other individual or entity any contractual relationship between Owner or Engineer and any such Subcontractor, Supplier, or other individual or entity; nor

2. shall create any obligation on the part of the Owner or Engineer to pay or to see to the payment of any money due any such Subcontractor, Supplier, or other individual or entity except as many otherwise be required by Laws and Regulations.

7.10 **[OPTIONAL- Projects for abating or preventing air or water pollution]** *Taxes*

SC-7.10 Add new paragraph immediately after Paragraph 7.10.A:

B. Bidders are advised that this is a pollution control project and as such certain

This document is a MODIFIED version of EJCDC® C-800, Supplementary Conditions of the Construction Contract. Copyright© 2018 National Society of Professional Engineers, American Council of Engineering Companies, and American Society of Civil Engineers. All rights reserved.

materials and equipment will be exempt from Virginia sales tax in accordance with §58.1-3660 of the Code of Virginia, as amended, upon a request by the Successful Bidder to the HRSD Contract Specialist. Information to be submitted via email (a) Project Title, (b) Project Location, (c) Anticipated Project Completion Date, and (d) Description/List of the equipment and facilities to be purchased.

7.12 *Record Documents*

SC-7.12 Add new paragraph immediately after Paragraph 7.12.A:

B. Further requirements for the maintenance of record documents and the documentation of as-built data are defined further in the technical specifications. The Contractor's lack of meeting the record document requirement listed herein and further defined in the technical specifications can be a cause for the delay of progress payment of payments by the Owner to the Contactor until the needed information is properly verified by the Engineer.

7.13 **[OPTIONAL]** *Safety and Protection*

SC-7.13 Add new subparagraph immediately after Paragraph 7.13.G:

1. The following Owner safety programs are applicable to the Work: [Expressly identify by title and/or date, any such Owner safety programs].

7.17 *Contractor's General Warranty and Guarantee*

SC-7.17 Amend Paragraph 7.17.C.2 by adding the following new sentence:

Normal wear and tear is defined as unavoidable minor deterioration of the Work resulting from normal use.

SC-7.17 Add new paragraph immediately after Paragraph 7.17.E:

F. *Standard of Care:* All Work performed pursuant to the Contract Documents shall be consistent with the Contractor's highest and best work, which shall be at least as good as the standard of care, skill, attention, priority, and judgement provided by first class, experienced Contractors in the greater Hampton Roads area (the "Standard of Care"). The Contractor shall supervise and direct the Work in accordance with the Standard of Care.

7.18 *Indemnification*

SC-7.18 Delete Paragraph 7.18.A and replace it with the following:

A. To the fullest extent permitted by Laws and Regulations, and in addition to any other obligations of the Contractor under the Contract or otherwise, Contractor shall indemnify and hold harmless Owner and Engineer, and the officers, directors, members, partners, employees, agents, consultants and subcontractors of each and any of them from and against all claims, costs losses, damages and judgments (including but not limited to all fees and charges of engineers, architects, attorneys, and other professionals and all court or arbitration or other dispute resolution costs) arising out of or relating to or resulting from the performance or furnishing of the Work, provided that any such claim, action, loss, cost, judgment, or damage is attributable to bodily injury, sickness, disease, or death, or to injury to, damage to or destruction of tangible property (other than work itself) including the loss of use resulting therefrom but only to the extent caused by any negligent act or omission of Contractor, and Subcontractor, and Supplier, or any individual or entity directly or

This document is a MODIFIED version of EJCDC® C-800, Supplementary Conditions of the Construction Contract. Copyright© 2018 National Society of Professional Engineers, American Council of Engineering Companies, and American Society of Civil Engineers. All rights reserved.

indirectly employed by any of them to perform any of the Work or anyone for whose acts any of them may be liable.

7.20 *Submittals Using Project Management Software*

SC-7.20 Add new section immediately after Section 7.19:

7.20 *Submittals Using Project Management Software*

A. Contractor, shall submit the following information and documentation using the HRSD Project Management Software (Oracle ERP and Unifier):

1. Pay applications.
2. Shop Drawings, Operations and Maintenance (O&M) Manuals, and Material and Spare Parts Turnover forms.
3. Certificate of Substantial Completion.
4. Other forms and submittals as mutually agreed upon.

B. Contractor personnel shall attend HRSD training to implement usage of software.

ARTICLE 8 – OTHER WORK AT THE SITE

8.02 **[OPTIONAL]** *Coordination*

SC-8.02 Delete in its entirety Paragraph 8.02.A and replace it with the following:

A. Owner intends to contract with others for the performance of other work at or adjacent to the Site.

1. [identify individual or entirety] shall have authority and responsibility for coordination of the various contractors and work forces at the Site;
2. The following specific matters are to be covered by such authority and responsibility: [itemize such matters].
3. The extent of such authority and responsibilities is: [provide the extent].

8.04 *Claims Between Contractors*

SC-8.04 Add new section immediately after Section 8.03:

8.04 *Claims Between Contractors*

A. Should Contractor cause damage to the work or property of any other contractor at the Site, or should any claim arising out of Contractor's performance of the Work at the Site be made by any other contractor against Contractor, Owner, Engineering, or Resident Project Representative, Contractor shall promptly attempt to settle with such other contractor by agreement, or to otherwise resolve the dispute by arbitration or at law.

B. Contractor shall, to the fullest extent permitted by Laws and Regulations, indemnify and hold harmless Owner, Engineer, Resident Project Representative (RPR) or Owner's designee, and the officers, directors, partners, employees, agents and other consultants and subcontractors of each and any of them from and against all claims, costs, losses and damages (including, but not limited to, fees and charges of engineers, architects,

This document is a MODIFIED version of EJCDC® C-800, Supplementary Conditions of the Construction Contract. Copyright© 2018 National Society of Professional Engineers, American Council of Engineering Companies, and American Society of Civil Engineers. All rights reserved.

attorneys, and other professionals and court and arbitration costs) arising directly, indirectly or consequentially out of any action, legal or equitable, brought by any other contractor against Owner, Engineer, Engineer's Consultants, or the RPR to the extent said claim is based on or arises out of Contractor's performance of the Work. Should another contractor cause damage to the Work or property of Contractor or should the performance of work by any other contractor at the Site give rise to any other Claim, Contractor shall not institute any action, legal or equitable, against Owner, Engineer, RPR, or Owner's designee or permit any action to be maintained and continued in its name or for its benefit in any court or before any arbiter which seeks to impose liability on or to recover damages from Owner or Engineer, or RPR or designee on account of any such damage or Claim.

C. If Contractor is delayed at any time in performing or furnishing Work by any act or negligence of another contractor, and Owner and Contractor are unable to agree as to the extent of any adjustment in Contract Times attributable thereto, Contractor may make a Claim for an extension of times in accordance with Article 12. An extension of the Contract Times shall be Contractor's exclusive remedy with respect to Owner, Engineer, and Resident Project Representative for any delay, disruption, interference, or hindrance caused by any other contractor. This paragraph does not prevent recovery from Owner, Engineer, or Resident Project Representative for activities that are their respective responsibilities.

ARTICLE 10 – ENGINEER'S STATUS DURING CONSTRUCTION

10.03 Resident Project Representative

[NOTE: Engineer to review and modify as required based on split of duties between RPR and Contract Administrator]

SC-10.03 Add new paragraph immediately after Paragraph 10.03.B:

C. The Resident Project Representative (RPR) will be Engineer's representative at the Site. RPR's dealings in matters pertaining to the Work in general will be with Engineer and Contractor. RPR's dealings with Subcontractors will only be through or with the full knowledge or approval of Contractor. The responsibilities, authority, and limitations of the RPR are limited to those of Engineer in accordance with this Paragraph 10.03 and as set forth elsewhere in the Contract Documents. The authority and responsibilities of RPR follows:

1. *Schedules:* Review and monitor the Progress Schedule, Schedule of Submittals, and Schedule of Values prepared by Contractor and consult with Engineer concerning acceptability.

2. *Conferences and Meetings:* Conduct or attend meetings with Contractor, such as preconstruction conferences, progress meetings, Work conferences, and other Project related meetings.

3. *Safety Compliance:* Comply with Site safety programs, as they apply to RPR, and if required to do so by such safety programs, receive safety training specifically related to RPR's own personal safety while at the Site.

4. *Liaison*:

This document is a MODIFIED version of EJCDC® C-800, Supplementary Conditions of the Construction Contract. Copyright© 2018 National Society of Professional Engineers, American Council of Engineering Companies, and American Society of Civil Engineers. All rights reserved.

a. Serve as Engineer's liaison with Contractor. Working principally through Contractor's authorized representative or designee and assist in providing information regarding the provisions and intent of the Contract Documents.

b. Assist Engineer in serving as Owner's liaison with Contractor when Contractor's operations affect Owner's on-Site operations.

c. Assist in obtaining from Owner additional details or information, when required for Contractor's proper execution of the Work.

5. *Submittals:*

a. Record date of receipt of Submittals and samples approved by Contractor.

b. Receive Submittals and samples furnished at the Site by Contractor, and notify Engineer of availability of samples for examination.

c. Advise Engineer and Contractor of the commencement of any portion of the Construction requiring a Shop Drawing or sample for which RPR believes that the Submittal has not been accepted by Engineer.

6. *Review of Work, Rejection of Defective Work, Inspections, and Tests:*

a. Conduct on-site observations of the Work in progress to assist Engineer in determining if the Work is in general proceeding in accordance with the Contract Documents.

b. Inform Engineer and Contractor whenever RPR believes that any Work is defective.

c. Advise Engineer whenever RPR believes that any Work will not produce a completed Project that conforms generally to the Contract Documents or will prejudice the integrity of the design concept of the completed Project as a functioning whole as indicated in the Contract Documents, or whenever RPR believes Work should be uncovered for observation, or requires special testing, inspection, or approval.

d. Monitor tests, equipment and systems start-ups, and operating and maintenance training are conducted in the presence of appropriate personnel, and that the Contractor maintains adequate records thereof.

e. Observe, record and report to Engineer appropriate details relative to the test procedures and startups.

f. Accompany visiting inspectors representing public or other agencies having jurisdiction over the Project; record the results of these inspections and report to Engineer.

7. *Interpretation of Contract Documents:* Inform Engineer when clarifications and interpretations of the Contract Documents are needed and transmit to Contractor clarifications and interpretations as issued by Engineer.

8. *Modifications:* Consider and evaluate Contractor's suggestions for modifications in Drawings or Specifications and provide recommendations to Engineer; transmit to Contractor the decisions issued by Engineer.

9. *Records*:

This document is a MODIFIED version of EJCDC® C-800, Supplementary Conditions of the Construction Contract. Copyright© 2018 National Society of Professional Engineers, American Council of Engineering Companies, and American Society of Civil Engineers. All rights reserved.

a. Maintain at the Site files for correspondence, conference records, Submittals including Shop Drawings and Samples, reproductions of original Contract Documents including all Addenda, the signed Agreement, Work Change Directives, Change Orders, Field Orders, additional Drawings issued after the Effective Date of the Agreement, Engineer's written clarifications and interpretations, progress reports, and other Project related documents.

b. Keep a diary or log book recording pertinent Site conditions, activities, decisions, and events.

10. *Reports*:

    a. Furnish Engineer periodic reports of progress of the Work and of Contractor's compliance with the Progress Schedule and Schedule of Submittals submissions.

    b. Consult with Engineer in advance of scheduled major tests, inspections or start of important phases of the Work.

    c. Assist in drafting proposed Change Orders, Work Change Directives, and Field Orders; obtain backup material from Contractor as appropriate.

11. *Payment Requests*: Review each Application for Payment with Contractor for compliance with the established procedure for their submission and forward with recommendations to Engineer, noting particularly the relationship of the payment requested to: (a) the Schedule of Values, accepted by Engineer, (b) relevant cost of the work provisions, (c) Work completed, and (d) materials and equipment delivered to the Site but not incorporated in the Work.

12. *Certificates, Operation and Maintenance Manuals, Record Documents, and Site Records*: During the course of the Work, review and monitor that these documents and other data required by the Contract Documents to be assembled, maintained, and furnished by Contractor, noting whether the documentation is applicable to the items actually installed, and deliver to Engineer for its review and acceptance prior to final payment for that part of the Work.

13. *Completion*:

    a. Conduct an inspection in the company of Engineer, Owner, and Contractor to determine Substantial Completion and prepare a list of items to be completed or corrected; submit to Engineer a list of observed items requiring completion or correction.

    b. Conduct final inspection in the company of Engineer, Owner, and Contractor and notify Contractor and Engineer in writing of all particulars in which this inspection reveals that the Work is incomplete or defective.

    c. Observe that all items on final list have been completed, corrected, or accepted by Owner and make recommendations to Engineer concerning acceptance.

14. *Provide Direction During Emergency:* Provide direction to Contractor during times of emergency or when imminent risk of death or serious risk of danger to individuals or property is likely.

15. *Limitations of Authority*: RPR shall not:

    a. Authorize any deviation from the Contract Documents or substitution of

This document is a MODIFIED version of EJCDC® C-800, Supplementary Conditions of the Construction Contract. Copyright© 2018 National Society of Professional Engineers, American Council of Engineering Companies, and American Society of Civil Engineers. All rights reserved.

materials or equipment (including "or equal" items), unless authorized by Engineer.

b. Exceed limitations of Engineer's authority as set forth in the Contract Documents.

c. Undertake any of the responsibilities of Contractor, Contractor's authorized representative or designee, Subcontractors, or Suppliers.

d. Accept Submittals from anyone other than Contractor.

e. Authorize Owner to occupy the Project in whole or in part; or

f. Participate in specialized field or laboratory tests or inspections conducted by others, except as specifically authorized by Engineer.

ARTICLE 11 – CHANGES TO THE CONTRACT

11.05 *Owner-Authorized Changes in the Work*

SC-11.05 Add new paragraph immediately after Paragraph 11.05.C:

D. Changes in the Work requested by Owner will be documented by the Engineer through the use of a Request for Proposal. This document will be prepared by the Engineer and shall describe the proposed changes. The document shall be signed by the Engineer and Contractor and provided to the Owner for information.

11.09 *Change Proposals*

SC-11.09 Delete in its entirety Paragraph 11.09.B.5 and replace it with the following:

5. Intentionally Omitted.

11.11 *Claims*

SC-11.11 Add new section immediately after Section 11.10:

11.11 *Claims*

A. *Notice:* If Owner and Contractor are unable to agree on entitlement to, or on the amount or extent, if any, of an adjustment in the Contract Price or an adjustment of the Contract Times that should be allowed as a result of any order of Owner pursuant to this Article or other occurrence for which the Contract Documents provide that such adjustment(s) may be made, a Claim may be made therefor. Written notice of intent to make such a Claim shall be submitted to the other party promptly and in no event more than 15 calendar days after the start of the occurrence or event giving rise to the Claim.

B. *Documentation:* Substantiating documentation shall be submitted by the claiming party within 30 calendar days after delivery of the notice required by Paragraph 11.11.A.

C. *Decision:* The other party shall render a decision on the Claim no more than 30 calendar days after the receipt of the substantiating documentation required by Paragraph 11.11.B. This decision will be final and binding unless the claiming party gives notice of intention to exercise its rights under Article 17 within 30 calendar days of receipt of the decision and exercises such rights within 30 calendar days of giving the notice of intent.

D. *Time Limit Extension:* The time limits of Paragraphs 11.11.B and 11.11.C may

This document is a MODIFIED version of EJCDC® C-800, Supplementary Conditions of the Construction Contract. Copyright© 2018 National Society of Professional Engineers, American Council of Engineering Companies, and American Society of Civil Engineers. All rights reserved.

be extended by mutual agreement.

ARTICLE 13 – COST OF THE WORK; ALLOWANCES, UNIT PRICE WORK

13.01 *Cost of the Work*

SC-13.01 Amend Paragraph 13.01.B.1 by adding the following new paragraph:

Such employees shall also include Contractor's Project Manager, Project Engineer and other similar positions, if applicable. For these employees to be included in the Cost of Work, documentation shall be provided showing that these individuals have actually been an integral part of the project, at least 10 hours per week, and have consistently charged time to the project. Payroll records for these individuals shall be provided if requested by the Owner.

SC-13.01 Delete in its entirety Paragraph 13.01.B.5.c and replace it with the following:

c. *Construction Equipment and Machinery*:

1) Rentals of all construction equipment and machinery, and the parts thereof in accordance with rental agreements approved by Owner, and the costs of transportation, loading, unloading, assembly, dismantling, and removal thereof. All such costs shall be in accordance with the terms of said rental agreements. The rental of any such equipment, machinery, or parts shall cease when the use thereof is no longer necessary for the Work.

2) Costs for equipment and machinery owned by Contractor will be paid at a rate not to exceed that shown for such equipment in the Rental Rate Blue Book for Construction Equipment. An hourly rate will be computed by dividing the monthly rates by 176. These computed rates will include all operating costs. Costs will include the time the equipment or machinery is in use on the changed Work and the costs of transportation, loading, unloading, assembly, dismantling, and removal when directly attributable to the changed Work. The cost of any such equipment or machinery, or parts thereof, shall cease to accrue when the use thereof is no longer necessary for the changed Work. Equipment or machinery with a value of less than $1,000 will be considered small tools.

13.03 *Unit Price Work*

SC-13.03 Delete in its entirety Paragraph 13.03.E and replace it with the following:

E. *Adjustments in Unit Price:* Contractor or Owner shall be entitled to an adjustment in the unit price with respect to an item of Unit Price Work if:

1. If the extended price of a particular item of Unit Price Work amounts to 5 percent or more of the Contract Price (based on estimated quantities at the time of Contract formation) and the variation in the quantity of that particular item of Unit Price Work actually furnished or performed by Contractor differs by more than 25 percent from the estimated quantity of such item indicated in the Agreement;

2. If there is not corresponding adjustment with respect to any other item of Work; and

3. If Contractor believes that Contractor has incurred additional expense as a result thereof, Contractor may submit a Change Proposal, or if Owner believes that the quantity variation entitles Owner to an adjustment in the unit price, seeking an

This document is a MODIFIED version of EJCDC® C-800, Supplementary Conditions of the Construction Contract. Copyright© 2018 National Society of Professional Engineers, American Council of Engineering Companies, and American Society of Civil Engineers. All rights reserved.

adjustment in Contract Price.

ARTICLE 15 – PAYMENTS TO CONTRACTOR; CORRECTION, REMOVAL, OR ACCEPTANCE OF DEFECTIVE WORK

15.01 *Progress Payments*

SC-15.01 Delete Paragraph 15.01.D.1 and replace it with the following:

1. No more than 30 calendar days after presentation of the Application of Payment to Owner with Engineer's affirmative recommendation, the amount (subject to the provisions of Paragraph 15.01.E) will become due and when due will be paid by owner to the Contractor.

15.03 *Substantial Completion*

SC-15.03 Add new subparagraph immediately after Paragraph 15.03.B:

1. If some or all of the Work has been determined not to be a point of Substantial Completion and will require re-inspection or re-testing by Engineer, the cost of such re-inspection or re-testing, including the cost of time, travel and living expenses, shall be paid by Contractor to Owner. If Contractor does not pay, or the parties are unable to agree as to the amount owed, then Owner may impose a reasonable set-off against payments due under this Article 15.

15.06 *Final Payment*

SC-15.06 Add new subparagraph immediately after Paragraph 15.06.A.2.e:

f. Documentation of resolution of all claims against Contractor or Subcontractors by any third party.

ARTICLE 17 – DISPUTES

17.01 *Methods and Procedures*

SC-17.01 Delete in its entirety Section 17.01 and replace it with the following:

A. Engineer's action under Paragraph 11.11.C or a denial pursuant to Paragraphs 11.11.C shall become final and binding 30 calendar days after receipt of written notice of Owner's action or decision unless, within that time period, Owner or Contractor gives to the other party written notice of intent to submit the Claim to a process of bilateral negotiations as set forth below.

B. Within 30 calendar days of the delivery of such notice, Owner, Contractor, and Engineer (if requested) shall meet and confer regarding the Claim. A good-faith effort to negotiate resolution shall be made by both parties.

C. If the negotiations are unsuccessful, management representatives of Owner, Contractor, and Engineer (if requested) at least one tier above the individuals who met initially shall meet, confer, and negotiate within 45 calendar days of the closure of the unsuccessful negotiations.

D. If the claim is not resolved by negotiation, either Owner or Contractor may request within 10 calendar days of termination of negotiations non-binding mediation of any Claim submitted to Engineer for a decision under Paragraph 11.11 before such decision becomes final and binding. If both parties agree to mediation in writing within 10 calendar days, the mediation will proceed and be governed by the

This document is a MODIFIED version of EJCDC® C-800, Supplementary Conditions of the Construction Contract. Copyright© 2018 National Society of Professional Engineers, American Council of Engineering Companies, and American Society of Civil Engineers. All rights reserved.

Construction Industry Mediation Rules of the American Arbitration Association in effect as of the Effective Date of the Agreement. The request for mediation shall be submitted in writing to the American Arbitration Association and the other party to the Contract. Timely submission of the request shall stay the effect of Paragraph 11.11.

E. Owner and Contractor shall participate in the mediation process in good faith. The process shall be concluded within 60 calendar days of filing of the request. The date of termination of the mediation shall be determined by application of the mediation rules referenced above.

F. If the Claim is not resolved by negotiation and mediation, Engineer's action under Paragraph 11.11 or a denial pursuant to Paragraphs 11.11 shall become final and binding 30 calendar days after termination of the mediation unless, within that time period, Owner or Contractor:

1. gives to the other party written notice of intent to submit the Claim to a court of competent jurisdiction, or

2. agrees with the other party in writing to submit the Claim to another dispute resolution process.

G. Notwithstanding any applicable statute of limitations, a party giving notice under this Paragraph 17.01 shall commence an action on the Claim within 6 months of said notice. Failure to do so shall result in the Claim being time-barred and Engineer's action or denial shall become final and binding.

17.02 *Attorney's Fees*

SC-17.02 Add new paragraph immediately after Paragraph 17.01:

17.02 *Attorney's Fees*

A. For any matter subject to final resolution under this Article, the prevailing party shall be entitled to an award of its attorney's fees incurred in the final resolution proceedings, in an equitable amount to be determined in the discretion of the court, arbitrator, arbitration panel, or other arbiter of the matter subject to final resolution, taking into account the parties' initial demand or defense positions in comparison with the final results.

ARTICLE 18 – MISCELLANEOUS

18.01 *Giving Notice*

SC-18.01 Delete Paragraph 18.01.A.3 and replace it with the following:

3. by e-mail, with the words "Formal Notice" or similar in the e-mail's subject line and follow up within 7 calendar days as listed in subparagraph 18.01.A.1 or 18.01.A.2.

18.07 *Controlling Law*

SC-18.07 Add new paragraph immediately after Paragraph 18.07.A:

B. Any formal proceedings shall be instituted in the Circuit Court of the City of Virginia Beach, Virginia, or the United States District Court for the Eastern District of Virginia, Norfolk Division.

This document is a MODIFIED version of EJCDC® C-800, Supplementary Conditions of the Construction Contract. Copyright© 2018 National Society of Professional Engineers, American Council of Engineering Companies, and American Society of Civil Engineers. All rights reserved.

TECHNICAL SPECIFICATIONS

Section 39 - Construction Administration Forms/Formats

A. Introduction – The FIRM is responsible for providing bid ready plans, specifications, addenda, final opinion of probable construction costs to HRSD's Contract Specialist on Design-Bid-Build project delivery for bidding the appropriate project in HRSD's Enterprise Resource Planning (ERP) System. During the pre-construction phase the FIRM is to attend the pre-bid meeting (if one is specified), attend the site visit (if one is specified), attend the bid opening (if required), evaluate the received bids and qualifications of the bidder, and recommend award of a construction contract to the lowest responsive and responsible bidder. HRSD will then obtain Commission approval, issue the Notice of Award, review and approve the bonds and insurance certificates, sign the contracts using HRSD's Enterprise Project Management (Unifier) system. The FIRM will then be asked to issue the Notice to Proceed and administer and inspect the contract using HRSD's Unifier system. The following forms/formats shall be used in the administration of the traditional bid construction contracts. All are available in electronic format. The HRSD Contract Specialist and Project Manager will work with the FIRM to customize these forms/formats for each project. The FIRM shall provide any other forms or formats required subject to the HRSD's Project Manager's approval.

B. Contract Administration Forms - The below listed forms/formats are included for traditional Design-Bid-Build project delivery at the end of this Section.

1. Sample Bid Recommendation Letter
2. Notice of Award [*Issued by HRSD's Contract Specialist*]
3. Notice to Proceed
4. Emergency Contact List
5. Field Order
6. Request for Proposal
7. Work Change Directive
8. Change Order
9. Application for Payment
    a. Summary Sheet
    b. Schedule of Values – Lump Sum
    c. Schedule of Values – Unit Price
    d. Stored Materials Inventory
    e. Diversity Procurement Statement
    f. Diversity Procurement Statement starting *July 1, 2023*
    g. WIFIA Requirement Only: HRSD Contractor Progress Report
10. Certificate of Substantial Completion
11. Notice of Acceptability
12. Warranty Memorandum

End of Section

SAMPLE BID RECOMMENDATION LETTER

ENGINEER LETTERHEAD

Date: [ ]

Mr. _____
Chief of Design & Construction
HRSD
P.O. Box 5911
Virginia Beach, Virginia 23471-0911

RE: [Project title as on plans and specifications]

Dear Mr. _____:

We have evaluated the bids received on [date] for the [Project Title] which consists of [brief description].

[# of bids] were received as shown below.

[Full name of each bidder-listed lowest to highest] [Amount of bid]

Engineer's Estimate [Amount of estimate]

*[Use asterisk to note any discrepancies or corrections]

[If the difference between low bid and engineer's estimate is greater than 10%, explain why.]

The low bid was submitted by [name of low bidder] in the amount of [amount of bid]. Our evaluation of the experience, reputation, and financial condition of [name of low bidder] indicates that they are capable of completing the work required. Therefore, we recommend the award of a contract for construction of the [Project Title] to [name of low bidder] in the amount of [amount of bid].

Very truly yours,

[Name], P.E.
[Title]

[If bids are being rejected or further explanation of the evaluation is needed, provide a draft recommendation letter to the HRSD Project Manager for review and comment.]

NOTICE OF AWARD

Date of Contract: «Contract_Date»

Owner:	Hampton Roads Sanitation District	Owner's Contract No.:	«Owner_Contract»
Engineer:	«Engineer»	Engineer's Contract No.:	«Engineer_Contract»
Contract:	«Contract»		
Bidder:	«Contractor»		
Bidder's Address:	«Address_Line_1», «Address_Line_2»		

You are notified that Owner has accepted your Bid dated, «Bid_Date», for the above Contract, and that you are the Successful Bidder and are awarded a Contract for «Contract».

The Contract Price of the awarded Contract is «Value_words» dollars ($«Contract_Value»). Contract Price is subject to adjustment based on the provisions of the Contract, including but not limited to those governing changes, Unit Price Work, and Work performed on a cost-plus-fee basis, as applicable.

One copy of the proposed Contract Documents (except Specifications and Drawings) accompanies this Notice of Award.

Four copies of Specifications and Drawings will be provided by the Engineer after the Notice to Proceed, if requested by Contractor.

You must comply with the following conditions precedent within 15 days of the date of receipt of this Notice of Award:

1. Review and approve the Agreement via HRSD's Online Oracle Enterprise Resource Planning (ERP) system by replying to the Online Discussion.
2. Submit via HRSD's Online Oracle ERP system as an Online Discussion the Contract security (such as required performance and payment bonds) and insurance documentation, as specified in the Instructions to Bidders (Article 21) and in the General Conditions and Supplementary Conditions (Article 6).
    a. [OPTIONAL] A sample certificate of insurance is provided to detail limits and other insurance requirements specific to this Project.

Failure to comply with these conditions within the time specified will entitle Owner to consider you in default, annul this Notice of Award, and declare your Bid security forfeited.

Within 10 days after you comply with the above conditions, Owner will return an electronic copy of the Agreement for acknowledgement in HRSD's Enterprise Project Management (Unifier) system, together with any additional copies of the Contract Documents as indicated in Paragraph 2.02 of the General Conditions and Supplementary Conditions.

[OPTIONAL] Also, please find the Tax Exemption Procedure for Pollution Control attached per Paragraph 7.10 of the Supplementary Conditions.

This document is a MODIFIED version of EJCDC® C-510, Notice of Award.
Copyright© 2018 National Society of Professional Engineers, American Council of Engineering Companies, and American Society of Civil Engineers. All rights reserved

NOTICE TO PROCEED

Date Issued: _____

Owner:	Hampton Roads Sanitation District	Owner's Contract No.:	«Owner_Contract»
Engineer:	«Engineer»	Engineer's Contract No.:	«Engineer_Contract»
Contractor:	«Contractor»	Date of Contract:	«Contract_Date»
Contract:	«Contract»		

Owner hereby notifies Contractor that the Contract Times under the above Contract will commence to run on [Add Date] pursuant to Paragraph 4.01 of the General Conditions.

On that date, Contractor shall start performing its obligations under the Contract Documents. No Work will be done at the Site prior to such date.

In accordance with the Agreement:

The date by which Substantial Completion must be achieved is [Add Date] («Substantial_Completion» days) and the date by which readiness for final payment must be achieved is [Add Date] («Final_Completion» days).

Before starting any Work at the Site, Contractor must comply with the following: [Add requirements]

[Note any access limitations, security procedures, or other restrictions]

Engineer: «Engineer»

By *(signature)*: _____

Name *(printed)*: _____

Title: _____

Date Issued: _____

Copy: Owner

This document is a MODIFIED version of EJCDC® C-550, Notice to Proceed.
Copyright© 2018 National Society of Professional Engineers, American Council of Engineering Companies, and American Society of Civil Engineers. All rights reserved

[PROJECT NAME]

EMERGENCY CONTACT LIST

Name	Position	Office	Cell	E-mail
ENGINEER				
	Project Manager			
	Project Engineer			
	Inspector			
	Resident Project Rep			
HRSD				
	Project Manager			
	Chief of D&C			
	Chief of IS Ops			
	IS Rep			
	Chief of Treatment			
	Plant Superintendent			
	Electrical			
Emergency Working Hours				
Emergency After hours				
CONTRACTOR				
	President			
	Superintendent			
	Project Manager			
	Safety representative			
KEY SUBCONTRACTOR				
KEY SUBCONTRACTOR				
CITY OR OTHER KEY CONTACTS				

FIELD ORDER NO.: _____

Date Issued: _____ Effective Date of Field Order: _____

Owner:	Hampton Roads Sanitation District	Owner's Contract No.:	«Owner_Contract»
Engineer:	«Engineer»	Engineer's Contract No.:	«Engineer_Contract»
Contractor:	«Contractor»		
Contract:	«Contract»		
Date of Contract:	«Contract_Date»	Notice to Proceed Date:	

Contractor is hereby directed to promptly perform the Work described in this Field Order, issued in accordance with Paragraph 11.04 of the General Conditions, for minor changes in the Work without changes in Contract Price or Contract Times. If Contractor considers that a change in Contract Price or Contract Times is required, submit a Change Proposal before proceeding with this Work.

Reference:

Specification Section(s): _____

Drawing(s) / Details (s): _____

Description:

Attachments:

Engineer by: _____ Date: _____

Contractor by: _____ Date: _____

Copy: Owner

This document is a MODIFIED version of EJCDC® C-942, Field Order.
Copyright© 2018 National Society of Professional Engineers, American Council of Engineering Companies, and American Society of Civil Engineers. All rights reserved

REQUEST FOR PROPOSAL NO.: _____

Date Issued: _____

Owner:	Hampton Roads Sanitation District	Owner's Contract No.:	«Owner_Contract»
Engineer:	«Engineer»	Engineer's Contract No.:	«Engineer_Contract»
Contractor:	«Contractor»		
Contract:	«Contract»		
Date of Contract:	«Contract_Date»	Notice to Proceed Date:	

The proposed changes are being considered in the Work on the above project as described below. Please advise us promptly of your proposed change in contract price and time to accomplish this work. Note that this is not an order to proceed with the proposed change. Notice to Proceed with the proposed change will be issued later in the form of a Change Order or Work Change Directive if it is decided to proceed with this change.

Proposed Changes:

Engineer by: _____ Date: _____

Contractor by: _____ Date: _____

Copy: HRSD, Chief of Design & Construction

WORK CHANGE DIRECTIVE NO.: _____

Date Issued: _____ Effective Date of Work Change Directive: _____

Owner:	Hampton Roads Sanitation District	Owner's Contract No.:	«Owner_Contract»
Engineer:	«Engineer»	Engineer's Contract No.:	«Engineer_Contract»
Contractor:	«Contractor»		
Contract:	«Contract»		
Date of Contract:	«Contract_Date»	Notice to Proceed Date:	

Contractor is directed to proceed promptly with the following change(s):

Item No.	Description

Attachments: (list documents related to the change to the Work)

Purpose for the Work Change Directive:

☐ Authorization for Work described herein to proceed on the basis of Cost of the Work due to:

☐ Non-agreement on pricing of proposed change.

☐ Necessity to expedite Work described herein prior to agreeing to changes on Contract Price and Contract Time.

☐ Authorization for Work described herein to proceed based on negotiated price – Estimated/Agreed (circle one) change in Contract Price and Contract Times:

Contract Price $ _____ (increase/decrease) Contract Time _____ days (increase/decrease)

If the change involves an increase, the estimated amounts are not to be exceeded without further authorization.

Approval for Engineer by: _____ Date: _____

Authorized for Owner by: _____ Date: _____

Authorized for Contractor by: _____ Date: _____

This document is a MODIFIED version of EJCDC® C-940, Work Change Directive.
Copyright© 2018 National Society of Professional Engineers, American Council of Engineering Companies, and American Society of Civil Engineers. All rights reserved

CHANGE ORDER NO.: _____

Date Issued: _____ Effective Date of Change Order: _____

Owner:	Hampton Roads Sanitation District	Owner's Contract No.:	«Owner_Contract»
Engineer:	«Engineer»	Engineer's Contract No.:	«Engineer_Contract»
Contractor:	«Contractor»		
Contract:	«Contract»		
Date of Contract:	«Contract_Date»	Notice to Proceed Date:	

The Contract is modified as follows upon execution of this Change Order:

Description:

Attachments: (List documents related to the change)

Change in Contract Price	Change in Contract Times
Original Contract Price: $ «Contract_Value»	Original Contract Times: Substantial Completion (days/date): «Substantial_Completion» Ready for final payment (days/date): «Final_Completion»
[Increase] [Decrease] from previously approved Change Orders No. 1 to No. _____: $ _____	**[Increase] [Decrease]** from previously approved Change Orders No.1 to No. _____: Substantial Completion (days): _____ Ready for final payment (days): _____
Contract Price prior to this Change Order: $ _____	Contract Times prior to this Change Order: Substantial Completion (days/date): _____ Ready for final payment (days/date): _____
[Increase] [Decrease] this Change Order: $ _____	**[Increase] [Decrease]** this Change Order: Substantial Completion (days): _____ Ready for final payment (days): _____
Contract Price incorporating this Change Order: $ _____	Contract Times with all approved Change Orders: Substantial Completion (days/date): _____ Ready for final payment (days/date): _____

By acceptance of this contract modification, parties hereby agree that the modification represents an equitable adjustment to the Contract and the Contractor further agrees to waive all rights to file further claims arising out of, or as a result of, this change.

The Agreement and all subsequent changes to the Agreement will be approved and executed using HRSD's Project Management system. Physical signatures will not be required if acknowledged by Contractor through the Online system.

This document is a MODIFIED version of EJCDC® C-941, Change Order.
Copyright© 2018 National Society of Professional Engineers, American Council of Engineering Companies, and American Society of Civil Engineers. All rights reserved

APPLICATION FOR PAYMENT

Project
Contractor
Remit to Address
Application Period
Application Date
Application No.

1. Original Contract Amount _____

2. Approved Change Order Amount _____
   Change Order _____ Through _____
   Original Completion Date _____
   Approved Time Extensions _____
   Revised Completion Date _____

3. Revised Contract Amount (Line 1 + Line 2) _____

4. Total Work Completed To Date (See attached Schedule of Values) _____

   Percent Complete (Line 4/Line 3) #DIV/0!

5. Total Stored Materials (See Attached) _____

6. Total Earned To Date (Line 4 + Line 5) _____

7. Total Retainage Held (Line 6 x 5%) Less Total Previous Retainage Released Amounts _____

7a. Retainage Release Amount Requested This Application (if applicable) _____

8. Total Earned To Date Less Total Retainage Held (Line 6 - Line 7 + Line 7a) _____

9. Total Previously Paid To Date (Line 8 from prior application) _____

10. Amount Due This Application (Line 8 - Line 9) _____

10a. Amount to Enter in Unifier (Line 6 - Line 6 from prior pay application) _____

11. Balance to Finish (Line 3 - Line 8) _____

CONTRACTOR'S Certification:

CONTRACTOR certifies that: (1) all previous progress payments received from OWNER on account of Work done under the Contract referred to above have been applied to discharge in full all obligations of CONTRACTOR incurred in connection with Work covered by prior Applications for Payment; (2) title to all Work, materials and equipment incorporated in said Work or otherwise listed in or covered by this Application for Payment will pass to OWNER at time of payment free and clear of all liens, claims, security interest and encumbrances (except such as are covered by Bond Acceptable to OWNER against any such lien, claim, security interest or encumbrance); and (3) all Work covered by this Application for Payment is in accordance with the Contract Documents and not defective as that term is defined in the Contract Documents.

Application For Payment
Schedule Of Values - Lump Sum Contract

Project
Contractor
Period
Application No.

Item	Description	Total Value	Previous Completed to Date		This Period	Total Completed To Date		Balance Value
			%	Value		%	Value	
Total Original Contract			#DIV/0!			#DIV/0!		

Approved Change Orders

No.	Description							
Total Change Orders			#DIV/0!			#DIV/0!		

Grand Total		#DIV/0!			#DIV/0!		

Application For Payment
Schedule Of Values - Unit Price Contract

Project
Contractor
Period
Application No.

ITEM NO.	DESCRIPTION OF ITEM	SCHEDULE QUANTITY BID QUANT	UNIT	UNIT PRICE	BID VALUE	TOTAL QUANTITIES PREVIOUSLY REPORTED	THIS PERIOD	TOTAL COMPLETED	TOTAL AMOUNT DUE THIS PERIOD	TOTAL AMOUNT DUE TO DATE	%	BALANCE TO FINISH
1											#DIV/0!	
2											#DIV/0!	
3											#DIV/0!	
4											#DIV/0!	
5											#DIV/0!	
6											#DIV/0!	
7											#DIV/0!	
8											#DIV/0!	
9											#DIV/0!	
10											#DIV/0!	
11											#DIV/0!	
12											#DIV/0!	
13											#DIV/0!	
14											#DIV/0!	
Total Original Contract											**#DIV/0!**	

Approved Change Orders

NO.	Description											
											#DIV/0!	
											#DIV/0!	
											#DIV/0!	
											#DIV/0!	
											#DIV/0!	
Total Change Orders											**#DIV/0!**	

TOTAL CONTRACT											**#DIV/0!**	

Application For Payment
Stored Materials

Project 0
Contractor 0
Period 0
Application No. 0

Item No.*	Vendor	Invoice No.	Material	Original Value	Installed		Stored Value	Invoice ** Submitted
					Value	%		
Totals				$0.00	$0.00		$0.00	

***Should match line item on Application For Payment Schedule of Values**
****Represents the Application For Payment number when first submitted**

DIVERSITY PROCUREMENT STATEMENT

Contractor, subcontractors, and suppliers are encouraged to provide for the participation of small, women, minority, and veteran owned businesses (SWaM) in this contract.

Project 0

Contractor 0

Application No. 0

1 For this month, list the total value of work in place. _____

2 Is Contractor

a. Small business? YES NO
b. Women-owned business? YES NO
c. Minority-owned business? YES NO
d. Service disabled veteran-owned business? YES NO

3 If Contractor is SWaM, list the total value of work (this invoice) invoiced by Contractor. _____

4 List all SWaM subcontractors, amounts due them on this invoice, and what type business they are.

Subcontractor	Amount due	Small Business	Women Owned	Minority Owned	Veteran Owned

DIVERSITY PROCUREMENT STATEMENT

Contractor, Suppliers, and Subcontractors are encouraged to provide the participation of small, women-owned, and minority-owned (SWaM) businesses, service-disabled veteran-owned businesses (SDVOB), or disadvantaged business enterprises (DBE) in this Agreement.

Project 0

Contractor 0

Application No. 0

1 For this month (this invoice), list the total value of Work in place. _____

2 Is Contractor

a.	Small business?	YES	NO
b.	Women-owned business?	YES	NO
c.	Minority-owned business?	YES	NO
d.	Service disabled veteran-owned business?	YES	NO
e.	Disadvantaged business enterprise?	YES	NO

3 If Contractor is SWaM, list the total value of work (this invoice) invoiced by Contractor. _____

4 List all SWaM, SDVOB, and DBE Suppliers and/or Subcontractors, amounts due them on this invoice, and what type of business they are.

Subcontractor	Amount due	Small Business	Women Owned	Minority Owned	Veteran Owned	Disadvantaged Business

HRSD CONTRACTOR PROGRESS REPORT

Project	**0**
Contractor	**0**
Period	**1/0/1900**
Application No.	**1/0/1900**

Work Completed by Contractor:

Upcoming Activities:

CERTIFICATE OF SUBSTANTIAL COMPLETION

Date Issued: _____

Owner:	Hampton Roads Sanitation District	Owner's Contract No.:	«Owner_Contract»
Engineer:	«Engineer»	Engineer's Contract No.:	«Engineer_Contract»
Contractor:	«Contractor»		
Contract:	«Contract»		
Date of Contract:	«Contract_Date»	Notice to Proceed Date:	

This (tentative) (definitive) Certificate of Substantial Completion applies to:

☐ All Work under the Contract Documents ☐ The following specified portions of the Work:

Date of Substantial Completion: _____

The Work to which this Certificate applies has been inspected by authorized representatives of Owner, Contractor, and Engineer, and found to be substantially complete. The Date of Substantial Completion of the Work or portion thereof designated above is hereby established, subject to the provisions of the Contract pertaining to Substantial Completion. The date of Substantial Completion in the final Certificate of Substantial Completion marks the commencement of the contractual correction period and applicable warranties required by the Contract.

A list of items to be completed or corrected is attached to this Certificate; if applicable. This list may not be all-inclusive, and the failure to include any items on such list does not alter the responsibility of the Contractor to complete all Work in accordance with the Contract Documents.

Amendments of contractual responsibilities recorded in this Certificate should be the product of mutual agreement of Owner and Contractor; see Paragraph 15.03.D of the General Conditions.

The responsibilities between Owner and Contractor for security, operation, safety, maintenance, heat, utilities, insurance, and warranties upon Owner's use or occupancy of the Work must be as provided in the Contract, except as amended as follows:

Amendments to Owner's Responsibilities: ☐ None ☐ As follows:

Amendments to Contractor's Responsibilities: ☐ None ☐ As follows:

The following documents are attached to and made a part of this Certificate:

This Certificate does not constitute an acceptance of Work not in accordance with the Contract Documents, nor is it a release of Contractor's obligation to complete the Work in accordance with the Contract Documents.

Executed by Engineer: _____ Date: _____

Accepted by Contractor: _____ Date: _____

Accepted by Owner: _____ Date: _____

This document is MODIFIED version of EJCDC® C-625, Certificate of Substantial Completion.
Copyright© 2018 National Society of Professional Engineers, American Council of Engineering Companies, and American Society of Civil Engineers. All rights reserved.

NOTICE OF ACCEPTABILITY OF WORK

Date Issued: _____

Owner:	Hampton Roads Sanitation District	Owner's Contract No.:	«Owner_Contract»
Engineer:	«Engineer»	Engineer's Contract No.:	«Engineer_Contract»
Contractor:	«Contractor»		
Contract:	«Contract»		
Date of Contract:	«Contract_Date»	Notice to Proceed Date:	

The Engineer hereby gives notice to the Owner and Contractor that the Engineer recommends final payment to Contractor, and that the Work furnished and performed by Contractor under the Construction Contract is acceptable, expressly subject to the provisions of the Construction Contract's Contract Documents ("Contract Documents"). This Notice of Acceptability of Work (Notice) is made expressly subject to the following terms and conditions to which all who receive and rely on said Notice agree:

1. This Notice has been prepared with the skill and care ordinarily used by members of the engineering profession practicing under similar conditions at the same time and in the same locality.
2. This Notice reflects and is an expression of the Engineer's professional opinion.
3. This Notice has been prepared to the best of Engineer's knowledge, information, and belief as of the Notice Date.
4. This Notice is based entirely on and expressly limited by the scope of services Engineer has been employed by Owner to perform or furnish during construction of the Project (including observation of the Contractor's Work) under the Owner-Engineer Agreement, and applies only to facts that are within Engineer's knowledge or could reasonably have been ascertained by Engineer as a result of carrying out the responsibilities specifically assigned to Engineer under such Owner-Engineer Agreement.
5. This Notice is not a guarantee or warranty of Contractor's performance under the Construction Contract, an acceptance of Work that is not in accordance with the Contract Documents, including but not limited to defective Work discovered after final inspection, nor an assumption of responsibility for any failure of Contractor to furnish and perform the Work thereunder in accordance with the Contract Documents, or to otherwise comply with the Contract Documents or the terms of any special guarantees specified therein.
6. This Notice does not relieve Contractor of any surviving obligations under the Construction Contract, and is subject to Owner's reservations of rights with respect to completion and final payment.

Engineer

By *(signature)*: _____

Name *(printed)*: _____

Title: _____

This document is MODIFIED version of EJCDC® C-626, Notice of Acceptability of Work.
Copyright© 2018 National Society of Professional Engineers, American Council of Engineering Companies, and American Society of Civil Engineers. All rights reserved.

WARRANTY MEMORANDUM NO.: _____

Date Issued: _____

Project Name:		«Contract»
To:	Company:	«Contractor»
	Attention:	«Contact»
	Address:	«Address_Line_1»
		«Address_Line_2»

Date Deficiency Discovered: _____

Description, Location, and Impact of Deficiency:

Contractor personnel aware or notified of the deficiency:

Name, Title: _____

Date Notified: _____

CONTRACTOR: PLEASE RETURN A COPY OF THIS ENTIRE FORM WITH THE INFORMATION REQUESTED TO:

HRSD
DESIGN & CONSTRUCTION DIVISION
P.O. BOX 5911
VIRGINIA BEACH, VA 23471-0911

Date of Resolution: _____

Description of Remedy:

Section 40 - Master Specification Sections Overview

A. Introduction – Included in this publication are the below listed master specifications. These are to be used by the FIRM for Bid Document preparation for HRSD Design-Bid-Build project delivery along with other technical specification sections as developed by the FIRM. These sections are intended to be used primarily for HRSD interceptor system projects. The original versions of the HRSD provided specification sections are available in Microsoft Word format with Tracked Changes enabled on HRSD's homepage under *HRSD Design and Construction Standards*. The FIRM is to keep the Tracked Changes mode enabled when making suggested edits for the HRSD Project Manager's approval.

B. Listing of Master Specifications Sections.

Section	Title
01010	Summary of Work
01040	Coordination
01060	Special Conditions
01270	Measurement and Payment
01323	Record Documents
01340	Submittals
01520	Maintenance of Pipeline and Pumping Operations
01560	Environmental Protection and Special Controls
01650	Facility and System Start-Up
02510	Ductile Iron Pipe
02520	Polyvinyl Chloride Pipe
02530	High Density Polyethylene (HDPE) Pipe and Fittings
02531	Line Stops on Sanitary Sewer Force Main Systems
02610	Valves
02710	Contaminated Groundwater Management
02761	Television Inspection of Pipelines
02773	Ultrasonic Pipeline Inspection
02774	Condition Assessment Data Collection for Pipelines Being Repaired or to be Abandoned
03700	Concrete Rebuild
03800	Embedded Galvanic Anodes for Concrete Rebuild
07160	Reactive Waterproofing
07900	Joint Sealants and Expansion Joint Systems
09900	Protective Coatings
13110	Cathodic Protection

SECTION 01010
SUMMARY OF WORK

PART 1 - GENERAL

1.1 LOCATION AND SCOPE OF WORK:

A. The Work consists of, but is not limited to the following:
   1. Furnishing and installing pipelines, utilities, associated appurtenances, and all associated work to accomplish this project.
   2. *{Insert project specific scope of work}*

B. The Project is located at the following sites:
   1. {*Insert specific location of where work is to be performed*}.

C. The summary of the Work described in this Section is an overall summary of the responsibilities of the Contractor. It does not supersede the specific requirements of the other Contract Documents.

1.2 CONTRACT

A. The Work shall be constructed under one prime contract.

1.3 WORK BY OTHERS:

A. Work by Owner:
   1. Operation of all HRSD owned existing valves, air vents, and pump stations. Only HRSD personnel shall operate HRSD owned infrastructure.

B. Work by Municipal Utility Owners:
   1. Operation of all municipally owned existing valves, air vents, and pump stations shall be done by *{Insert responsible party}*.

C. Work by Private Utility Owners:
   1. Operation of all privately owned existing valves, air vents, and pump stations shall be done by *{Insert responsible party}*.

1.4 OWNER-FURNISHED PRODUCTS

A. {*Insert as applicable*}.

1.5 WORK SEQUENCE

A. The Contractor is responsible for the sequencing of activities as necessary to satisfactorily complete all project work within the Contract period. The Contractor's sequencing shall be presented in the Progress Schedule as specified in Article 2.05 of Section 00700 – General Conditions.

B. {*Insert additional info regarding work sequence*}.

C. Refer to Section 01520 - Maintenance of Pipeline and Pumping Operations for guidelines and requirements on the sequencing of Work for the connection of the new or relocated pipeline to the existing pipeline. {*modify accordingly based upon type of facility construction*}

1.6 CONTRACTOR'S USE OF PREMISES

A. Contractor shall abide by all provisions and requirements outlined in the {*insert applicable right-of-way permits for municipality*} pertaining to work within the public right-of-way.

B. Contractor is responsible for coordinating access and obtaining written authorization from all property owners to enter their sites.

C. Contractor shall assume full responsibility for the protection and safekeeping of materials furnished under this Contract and for materials stored on or off-site.
   1. Housekeeping – The Contractor is responsible for the overall housekeeping within their work areas.
      a. All exit doors, electrical panels, fire extinguishers; emergency eyewash/showers must have clear access maintained for emergencies.
      b. Trash and debris must not accumulate nor impede travel on designated walkways.
      c. Weeds and grass must be maintained during the project by the contractor in their designated areas so as not to create fire hazard or harborage of vermin.

D. Contractor shall immediately move any stored materials or equipment under Contractor's control that interfere with operations of the Owner, Locality, or property owner or are of public nuisance or potential harm to the public.

E. The Contractor shall not park, stage, or engage in any construction related activities on private property or outside of locality rights of way or HRSD easements without obtaining signed authorization from the property owner. The Contractor is responsible for securing all additional staging areas as required for the duration of the Contract. All costs, contingencies, permits, and agreements related to the acquisition and use of any proposed staging area shall be the Contractor's responsibility. Contractor is responsible for preparation and restoration of areas used to the satisfaction of the property owner. Parking facilities for Contractor's personnel shall also be the Contractor's responsibility.
   1. The Contractor shall provide HRSD a listing of all property owners and locations the Contractor negotiated staging areas with and copies of such signed authorizations by the property owner. The referenced authorization shall include a detailed description of work to occur on the private property and an expectation of restoration of the property and photos of the conditions prior to entry. The Contractor shall provide this information to HRSD prior to entering the site.

F. HRSD facilities locker rooms, toilets, and lunchrooms are off limits to the Contractor, subcontractors, and suppliers.

G. *{HRSD plant sites operate under a closed gate policy. The following general requirements shall apply. Contact the project manager for specific requirements at each plant site.}*
   1. *Security guards shall be provided if Treatment Plant gates are to be left open during normal work hours. The following are requirements and expectations of a security guard:*
      a. The Security Guard is expected to be alert and awake while guarding the open gate.
      b. The Security Guard is expected to check cars and trucks in and out of the plant site.
      c. If the Security Guard is not on duty the plant gate will be closed and secured.
      d. The Security Guard must turn unwanted site visitors away.

1.7 REGULATORY REQUIREMENTS

A. Comply with all Federal, State, and local laws, regulations, codes, and ordinances applicable to the Work.

B. Obtain all required permits, post required bonds and pay all required fees. These may include, but are not limited to:
   1. Right-of-Way Permit (for excavation within the {*insert Locality*} right-of-way): {*insert Locality's applicable Ordinance regarding Right-of-Way permits}{as an example: City of _____ Ordinance No. _____ requires a permit for excavation within the public right-of-way. The Contractor shall obtain a permit in accordance with the policies and standards set forth in the "City of _____ Right-of-Way Excavation and Restoration Manual" dated _____. Downloadable PDF copies of the manual and application form is available at _____*}.
   2. {*(Locality) Land Disturbing Permit, if applicable*}.
   3. {*VDOT Land Use Permit, if applicable. HRSD to pay for VDOT inspection costs if applicable*}.
   4. *{Insert additional permits required}*.

5. *{Highlight any permits requiring bonds or for which plan approval has been received. Identify what fees and who is responsible for. Include copies of VDOT, Railroad, Corps of Engineers or other permits which have been obtained for the project. Advise Contractor of existing HRSD permits and requirements. Contractor required to obtain storm water permit for construction activities. If fees cannot be reasonably determined prior to bid, consider direct reimbursement by change order.}*

1.8 ACCESS BY GOVERNMENT OFFICIALS

A. Authorized representatives of governmental agencies shall at all times have access to the Work where it is in preparation or progress. Contractor shall provide proper facilities for access and inspection.

1.9 NO UNAUTHORIZED WORK

A. The Contractor shall not undertake additional or 'side work' not defined within the Contract Documents for residents or businesses as part of or during the active HRSD project, without explicit written authorization from HRSD's Project Manager.

PART 2 - PRODUCTS – NOT USED

PART 3 - EXECUTION – NOT USED

END OF SECTION

SECTION 01040
COORDINATION

PART 1 - GENERAL

1.1 SUMMARY

A. Contractor shall be solely responsible for coordination of all of the Work. They shall supervise, direct and cooperate fully with all subcontractors, manufacturers, fabricators, suppliers, distributors, installers, testing agencies and all others whose services, materials or equipment are required to ensure completion of the Work within the Contract Time and in accordance with the Contract Documents.

B. Contractor shall cooperate with and coordinate their Work with the work of any other contractors, subcontractors, utility service companies or Owner's employees performing additional work related to the Project at the site.

C. Contractor shall maintain sufficient competent personnel, drafting equipment and supplies at the site for the purpose of preparing layout and coordination drawings. These drawings shall supplement the Contract Documents, and the working and Shop Drawings as necessary to correlate the work of various trades. Where such drawings are to be prepared by Subcontractors, Contractor will ensure that each Subcontractor maintains the required personnel and facilities at the site.

D. Contractor shall also coordinate their Work with the work of others under separate contract with HRSD or others parties to assure compliance with schedules.

E. Contractor shall attend and participate in all project coordination or progress meetings and report on the progress of all Work and compliance with schedules.

F. Contractor shall provide to HRSD's Project Manager a copy of any and all temporary land lease or easement negotiated between the Contractor and a property owner.

1.2 PUBLIC NOTIFICATION

A. The Contractor shall attend a coordination meeting with Owner, Engineer, and {*insert additional property owners*} personnel to discuss notification of property owners prior to the commencement of work. This meeting will be scheduled by the Engineer following issuance of the Notice to Proceed. Include parties affected by the work including locality representatives. A separate meeting may be required with adjacent property owners and impacted parties.

B. The Contractor shall coordinate with the Engineer and HRSD's Project Manager regarding HRSD notifications by letter or door hangers within the designated distribution areas for all easement owners, property owners, residents, businesses, and facilities that may be affected by the construction operations.

1. Contractor is responsible for coordinating schedule and shall provide a firm start schedule 45 calendar days prior to staging or entering the work site to allow for HRSD's Public Information Specialist (or other designated individual) to design all project notifications for the public.
2. Contractor to assist or distribute the HRSD, designed and approved, Project Introductory Notifications. Distribution of these notifications shall occur 30 calendar days in advance of any staging or commencement of work, to all easement owners, property owners, residents, businesses, and facilities that may be affected by the construction activities as within the project limits. The Contractor shall not be permitted to commence work until these distributions have been completed and confirmed by the Engineer or HRSD Project Manager.

3. Contractor shall for the entire duration of this project distribute project update notices (as designed and approved by HRSD) to all business, residence or facility within the upcoming work zone, 7 calendar days in advance of commencing work. The Contractor shall not be permitted to commence work until these distributions have been completed and confirmed by the Engineer or HRSD Project Manager.
4. Contractor will distribute Additional Notices (as designed and approved by HRSD) for work such as but not limited to: detours or street closures, service interruptions or shut offs, and night work a minimum of 48 hours prior to the scheduled work or as defined by the HRSD Public Information Specialist (or other designated individual). The Contractor shall not be permitted to commence work until these distributions have been completed and confirmed by the Engineer or HRSD Project Manager.
5. Contractor shall distribute project closeout notices to all easement owners, property owners, residents and businesses that may be affected by the construction operations by letter or door hangers within the project limits.
6. Contractor shall notify the HRSD Project Manager and HRSD Public Information Specialist (or other designated individual) of the scheduled dates for distributing each notice such that HRSD can perform timely website updates.
7. The Contractor shall keep a copy of each notice on site to provide or review with the public as needed.

1.3 OTHER PROJECTS {*if applicable*}

A. The {*insert specific project name*} are being constructed concurrently with the following projects:
   1. {*Insert other project name*}.
      a. {*Insert applicable resident project engineer, contact information, or projected schedule date for other projects*}.

1.4 OTHER UTILITY OWNERS

A. The Contractor shall coordinate with any private and public utility owners with facilities within the limits of the project and abide by all Miss Utility laws and notification requirements.

1.5 HRSD UNIFIER ENTERPRISE PROJECT MANAGEMENT SYSTEM

A. The Contractor will be required to utilize HRSD's Unifier Enterprise Project Management System for the duration of this project. This includes but is not limited to taking part in the required software training (generally a half day course at HRSD) and using the web-based software as intended to facilitate the management of the project. The project management software will be used to track and manage information such as meeting action items, shop drawing submittals, Request for Information (RFI), Work Change Directives, Contractor payment requests, Change Orders, specific documents as directed in the Contract Documents, and for all other financial related matters. Contractor will be obligated to initiate required workflow actions in a timely manner such that workflow and schedule are not adversely impacted.

PART 2 - PRODUCTS – NOT USED

PART 3 - EXECUTION – NOT USED

END OF SECTION

SECTION 01060
SPECIAL CONDITIONS

PART 1 - GENERAL

1.1 DRAWINGS AND CONTRACT DOCUMENTS FOR CONTRACTOR USE

A. Refer to General Conditions.

B. Additional documents after "no-charge" documents will be furnished to Contractor at cost.

1.2 PRECONSTRUCTION CONFERENCE

A. Date, Time and Location: Conference will be held after execution of the Contract and before construction is started at the site. Owner will fix the date, time and location of the meeting.

B. Contractor shall provide data required, contribute appropriate items for discussions and be prepared to discuss all items on agenda.

C. Required Attendance, as a minimum:
1. Owner's representatives.
2. Contractor's project manager and superintendent.
3. Contractor's Safety Officer
4. Subcontractor representatives whom Contractor may desire or Engineer may request to attend.
5. Engineer's representative.
6. Representative of {*locality and/or private utility owners*}.
7. Representatives of government agencies having a degree of control or responsibility, if available.

D. Engineer shall prepare agenda, preside at meeting, and prepare and distribute a transcript of proceedings to all parties.

E. Agenda
1. Agenda will include, but will not necessarily be limited to, the following:
   a. Designation of responsible personnel.
   b. Subcontractors.
   c. Coordination with other Contractors.
   d. Contractor's preliminary Construction Schedule. Note – the preliminary construction schedule to be used for initial project information on HRSD's construction web page.
   e. Use of Unifier (Unifier) Enterprise Project Management System.
   f. Preconstruction assessments and surveys.
   g. Public Notifications: coordination of schedule, planning and confirmation of distributions (30- and 7-day notices, additional specialty notices- 48 hours, and project closeout notice).
   h. Personal / Private Property Claims Process: notification and tracking; insurance update; and items discussed directly with the Contractor or Engineer's Resident Project Representative. Note – Contractor must notify Engineer, HRSD Project Manager and HRSD Real Estate Manager (or other designated individual) within 24 hours of knowledge of any incident. All claims are to be resolved by the Contractor within 60 days of the Contractor's notification of the incident.
   i. Processing of Shop Drawings and distribution of Submittals.
   j. Processing of Requests for Information (RFI), Field Orders, Work Change Directives, and Change Orders.
   k. Requirements for copies of Contract Documents.
   l. Processing and Schedule of Payments, Materials and Supplies.
   m. Use of premises.
   n. Land use agreements / signed authorizations obtained by Contractor.

o. Contractor's safety responsibilities.
p. Security.
q. Housekeeping.
r. Field Offices.
s. Record Drawings.
t. Critical work sequencing.
u. Develop emergency contact list for key individuals involved with project.
v. HRSD Operational Support Requirements.
w. Other project related items.
x. Virginia Clean Water Revolving Loan Fund (VCWRLF) and WIFIA requirements, if applicable.

1.3 TEMPORARY FACILITIES

A. Construction Offices:
1. All temporary construction offices and trailers (including contractor provided Engineer field offices) shall be sufficiently anchored to withstand 100 mile per hour wind. Review location and size of Engineer and Contractor office trailers with the Engineer.

B. Temporary Water:
1. The Contractor is responsible for obtaining at his own expense all water required for completion of the work.
2. Coordinate with the *{locality utility owner}* or other source for obtaining water.
3. The Contractor shall not operate any fire hydrants or spigots without coordinating with and obtaining the approval of its owner. Approved or provided backflow preventers or Reduced Pressure Zone (RPZ) devices with security deposits may be required by various localities.

C. Temporary Sanitary Facilities:
1. Provide self-contained, single-occupant toilet units of the chemical, aerated recirculation - type properly vented and fully enclosed in a fiberglass or other approved non-absorbent shell at each site.
2. Contractor responsible for coordination and all costs associated with waste disposal and upkeep of temporary sanitary facilities.

D. Telephone:
1. Provide a local area (757 area code) mobile phone number with both text and email capability for Superintendent throughout construction period.
2. Provide fax service for field office.
3. *{Two-way radios may be requested on certain projects to be on the same frequency as HRSD radios}*

E. Power:
1. The Contractor is responsible for obtaining at their own expense all temporary power necessary for completion of the work.
2. The Contractor shall coordinate with *{insert utility owner and/or other applicable source}* for obtaining temporary power.

F. Internet Service:
1. The Contractor is responsible for obtaining at their own expense sufficient internet capabilities to enable daily and necessary email and electronic submittals or transmittals throughout the duration of this construction phase.

1.4 DOCUMENTATION OF SITE CONDITIONS *{Engineer to specify requirements in the Contract Documents for Contractor based upon their determination of project zone of construction activity influence and direction from HRSD's Project Manager and HRSD Real Estate Manager (or other designated individual).}*

A. Documentation of Site Conditions as detailed in this section shall be completed and submitted to the Engineer for upload to HRSD's Unifier System for review 30 calendar days prior to mobilizing to the work site.

B. Contractor shall coordinate preconstruction photographing and video recording schedules with Owner, Engineer and *{insert locality owner as needed}*.

C. Contractor shall coordinate with the Engineer the documentation, through photographs and video recording, the existing conditions of the project site and structures along the project route to include but not limited to roadways, curb and gutter, medians, sidewalks, driveways and aprons, other utilities and structures within the construction activities zone.

D. Photographs:
   1. Digital preconstruction photographs of the project site. At a minimum, photographs are to be taken at each roadway intersection, all driveways, and a minimum of two pictures at the front of each property. Digital photos are to be labeled with the location, time and date that the photograph was taken.
   2. Furnish USB or external drive copy of digital photographs to the Engineer and Owner.

E. Video Recording:
   1. *{Specify format on jump or external drive if applicable}*

F. Property / Structure preconstruction assessments and surveys. *{Engineer, HRSD Project Manager and HRSD Real Estate Manager (or other designated individual) to determine if detailed structural assessment and documentation of visible defects to be required on certain projects or certain properties}*
   1. Examination of Adjacent Facilities and Properties: {*Engineer to specify requirements for Contractor based upon direction from HRSD's Project Manager and HRSD Real Estate Manager (or other designated individual)*}
      a. Before start of Work at the site, Contractor shall make a thorough examination of the existing conditions including buildings, structures and other improvements in the vicinity of the Work which could be damaged by construction activities. The Engineer or Engineer's Resident Project Representative shall accompany the Contractor during this examination.
      b. Periodic reexamination shall be performed to include cracks in structures, settlement, leakage and similar conditions.
      c. Record and submit documentation of observations made during examination inspections to the Engineer.

G. Vibration Monitoring Program. *{Engineer, HRSD Project Manager and HRSD Real Estate Manager (or other designated individual) to determine if a detailed vibration monitoring program baseline is required for certain properties and active monitoring as construction is ongoing in the vicinity.}*

1.5 PROGRESS MEETINGS

A. Date and Time:
   1. Regular monthly meetings or as designated by Owner.
   2. Other meetings are on call with 48 hours' notice of meeting.

B. Place:
   1. Contractor's field office or other predesignated place.

C. Engineer shall prepare agenda, preside at meetings, and prepare and distribute typed summary of proceedings.

D. Contractor shall provide data required and be prepared to discuss all items on agenda.

E. Minimum Attendance: Contractor's Project Manager and Superintendent shall attend. Contractor and subcontractor's representatives present for each party shall be authorized to act on their behalf.

F. Agenda:

1. Agenda will include but not necessarily be limited to the following:
   a. Revisions and/or corrections to previous meeting summaries.
   b. Administrative Items.
   c. New agenda items to be discussed.
   d. Public notifications coordination, planning and confirmation of distributions (30- and 7-calendar day notices, additional specialty notices- 48 hours, and project closeout notice).
   e. Land use agreements / signed authorizations obtained by Contractor.
   f. Public Relations Items: Property owner, locality or other lodged complaints concerns or issues, discussed directly with the Contractor or Engineer's Resident Project Representative.
   g. Status of project related damage claims.
   h. Updated overall construction schedule to completion (update required every 90-calendar days) for viewing and discussion.
   i. 4-week look ahead construction schedule updated and discussed each meeting.
   j. Progress since last meeting.
   k. Planned progress for next meeting and milestone work.
   l. Schedule assessment (delay or float). Assessment shall include:
      1) NTP Date
      2) Current Substantial and Final Completion dates
      3) Percent of time utilized compared to percent of work in place.
   m. Discussion of potential obstacles or hindrances.
   n. Shop drawings and review of shop drawing log.
   o. Coordination with Owner and other Contractors.
   p. Project safety.
   q. Testing.
   r. Subcontractors.
   s. Other business and planned visitors.
   t. Confirmation of up-to-date Record (As-Built) drawings
   u. For VCWRLF and/or WIFIA projects, the agenda shall include, but not limited to the following:
      1) Change Order summary to include issued and pending change orders.
      2) Confirmation of required site postings to include EEO Notices, OSHA Notices, Davis-Bacon Act Notice, Current Wage Determination and Additional Individual Wage Classifications as required.
      3) Quarterly WBE/MBE reports to include date of previous quarter submittal, log of submittals and confirmation that firms being reported are being utilized.
      4) Davis Bacon Certified Payrolls:

Required for both Prime and all Subcontractors.
Updated Exhibit "XX" – VCWRLF/WIFIA Tracking Log

5) American Iron and Steel (AIS) Requirements

Updated Exhibit "XX" – VCWRLF/WIFIA Tracking Log

6)

1.6 PROTECTION OF PUBLIC PROPERTY

A. Contractor shall coordinate with the Engineer and HRSD's Project Manager and make satisfactory and acceptable arrangements with the owner of, or the agency or authority having jurisdiction over, any damaged property concerning its repair, replacement, or payment of costs incurred in connection with any damage.

B. Contractor shall keep fire hydrants and water control valves free from obstruction and available for use at all times.

C. Contractor shall keep HRSD and Locality owned sewer facilities free from obstruction and available for use at all times.

D. Contractor shall coordinate with the Engineer to notify all utility owners who may be affected by the construction operation at least seven (7) calendar days in advance of such work. Before exposing any utility, the utility having jurisdiction shall grant permission and may oversee the operation. Should service of any utility be interrupted due to the Contractor's operation, the proper authority shall be notified immediately. Contractor shall cooperate with the said authority or utility owner in restoring the service as promptly as possible and shall bear any costs incurred.

E. In areas where the Contractor's operations are adjacent to or near a utility and such operations may cause damage which might result in considerable expense, loss, and inconvenience, the operation shall be suspended until all arrangements necessary for the protection thereof have been made by the Contractor and verified by the Engineer or Engineer's Resident Project Representative.

1.7 HISTORICAL AND ARCHAEOLOGICAL CONDITIONS

A. If during the course of construction, evidence of deposits of historical or archeological interest is found, the Contractor shall cease operations affecting the find and shall immediately notify the Engineer and HRSD's Project Manager.
   1. No further disturbance of the deposits shall ensue until the Contractor has been notified by Owner that Contractor may proceed.
   2. Owner will issue a notice to proceed after appropriate authorities have surveyed the find and made a determination to Owner.
   3. Compensation to the Contractor, if any, for lost time or changes in construction resulting from the find, shall be determined in accordance with changed or extra work provisions of the Contract Documents.

1.8 SOIL CONTAMINATION

A. If during the course of construction, evidence of hydrocarbon or other soil contamination is found, the Contractor shall cease operations affecting the find and shall immediately notify the Engineer and HRSD's Project Manager.
   1. No further disturbance of the affected area shall ensue until the Contractor has been notified by Owner that Contractor may proceed.
   2. Owner will issue a notice to proceed after appropriate authorities have surveyed the find and made a determination to Owner.
   3. Compensation to the Contractor, if any, for lost time or changes in construction resulting from the find, shall be determined in accordance with changed or extra work provisions of the Contract Documents.

1.9 LINES AND GRADES

A. Construct all Work to the lines, grades, and elevations indicated on the Drawings. Remove and reconstruct improperly constructed Work.

B. Provide all additional survey, layout, and measurement work required.
   1. Work to be performed by a qualified professional engineer or registered land surveyor.
   2. Locate, verify and protect control points prior to starting site Work, and preserve all permanent reference points during construction.
      a. Make no changes or relocations without prior written notice to Engineer.
      b. Report immediately to Engineer when any reference point is lost or destroyed or requires relocation because of necessary changes in grades or locations. The costs for any and all reestablishment of control work damaged by the Contractor shall be Contractor's responsibility.
   3. Establish lines and levels, locate and lay out by instrumentation and similar appropriate means.
   4. Maintain a complete, accurate log of all control and survey work as it progresses.
   5. On request of Engineer, submit documentation to verify accuracy of field engineering work.

1.10 WORK HOURS

A. Comply with General Conditions. In addition to the General Condition requirements, no work outside of the hours of 7 a.m. to 5 p.m., Monday through Friday, or on legal holidays will be permitted without Owner's written consent. The Contractor shall have a supervisor present whenever work is taking place, including when only sub-contractor work is being performed.

1. The following are legal holidays for the Owner: *{review each calendar year}*
   a. New Year's Day (January 1st)
   b. Martin Luther King, Jr. Day (3rd Monday in January).
   c. George Washington Day (3rd Monday in February).
   d. Memorial Day (Last Monday in May).
   e. Juneteenth (June 19th).
   f. Independence Day (July 4th).
   g. Labor Day (1st Monday in September).
   h. Columbus Day (October 9th)
   i. Election Day (1st Tuesday in November)
   j. Veteran's Day (November 11th).
   k. Thanksgiving Day (4th Thursday in November).
   l. Friday after Thanksgiving Day.
   m. Christmas Day (December 25th).

B. The Contractor shall obey the work hour provisions of any {*locality permits*} obtained for the Work.

C. The Contractor shall refer to the Traffic Control Plans / Maintenance of Traffic in the Drawings for work hour restrictions related to construction at specific locations.

D. {Insert any planned or known work or special events occurring within the project limits that may affect Contractor scheduling, at no additional cost to HRSD.}

E. {Insert any time or date restrictions from any school on which work will occur on school property. When possible, this work shall occur while school is not in session, during overnight hours, weekends or school closures and holidays.}

1.11 HRSD REGULATORY REPORTING REQUIREMENTS FOR SPILLS

A. During the course of construction, project spills from force mains, manholes, etc. may occur. These events must be reported to HRSD personnel and the Engineer's Resident Project Representative immediately. The Contractor shall also contact the appropriate Operations Center Coordinator. The following telephone numbers are staffed as listed below:

1. {Insert appropriate HRSD contacts and phone numbers}
   a. North Shore Operations: (757) 833-1720 [5:30 AM to 4:00 PM Monday through Thursday]
   b. South Shore Operations: (757) 460-7072 [5:30 AM to 4:15 PM Monday through Thursday]

B. If the Contractor has a problem outside of these business hours, then one of the following personnel should be notified:

1. {Insert and/or delete to list appropriate HRSD contacts and phone numbers}
   a. North Shore Duty Supervisor (757) 613-6600
   b. North Shore Duty Foreman (757) 613-6601
   c. South Shore Duty Supervisor (757) 248-8118
   d. South Shore Duty Technician (757) 248-8120

C. This procedure shall be followed for all spills. Failure to report a spill can lead to enforcement action by the Virginia Department of Environmental Quality (VDEQ).

PART 2 - PRODUCTS (NOT USED)

PART 3 - EXECUTION (NOT USED)

END OF SECTION

SECTION 01270
MEASUREMENT AND PAYMENT

PART 1 - GENERAL

1.1 SUMMARY

A. The items listed in Part 1.3 below refer to and are the same pay items listed in the Bid Form. They constitute all of the pay items for the completion of the Work.

B. The unit bid prices will be deemed to include an amount considered by Contractor to be adequate to cover Contractor's overhead and profit.

C. Refer to the General Conditions for provisions for Payments to Contractor and Changes in Contract Price.

1.2 INCIDENTAL ITEMS

A. There are numerous incidental items of work that are required to complete the Project. While these items may not be specifically mentioned or illustrated by the Contract Documents and there may be no specific pay items listed for them, the Contractor will be required to perform those incidental tasks that can be anticipated through inspection of the Contract Documents, inspection of the construction areas, and experience in this class of construction.

B. Items considered incidental work shall not be measured for payment or paid for as such unless specified as unit price by items on the Bid Form. These items and their costs shall be included in the unit prices or lump sum bid for the pay items unless bid separately. Incidental items may include but are not limited to the following:
1. Permits.
2. Material royalties.
3. Temporary utility connections.
4. Construction entrances.
5. Clearing and grubbing.
6. Stakeout and surveying.
7. Traffic control / Maintenance of Traffic *{Engineer to determine if incidental or separate pay item for each project}*
8. Site security.
9. Temporary lighting.
10. Temporary erosion and sediment control.
11. Locating existing utilities (excluding locations designated on the plans).
12. Sheeting and shoring *{Engineer to determine if incidental or separate pay item for each project}*
13. Excavation.
14. Dewatering of trenches, including use of well point system if required. *{Engineer to determine if dewatering permitting, discharge, treatment, monitoring and reporting are incidental. If determined to not be incidental, Engineer to include measurement and payment item separately for the work}*
15. Bedding materials as detailed (excluding materials required to replace trench undercutting).
16. Handling, placing, manipulating, and compacting excavated material suitable as backfill material.
17. Pipe linings and coatings.
18. Temporary pipe thrust restraint *{This item is for temporary pipe restraint / blocking at tie-in connections while pipe is exposed and under operating pressure}*
19. Polyethylene encasement.

20. Maintenance of pipeline operations during pipe shutdowns, including pumping, hauling, and disposing of sewage. *{Engineer to determine if item is incidental to the project. If determined not to be incidental, Engineer to include measurement and payment item separately for the work.}*
21. Tracer wire, marking tape, and/or marker balls.
22. Testing materials, equipment, media, and execution.
23. Offsite disposal of surplus and unsuitable excavated material.
24. Offsite disposal of pipe and appurtenances removed to accommodate the proposed pipe.
25. Daily site cleanup.
26. Allaying of dust.
27. Relocating or modifying existing miscellaneous items.
28. Temporary pavement.
29. Site restoration, including sidewalk and curb and gutter replacement (excluding permanent pavement restoration, milling, and overlay).
30. Site cleanup.
31. Topsoil and seeding.
32. Recordkeeping.
33. All other items required to complete the project, for which pay items are not provided, will not be measured nor paid for as such, but their cost shall be included in the price for other items of work.

1.3 BID ITEMS *{Engineer to review HRPDC Regional Construction Standards measurement and payment items and use appropriate items}*

A. Item 1 – Mobilization, complete {*Delete if not applicable*}.
   1. Measurement: Item will not be measured separately but paid for on a lump sum basis. The lump sum bid amount for mobilization shall not exceed <u>6% of the Total Bid amount</u>. Demobilization shall not be paid as a separate item.
   2. Basis of Payment: Payment shall be made at the Contract Lump Sum Price.

B. Item 2 – Horizontal Directional Drill (HDD), Bore & Jacked Casing, or Microtunneling {*insert description*}.
   1. Measurement: Item will not be measured separately but paid for on a lump sum basis.{*insert description*}.
   2. Incidental Items: {*insert description*}.
      a. {*List any unique work items*}.
      b. {*List any unique work items*}.
   3. Basis of Payment: Payment shall be made at the Contract Lump Sum Price for each successfully completed crossing. {*insert description*}.

C. Item 3 – {*insert description*}.
   1. Measurement: {*insert description*}.
   2. Incidental Items: {*insert description*}.
      a. {*List any unique work items*}.
      b. {*List any unique work items*}.
   3. Basis of Payment: {*insert description*}.

D. Item 4 – {*insert description*}.
   1. Measurement: {*insert description*}.
   2. Incidental Items: {*insert description*}.
      a. {*List any unique work items*}.
      b. {*List any unique work items*}.
   3. Basis of Payment: {*insert description*}.

PART 2 - PRODUCTS (NOT USED)

PART 3 - EXECUTION (NOT USED)

END OF SECTION

SECTION 01323
RECORD DOCUMENTS

PART 1 - GENERAL

1.1 DESCRIPTION OF WORK

A. Contractor shall maintain and provide the Owner with project record documents as specified below.

B. Maintenance of Documents:
   1. Maintain in clean, dry, legible condition on site complete sets of the following:
      a. Contract Drawings.
      b. Specifications.
      c. Addenda.
      d. Approved Shop Drawings.
      e. Photographs.
      f. Change Orders, Modifications of Contract, Field Orders.
      g. Test Records.
      h. Survey Data.
      i. Approved permits
      j. All other documents pertinent to Contractor's Work.
   2. Make documents available at all times for inspection by Engineer.
   3. Record documents shall not be used for any other purpose and shall not be removed from the office without Owner's approval.

C. Marking:
   1. Use the following color code unless otherwise approved by the Engineer:
      a. Deletions: Green.
      b. Additions: Red.
      c. Notes and Comments: Blue.

D. Recording:
   1. Label each document "PROJECT RECORD" in 2-inch high printed letters.
   2. Keep record documents current and updated at least weekly.
   3. Do not permanently conceal any Work until required information has been recorded.
   4. Contract Drawings - Legibly mark to record actual construction including:
      a. A written record of actual ground and top of pipe elevations at each joint and at all fittings, valves, air vents and connection points and at all horizontal and vertical deviations from the construction plan set.
      b. Records kept in a digital spreadsheet containing X,Y,Z coordinates for top of pipe elevations at each joint and at all fittings, valves, air vents and connection points. Accuracy must be sub-foot for horizontal (X, Y) and 0.1-ft for vertical (Z). An updated spreadsheet must be provided with each Contractor pay application. The Digital spreadsheet shall be directly compatible with ArcGIS software without requiring any additional re-formatting, such as a Shapefile , File Geodatabase, or properly formatted Excel or CSV files.
      c. *{For Horizontal Directional Drilling (HDD) project, digital records of X, Y, Z coordinates for the center of the installed pipeline collected via a tethered instrument (SmartProbe or equivalent) shall be pulled through the new HDD pipe unless otherwise approved by HRSD's Project Manager}.*
      d. The number of turns required to fully open or close all installed valves. The number of turns shall be determined in the presence of an Owner's representative prior to installation.
      e. Horizontal and vertical location of underground utilities and appurtenances encountered referenced to permanent surface improvements.

f. Field changes of dimensions and details.
g. Changes made by Change Order or Field Order.
h. Details not on original Contract Drawings.
i. Changes of different method of construction.
j. Use of different products not specified

5. Specifications and Addenda - Legibly mark up each Section to record:
   a. Changes made by Change Order or Field Order.
   b. Other matters not originally specified.
6. Shop Drawings - Maintain as record documents and legibly annotate drawings to record changes made after review.
7. Record Documents will be reviewed by the Engineer and the Contractor monthly and failure to keep documents accurate and current will be basis for the Owner to withhold the Contractor's monthly payment in partial or full.
8. Valve Guides for in-line isolation valves, air vents, cathodic protection test boxes, tracer wire test boxes, and other vaults, boxes, or manholes shall be documented with swing ties, reviewed by the Engineer, and delivered to HRSD prior to HRSD operating any of these newly installed facilities.

E. Record Drawings:
1. Record Drawings shall reflect completion of the installation of all materials, piping, and other work by the Contractor. The drawings shall show the Work in plan and sections as required for clarity with reference dimensions and elevations for complete record drawings.
   a. Interim Record Drawings in the form of redlined plan and profile sheets shall be provided to the Engineer a minimum of 1 business week prior to a planned tie-in. No tie-ins with active systems will be allowed unless these drawings are submitted.
      1) The pre-substantial completion version digital spreadsheet containing X,Y,Z coordinates of the installed pipe and all appurtenances as detailed in Paragraph 1.1.D.4.b of this Section to be submitted as part of the Interim Record Drawings submittal requirements.
   b. Final Record Drawings in the form of redlined plans shall be provided to the Engineer at the time a request for Final Inspection is made.
      1) The final completion version digital spreadsheet containing X,Y,Z coordinates of the installed pipe and all appurtenances as detailed in Paragraph 1.1.D.4.b of this Section to be submitted as part of the Final Record Drawings submittal requirements.
2. The Contract Drawings may be used as a starting point in developing these drawings. Subcontractor drawings may be included in this drawing package. The drawing package must be fully integrated and include the necessary cross references between drawings.
3. The Contractor shall record and provide to the Engineer a written record of the following:
   a. Virginia State Plane coordinates for all valves, air vents, manholes, vaults, and horizontal pipeline bends.
   b. Actual ground and top of pipe elevations at each pipe joint and at all fittings, valves, air vents, manholes, vaults, pressure sensor assemblies, and connection points. All vertical elevations shall utilize the NAVD 88 datum.
   c. The recording of this information shall be performed at the time of installation of the associated pipeline and appurtenances.

F. Valve Guides:
1. Valve Guides shall include swing ties to physical features, valve manufacturer, number of valve turns open/close, HRSD infrastructure ID. A sample Valve Guide is included as *Exhibit A* to this Section. *{Engineer to include an example from the HRSD Design and Construction Standards, Section 6 – Drawings, Record Drawings, and Valve Guides}*
   a. Interim Valve Guides shall be developed by the Contractor and delivered to the Engineer for review a minimum of 5 business days prior to a planned tie-in. No tie-ins with active systems will be allowed unless these drawings are submitted and complete.
   b. Final Valve Guides shall be updated and delivered to the Engineer prior to the Final Inspection.

G. Submittal:

1. At the completion of the Project, deliver final documents to the Engineer. *{Engineer to coordinate with HRSD Project Manager the submittal of either paper or digital form.} Place all letter-sized material in a three-ring binder. Bind Contract drawings and shop drawings in rolls of convenient size for ease of handling.*
2. Accompany the submittal with a transmittal letter *{in duplicate}* containing the following:
   a. Date.
   b. Project title and number.
   c. Contractor's name and address.
   d. Title and number of each record document.
   e. Certification that each document as submitted is complete and accurate.
   f. Signature of Contractor.

PART 2 - PRODUCTS (NOT USED)

PART 3 - EXECUTION (NOT USED)

END OF SECTION

SECTION 01340
SUBMITTALS

PART 1 - GENERAL

1.1 SUMMARY

A. Section includes:
   1. Mechanics and administration of the submittal process for:
      a. Shop Drawings.
      b. Copies of Contractor acquired work permits (locality, State, Federal)
      c. Miscellaneous submittals.
   2. General content requirements for Shop Drawings.

1.2 DEFINITIONS

A. Shop Drawings:
   1. See General Conditions.
   2. Product data are Shop Drawing information.

B. Copies of Contractor acquired work permits
   1. Provide a copy to HRSD for all permits obtained granting permission by the locality, State, and/or Federal to perform the work identified in the Bid Documents.

C. Miscellaneous Submittals:
   1. Submittals other than Shop Drawings.
   2. Representative types of miscellaneous submittal items include but are not limited to:
      a. Utility test hole reports.
      b. Construction schedule.
      c. Soil compaction and pressure test reports.
      d. Manufacturer's installation certification letters.
      e. Warranties.
      f. Construction photographs *{and video if applicable}*.
      g. Survey data.
      h. Schedule of values.
      i. Subcontractor's qualifications.
      j. Sketches and drawings of equipment.
      k. Interim and Final Valve Guides (refer to Section 01323)
      l. Interim and Final Record Drawings (refer to Section 01323)
      m. Written procedures for implementing portions of the work.
      n. X,Y,Z Table for buried pipe installation (submitted monthly with Contractor's payment request).
      o. Virginia Clean Water Revolving Loan Fund (VCWRLF) American Iron & Steel (AIS) certification *{if applicable}*

D. Unifier Enterprise Project Management System
   1. See Unifier Management System User Manual
   2. *{Engineer to specify and provide details on any collaboration and document management system other than Oracle Unifier (Unifier) Enterprise Project Management System to be used. These alternative systems must be pre-approved by HRSD's Project Manager before developing the Bid Document}*

1.3 SUBMITTAL SCHEDULE

A. Schedule of Shop Drawings:
   1. Submitted within {*insert number of days*} days of receipt of Notice to Proceed.

2. Account for multiple transmittals under any specification section where partial submittals will be transmitted.

B. Shop Drawings: Submit well in advance of the need for the material or equipment for construction and with ample allowance for the time required to make delivery of material or equipment after data covering such is approved. *{Engineer to specify time durations needed for each type of approval so no confusion on what is meant by "well in advance" and "ample allowance"}*. Contactor shall assume the risk for all materials or equipment which is fabricated or delivered prior to the approval of Shop Drawings. Materials or equipment will not be included in periodic progress payments until approval thereof has been obtained in the specified manner.

C. Copies of Contractor acquired permits: Copies of all construction related permits to be furnished to HRSD within 14 calendar days of obtaining a permit.

1.4 PREPARATION OF SUBMITTALS

A. General:
1. All submittals shall be either created in Portable Document Format (PDF) or scanned from paper copies into PDF files.
2. All submittals and all pages of all copies of a submittal shall be completely legible.
3. Submittals which, in the Engineer's sole opinion, are illegible will be returned without review.

B. Shop Drawings:
1. Limit scope of any submittal and letter of transmittal to one specification section.
2. Numbering letter of transmittal:
   a. Include as prefix the specification section number followed by a series number, "-xx", beginning with "01" and increasing sequentially with each additional transmittal.
   b. If more than one submittal under any specification section, assign consecutive series numbers to subsequent transmittal letters.
3. Describing transmittal contents:
   a. Provide listing of each component or item in submittal capable of receiving an independent review action.
   b. Identify for each item:
      1) Manufacturer and Manufacturer's drawing or data number.
      2) Unique page numbers for each page of each separate item.
   c. When submitting "or-equal" items that are not the products of named manufacturers, include the words "or-equal" in the item description.
4. Contractor stamping:
   a. General:
      1) Contractor's review and approval stamp shall be applied either to the letter of transmittal or a separate sheet preceding each independent item in the submittal.
         a) Contractor's signature and date shall be required. {*Engineer to coordinate with HRSD's Contract Specialist regarding requirements for hand signatures verses digital signatures}*.
         b) Shop Drawing submittal stamp shall read "(Contractor's Name) has satisfied Contractor's obligations under the Contract Documents with respect to Contractor's review and approval as stipulated under General Conditions."
         c) Letters of transmittal may be stamped only when the scope of the submittal is one item.
      2) Submittals containing multiple independent items shall be prepared with an index sheet for each item listing the discrete page numbers for each page of that item, which shall be stamped with the Contractor's review and approval stamp.
         a) Individual pages or sheets of independent items shall be numbered in a manner that permits Contractor's review and approval stamp to be associated with the entire contents of a particular item.

b. Electronic stamps:
   1) Contractor may electronically embed Contractor's review and approval stamp to either the letter of transmittal or a separate index sheet preceding each independent item in the submittal.
   2) Contractor's signature and date on electronically applied stamps shall be original ink signature. *{Engineer to coordinate with HRSD's Contract Specialist regarding requirements for hand signatures verses digital signatures}*

5. Resubmittals:
   a. Number with original root number and a suffix letter starting with "A" on a (new) transmittal form.
   b. Do not increase the scope of any prior transmittal.
   c. Account for all components of prior transmittal.
      1) If items in prior transmittal received "A" or "B" Action code, list them and indicate "A" or "B" as appropriate.
         a) Do not include submittal information for items listed with prior "A" or "B" Action in resubmittal.
      2) Indicate "Outstanding-To Be Resubmitted at a Later Date" for any prior "C" or "D" Action item not included in resubmittal.
         a) Obtain Engineer's approval to exclude items.
6. All submittals shall be submitted through the Unifier System. Please refer to the Unifier User Guide to see the Business Process from start to finish. *{Engineer to specify if an alternate collaboration and document management system is requested to be used. Advanced approval to use a system other than or in addition to Unifier shall be pre-approved by HRSD's Project Manager before development of Bid Document}*.
7. Provide clear space (3 IN SQ) for Engineer stamping of each component defined in PREPARATION OF SUBMITTALS – Contractor Stamping.
8. Contractor shall not use red color for marks on transmittals.
9. Transmittal contents:
   a. Coordinate and identify Shop Drawing contents so that all items can be easily verified by the Engineer.
   b. Identify equipment or material use, tag number, drawing detail reference, weight, and other project specific information.
   c. Provide sufficient information together with technical cuts and technical data to allow an evaluation to be made to determine that the item submitted is in compliance with the Contract Documents.
   d. Submit items such as equipment brochures, cuts of fixtures, product data sheets or catalog sheets.
      1) Indicate exact item or model and all options proposed.
   e. When a Shop Drawing submittal is called for in any specification section, include as appropriate, scaled details, sizes, dimensions, performance characteristics, test data, installation instructions, storage and handling instructions, controls, weights and other pertinent data in addition to information specifically stipulated in the specification section.
      1) Arrange data and performance information in format similar to that provided in Contract Documents.
      2) Provide, at minimum, the detail specified in the Contract Documents.
   f. If proposed equipment or materials deviate from the Contract Drawings or Specifications in any way, clearly note the deviation and justify the said deviation in detail in a separate letter immediately following transmittal sheet.

C. Operation and Maintenance Manuals: {*delete this part if it does not apply*}
   1. Owner's use of manufacturer's Operation and Maintenance materials:
      a. Materials are provided for Owner's use, reproduction and distribution as training and reference materials within Owner's organization.

1) Applicable to hard copy *{Engineer to coordinate with HRSD Project Manager if paper copies are needed}* or electronic media.
2) Applicable to materials containing copyright notice as well as those with no copyright notice.

b. Notify manufacturer of this intended use of materials provided under the Contract.

2. Number each Operation and Maintenance Manual transmittal with the original number of the associated Shop Drawing.
   a. Identify resubmittals with the original number plus a suffix letter starting with "A."
3. Submittal format:
   a. Interim submittals: Submit PDF format through the Unifier Enterprise Project Management system until manual is approved. *{Engineer to specify if an alternate collaboration and document management system is requested to be used. Advanced approval to use a system other than or in addition to Unifier shall be pre-approved by HRSD's Project Manager before development of Bid Document}*
   b. Final submittals:
      1) Within 30 days of receipt of approval, submit two (2) electronic copies on Compact Disc (CD-ROM) in Portable Document Format (PDF). *{verify with HRSD if submittals are to be submitted electronically via Unifier or other preapproved collaboration and document management system in addition to transmitted CDs}*
         a) Compact discs to be secured in jewel cases.
      2) Electronic copies will be reviewed for conformance with the approved electronic copy (PDF) requirements of this Specification.
      3) Non-conforming CDs will be returned with comments.
         a) Provide final CDs within 30 days of receipt of comments.
4. Electronic copy submittals:
   a. Electronic copies of the approved paper copy Operation and Maintenance Manuals are to be produced in Adobe Acrobat's Portable Document Format (PDF) Version {5.0} or higher.
   b. Do not password protect and/or lock the PDF document.
   c. Create one (1) PDF document (PDF file) for each equipment O&M Manual.
   d. Drawings or other graphics must be converted to PDF format and made part of the one (1) PDF document.
      1) Scanning to be used only where actual file conversion is not possible.
   e. Rotate pages that must be viewed in landscape to the appropriate position for easy reading.
   f. Images only shall be scanned at a resolution of 300 dpi or greater.
      1) Perform Optical Character Recognition (OCR) capture on all images.
      2) Achieve OCR with the "original image with hidden text" option.
      3) Word searches of the PDF document must operate successfully to demonstrate OCR compliance.
   g. Create bookmarks in the navigation frame, for each entry in the Table of Contents/Index.
      1) Normally three (3) levels deep (i.e., "Chapter," "Section," "Sub-section").
   h. Thumbnails must be generated for each PDF file.
   i. Set the opening view for PDF files as follows:
      1) Initial view: Bookmarks and Page.
      2) Magnification: Fit in Window.
      3) Page layout: Single page.
      4) Set the file to open to the cover page of the manual with bookmarks to the left, and the first bookmark linked to the cover page.
   j. All PDF documents shall be set with the option "Fast Web View" to open the first pages of the document for the viewer while the rest of the document continues to load.
   k. File naming conventions:

1) File names shall use a "ten dot three" convention (XXXXX-YY-Z.PDF) where XXXXX is the Specification Section number, YY is the Shop Drawing Root number and Z is an ID number used to designate the associated volume.
    a) Example 1:
        (1) Two (2) pumps submitted as separate Shop Drawings under the same Specification Section:
            (a) Pump 1 = 11061-01-1.pdf.
            (b) Pump 2 = 11061-02-1.pdf.
    b) Example 2:
        (1) Control system submitted as one (1) Shop Drawing but separated into two (2) O&M volumes:
            (a) Volume 1 = 13440-01-1.pdf.
            (b) Volume 2 = 13440-01-2.pdf.

l. Labeling:
    1) As a minimum, include the following labeling on all CD-ROM discs and jewel cases:
        a) Project Name.
        b) Equipment Name and Project Tag Number.
        c) Project Specification Section.
        d) Manufacturer Name.
        e) Vendor Name.

m. Binding:
    1) Include labeled CD(s) in labeled jewel case(s).
        a) Bind jewel cases in standard three-ring binder Jewel Case Page(s), inserted at the front of the Final paper copy submittal.
        b) Jewel Case Page(s) to have means for securing Jewel Case(s) to prevent loss (e.g., flap and strap).

5. Operation and Maintenance Manuals for Materials and Finishes:
    a. Building Products, Applied Materials and Finishes:
        1) Include product data, with catalog number, size, composition and color and texture designations.
        2) Provide information for re-ordering custom manufactured products.
    b. Instructions for Care and Maintenance:
        1) Include manufacturer's recommendations for cleaning agents and methods, precautions against detrimental agents and methods and recommended schedule for cleaning and maintenance.
    c. Moisture Protection and Weather Exposed Products:
        1) Include product data listing, applicable reference standards, chemical composition, and details of installation.
        2) Provide recommendations for inspections, maintenance and repair.
    d. Additional requirements as specified in individual product specifications.

6. Operation and Maintenance Manuals for Equipment and Systems:
    a. Submission of Operation and Maintenance Manuals for equipment and systems is applicable but not necessarily limited to:
        1) Major equipment.
        2) Equipment powered by electrical, pneumatic or hydraulic systems.
        3) Specialized equipment and systems including instrumentation and control systems and system components for HVAC process system control.
        4) Valves and water control gates.
    b. Equipment and Systems Operation and Maintenance Manuals shall include, but not necessarily be limited to, the following completed forms and detailed information, as applicable:
        1) Fully completed copies (in Excel format) of the associated Equipment Record(s), Exhibits C1, C2 and C3. Equipment Record(s) shall be included under the first tab following the Table of Contents of each Operation and Maintenance Manual.

a) Each section of the Equipment Record must be completed in detail.
   (1) Simply referencing the related manual for nameplate, maintenance, spare parts or lubricant information is not acceptable.
b) For equipment items involving components or subunits, a fully completed Equipment Record Form is required for each operating component or subunit.
c) Submittals that do not include the associated Equipment Record(s) will be rejected without further content review.
d) Utilize digital copies (in Excel format) of Exhibits C1, C2, and C3 to transmit the Equipment Record(s). {*Engineer to verify these referenced exhibits are included and appended to this section*}.

2) Equipment function, normal operating characteristics, limiting operations.
3) Assembly, disassembly, installation, alignment, adjustment, and checking instructions.
4) Operating instructions for start-up, normal operation, control, shutdown, and emergency conditions.
5) Lubrication and maintenance instructions.
6) Troubleshooting guide.
7) Parts lists:
   a) Comprehensive parts and parts price lists.
   b) A list of recommended spare parts.
   c) List of spare parts provided as specified in the associated Specification Section.
8) Outline, cross-section, and assembly Drawings; engineering data; and electrical diagrams, including elementary diagrams, wiring diagrams, connection diagrams, word description of wiring diagrams and interconnection diagrams.
9) Test data and performance curves.
10) As-constructed fabrication or layout Drawings and wiring diagrams.
11) Instrumentation or tag numbers assigned to the equipment by the Contract Documents are to be used to identify equipment and system components.
12) Additional information as specified in the associated equipment or system Specification Section.

D. Copies of Contractor acquired permits:
   1. Provide a single PDF version of each permit acquired granting construction rights. Each permit to be transmitted to the Engineer for uploading into the HRSD's Unifier system.

E. Virginia Clean Water Revolving Loan Fund (VCWRLF) and WIFIA Submittals:
   1. List of American Iron and Steel (AIS) required products. Submittal shall include:
      a. Product description.
      b. Material quantity and value.
   2. American Iron and Steel (AIS) certificates with the following requirements:
      a. Project name
      b. Product name
      c. Fabrication City/State
      d. Required Signature
      e. References relevant AIS Requirement
   3. Davis Bacon Certified Payroll shall be submitted monthly for both Prime and Subcontractor employees.

F.

G. Miscellaneous Submittals:
   1. Prepare in the format and detail specified in specification requiring the miscellaneous submittal.

1.5 TRANSMITTAL OF SUBMITTALS

A. Shop Drawings:
   1. Transmit all submittals through HRSD's Unifier System
   2. Utilize digital copies of attached Exhibit "A" to transmit all Shop Drawings to {*insert Engineer's name*}{*Engineer to verify referenced Exhibit A is included and appended to this section*}.
   3. All submittals must be from Contractor.
      a. Submittals will not be received from or returned to subcontractors.
   4. Provide submittal information defining specific equipment or materials utilized on the project.
      a. Generalized product information, not clearly defining specific equipment or materials to be provided, will be rejected.

B. Calculations required in the individual specifications are required for For-Information Only.

C. Miscellaneous Submittals:
   1. Transmit under Contractor's standard letter of transmittal or letterhead.
   2. Submit as specified in individual specification section.

D. Expedited Return Delivery: *{delete this paragraph or revise as necessary if exclusively electronic submittals}*
   1. Include prepaid express envelope or air bill in submittal transmittal package for any submittals Contractor expects or requires express return mail.
   2. Inclusion of prepaid express envelope or air bill does not obligate Engineer to conduct expedited review of submittal.

E. Fax transmittals are not acceptable.

1.6 ENGINEER'S REVIEW ACTION

A. Shop Drawings:
   1. Items within transmittals will be reviewed for overall design intent and will receive one of the following actions:
      a. A - FURNISH AS SUBMITTED.
      b. B - FURNISH AS NOTED {*By Engineer*}.
      c. C - REVISE AND RESUBMIT.
      d. D - REJECTED.
      e. E - ENGINEER'S REVIEW NOT REQUIRED.
   2. Submittals received will be initially reviewed to ascertain inclusion of Contractor's approval stamp.
      a. Submittals not stamped by the Contractor or stamped with a stamp containing language other than that specified herein will not be reviewed for technical content and will be returned without any action.
   3. In relying on the representation on the Contractor's review and approval stamp, Owner and Engineer reserve the right to review and process poorly organized and poorly described submittals as follows:
      a. Submittals transmitted with a description identifying a single item and found to contain multiple independent items:
         1) Review and approval will be limited to the single item described on the transmittal letter.
         2) Other items identified in the submittal will:
            a) Not be logged as received by the Engineer.
            b) Be removed from the submittal package and returned without review and comment to the Contractor for coordination, description and stamping.
            c) Be submitted by the Contractor as a new series number, not as a re-submittal number.
      b. Engineer, at Engineer's discretion, may revise the transmittal letter item list and descriptions, and conduct review.

1) Unless Contractor notifies Engineer in writing that the Engineer's revision of the transmittal letter item list and descriptions was in error, Contractor's review and approval stamp will be deemed to have applied to the entire contents of the submittal package.

4. Submittals returned with Action "A" or "B" are considered ready for fabrication and installation.
   a. If for any reason a submittal that has an "A" or "B" Action is resubmitted, it must be accompanied by a letter defining the changes that have been made and the reason for the resubmittal.
   b. Destroy or conspicuously mark "SUPERSEDED" all documents having previously received "A" or "B" Action that are superseded by a resubmittal.
5. Submittals with Action "A" or "B" combined with Action "C" (Revise and Resubmit) or "D" (Rejected) will be individually analyzed giving consideration as follows:
   a. The portion of the submittal given "C" or "D" will not be distributed (unless previously agreed to otherwise at the Preconstruction Conference).
      1) One copy or the one transparency of the "C" or "D" drawings will be marked up and returned to the Contractor. *{Engineer to verify with Contractor the desire for paper verses digital media}*
         a) Correct and resubmit items so marked.
   b. Items marked "A" or "B" will be fully distributed.
   c. If a portion of the items or system proposed is acceptable, however, the major part of the individual drawings or documents are incomplete or require revision, the entire submittal may be given "C" or "D" Action.
      1) This is at the sole discretion of the Engineer.
      2) In this case, some drawings may contain relatively few or no comments or the statement, "Resubmit to maintain a complete package."
      3) Distribution to the Owner and field will not be made (unless previously agreed to otherwise).
6. Failure to include any specific information specified under the submittal paragraphs of the Specifications will result in the submittal being returned to the Contractor with "C" or "D" Action.
7. Calculations required in individual specification sections will be received for information purposes only, as evidence calculations have been performed by individuals meeting specified qualifications and will be returned stamped "E. Engineer's Review Not Required" to acknowledge receipt.
8. Transmittals of submittals which the Engineer considers as "Not Required" submittal information, which is supplemental to but not essential to prior submitted information, or items of information in a transmittal which have been reviewed and received "A" or "B" Action in a prior submittal, will be returned with Action "E. Engineer's Review Not Required."

PART 2 - PRODUCTS (NOT USED)

PART 3 - EXECUTION (NOT USED)

END OF SECTION

SECTION 01520
MAINTENANCE OF PIPELINE AND PUMPING OPERATIONS

PART 1 - GENERAL

1.1 SUMMARY

A. The intent of this specification is to have the Contractor schedule and perform the force main tie-in work, sanitary manhole or gravity sewer rehabilitation, and pump station shutdowns, bypasses, and startups in a manner such that the Owner can maintain service in continuous dependable operation and meet all regulatory requirements. The Contractor shall adhere to the constraints listed in this Section. *{Engineer to modify this Specification section in collaboration with HRSD's Project Manager to the specific situations to be encountered for each project}*

1.2 GENERAL CONSTRAINTS

A. All shutdown operations shall be approved by the Owner. All shutdown operations shall be coordinated with and scheduled at times suitable to the Owner.
   1. HRSD Operations field support is limited to Tuesdays, Wednesdays, and Thursdays (excluding HRSD observed holidays) only.
   2. Flow diversions and pump station / pressure reducing station shutdowns will be between the hours of 10 PM and 4 AM unless otherwise noted or approved.

B. Bypass pumping systems or temporary emergency generators required for work on force mains, gravity mains, pump stations, or pressure reducing stations to be tested and alarmed as follows:
   1. Pumps and generators to be successfully tested for 24 hours continuously.
   2. Alarms to be installed to insure adequate response time for operational issues.
   3. Contractor to be the first responder to alarms throughout the bypass / shutdown event.
   4. Contractor responsible for fuel and required maintenance and documentation

C. HRSD does not guarantee complete system valve closures. The Contractor's Plan of Operation shall account for this situation in the developed plan.

D. Shop drawing submittals for all pipe and appurtenance materials required for the tie-in work shall be reviewed and approved by the Engineer prior to scheduling of the tie-in.

E. Shutdowns shall not begin until all required materials are on-hand and ready for installation and a written Plan of Operation has been submitted and approved by the Owner.

   At a time approved by the Owner, the shutdown period will commence, and the Contractor shall proceed with the Work continuously, start to finish, unless otherwise noted, until the Work is completed and the system is tested and ready for operation. If the Contractor completes all required Work before the specified shutdown period has ended, the Owner may immediately place the existing system back in service.
   1. If problems occur, Contractor along with appropriate staff and equipment to remain on site to be an extension of HRSD operational response until all operational issues have been resolved to the satisfaction of HRSD.
   2. Labor crews involved with a tie-in must be switched out after a maximum of 12-hour shifts.
   3. Consideration shall be given to extreme weather conditions as to whether or not reductions in crew shift time periods will be required at Owner's discretion

F. The Owner reserves the right to cancel scheduled shutdowns if conditions warrant.

G. Both Interim Record Drawings and Interim Valve Guides must be submitted and approved by HRSD in accordance with "Section 01323 – Record Documents" prior to a tie-in, shutdown, or system bypass.

1.3 GENERAL WORK SEQUENCE

A. Notification and Meetings:

1. The Contractor to submit a tentative schedule to the Engineer at least 30 calendar days prior to any work on or work affecting active HRSD force mains, pump stations, and gravity sewer mains for Owner to evaluate resources and prepare to support the Contractor's work efforts.
2. The Contractor shall provide written notice in the form of Contractor's Plan of Operation and tie-in checklist to the Owner and Engineer 10 business days prior to his anticipated tie-in date.
3. The Contractor shall develop and submit Interim Valve Guides and Interim Record Drawings to the Engineer for review a minimum of 5 business days in advance of the scheduled tie-in, shutdown, or startup. No tie-ins or shutdowns of an active HRSD system will be allowed until the referenced Interim Valve Guides and Interim Record Drawing are submitted and approved.
4. The Contractor shall schedule a Pre-tie-in and/or Pre-Startup Coordination Meeting 5 business days prior to the scheduled tie-in to review the previously submitted and approved Plan of Operation with the Owner, the Engineer, and {*representatives from affected locality and private utility owners*}. This meeting will not be held until the Plan of Operation has been approved by the Engineer and the Owner. The following will be discussed at this meeting:
   a. Review of tie-in checklist
   b. Review of site conditions to include rodding of air vents, operation of valves, access to all appurtenances, etc.
   c. Review of weather forecast/weather impacts to include freezing temperatures for pump & haul operations.
   d. Review contact information
5. The Contractor is required to schedule a meeting on site on the morning of a planned nighttime tie-in *{or one business day prior to a daytime allowable tie-in}* and shall notify the Owner, Engineer, and the {*representatives from affected locality and private utility owners*}. At the time of the meeting, the Contractor shall have all materials and equipment necessary for the tie-in on site, operable and assembled for inspection by the Owner and Engineer. The following will be discussed at this meeting:
   a. Review of site conditions
   b. Review weather forecasts / weather impacts
   c. Review work and contingency plans
   d. Review contact information
   e. Review of emergency equipment
6. The Owner reserves the right to postpone the scheduled tie-in if:
   a. The site or Contractor is not prepared as required in the plan notes and as agreed upon at the pre-tie-in meeting.
   b. The Owner or the *{insert name of locality where work is being performed}* has an emergency in another part of their system.
   c. A rain event has occurred in the 3 calendar days before the scheduled tie-in date or is forecasted in the 24 to 48 hours after the scheduled tie-in date in a portion of the sewer system with historical problems with inflow and/or infiltration.

B. Coordination:
1. The Contractor shall coordinate all activities with the Owner, Engineer, and the {*representatives from affected locality and private utility owners*} for acceptable dates for connection to force mains and any pipe removal and/or abandonment.
   a. Contractor's coordination shall include phone calls, meetings and discussions with the Owner, Engineer, and the {*representatives from affected locality and private utility owners*}.
   b. Contact with these entities shall be initiated simultaneously with the written notice of the scheduled tie-in to the Owner and Engineer.
   c. Text messaging shall not be an acceptable form of communication for coordination, or any other purposes related to the project.

2. The Contractor shall coordinate with the Engineer for preparation and submission of a Request for Valve Operation to Owner as follows:

    a. 5 business day notification to Owner for more than 2 required valve operations.
    b. 2 business day notification to Owner for 1-2 required valve operations.
    c. If the shutdown requires the operation of newly installed valves, a temporary valve guide must accompany the request.
3. {*Insert CCTV inspection requirements during shutdown/tie-in operation, as applicable*}.

C. Plan of Operation: At a minimum the Contractor's Plan of Operation shall include the following:
1. Schedule:
    a. Starting date.
    b. Sequential listing of specific tasks required to complete the tie-in.
    c. Anticipated duration for each task of the tie-in operation.
2. Method of dewatering the existing force main including where the sewage is to be disposed, and provide quantity of wastewater anticipated in dewatering.
3. Method of handling constant flow if valves or line stops do not close completely. HRSD cannot guarantee that full stoppage of flow will be achieved.
4. List of pump stations that must be maintained including HRSD, Locality and private stations.
5. Number of pumper trucks, to include capacity of each truck, to be supplied to handle flow at the existing stations and the pipe dewatering operations.
6. Contingency plan for handling flow at the existing pump station if the shutdown hours exceed the anticipated time frame.
7. Contingency plan for meeting a deadline for full traffic to be restored if a Locality roadway is taken out of service or the capacity reduced during the tie-in and the completion schedule cannot be met.
8. Mobile phone contacts (local phone number) for Contractor personnel, HRSD key personnel, Locality operations personnel, and other identified key stakeholders.
9. List of equipment and number of crews to verify adequacy of Contractor's ability to work both ends of the tie-in simultaneously and continuously until connections are complete.
10. Stone and other backfill materials to be on-site if rain is forecast and to be used if a heavy rain event occurs during the tie-in backfill and compaction stage.
11. Confirmation of availability and scheduling of asphalt placement and proper cure time for tie-ins under existing pavement to restore traffic movement.

D. Connection Work:
1. Shutdowns shall occur between the hours of 10 PM to 4 AM Tuesday through Thursday or as directed by the Owner or the {*insert name of locality where work is being performed*} at the time of shutdown.
2. The operation of all existing HRSD-owned mainline valves, air vents, and pump stations will be performed ONLY by HRSD forces.
3. The operation of all existing locality-owned mainline valves, air vents, and pump stations will be performed only by locality forces.
4. The operation of all existing privately-owned mainline valves, air vents, and pump stations will be performed only by forces of the private utility.
5. A decision point will be established by HRSD and the Engineer for the Contractor to cut the active force main. This decision during the tie-in will be based upon the Contractor's progress leading up to the cutting into the active force main. Inadequate progress by the Contractor leading up to this critical decision point may lead to a postponement of the tie-in completion, backfilling the excavation, placing temporary pavement, and rescheduling the remainder of the tie-in work.

6. Unless otherwise noted herein, the Contractor shall work continuously once the force main has been cut until the connection work is complete, operating pressure restored, visual test for leaks is complete, and the trench is backfilled to the satisfaction of the Owner's Representative.
7. The Contractor shall provide a crew with equipment for each connection point so that multiple connections can be completed simultaneously.
8. The Contractor is responsible for conveying sewage from all affected pump stations to prevent overflow throughout the entire duration of each shutdown. The fact that a facility served by one of these stations is closed at night is not a guarantee of zero sewage flow.
9. The amount of sewage within the force main anticipated to be handled by the Contractor during the shutdown, at the tie-in areas, is estimated for each service transfer. This data is given for information only, is derived from record drawings (not verified in the field) and no guarantees are given to the Contractor regarding volume of remaining sewage.
10. Once the dewatering of the force main has begun, all dewatering efforts in the tie-in trenches must be directed to an approved collection facility (e.g. vacuum truck or existing sanitary sewer collection system). This shall continue for the entire remaining duration of the tie-in. The Contractor is to be aware that discharging sewage from the tie-in excavation into an unapproved collection facility (e.g. creek, storm drainage, or drainage ditch) is unlawful and will not be permitted. Contractor to provide to Owner's Representative tickets or other documentation for each truck / tanker cycle of fill / dump used for pump & haul operations during tie-in or shutdown.
11. *{Engineer to coordinate with HRSD's Project Manager to specify allowable time duration for HRSD to perform CCTV related to condition assessment of existing pipe to be connected to following the Contractor's dewatering of the pipeline}*.
12. The Contractor is responsible for providing adequate screening during any bypass pumping or pump & haul operations in order to minimize debris.
13. The Contractor is responsible for providing adequate support and restraint, against system pressure of the exposed piping prior to and during startup and final backfill.
14. The Contractor shall follow the procedures herein for any joints of the new force main and fittings that have not been previously hydrostatically pressure tested:
    a. HRSD reestablishes services in the line.
    b. One half hour will elapse, after air venting is complete by HRSD.
    c. Joints will be visually inspected for signs of leakage by Owner or Owner's Representative.
    b. Any leakage noted shall be corrected to the satisfaction of the Owner or the Owner's Representative.
    c. After satisfactory visual testing of exposed joints by the Owner's Representative and any corrective action, the Contractor shall wrap the pipe and/or fitting as required and immediately proceed to backfill the pipe and restore to grade conditions or for reestablishment of traffic if in a roadway. Soil backfill compaction tests may be specified by the Owner or Owner's Representative for work within roadway travel lanes.
    d. If specified, utility warning tape shall be installed above the connection in accordance with the Bid Documents..
    e. Any joints not inspected by the Owner or the Owner's Representative, will not be approved and shall be excavated for inspection.
15. The Contractor shall assist the Owner during the reestablishment of flows as follows:
    a. Provide riser pipe, fittings, sewage containment drums for each control air vent locations, and temporary valve at the air release point to vent air.
    b. Provide means of electronic communication to coordinate this operation.

1.4 LINE {*INSERT HRSD LINE NUMBER*} SHUTDOWN:

A. General: This section describes, in general, the Work required to connect the relocated {*insert HRSD line number*} Force Main. The interconnections shall be completed in two phases, using both pump and haul and a line stop/bypass operation. This shutdown procedure describes, in general, the overall connection sequences. Refer to Contract Drawings for additional details.

1. {*Add additional details as necessary*}.

B. Maximum Duration:

1. {*Insert duration of shutdown in hours*}. Shutdown will only be allowed between the hours of {*insert time period indicating PM and AM*} {*insert days of shutdown, e.g. "Tuesday through Thursday"*}.

C. Affected Pump Stations: The Pump Stations directly impacted by the shutdown of Line {*insert HRSD line number*} are:

1. {*Insert all applicable pump stations affected*}.

D. Prior Work:

1. {*Describe as needed*}.

E. Bypass Pumping:

1. This shutdown will require temporary bypass pumping {*use if needed*}.
   a. The average daily flow into the HRSD {*insert pump station name*} Pump Station is estimated to be {*insert flow*} gpm and the maximum daily flow is estimated to be {*insert flow*} gpm.
   b. Supply all necessary pumps, conduits, operating controls, and other equipment to divert the flow around the section of force main pipe that is shut down and isolated.
   c. The Contractor is responsible for furnishing the necessary labor and supervision to set up and operate the pumping and bypassing system.
   d. Pumps and equipment shall be continuously monitored and maintained by the Contractor during periods that pumping and bypassing are required.
   e. Provide redundancy within the bypass pumping system. Back-up pumps shall be on-line and capable of isolating from the primary system by a valve.
   f. Select pumping/bypassing equipment that will not have excessive noise levels from pumping/bypassing equipment and shall be restricted to a maximum of seventy decibels (70 db) at a distance of 50 feet or as required to be in compliance with locality specific noise ordinances. Additional sound attenuation may be required in residential areas or as specified by HRSD.
   g. Contractor is solely responsible for sewage spills.
   h. The Contractor shall provide alarms during bypass operations.
      1) Bypass operations need alarms to contact Contractor as the primary responder and responsible operator.
      2) The bypass operation shall tie-into the existing HRSD SCADA/Telemetry system for secondary backup by HRSD Operations.
      3) HRSD requirements for bypass pumping operations is detailed in Part 3 Execution.
      4) This work is to be scheduled through HRSD at least 10 business days in advance of planned work.
2. Submit a bypass pumping plan that includes the following details:
   a. Bypass pump sizes, capacity, number of each size to be on site, and power requirements.
   b. Calculations of static lift, friction losses, and flow velocity.
   c. Pump curves showing pump operating range.
   d. Size, length, material, location, and method of installation for suction and discharge piping. At a minimum, each pump shall have a separate leg consisting of a suction isolation valve, a discharge check valve, (separate from pump), and a discharge isolation valve. The layout of which shall be capable of completely isolating the pump and check valve. All piping shall be rated for vacuum conditions.
   e. Method of noise abatement for each pump and/or generator.
   f. Standby power generator size and location.
3. The Contractor shall test operate bypass pumping system for 24 hours to confirm reliable operation of pumps, temporary systems, and alarms prior to bypass use. The start of the 24 hour bypass pumping test shall not start after Noon on Thursday or before Monday at 8:00 AM.

4. The operating bypass shall not terminate and be switched over to the newly installed infrastructure between Thursday Noon and Monday 8:00 AM unless otherwise stated or approved.

F. Work to be completed during Shutdown:

1. {*Describe work to be completed*}.

1.5 LINE {*INSERT HRSD LINE NUMBER***} SHUTDOWN: {***REPEAT AS NEEDED***}**

A. {*Describe work to be completed in a similar fashion as in 1.4 above*}

PART 2 - PRODUCTS (NOT USED)

PART 3 - EXECUTION

3.1 TEMPORARY PORTABLE PUMP ALARMS AND SETUP REQUIREMENTS

When a project requires a temporary portable pump to be alarmed, the following requirements need to be followed.

A. **When work is performed at station:** If power is available, all alarms are to be routed through existing HRSD's SCADA system. Portable pump manufacture call box is not acceptable unless otherwise approved for site specific situations. If power is not available then, HRSD solar SCADA panel will be provided. A portable generator may be required depending on site specific situations.

B. **When work is performed at a manhole:** If power is available, all alarms are to be routed through existing HRSD's SCADA system. Portable pump manufacture call box is not acceptable unless otherwise approved for site specific situations. If power is not available then, HRSD solar SCADA panel will be provided. A portable generator may be required depending on site specific situations. Naming of the alarms from a manhole should indicate the location of the manhole (i.e. Pearl and Ligon)

C. The name of the site is to be used followed by temporary lead, lag or second lag, depending on the number of pumps. (Example: Arctic Temporary Lead, Arctic Temporary Lag and Arctic Second Lag.)

D. Both Contractor and HRSD will be alerted in the event of a pump alarm. The Contractor is responsible to be primary responder with the support of HRSD staff.

E. All pump maintenance and fuel requirement are the contractor's responsibility.

F. Pump maintenance records are to be provided monthly through the duration of the project by Contractor, depending on length of project.

G. Battery chargers are required with all pumps. In situations where power is not available a portable generator may be required.

H. All discharge piping is to be pressure rated flanged or fused pipe. Isolations valves are required at each pump along with an additional external swing check valve. A means to bleed air off the discharge piping is required.

I. Float balls, level transducers and pressure transducers are acceptable. In a Lift station or manhole application, level transducers are preferred. If float balls are used for control, a two-float setup is required per pump. All floats are to be secured in manhole or wet well so as not to become tangled, hindering pump operation. In a temporary PRS setup, owner furnished sensor valve will be provided to allow Contractor to connect pressure transducers for

control. An isolation valve is required to be furnished by Contractor at this location.

J. If work is to be performed during cold weather, the Contractor is responsible for providing freeze protection on pumps and controls, specifically transducers.

K. Depending on location and duration of job, concrete protective barrier wall may be required.

L. All manholes and wet wells where temporary pumps are being used must be secured to prevent trip hazards, fall risks and odor issues.

The following standard alarms are required. Site specific alarms will be evaluated on a as need basis.

TWO PUMP LIFT STATION OR MANHOLE (DIESEL PUMPS)

Lead	Fail / Normal
Lag	On / off
High well	Alarm / Normal (HRSD furnished float ball if station alarms cannot be used)
Overflow	Alarm / Normal (Determined necessary according to length of Job. HRSD furnished float ball if station alarms cannot be used.)

THREE PUMP LIFT STATION OR MANHOLE (DIESEL PUMPS)

Lead	Fail / Normal
Lag	On / off
Second Lag	On / Off
High well	Alarm / Normal (HRSD furnished float ball if station alarms cannot be used)
Overflow	Alarm / Normal (Determined necessary according to length of Job. HRSD furnished float ball if station alarms cannot be used.)

TWO PUMP LIFT STATION OR MANHOLE (DIESEL PUMPS) NEW PRIME GUARD CONTROLLER

Lead	Fail / Normal
Lag	On / off and Fail / Normal
High well	Alarm / Normal (HRSD furnished float ball if station alarms cannot be used)
Overflow	Alarm / Normal (Determined necessary according to length of Job. HRSD furnished float ball if station alarms cannot be used.)

TWO PUMP LIFT STATION OR MANHOLE (ONE ELECTRIC ONE DIESEL PUMP) NEW PRIME GUARD CONTROLLER

Dominion Power	On / OFF
Lead	Fail / Normal (Electric)
Lag	On / off and Fail / Normal
High well	Alarm / Normal (HRSD furnished float ball if station alarms cannot be used)
Overflow	Alarm / Normal (Determined necessary according to length of Job. HRSD furnished float ball if station alarms cannot be used.)

(For HRSD monitoring purposes only, provide well level.)

THREE PUMP LIFT STATION OR MANHOLE (ONE ELECTRIC TWO DIESEL PUMP) NEW PRIME GUARD CONTROLLER

Dominion Power	On / OFF
Lead	Fail / Normal (Electric)
Lag	On / off and Fail / Normal
Second Lag	On / off and Fail / Normal
High well	Alarm / Normal (HRSD furnished float ball if station alarms cannot be used)
Overflow	Alarm / Normal (Determined necessary according to length of Job. HRSD furnished float ball if station alarms cannot be used.)

(For HRSD monitoring purposes only, provide well level.)

TWO PUMP PRS (DIESEL PUMPS) NEW PRIME GUARD CONTROLLER

Lead	Fail / Normal
Lag	On / off and Fail / Normal

(For HRSD monitoring purposes only, provide Suction and Discharge pressures.)

THREE PUMP PRS (DIESEL PUMPS) NEW PRIME GUARD CONTROLLER

Lead	Fail / Normal
Lag	On / off and Fail / Normal

Second Lag	On / off and Fail / Normal

(For HRSD monitoring purposes only, provide Suction and Discharge pressures.)

TWO PUMP PRS (ONE ELECTRIC ONE DIESEL PUMP) NEW PRIME GUARD CONTROLLER

Dominion Power	On / OFF
Lead	Fail / Normal (Electric)
Lag	On / off and Fail / Normal

(For HRSD monitoring purposes only, provide Suction and Discharge pressures.)

THREE PUMP PRS (ONE ELECTRIC TWO DIESEL PUMP) NEW PRIME GUARD CONTROLLER

Dominion Power	On / OFF
Lead	Fail / Normal (Electric)
Lag	On / off and Fail / Normal
Second Lag	On / off and Fail / Normal

(For HRSD monitoring purposes only, provide Suction and Discharge pressures.)

END OF SECTION

SECTION 01560
ENVIRONMENTAL PROTECTION AND SPECIAL CONTROLS

PART 1 - GENERAL

1.1 SUMMARY

A. Section addresses minimizing the pollution of air, water, or land; control of noise, and the disposal of solid waste materials.

1.2 QUALITY ASSURANCE

A. Referenced Standards:
   1. Virginia Department of Environmental Quality (VDEQ):
      a. Virginia Erosion and Sediment Control Handbook, Third Edition, 1992.

1.3 SUBMITTALS

A. Shop Drawings: Submit a detailed proposal of all methods of control and preventive measures to be utilized for environmental protection.

PART 2 - PRODUCTS

2.1 MATERIALS

A. Specifications for materials associated with the erosion and sediment control measures detailed in the drawings can be found in the Virginia Erosion and Sediment Control Handbook. A downloadable PDF copy of the Handbook can be obtained at the web site for the VDEQ at

https://www.deq.virginia.gov/home/showpublisheddocument/2462

PART 3 - EXECUTION

3.1 INSTALLATION

A. Employ and utilize environmental protection methods, obtain all necessary permits, and fully observe all local, state, and federal regulations.

B. The implementation of environmental protection methods for the Project shall be coordinated with Owner and its contractors completing work on the site. Refer to Paragraph 1.3 of Section 01040 - Coordination for additional information and points of contact for other projects being constructed at the site.

C. Land Protection:
   1. Except for any work or storage area and access routes specifically assigned for the use of the Contractor, the land areas outside the limits of construction activity shall be preserved in their present condition. Contractor shall confine his construction activities to areas defined for work within the Contract Documents.
   2. Manage and control all borrow areas, work or storage areas, stockpile areas, access routes and embankments to prevent sediment from entering nearby water or land adjacent to the work site.
   3. Restore all disturbed areas and establish permanent type of locally adaptable vegetative cover.
   4. Plan and execute earthwork in a manner to minimize duration of exposure of unprotected soils.
   5. The Contractor shall not deface, injure or destroy trees and vegetation, nor remove, cut, or disturb them without approval of the Engineer. Any damage caused by the Contractor's equipment or operations shall be restored to its original condition at the Contractor's expense.

D. Surface Water Protection:
   1. Utilize erosion control methods to minimize the discharge of sediment to the surface water leaving the construction site. These controls shall be maintained until the site is ready for final pavement and landscaping or until they are no longer warranted and concurrence is received from the Engineer. The Contractor is responsible for obtaining all required permits from the Locality and the VDEQ and having them readily available for inspection upon request.
      a. Install inlet protection prior to commencing excavation.
      b. Maintain erosion and sediment control measures.
         1) Inspect regularly especially after rainstorms.
         2) Promptly repair or replace damaged or missing items.
         3) Remove sediment from inlet protection to prevent overtopping.
      c. Provide storage and staging areas with graveled or rocked access entrance and exit drives and parking areas to reduce the tracking of sediment onto public or private roads.
   2. Physically retard the rate and volume of run-on and runoff by:
      a. Implementing structural practices such as diversion swales, terraces, straw bales, silt fences, berms, storm drain inlet protection, rocked outlet protection, sediment traps and temporary basins.
      b. Implementing vegetative practices such as temporary seeding, permanent seeding, mulching, sod stabilization, vegetative buffers, hydroseeding, anchored erosion control blankets, sodding, vegetated swales or a combination of these methods.
      c. Providing construction sites with graveled or rocked access entrance and exit drives and parking areas to reduce the tracking of sediment onto public and private roads.

E. Solid Waste Disposal:
   1. Collect and remove solid waste from the site on a weekly basis at a minimum.
   2. No building materials wastes or unused building materials shall be buried, dumped, or disposed of on the site.

F. Fuel and Chemical Handling:
   1. Store and dispose of chemical wastes in a manner approved by regulatory agencies.
   2. Take special measures to prevent chemicals, fuels, oils, and greases from entering drainage ways.
   3. Do not allow water used in onsite material processing, concrete curing, cleanup, and other waste waters to enter a drainage way(s) or stream.
   4. The Contractor shall provide containment around fueling and chemical storage areas to ensure that spills in these areas do not reach waters of the state.

G. Control of Dust:
   1. The control of dust shall mean that no construction activity shall take place without applying all such reasonable measures as may be required to prevent particulate matter from becoming airborne so that it remains visible beyond the limits of construction. Reasonable measures may include paving, frequent road cleaning, or application of water. The use of chemical agents will not be allowed.
   2. Utilize methods and practices of construction to eliminate dust in full observance of locality regulations and permit requirements.
   3. The Engineer will determine the effectiveness of the dust control program and may require the Contractor to provide additional measures, at no additional cost to Owner.

H. Burning: Burning of material on the site is prohibited.

I. Control of Noise: Control noise by fitting equipment with appropriate mufflers and sound enclosures to meet noise ordinances of locality where work is being performed.

J. Completion of Work:
   1. Upon completion of work, leave area in a clean, natural looking condition.
   2. Ensure all signs of temporary construction and activities incidental to construction of required permanent work are removed. Grade, fill and seed all disturbed areas.

END OF SECTION

SECTION 01650
FACILITY AND SYSTEM START-UP

PART 1 - GENERAL

1.1 SUMMARY

A. Section Includes: *{Engineer to determine if this section is needed and how it complements or replaces HRSD's Master Specification 01520 – Maintenance of Pipeline and Pumping Operations}*
   1. Procedures and actions, required of the Contractor, which are necessary to achieve and demonstrate Substantial Completion.
   2. Requirements for Substantial Completion Submittals.

B. Related Sections include but are not necessarily limited to:
   1. Division 0 - Bidding Requirements, Contract Forms, and Conditions of the Contract.
   2. Division 1 - General Requirements.
   3. Section XXXXX - Equipment: Basic Requirements. *{Engineer to provide this specification section and any other applicable sections as needed for specific project}*

1.2 DEFINITIONS

A. Project Classified System (PCS): A defined part of the Project, consisting of an arrangement of items, such as equipment, structures, components, piping, wiring, materials, or incidentals, so related or connected to form an identifiable, unified, functional, operational, safe and independent system.

B. Pre-Demonstration Period: The period of time, of unspecified duration after initial construction and installation activities during which the Contractor, with assistance from manufacturer's representatives, performs in the following sequence:
   1. Completion of the filing of all required submittals.
   2. Completion of finish-type construction work to ensure the Work and each PCS has reached a state of Substantial Completion.
   3. Initial equipment start-up, testing and checkout.
   4. Personnel training.
   5. Filing of the Contractor's Notice of Substantial Completion and Request for Inspection.
   6. Obtaining Certificate of Occupancy and other related permits. *{Engineer to review relevance of this requirement for specific project}*

C. Demonstration Period: A period of time, of specified duration, following the Pre-Demonstration Period, during which the Owner, with the Contractor's assistance, initiates process flow through the facility or PCS and starts up and operates the PCS or facility, without exceeding specified downtime limitations, to prove: *{Engineer and HRSD to collaboratively establish demonstration durations for each equipment or process}*
   1. Functional integrity of the system.
   2. Proper integration of the mechanical, electrical and control components and functions of the system.

D. Substantial Completion: See Division 0, General Conditions.

1.3 SUBMITTALS

A. Submit in the chronological order listed below:
   1. Master Facility and System Start-up Schedule:
      a. Submit prior to or at the same time as the first shutdown submittal required in Section XXXX *{Engineer to edit this referenced Technical Specification section for the specific project}*. Submittal to be in the required format *{Engineer to specify the requirements in this Section or reference the Sections where these reside in the Bid Documents}*.

b. Schedule to include the following for each Phase of Work:
   1) Time line for shutdowns and tie-ins.
   2) Time line for Pre-Demonstration Period requirements.
   3) Time line for Demonstration Period requirements.

2. Master Operation and Maintenance Training Schedule:
   a. Submit at least 20 business days prior to first training session for the Owner's personnel.
   b. Schedule to include:
      1) Date and time for the Owner witnessing of each equipment and system initial start-up.
      2) Date and time for Operation and Maintenance training for each system, both field and classroom.
      3) Target date for initiation of Demonstration Period.
   c. Submit for review and approval by the Owner.
   d. Include holidays observed by the Owner.
   e. Attend a schedule planning and coordination meeting 15 business days prior to first scheduled training session.
      1) Provide a status report and schedule-to-complete for requirements prerequisite to manufacturer's training.
      2) Identify final dates for individual manufacturer's training sessions.
   f. Owner reserves the right to insist on a minimum 5 business days' notice of rescheduled training session not conducted on master schedule for any reason.
   g. Schedule to be resubmitted until approved and re-submitted when changes are required.

3. Substantial Completion Submittal:
   a. File the Contractor's Notice of Substantial Completion and Request for Inspection in accordance with Division 1 requirements.
   b. Approved Operation and Maintenance manuals must be received by the Owner minimum 10 business days prior to scheduled training.
   c. Written request for the Owner to witness each system pre-demonstration start-up. Request to be received by the Owner minimum of 5 business days before scheduled training of the Owner's personnel on that system.
   d. Equipment installation and pre-demonstration start-up certifications.
   e. Letter verifying completion of all pre-demonstration start-up activities including receipt of all specified items from manufacturers or suppliers as final item prior to initiation of Demonstration Period.

B. Submittals for Personnel Training Requirements: See Part 3 of this Section.

1.4 FACILITY AND SYSTEM PHASING AND SCHEDULING

A. Phased Construction: The major categories of the phased construction activities are described Section XXXX, Maintenance of Plant Operation *{Engineer to edit and provide this Section}* and on the Drawings. Not all required phased construction activities are described. The Contractor is responsible for developing a detailed Progress Schedule and Master Facility and System Start-up Schedule incorporating all the Work activities including Pre-Demonstration Period and Demonstration Period requirements.

1.5 COST OF START-UP

A. The Owner will provide reasonable and necessary quantities of the items listed below during start-up. Contractor shall pay for all other costs associated with System and Facility Start-up.
   1. Electric power required to operate plant process equipment and to provide building lighting and heat. The starting and operation of large motors (>50 Hp) must be coordinated with the Owner at least 48 hours in advance. The Owner can incur substantial demand charges from the power utility as a result of large motor operation and the Owner may elect to shed other loads or operate the engine generator during the start-up and testing of large motors.
   2. Engine generator diesel fuel.

3. [Add process-specific chemicals here as appropriate – for example, polymer, hypochlorite, caustic, etc.]
4. Non-potable water (NPW). This includes only the water; Contractor to provide all equipment, temporary piping, connections and appurtenances required.

PART 2 - PRODUCTS - (NOT APPLICABLE TO THIS SECTION)

PART 3 - EXECUTION

3.1 GENERAL

A. Facility Start-up is divided into two periods: Pre-Demonstration Period and Demonstration Period. See paragraph 1.2 Definitions.

3.2 PRE-DEMONSTRATION PERIOD

A. Complete the submittal and approval process of all required submittals:
   1. Shop Drawings.
   2. Operation and Maintenance Manuals.
   3. Training schedule, agenda and materials.

B. Completion of Construction Work: Complete the Work to bring the Project or PCS to a state of Substantial Completion as defined in the General Conditions.

C. Initial Equipment Start-up:
   1. Requirements for individual items of equipment are included in Divisions 1 through 17 of these Specifications. *{Engineer to verify these are correct Division references and edit as necessary}*
   2. Prepare the equipment so it will operate properly and safely and be ready to demonstrate functional integrity during the Demonstration Period.
   3. Perform Equipment Start-up to the extent possible without introducing product flow.
      a. Test tanks, pumping and similar equipment requiring a fluid, using NPW.
      b. Dispose of water used for Equipment Start-up in a manner dictated by the Owner.
   4. Procedures include but are not necessarily limited to the following:
      a. Test or check and correct deficiencies of:
         1) Power, control, and monitoring circuits for continuity prior to connection to power source.
         2) Voltage of all circuits.
         3) Phase sequence.
         4) Cleanliness of connecting piping systems.
         5) Alignment of connected machinery.
         6) Vacuum and pressure of all closed systems.
         7) Lubrication.
         8) Valve orientation and position status.
         9) Tankage for integrity and water tightness.
         10) Pumping equipment.
         11) Instrumentation and control signal generation, transmission, reception, and response.
         12) Tagging and identification systems.
         13) Proper connections, alignment, calibration and adjustment of all equipment.
      b. Calibrate all safety equipment.
      c. Manually rotate or move moving parts to assure freedom of movement.
      d. "Bump" start electric motors to verify proper rotation.
      e. Perform other tests, checks, and activities required to make the equipment ready for Demonstration Period.

f. Documentation: Prepare a log showing each equipment item and listing what is to be accomplished during Equipment Start-up. Provide a place for the Contractor to record date and person accomplishing required work. Submit completed document before requesting inspection for Substantial Completion certification.

5. Obtain certifications, without restrictions or qualifications, and deliver to the Engineer:
   a. Manufacturer's equipment installation check letters.
   b. Instrumentation Supplier's Instrumentation Installation Certificate.
6. Cleanup: After successful demonstration, discontinue process flow, drain system and clean as necessary to achieve safe and sanitary conditions.

D. Personnel Training:
   1. *{See Training Schedule at the end of this Section} {project-specific, to be prepared by Engineer and appended to this section}*.
   2. Conduct all personnel training after completion of Initial Equipment Start-up for the equipment for which training is being conducted.
      a. Personnel training on individual equipment or systems will not be considered completed unless:
         1) All pretraining deliverables are received and approved before commencement of training on the individual equipment or system.
         2) No system malfunctions occur during training.
         3) All provisions of field and classroom training specifications are met.
      b. Training not in compliance with the above will be performed again in its entirety by the manufacturer at no additional cost to the Owner.
   3. Field and classroom training requirements:
      a. Hold classroom training on-site.
      b. Training instructor:
         1) Factory trained and familiar with giving both classroom and "hands-on" instructions. Session beginning and ending times to be coordinated with the Owner and indicated on the master schedule. Normal time lengths for class periods can vary.
         2) Submit qualifications and resume of proposed training instructor for approval. Replace proposed training instructor if not acceptable to the Owner or Engineer.
      c. Organize training sessions as shown in the Training Schedule (Operations, Maintenance and Electrical / Instrumentation and Control). Provide general training to all sessions as part of the specific training required for each group. Training material and sessions shall be specifically developed and tailored to the group being trained.
      d. Plan for minimum class attendance of 12 people at each session and provide sufficient classroom materials, samples, and handouts for those in attendance.
      e. Instructors to have a typed agenda, outline and well prepared instructional material. The use of visual aids, e.g., films, pictures, and slides is recommended for use during the classroom training programs. Submit proposed training agendas and outlines to the Owner and Engineer for approval a minimum of 15 business days prior to the training. Revise until acceptable. Provide equipment required for presentation of films, slides, and other visual aids. Training materials shall be related to the specific equipment; general sales brochures are not acceptable.
      f. In the on-site training sessions, cover the information required in the Operation and Maintenance manuals and the following areas as applicable to the PCS.
         1) Operation of equipment.
         2) Lubrication of equipment.
         3) Maintenance and repair of equipment.
         4) Troubleshooting of equipment.
         5) Preventive maintenance procedures.
         6) Adjustments to equipment.
         7) Inventory of spare parts.
         8) Optimizing equipment performance.
         9) Capabilities.

10) Operational safety.
11) Emergency situation response.
12) Takedown procedures (disassembly and assembly).

g. Maintain a log of classroom training provided including: Instructors, topics, dates, time, and attendance.

h. Provide an electronic copy (pdf or PowerPoint format) of the training handouts.

E. Filing of the Contractor's Notice of Substantial Completion and Request for Inspection of Project or PCS:

1. File the notice when the following have been completed:
   a. Submittal of required documents.
   b. Construction work (brought to state of Substantial Completion).
   c. Equipment Start-up.
   d. Personnel Training.
2. Engineer will review required submittals for completeness.
3. Engineer will inform the Contractor in writing of the status of the Work reviewed.
   a. Work determined not meeting state of Substantial Completion:
      1) Contractor: Correct deficiencies noted or submit plan of action for correction.
      2) Engineer: Re-inspect work within after notice of correction of deficiencies.
      3) Reinspection costs incurred by the Engineer will be billed to the Owner who will deduct them from final payment due the Contractor.
   b. Work determined to be in state of tentative Substantial Completion: Engineer to prepare tentative "Engineer's Certificate of Substantial Completion."
   c. Engineer's Certificate of Substantial Completion:
      1) Certificate tentatively issued subject to successful Demonstration of functional integrity.
      2) Issued for Project as a whole or for one or more PCS.
      3) Issued subject to completion or correction of items cited in the certificate (punch list).
      4) Issued with responsibilities of the Owner and Contractor cited.
      5) Executed by the Engineer.
      6) Accepted by the Owner.
      7) Accepted by the Contractor.
   d. Upon successful completion of Demonstration Period, the Engineer will endorse certificate attesting to the successful demonstration, and citing the hour and date of beginning the successful Demonstration Period of functional integrity as the effective date of Substantial Completion.

3.3 DEMONSTRATION PERIOD

A. General:

1. Demonstrate the functional integrity of the mechanical, electrical and control interfaces of the respective equipment and components comprising the facility or PCS as evidence of Substantial Completion.
2. Duration of Demonstration Period: 120 consecutive hours. *{Engineer to provide specific durations for each type equipment or process to be demonstrated}*
3. If, during the Demonstration Period, the aggregate amount of time used for repair, alteration, or unscheduled adjustments to any equipment or systems that renders the affected equipment or system inoperative exceed 10 percent of the Demonstration Period, the demonstration of functional integrity will be deemed to have failed. In the event of failure, a new Demonstration Period will recommence after correction of the cause of failure. The new Demonstration Period shall have the same requirements and duration as the Demonstration Period previously conducted.
4. Conduct the demonstration of functional integrity under full operational conditions.
5. Owner will provide operational personnel to operate the equipment and system. Contractor will perform all equipment repair, maintenance and corrective actions until successful completion of the Demonstration Period.

6. Owner reserves the right to simulate operational variables, equipment failures, routine maintenance scenarios, etc., to verify the functional integrity of automatic and manual backup systems and alternate operating modes.
7. Time of beginning and ending any Demonstration Period shall be agreed upon by the Contractor, Owner and Engineer in advance of initiating Demonstration Period.
8. Throughout the Demonstration Period, provide knowledgeable personnel and manufacturer's representatives to answer the Owner's questions, provide final Personnel Training on select systems and to respond to any equipment or system problems or failures which may occur. Provide final Personnel Training as indicated in the Training Schedule.
9. Provide all labor, supervision, utilities, chemicals, maintenance, equipment, vehicles or any other item necessary to operate and demonstrate all systems being demonstrated.

END OF SECTION

SECTION 02510
DUCTILE IRON PIPE and FITTINGS

PART 1 - GENERAL

1.1 SUMMARY

A. Section Includes:
1. Ductile iron piping, fittings and appurtenances for the use of installation of sanitary force main systems.

B. Related Specification Sections include but are not necessarily limited to:
1. Division 00 - Bidding Requirements, Contract Forms, and Conditions of the Contract.
2. Division 01 - General Requirements.
3. {*Section XXXXX - Trenching, Backfilling and Compaction for Utilities. Define frequency and location of backfill compaction testing by an independent testing firm*}.

1.2 QUALITY ASSURANCE

A. Referenced Standards:
1. American Society of Mechanical Engineers (ASME):
   a. B1.1, Unified Inch Screw Threads (UN and UNR Thread Form).
   b. B16.1, Cast Iron Pipe Flanges and Flanged Fittings - Classes 25, 125 and 250.
2. ASTM International (ASTM):
   a. A48, Standard Specification for Gray Iron Castings.
   b. A53, Standard Specification for Pipe, Steel, Black and Hot-Dipped, Zinc-Coated, Welded and Seamless.
   c. B695, Standard Specification for Coatings of Zinc Mechanically Deposited on Iron and Steel.
3. American Water Works Association (AWWA):
   a. C203, Standard for Coal-Tar Protective Coatings and Linings for Steel Water Pipelines - Enamel and Tape - Hot Applied.
   b. C213, Standard for Fusion-Bonded Epoxy Coating for the Interior and Exterior of Steel Water Pipelines.
   c. C600, Standard for Installation of Ductile-Iron Water Mains and Their Appurtenances.
4. American Water Works Association/American National Standards Institute (AWWA/ANSI):
   a. C104/A21.4, Standard for Cement-Mortar Lining for Ductile-Iron Pipe and Fittings.
   b. C105/A21.5, Standard for Polyethylene Encasement for Ductile-Iron Pipe Systems.
   c. C110/A21.10, Standard for Ductile-Iron and Gray-Iron Fittings for Water.
   d. C111/A21.11, Standard for Rubber-Gasket Joints for Ductile-Iron Pressure Pipe and Fittings.
   e. C115/A21.15, Standard for Flanged Ductile-Iron Pipe with Ductile-Iron or Gray-Iron Threaded Flanges.
   f. C150/A21.50, Standard for Thickness Design of Ductile-Iron Pipe.
   g. C151/A21.51, Standard for Ductile-Iron Pipe, Centrifugally Cast, for Water.
   h. C153/A21.53, Standard for Ductile-Iron Compact Fittings for Water Service.

B. Manufacturer and Installer Qualifications:
1. Manufacturer shall have experience in manufacturing ductile iron pipe of similar size and type to that specified herein. For a manufacturer to be determined acceptable for providing ductile iron pipe, they must show evidence of manufacturing a minimum of 10,000 linear feet of ductile iron piping and ten years' experience in the design and manufacturing of ductile iron pipe of similar size, type and application (water/wastewater) as specified herein.
2. Pipe and fittings shall be by the same manufacturer and not have been used in any previous application.

1.3 SUBMITTALS

A. Shop Drawings:
   1. Refer to Specification "Section 01340 – Submittals" for requirements for the mechanics and administration of the submittal process.
   2. Product technical data for gaskets, pipe, fittings and appurtenances including:
      a. Acknowledgement that products submitted meet the requirements of standards referenced.
         1) Acknowledgement shall be in the form of a letter or company-standard form containing all required data and signed by an officer of the manufacturing, fabricating or supplying company and at a minimum include:
            a) Name and location of the Work.
            b) Name and address of the Contractor.
            c) Name of the manufacturing or fabricating company.
      b. Certificates: Provide affidavit of compliance per AWWA C110, C153 and C151 fittings.
      c. Test reports: Summarizing results of the final shop pressure and leakage test.
      d. Copies of manufacturer's written directions regarding material handling, delivery, storage and installation for each type of pipe.
   3. Fabrication and/or layout drawings with information including:
      a. Scale (minimum scale 1 IN equals 10 FT).
      b. Dimensions of pipe lengths and fittings.
      c. Invert or centerline elevations of pipe crossings.
      d. Acknowledgement of bury depth requirements.
      e. Details of fittings, tapping locations, thrust blocks, restrained joint segments, harnessed joint segments and related appurtenances.
      f. Acknowledge designated valve tag numbers, manhole numbers, instrument tag numbers, pipe and line numbers.
      g. Line slopes and vent locations.
   4. Details of temporary restraints required for testing.

B. Field quality control documents:
   1. Test reports summarizing results of the final field pressure and leakage test

1.4 DELIVERY, STORAGE AND HANDLING

A. Protect pipe, fittings, appurtenances, linings and coating during handling using methods recommended by the manufacturer and approved by the Engineer.
   1. Use of bare cables, chains, hooks, metal bars or narrow skids in the contact with coated and/or lined pipe is not permitted.
   2. Handle only from the outside of the pipe and fittings. Lifting by inserting forks into the pipe or fittings is not permitted.

B. Prevent damage to pipe during transit.
   1. Repair abrasions, scars and blemishes. If repair of satisfactory quality cannot be achieved, replace damaged material in its entirety immediately.

C. Store pipe in a manner to keep pipe interior free from dirt and foreign matter.
   1. Storing on stones or other hard material that can damage the pipe exterior is not permitted.
   2. Storing pipe on top of pipe is not permitted.
   3. Materials subject to corrosion shall be protected in accordance with the manufacturer's recommendations.

PART 2 - PRODUCTS

2.1 ACCEPTABLE MANUFACTURERS

A. Subject to compliance with the Contract Documents, the following manufacturers of restrained joint systems are acceptable:
   1. Restraint System for Ductile Iron Pipe and Fittings:
      a. EBAA Iron, Inc.
      b. Sigma Corporation.
      c. Ford Meter Box Company.
      d. Smith Blair Camlok
      e. American Ductile Iron Pipe, FLEX-RING.
      f. U.S Pipe TR-FLEX.
      g. U.S. Pipe HDSS System.
      h. Or approved equal
   2. Mechanical Joint Adaptor:
      a. {Infact Corporation, Foster Mechanical Joint Adaptor. Approval by HRSD on a case by case}
   3. Lining Material:
      a. Induron Coatings, Inc., Protecto 401.
      b. Permox CTF
      c. TNEMEC Series 431

B. Submit request for substitution in accordance with Specification Section {*Insert applicable section*}.

2.2 MATERIALS

A. Pipe:
   1. Push-on joints:
      a. AWWA/ANSI C151/A21.51.
      b. Special Thickness Class 51.
      c. Furnished where thrust restraint is not required.
      d. Furnish for buried application.
   2. Mechanical joint:
      a. AWWA/ANSI C151/A21.51.
      b. Special Thickness Class 51.
      c. Furnish where thrust restraint is required and approved restraint system is not used.
      d. Furnish at connection locations.
      e. Furnish for buried application.
      f. Threaded bells shall not be used.
   3. Flanged joint:
      a. AWWA/ANSI C115/A21.15.
      b. Special Thickness Class 53.
      c. Furnish for exposed pipe application only.
      d. No full stick of flanged pipe shall be installed in a buried application.

B. Fittings and Flanges:
   1. Fittings: AWWA/ANSI C110/A21.10 or C153/A21.53.
      a. Reducers shall be eccentric. Match grade at top of pipe.
   2. Flanges: Drilled and faced per ASME B16.1 for both 125 and 250 psi applications.

C. Saddles for Air Vents:
   1. Smith Blair Service Saddle with 2-inch threaded outlet (Mueller CC threads).
   2. Smith Blair Models
      a. Style 366 for pipe 18-inche in diameter and larger
      b. Style 313 for pipe less than 18-inch diameter
   3. JCM Industries
      a. Style 418 for pipe 24-inches and larger

b. Style 404 for pipe less than 24-inch diameter

D. Nuts and Bolts:
1. Mechanically galvanized ASTM B695, Class 40
2. Heads and dimensions per ASME B1.1.
3. Threaded per ASME B1.1.
4. Project ends 1/4 IN to 1/2 IN beyond nuts.
5. All buried nuts and bolts shall be wrapped with polyethylene encasement unless otherwise as shown on the plans or specified herein.

E. Gaskets:
1. Mechanical joint: AWWA C111.
2. Push-on joint: AWWA C111 and manufacturer's standard design dimensions and tolerances.
3. Flange: AWWA C111.
4. At no time shall gaskets be cut that will be used in the installation of pipeline

F. Linings and Coatings:
1. Provide one of the following interior linings:
   a. Ceramic novolac epoxy lining:
      1) Completely cover the interior surface of pipe and fittings.
      2) Shop apply in accordance with the manufacturer's recommendations.
      3) Produce a pinhole free lining covering and properly adhered to the interior surface.
      4) The lining shall be 40 mils DFT nominal thickness, 35 mils DFT minimum.
      5) Apply within 8 hours after surface preparation.
      6) Apply directly to the cleaned substrate to achieve the specified dry film thickness.
         a) Multiple pass application is permitted provided the maximum allowable recoat time is not exceeded.
      7) The lining shall have a 6 mils DFT nominally and 10 mils DFT maximum for the gasket area and spigot area end up to 6 IN back from the end of the spigot on the outside of the pipe.
         a) These areas shall be coated with the approved manufacturer's joint compound applied by brush to ensure proper coverage. Care must be taken so that the joint compound is smooth without excessive build-up in the gasket seat or on the spigot ends.
         b) Coating of the gasket seat and spigot ends shall be performed after application of the lining to all other pipe or fitting surfaces.
      8) The lining in all pipe barrels and fittings shall pass 2,500 volt wet sponge holiday or discontinuity detection.
      9) Conduct holiday detection testing over 100 percent of lined surfaces.
         a) Testing shall be in accordance with ASTM D5162 and most recent version of NACE RP-0188.
         b) Testing shall be conducted over 100% of all lined surfaces for ductile iron.
         c) All holidays shall be repaired in accordance with manufacturer's instruction and retested to ensure a pinhole free lining.
      10) Finished lining shall be generally smooth and free of runs, sags and sharp protuberances.
      11) Field cutting and tapping of lined pipe and fittings is not permitted without written approval from HRSD on a case by case basis. If field cuts are allowed, contractor shall repair cut with liner repair kit in accordance with manufacturer's recommendations.
         a) All air release valve installations shall be field tapped at the true, as-constructed high point. All taps shall be verified from the inside of the pipe and the liner shall be repaired as necessary.
         b) Short lengths of pipe required to accommodate pipe and fitting geometry shall be furnished factory lined.
2. Exterior coatings:

a. Pipe, fittings, and appurtenance, include mechanical joint and retainer glands and appurtenances.
b. Asphaltic in accordance with AWWA/ANSI C110/A21.10.

3. Polyethylene encasement:
   a. All ductile iron pipe and fittings shall be wrapped *{Engineer to decide if single/double wrapping and to coordinate with HRSD Project Manager if newly introduced biowrap is acceptable or preferable}* with polyethylene encasement conforming to the requirements of ANSI/AWWA C105/A21.5 unless otherwise shown on the plans or specified herein. *{Engineer to decide if required}*
   b. Polyethylene encasement shall have minimum thickness of 8 mil per layer.

G. Utility Marking Tape:
1. Subsurface utility marking tape shall be of a durable, metalized, plastic film, bright green in color, imprinted with the legend "CAUTION: SEWER BELOW".
   a. The utility marking tape shall be manufactured by Griffolyn Company or approved equal.

PART 3 - EXECUTION

3.1 INSPECTION

A. Items of material furnished under this Section shall be subject to inspection by the Owner's representation prior to installation.
1. Items found not to be in compliance with this Section shall be removed from the project site and replaced with items that have been approved for installation.
2. Inspections and approvals do not relieve the Contractor from complying with the Contract Documents.

3.2 PIPE INSTALLATION

A. Trenching:
1. Excavate trenches by open cut method to depth and width necessary to accommodate Work.
2. Support existing utility lines traversing trench and stabilize excavation to prevent undermining of existing utility lines.
3. Open only length of trench required to complete each day's piping installation.

B. Dewatering:
1. Install a dewatering system as required to prevent softening and disturbance of subgrade during construction. All dewatering system design is the Contractor's responsibility.
2. Groundwater shall be maintained at least 2 FT below the bottom of any excavation.
3. Keep dewatering system in operation until backfill to cover pipe is in place.
4. Dispose of uncontaminated groundwater to an area which will not impair construction operations or damage existing construction.
5. Refer to the requirements of "Section 02710 - Contaminated Groundwater Management" if suspected or confirmed presence of hydrocarbon and other defined contaminants in the removed groundwater. *{Engineer to determine applicability of this section}*
6. Contractor shall adhere to locality noise ordinance for operation of dewatering pumps and generators.

C. Preparation of Foundation for Pipe Laying:
1. Subgrade Stabilization:
   a. If subgrade of pipe trenches is in a frozen, loose, wet, or soft condition before construction is placed thereon, remove frozen, loose, wet, or soft material and replace with approved compacted material as authorized by Engineer in writing.
   b. Loose, wet, or soft materials, when approved by Engineer in writing, may be stabilized by a compacted working mat of well graded crushed stone.

1) Over-excavate up to a depth of 2 FT below the design final subgrade elevation to remove the unsuitable material.

c. Compact stone bedding material thoroughly into subgrade to avoid future migration of fines into the stone voids.

d. Unstable trench bottoms caused by the Contractor's failure to dewater or Contractor operations shall be replaced at no additional compensation.

D. Laying Pipe in Trench:

1. Clean each pipe length thoroughly and inspect for compliance to Specifications.
2. Grade trench bottom and excavate for pipe bell and lay pipe on trench bottom.
3. Install gasket or joint material according to manufacturer's directions after joints have been thoroughly cleaned and examined.
4. Lay pipe in only suitable weather with good trench conditions.
   a. Never lay pipe in water except where approved by Engineer.
5. Seal open end of line with watertight plug if pipe laying stopped.
6. Remove water in trench before removal of plug.

E. Joining Method - Push-On Joints:

1. Install in accordance with AWWA C600.
2. Assemble push-on joints in accordance with manufacturer's directions.
3. Lubricate spigot end of pipe to facilitate assembly without damage to gasket.
   a. Use lubricant that has no deteriorating effects on the gasket material
4. Assure the gasket groove is thoroughly clean.
5. For cold weather installation, warm gasket prior to placement in bell.
6. Taper of bevel shall be approximately 30 degrees with centerline of pipe and approximately 1/4 IN back.
7. Lining Up Push-On Joint Piping:
   a. Pipe deflections shall not exceed 50% of the maximum deflection values stated in manufacturer's written literature.
   b. Install shorter lengths of pipe in such length and number that angular deflection of any joint does not exceed 50% of the maximum deflection values stated in manufacturer's written literature.

F. Joining Method - Push-On Mechanical Joints (Restrained):

1. Install in accordance with AWWA C600.
2. Assemble mechanical joints in accordance with manufacturer's directions.
3. Bevel and lubricate spigot end of pipe to facilitate assembly without damage to gasket.
   a. Use lubricant that has no deteriorating effects on the gasket material
4. Assure the gasket groove is thoroughly clean.
5. For cold weather installation, warm gasket prior to placement in bell.
6. Taper of bevel shall be approximately 30 degrees with centerline of pipe and approximately 1/4 IN back.
7. Do not overstress bolts. The use of a torque wrench is required.
8. Install restraint system in accordance with manufacturer's directions and as required in the plans.

G. Installation of Saddles for Air Vents *{Engineer to review this requirement against HRSD Standard Detail}*

1. Approved stainless steel saddle shall be used to install air vent assembly at each high point along pipeline.
2. Field taps shall be made at each location for air vent assembly.

H. Polyethylene Encasement:

1. {Double/Single *Engineer to decide which is appropriate for type of wrap specified*}Wrap all ductile iron pipe, fittings, and nuts and bolts in polyethylene encasement in full compliance to ANSI/AWWA C105/A21.5 unless otherwise shown on the plans or specified herein.
   a. Encase underground appurtenances required as part of installation.

b. Where tapping polyethylene encased pipe, first wrap location of tap with three (3) layers of polyethylene adhesive tape and make tap through tape.
c. Make sections of tubing 2 FT longer than pipe section to be covered.
d. Slip tube over pipe while pipe is suspended immediately before placing in trench.
e. After installing in trench, pull tube ends over joint and overlap.
f. Fasten securely in-place on each side of each joint with joint tape or strapping.
g. Pull loose tube along pipe barrel up snugly around pipe and fasten in-place with joint tape at 3 FT intervals.
h. Completely cover fittings and connections with film held snugly in-place with joint tape or strapping.

2. Mid span restraints used for the construction of the thrust collars shall be wrapped in polyethylene encasement.

I. Backfilling Methods:
1. Comply with the following:
a. Observe specific pipe manufacturer's recommendations regarding backfilling and compaction.
b. Over excavation shall be filled with #57 stone at the contractor's expense.
c. Place backfill in lifts not exceeding 8 IN (loose thickness).
d. Hand place, shovel slice, and pneumatically tamp all backfill to a depth of 6-IN above top of pipe.
e. Compact each lift to specified requirements
f. Compaction testing as defined in the Bid Documents for locations and frequency will be performed by an independent testing firm
g. Avoid displacing joints and appurtenances or causing any horizontal or vertical misalignment, separation, or distortion.

2. Water flushing for consolidation is not permitted.

J. Utility Marking Tape:
1. Install utility marking tape in accordance with the following:
a. Tape shall be placed no less than 6 IN and no greater than 12 IN below the proposed finished grade.

3.3 CONNECTIONS WITH EXISTING PIPING

A. Scheduling: Refer to "Section 01520 – Maintenance of Pipe and Pumping Operations" for notification requirements.

B. Prior to the beginning of pipe laying, verify the location, configuration, type, and dimensions of the existing joint and pipe where the connections to the existing system are to be installed. This information shall be furnished to the Engineer for review.

C. Provide suitable equipment to dewater, drain, and dispose of liquid removed from existing pipe during connection.

3.4 FIELD QUALITY CONTROL

A. Backfill Compaction Testing
1. Compaction testing as required and defined in the Bid Documents for locations and frequency to be tested by an independent firm.

B. Testing of Pipe:
1. General Procedures for Hydrostatic Pressure Testing:
a. Testing shall be in accordance with AWWA C600.
b. Provide temporary restraints for exposed joints during test.
c. All piping and appurtenances (including air vents) shall be fully installed to the extent possible prior to performing testing.
d. Test buried piping after backfilling.

e. Ports for testing shall be at 2-IN taps for proposed air vents or in plugs installed for testing. Under no circumstances shall the contractor tap the proposed force main for testing purposes.

f. Test requirements:
   1) Test medium: Potable water only.
   2) Pressure: 100 psi.
   3) Duration: 2 hrs.

g. Perform pressure test using calibrated pressure gages and calibrated volumetric measuring equipment to determine leakage rates. *{Note to Engineer: coordinate with HRSD Project Manager as to a preference for Owner provided calibrated gauge verses Contractor provided calibrated gauge for specific hydrostatic test}*
   1) Contractor shall furnish and use a gauge that has been calibrated within 12 months of the planned use. Contractor shall provide to Engineer verification certification of stated calibration of the pressure test gauge.
   2) Select each gauge so that the specified test pressure falls within the upper half of the gauge's range.
   3) Notify the Owner's Representative a minimum of 2 business days prior to each test.
   4) Owner's Representative shall be present during the test.

h. Completely assemble and test new piping systems prior to connection to existing pipe systems.

i. The hydrostatic pressure test shall not be done against any valve.

j. The test allowance shall be calculated in accordance with AWWA C600. The testing allowance is defined as the quantity of water that must be supplied to the pipe section being tested to maintain a pressure within 5 psi of the specified hydrostatic test pressure. No installation will be accepted if the quantity of makeup water is greater than that determined by the formula:

$$\mathbf{Q} = \frac{\mathbf{LD}\sqrt{\boldsymbol{P}}}{\mathbf{148{,}000}}$$

   Where:
   Q = quantity of makeup water (gph)
   L = length of pipe section being tested (FT)
   D = nominal diameter of the pipe (IN)
   P = average test pressure during the hydrostatic test (psig)

k. The Contractor shall bear the cost of all testing and inspecting, locating and remedying of leaks and any necessary retesting and re-examination.

l. Prepare hydrostatic test report and submit to Engineer in accordance with "Section 01340 – Submittals".

END OF SECTION

SECTION 02520
POLYVINYL CHLORIDE PIPE

PART 1 - GENERAL

1.1 SUMMARY

A. Section Includes:
   1. Polyvinyl Chloride (PVC) pipe, fittings, and appurtenances.

B. Related Specification Sections include but are not necessarily limited to:
   1. Division 00 - Bidding Requirements, Contract Forms, and Conditions of the Contract.
   2. Division 01 - General Requirements.
   3. {*Section XXXXX - Trenching, Backfilling and Compaction for Utilities. Define frequency and location of backfill compaction testing by an independent testing firm*}.

1.2 QUALITY ASSURANCE

A. Referenced Standards:
   1. American National Standards Institute (ANSI):
      a. B40.100, Pressure Gauges and Gauge Attachments.
   2. ASTM International (ASTM):
      a. PVC (polyvinyl chloride) materials:
         1) D1784, Standard Specification for Rigid Poly(Vinyl Chloride) (PVC) Compounds and Chlorinated Poly(Vinyl Chloride) (CPVC) Compounds.
         2) D1785, Standard Specification for Poly(Vinyl Chloride) (PVC) Plastic Pipe, Schedules 40, 80, and 120.
         3) D2241, Standard Specification for Poly(Vinyl Chloride) (PVC) Pressure-Rated Pipe (SDR Series).
         4) D2467, Standard Specification for Poly(Vinyl Chloride) (PVC) Plastic Pipe Fittings, Schedule 80.
         5) D2564, Standard Specification for Solvent Cements for Poly(Vinyl Chloride) (PVC) Plastic Piping Systems.
         6) D3034, Standard Specification for Type PSM Poly(Vinyl Chloride) (PVC) Sewer Pipe and Fittings.
         7) D3139, Standard Specification for Joints for Drain and Sewer Plastic Pipes Using Flexible Elastomeric Seals.
         8) D3212, Standard Specification for Joints for Drain and Sewer Plastic Pipe using Flexible Elastomeric Seals.
         9) F477, Standard Specification for Elastomeric Seals (Gaskets) for Joining Plastic Pipe.
         10) F593, Standard Specification for Stainless Steel Bolts, Hex Cap Screws, and Studs.
         11) F679, Standard Specification for Poly(Vinyl Chloride) (PVC) Large-Diameter Plastic Gravity Sewer Pipe and Fittings.
         12) F794, Standard Specification for Poly(Vinyl Chloride) (PVC) Profile Gravity Sewer Pipe and Fittings Based on Controlled Inside Diameter.
         13) F949, Standard Specification for Poly(Vinyl Chloride) (PVC) Corrugated Sewer Pipe with a Smooth Interior and Fittings.
         14) F1869, Standard Test Method for Measuring Moisture Vapor Emission Rate of Concrete Subfloor Using Anhydrous Calcium Chloride.
      b. Installation:
         1) D2321, Standard Practice for Underground Installation of Thermoplastic Pipe for Sewers and Other Gravity-Flow Applications.
   3. American Water Works Association (AWWA):
      a. PVC (Polyvinyl Chloride) materials:

1) C605, Standard for Underground Installation of Polyvinyl Chloride (PVC) Pressure Pipe and Fittings for Water.
2) C900, Standard for Polyvinyl Chloride (PVC) Pressure Pipe and Fabricated Fittings, 4 IN through 12 IN, for Water Transmission and Distribution.
3) C905, Standard for Polyvinyl Chloride (PVC) Pressure Pipe and Fabricated Fittings, 14 IN through 48 IN, for Water Transmission and Distribution.

b. Polyethylene (PE) materials:
1) C901, Standard for Polyethylene (PE) Pressure Pipe and Tubing, 1/2 IN through 3 IN, for Water Service.

c. Ductile Iron materials:
1) C600, Standard for Installation of Ductile Iron Water Mains and Their Appurtenances.

4. American National Standards Institute/American Water Works Association (ANSI/AWWA):
a. C104/A21.4, Standard for Cement-Mortar Lining for Ductile Iron Pipe and Fittings.
b. C110/A21.10, Standard for Ductile-Iron and Gray-Iron Fittings for Water.
c. C153/A21.53, Standard for Ductile-Iron Compact Fittings for Water Service.
5. National Sanitation Foundation International (NSF).

B. Manufacturer's and Installer's Qualifications:
1. Manufacturer shall have experience in manufacturing polyvinyl chloride (PVC) pipe of similar size and type to that specified herein. For a manufacturer to be determined as acceptable for providing PVC pipe, they must show evidence of manufacturing a minimum of 10,000 linear feet of PVC piping and ten years' experience in the design and manufacturing of PVC pipe of similar size, type, and application (water/wastewater) as specified herein.
2. Pipe and fittings shall not have been used in any previous application.

1.3 SUBMITTALS

A. Shop Drawings:
1. Refer to Specification "Section 01340 – Submittals" for requirements for the mechanics and administration of the submittal process.
2. Product technical data for gaskets, pipe, fittings, and appurtenances including:
a. Acknowledgement that products submitted meet the requirements of standards referenced.
1) Acknowledgement shall be in the form of a letter or company-standard form containing all required data and signed by an officer of the manufacturing, fabricating, or supplying company and at a minimum include:
a) Name and location of the Work.
b) Name and address of the Contractor.
c) Name of the manufacturing or fabricating company.
d) Design calculations.

b. Certificates: Provide affidavit of compliance per AWWA C110 or AWWA C153 for fittings.
c. Test reports: Summarizing results of the final field pressure leakage test.
d. Copies of manufacturer's written directions regarding material handling, delivery, storage, and installation for each type of pipe.
3. Details of temporary restraints for testing.

B. Field quality control documents:
1. Test reports.

1.4 DELIVERY, STORAGE, AND HANDLING

A. The Contractor shall use all means necessary to protect pipe materials, fittings, and appurtenances before, during, and after installation.

B. Contractor shall use straps and not chains, cables, or unpadded forks to handle pipe.

1. Handle only from the outside of the pipe and fittings.

C. Prevent damage to the pipe, fittings, and appurtenances during handling and transit by using methods recommended by the manufacturer and approved by the Engineer.
   1. Repair abrasions, scars, and blemishes.
      a. If repair of satisfactory quality cannot be achieved, replace damaged material in its entirety immediately.
   2. All damaged pipe, fittings, and appurtenances shall be removed from the site by the Contractor and when directed to do so by the Owner.

D. Pipe shall be stored to assure the preservation of quality and fitness for the Work.
   1. Store pipe in a manner to keep pipe interior free from dirt and foreign matter.
   2. Storage on stones or other hard material that can damage the pipe exterior is not permitted.
   3. Storage of pipe on top of pipe is not permitted.
   4. Protect pipe stored outside from sunlight.

PART 2 - PRODUCTS

2.1 ACCEPTABLE MANUFACTURERS

A. Subject to compliance with the Contract Documents, the following manufacturers are acceptable:
   1. Restraint System for PVC Bell and Spigot Joints:
      a. EBAA Iron, Inc., Series 1600/2800.
      b. Ford Meter Box Company, Inc., Series 1390.
      c. Sigma Corporation, PV-LOK Series.
      d. Smith-Blair Camlok
      e. Or approved equal.
   2. Restraint System for PVC to Mechanical Joint Fittings:
      a. EBAA Iron, Inc., Series 2000 PV.
      b. Ford Meter Box Company, Inc., Series 1500.
      c. Sigma Corporation ONE-LOK Series.
      d. Or approved equal.

B. Submit request for substitution in accordance with Specification Section *{Insert applicable section}*.

2.2 MATERIALS

A. PVC Force Main Piping:
   1. Furnish materials in full compliance with the following requirements:
      a. PVC Pipe:
         1) 4 IN through 12 IN, AWWA C900.
         2) 14 IN through 48 IN, AWWA C905 – DR25.
         3) Laying lengths shall be 13 FT or 20 FT.
         4) Restrained joint where shown on the Contract Drawings.
         5) Unplasticized polyvinyl chloride plastic pressure pipe with integral wall bell and spigot joints and shall bear the seal of approval by the National Sanitation Foundation (NSF).
      b. Joints:
         1) Push-on joints:
            a) O-ring gaskets, ASTM F477.
            b) Flexible factory assembled elastomeric ring in the integral bell-end, ASTM D3139.
         2) Joint material including gaskets and lubricants:
            a) AWWA C900 and ASTM D3139.
            b) At no time shall gaskets be cut that will be used in the installation of pipeline

c. Fittings:
   1) ANSI/AWWA C110/A21.10 ductile iron or C15/A21.53
      a) Refer to Specification "Section 02510 – Ductile Iron Pipe and Fittings".
d. Polyethylene encasement:
   1) All ductile iron fittings shall be wrapped *{Engineer to decide if single/double wrapping and to coordinate with HRSD Project Manager if newly introduced biowrap is acceptable or preferable}* with polyethylene encasement conforming to the requirements of ANSI/AWWA C105/A21.5 unless otherwise shown on the plans or specified herein. *{Engineer to decide if required}*
   2) Polyethylene encasement shall have minimum thickness of 8 mil per layer.
e. Tracer Wire:
   1) Copper tracer wire shall be 10-gauge, solid wire with plastic coating.
f. Utility Marking Tape:
   1) Subsurface utility marking tape shall be of a durable, metalized, plastic film, bright green in color, imprinted with the legend "CAUTION: SEWER BELOW".
      a) The utility marking tape shall be manufactured by Griffolyn Company or approved equal.
      b) Tape shall be placed no less than 6 IN and no greater than 12 IN below the proposed finished grade.

B. PVC Gravity Sewer Piping:
   1. Furnish materials in full compliance with the following requirements:
      a. PVC Pipe, Joints, and Fittings:
         1) Pipe sizes 6 IN through 15 IN DIA, ASTM D3034 SDR 26.
         2) Pipe sizes 18 IN through 27 IN DIA, ASTM F679.
         3) Manufactured from approved PVC compound, ASTM D1784.
         4) Laying lengths shall be 13 FT or 20 FT.
         5) Integral bell with gasketed joints, except where specified otherwise on the Drawings.
         6) Joints:
            a) ASTM D3034, Section 6.
            b) Performance requirements of ASTM D3212.
         7) Rubber gaskets shall meet physical requirements in ASTM F477 and ASTM D1869.
         8) At no time shall gaskets be cut that will be used in the installation of pipeline

C. Utility Marking Tape:
   1. Subsurface utility marking tape shall be of a durable, metalized, plastic film, bright green in color, imprinted with the legend "CAUTION: SEWER BELOW".
      a. The utility marking tape shall be manufactured by Griffolyn Company or approved equal.

D. Saddles for Air Vents:
   1. Service saddles shall have 2-inch threaded outlets (Mueller CC threads).
   2. Smith Blair Models
      a. Style 366 for pipe 18-inch diameter and larger.
      b. Style 313 for pipe less than 18-inch diameter
   3. JCM Industries
      a. Style 418 for pipe 24-inch and larger
      b. Style 404 for pipe less than 24-inch diameter

PART 3 - EXECUTION

3.1 INSPECTION

A. Items of material furnished under this Section shall be subject to inspection prior to installation.
   1. Items found not to be in compliance with this Section shall be removed from the project site and replaced with items that have been approved for installation.

2. Inspections and approvals do not supplement the need to comply with the Contract Documents.

3.2 PIPE INSTALLATION

A. Trenching:
   1. Excavate trenches by open cut method to depth and width necessary to accommodate Work.
   2. Support existing utility lines traversing trench and stabilize excavation to prevent undermining of existing utility lines.
   3. Open only length of trench required to complete each day's piping installation.

B. Dewatering:
   1. Install a dewatering system as required to prevent softening and disturbance of subgrade during construction. All dewatering system design is the Contractor's responsibility.
   2. Groundwater shall be maintained at least 2 FT below the bottom of any excavation.
   3. Keep dewatering system in operation until backfill to cover pipe is in place.
   4. Dispose of uncontaminated groundwater to an area which will not impair construction operations or damage existing construction.
   5. Refer to the requirements of "Section 02710 – Contaminated Groundwater Management" if suspected or confirmed presence of hydrocarbon and other defined contaminants in the removed groundwater. *{Engineer to determine applicability of this section}*
   6. Contractor shall adhere to locality noise ordinance for operation of dewatering pumps and generators.

C. Preparation of Foundation for Pipe Laying:
   1. Subgrade Stabilization:
      a. If subgrade of pipe trenches is in a frozen, loose, wet, or soft condition before construction is placed thereon, remove frozen, loose, wet, or soft material and replace with approved compacted material as authorized by Engineer in writing.
      b. Loose, wet, or soft materials, when approved by Engineer in writing, may be stabilized by a compacted working mat of well graded crushed stone.
         1) Over-excavate up to a depth of 2 FT below the design final subgrade elevation to remove the unsuitable material.
      c. Compact stone bedding material thoroughly into subgrade to avoid future migration of fines into the stone voids.
      d. Unstable trench bottoms caused by the Contractor's failure to dewater or Contractor operations shall be replaced at no additional compensation.
      e. All trenching and subgrade preparation shall be in accordance with the manufacturer's recommendations.

D. Laying Pipe in Trench:
   1. Clean each pipe length thoroughly and inspect for compliance to Specifications.
   2. Grade trench bottom and excavate for pipe bell and lay pipe on trench bottom.
   3. Install gasket or joint material according to manufacturer's directions after joints have been thoroughly cleaned and examined.
   4. Lay pipe in only suitable weather with good trench conditions.
      a. Never lay pipe in water except where approved by Engineer.
      b. Never use rock, brick, or other materials under the pipe while aligning the pipeline grade that may result in a fracture point for the PVC pipe.
      c. Never allow debris, angular materials or other unsuitable bedding and backfill materials to be in contact with PVC pipe.
   5. Seal open end of line with watertight plug if pipe laying stopped.
   6. Remove water in trench before removal of plug.

E. Joining Method - Push-On Joints:
   1. Install in accordance with AWWA C605
   2. Assemble push-on joints in accordance with manufacturer's directions.
   3. Lubricate spigot end of pipe to facilitate assembly without damage to gasket.
      a. Use lubricant that has no deteriorating effects on the gasket material

4. Assure the gasket groove is thoroughly clean.
5. For cold weather installation, warm gasket prior to placement in bell.
6. Taper of bevel shall be approximately 30 degrees with centerline of pipe and approximately 1/4 IN back.
7. Lining Up Push-On Joint Piping:
    a. Pipe deflections shall not exceed 50 percent of the maximum deflection values stated in manufacturer's written literature.
    b. Install shorter lengths of pipe in such length and number that angular deflection of any joint does not exceed 50 percent of the maximum deflection values stated in manufacturer's written literature.
    c. Measure and mark on the spigot end of the pipe the proper insertion point into the bell or fitting to prevent stress related damage.

F. Joining Method - Push-On Mechanical Joints (Restrained):
1. Install in accordance with AWWA C605.
2. Assemble mechanical joints in accordance with manufacturer's directions.
3. Bevel and lubricate spigot end of pipe to facilitate assembly without damage to gasket.
    a. Use lubricant that has no deteriorating effects on the gasket material
4. Assure the gasket groove is thoroughly clean.
5. For cold weather installation, warm gasket prior to placement in bell.
6. Taper of bevel shall be approximately 30 degrees with centerline of pipe and approximately 1/4 IN back.
7. Do not overstress bolts. The use of a torque wrench is required.
8. Install restraint system in accordance with manufacturer's directions and as required in the plans.

G. Installation of Saddles for Air Vents *{Engineer to review this requirement against HRSD Standard Detail}*
1. Approved stainless steel saddle shall be used to install air vent assembly at each high point along pipeline.
2. Field taps shall be made at each location for air vent assembly.

H. Polyethylene Encasement:
1. Wrap all ductile iron fittings in polyethylene encasement in full compliance to ANSI/AWWA C105/A21.5 unless otherwise shown on the plans or specified herein.
    a. Encase underground appurtenances required as part of installation.
    b. Make sections of tubing 2 FT longer than the fitting to be covered.
    c. Slip tube over fitting while fitting is suspended immediately before placing in trench.
    d. After installing in trench, pull tube ends over joint and overlap.
    e. Fasten securely in-place on each side of each joint with joint tape or strapping.
    f. Completely cover fittings and connections with film held snugly in-place with joint tape or strapping.

I. Backfilling Methods:
1. Comply with the following:
    a. Observe specific pipe manufacturer's recommendations regarding backfilling and compaction.
    b. Over excavation shall be filled with #57 stone at the contractor’s expense.
    c. Place backfill in lifts not exceeding 8 IN (loose thickness).
    d. Hand place, shovel slice, and pneumatically tamp all backfill to a depth of 6-IN above top of pipe.
    e. Compact each lift to specified requirements
    f. Compaction testing as defined in the Bid Documents for locations and frequency of testing to be performed by an independent testing firm.
    g. Avoid displacing joints and appurtenances or causing any horizontal or vertical misalignment, separation, or distortion.
2. Water flushing for consolidation is not permitted.

J. Tracer Wire:
   1. Install tracer wire in accordance with the following:
      a. Tracer wire shall be installed on all PVC pipe installations.
      b. Tracer wire shall be attached to the top of the pipe with plastic strapping at a minimum spacing of 10 FT.
      c. Tracer wire access boxes shall be installed at a maximum distance of 400 FT apart.
         1) Use of air vents or valve boxes as tracer wire access boxes is not permitted.
         2) Combination Tracer Wire/Cathodic Test Station box shall be used for the tracer wire access point.
         3) There shall be adequate wire in the tracer wire test station box to pull the wire 2 FT outside of the box.

K. Utility Marking Tape:
   1. Install utility marking tape in accordance with the following:
      a. Tape shall be placed no less than 6 IN and no greater than 12 IN below the proposed finished grade.

3.3 CONNECTIONS WITH EXISTING PIPE

A. Scheduling: Refer to Section "01520 – Maintenance of Pipe and Pumping Operations".

B. Locations of existing piping shown on the Contract Drawings shall be considered approximate.

C. Verify exact location of existing piping prior to laying connection piping which could alter the Work.
   1. Re-laying of pipe as a result of an incorrect alignment to an existing pipe shall be corrected.

D. Use suitable and proper fittings to suit conditions encountered.

E. Provide suitable equipment to dewater, drain, and dispose of liquid removed from existing pipe during connection.

F. Where connections necessitate employment of past installation methods not currently part of trade practices, utilize special piping components.

3.4 FIELD QUALITY CONTROL

A. Backfill Compaction Testing
   1. Compaction testing as required and defined in the Bid Documents for locations and frequency to be tested by an independent firm.

B. Testing of PVC Pressure Pipe:
   1. General Procedures for Hydrostatic Pressure Testing:
      a. Testing shall be in accordance with AWWA C605.
      b. Provide temporary restraints for exposed joints during test.
      c. Test buried piping after backfilling.
      d. Ports for testing shall be at 2-IN taps for proposed air vents or in plugs installed for testing. Under no circumstances shall the contractor tap the proposed force main for testing purposes.
      e. Test requirements:
         1) Test medium: Water.
         2) Pressure: 100 psi.
         3) Duration: 2 hrs.
      f. Perform pressure test using calibrated pressure gages and calibrated volumetric measuring equipment to determine leakage rates. *{Note to Engineer: coordinate with HRSD Project Manager as to a preference for Owner provided calibrated gauge verses Contractor provided calibrated gauge for specific hydrostatic test}*
         1) Contractor shall furnish and use a gauge that has been calibrated within 12 months of the planned use. Contractor shall provide to Engineer verification certification of stated calibration of the pressure test gauge.

2) Select each gauge so that the specified test pressure falls within the upper half of the gauge's range.
3) Notify the Owner's Representative a minimum of 2 business days prior to each test.
4) Owner's Representative shall be present during the test.

g. Completely assemble and test new piping systems prior to connection to existing pipe systems.

h. PVC Force Main Test Allowance: Testing allowance shall be defined as the quantity of water that must be supplied to the pipe section being tested to maintain a pressure within 5 psi of the specified hydrostatic test pressure. No installation will be accepted if the quantity of makeup water is greater than that determined by the formula:

$$\mathbf{Q} = \frac{\mathbf{LD}\sqrt{\boldsymbol{P}}}{\mathbf{148{,}000}}$$

Where:
Q = quantity of makeup water (gph)
L = length of pipe section being tested (FT)
D = nominal diameter of the pipe (IN)
P = average test pressure during the hydrostatic test (psig)

i. The Contractor shall bear the cost of all testing and inspecting, locating and remedying of leaks and any necessary retesting and re-examination.

j. Prepare hydrostatic test report and submit to Engineer in accordance with Section "01340 – Submittals".

C. PVC Gravity Sewer Allowable Leakage Rates:

1. Hydrostatic exfiltration and infiltration:

a. Leakage outward or inward shall not exceed 100 gallons per inch diameter per mile per day (2,400 GPD/MI maximum) at a minimum of 4 FT of head above the crown of the pipe.

b. Groundwater level is below the top of pipe:

1) Leakage rate: 200 gallon per inch diameter per mile per day at average head on test section of 3 FT.

a) Average head is defined from groundwater elevation to average pipe crown.

2) Acceptable test head leakage rate for heads greater than 3 FT:

a) Acceptable leakage rate (gallons per inch diameter per mile per day) = 115 x (actual test head to the 1/2 power).

c. Groundwater level is above the top of pipe:

1) Allowable leakage rate: 200 gallon per inch diameter per mile per day when depth of groundwater over top of pipe is 2 to 6 FT.

2) Leakage rate at heads greater than 6 FT: Allowable leakage rate (gallons per inch diameter per mile per day) = 82 x (actual head to the 1/2 power).

D. Tracer Wire:

1. The tracer wire shall be tested for continuity as part of the project acceptance.
2. Any breaks in the tracer wire shall be excavated and spliced to restore continuity.

END OF SECTION

SECTION 02530

HIGH-DENSITY POLYETHYLENE PIPING and FITTINGS

PART 1 - GENERAL

1.1 SUMMARY

A. Section Includes:
   1. High-Density Polyethylene (HDPE) piping and appurtenances for the use of installation of sanitary force main systems.

B. Related Specification Sections include but are not necessarily limited to:
   1. Division 00 - Bidding Requirements, Contract Forms, and Conditions of the Contract.
   2. Division 01 - General Requirements.
   3. Section 01340 – Submittals
   4. Section 02300 – Earthwork
   5. Section 02510 – Ductile Iron Pipe
   6. Section 02610 – Valves

1.2 QUALITY ASSURANCE

A. Manufacturer's Requirements
   1. All piping shall be made from compound conforming to a minimum cell classification of PE 445474C or PE 445574C per ASTM D3350.

B. Fusion Technician Requirements
   1. Fusion Technicians shall be fully qualified by the pipe manufacturer to install, handle and fuse HDPE pipe of the type(s) and size(s) being used. Qualification shall be current as of the actual date of fusion performance on the project.

C. Manufacturer and Installer Qualifications:
   1. Manufacturer shall have experience in manufacturing HDPE pipe of similar size and type to that specified herein. For a manufacturer to be determined acceptable for providing HDPE pipe, they must show evidence of manufacturing a minimum of 10,000 linear feet of HDPE piping and fittings and ten years' experience in the design and manufacturing of HDPE pipe and fittings of similar size, type and application (water/wastewater) as specified herein.
   2. Installer shall have experience in installing HDPE pipe and fittings and fusion of similar diameter and configuration as included herein. For installer to be determined acceptable for installing HDPE pipe and fittings, they must show evidence of installing a minimum of 5,000 linear feet of HDPE piping and fittings and ten years of experience for pipe and fittings of similar size, type and application (water/wastewater) as specified herein.

D. Pipe and HDPE fittings shall be by the same manufacturer and not have been used in any previous application. HDPE fittings shall be used only where specifically indicated on the plans. Fittings not identified as HDPE shall be ductile iron in accordance with Specification Section 02510.

1.3 REFERENCE STANDARDS:

A. ASTM International (ASTM):
   1. D3350, Standard Specification for Polyethylene Plastics Pipe and Fitting Materials
   2. D2683, Standard Specification for Socket-Type Polyethylene Fittings for Outside Diameter-Controlled Polyethylene Pipe and Tubing
   3. F1055, Standard Specification for Electrofusion Type Polyethylene Fittings for Outside Diameter Controlled Polyethylene and Crosslinked Polyethylene (PEX) Pipe and Tubing
   4. F2206, Standard Specification for Fabrication Fittings of Butt-Fused Polyethylene (PE)
   5. F714, Standard Specification for Polyethylene (PE) Plastic Pipe (DR-PR) Based on Outside Diameter
   6. D2837, The Hydrostatic Design Basis for Thermoplastic Pipe Materials
   7. F2164, Standard Practice for Field Leak Testing of Polyethylene (PE) Pressure Piping Systems Using Hydrostatic Pressure
   8. F2620, Standard Practice for Heat Fusion of Polyethylene Pipe and Fittings.
   9. D3216, Standard Specification for Butt Heat Fusion Polyethylene (PE) Plastic Fittings for Polyethylene (PE) Plastic Pipe and Tubing.

10. D3261, Standard Specification for Butt Heat Fusion Polyethylene (PE) Plastic Fittings for Butt Fusion Polyethylene (PE) Plastic Fittings for Polyethylene (PE) Plastic Pipe and Tubing.

B. American Water Works Association (AWWA):
   1. AWWA C906, Polyethylene (PE) Pressure Pipe and Fittings, 4 In. Through 65 In. (100 mm Through 1,650 mm), for Water Distribution and Transmission
   2. AWWA M55, PE Pipe – Design and Installation

1.4 SUBMITTALS

A. Refer to Specification "Section 01340 – Submittals" for requirements for the mechanics and administration of the submittal process.

B. Qualifications
   1. Manufacturer shall submit documented experience in manufacturing HDPE pipe and fittings similar in nature to the proposed work detailed in the Contract Documents.
   2. Contractor shall submit documented experience including project name, description, size and length of pipe, pipe materials, owner name and contact information and any other pertinent information for projects similar in nature to the proposed work detailed in the Contract Documents.

C. Testing Plan:
   3. Testing Plan: Submit a minimum of one week prior to testing and include at least the information that follows.
      a. Testing dates.
      b. Piping systems and section(s) to be tested as indicated on a copy of the approved piping layout drawings.
      c. Test type.
      d. Method of isolation.
      e. Calculation of maximum allowable leakage for piping section(s) to be tested.
   4. Certifications of Calibration: Testing equipment.
   5. Certified Test Report.

D. Shop Drawings:
   1. Refer to Specification "Section 01340 – Submittals" for requirements for the mechanics and administration of the submittal process.
   2. Product technical data for pipe and appurtenances including:
      a. Acknowledgement that products submitted meet the requirements of standards referenced.
         1) Acknowledgement shall be in the form of a letter or company-standard form containing all required data and signed by an officer of the manufacturing, fabricating or supplying company and at a minimum include:
            a) Name and location of the Work.
            b) Name and address of the Contractor.
            c) Quantity and date or dates of shipment and/or delivery to which the certificate applies.
            d) Name of the manufacturing or fabricating company.
      b. Certificates:
         1) Certifications shall be in the form of a letter or company-standard form containing all required data and signed by an officer of the manufacturing, fabricating, or supplying company.
      c. Test reports:
         1) All laboratory test reports, requested by the Owner, shall be provided at no additional cost and shall show the following information:
            a) Date or dates of testing. Test data should be the most current available and be within 5 years of the Bid opening.
            b) The specified requirements for which testing was performed.
            c) Results of the test or tests.
      d. Copies of manufacturer's written directions regarding material handling, delivery, storage and installation for each type of pipe.
   3. Fabrication and/or layout drawings with information including:
      a. Scale (minimum scale 1 IN equals 10 FT).
      b. Dimensions of pipe lengths and fittings.
      c. Invert or centerline elevations of pipe crossings.
      d. Acknowledgement of bury depth requirements.
      e. Details of transitions, tapping locations, thrust blocks, and related appurtenances.

f. Line slopes and vent locations.

4. Details of temporary restraints required for testing.

E. Fusing

1. Submit documents related to execution of fusion process, including but not limited to:
   a. Certificates for all workers performing fusion, demonstrating they have been fully trained on equipment to be used for the fusion
   b. List of equipment to be used during fusion process
   c. Literature from the manufacturer/supplier of the fusion equipment that indicated required temperature and pressure to which the pipe shall be heated and pressed together and where such readings are indicted on the equipment.

F. Field quality control documents:

1. Test reports summarizing results of the following final field tests:
   a. Backfill Compaction Test
   b. Hydrostatic Pressure Test
   c. Leakage Test

G. Lay Schedule

1.5 DELIVERY, STORAGE AND HANDLING

A. The Contractor shall use all means necessary to protect pipe materials, fittings, valves and products before, during, and after installation. Care shall be taken in loading, transporting, and unloading to prevent damage to the pipe, pipe linings and pipe coatings. The Contractor shall comply with AWWA M55 (HDPE), and, the referenced AWWA Standards for shipping, handling and storage procedures.

B. Protect pipe and appurtenances during handling using methods recommended by the manufacturer and approved by the Engineer.

1. Pipe shall be transported to the job site on padded bunks or oak timbers and secured with nylon tie down straps to adequately protect the pipe and coating.
2. Use of bare cables, chains, hooks, metal bars or narrow skids in the contact with coated and/or lined pipe is not permitted.
3. Handle only from the outside of the pipe and fittings. Lifting by inserting forks into the pipe or fittings is not permitted.
4. No metal tools or heavy objects shall be permitted to come in contact unnecessarily with the finished coating.

C. Prevent damage to pipe during transit.

1. Pipe with noticeable abrasions, scars and blemishes shall be rejected. If repair of satisfactory quality cannot be achieved, replace damaged material in its entirety immediately.
2. Any damage to linings or coatings discovered during the examination shall be repaired in accordance with the manufacturer's recommendations to the satisfaction of the Owner, before proceeding with the Work
3. The Owner reserves the right to reject defective material shipped to and/or stored on site, and to examine the same to determine if damage has occurred prior to installation.

D. Store materials in a manner to keep interior free from dirt and foreign matter and protect from the elements.

1. The pipe shall not be stacked higher than the limits recommended by its manufacturer. The bottom tier shall be kept off the ground on timbers, or other method approved by the Owner. Stacking shall conform to manufacturer's recommendations and/or AWWA M55.
2. Storing on stones or other hard material that can damage the pipe exterior is not permitted.
3. Storing pipe on top of pipe is not permitted.
4. Materials subject to corrosion shall be protected in accordance with the manufacturer's recommendations.
5. Materials subject to UV degradation shall be protected in accordance with the manufacturer's recommendations.

PART 2 - PRODUCTS

2.1 ACCEPTABLE MANUFACTURERS

A. Subject to compliance with the Contract Documents, the following manufacturers of Pressure Rated HDPE systems are acceptable:
   1. HDPE Pipe and Fittings:
      a. CPChem Performance Pipe
      b. JM Eagle Manufacturing Pipe, Inc.
      c. Or approved equal.

B. Submit request for substitution in accordance with Specification "Section 00700, General Conditions."

2.2 HDPE PIPE

A. Pipe:
   1. HDPE pipe shall be PE4710 HDPE in accordance with ASTM F714 and AWWA C906-15 and shall have a nominal DIPS (Ductile Iron Pipe Size) outside diameter unless otherwise specified. The nominal size, pressure classification rating, and SDR of the pipe shall be as specified in the Contract Documents.
   2. A Pipe shall be homogeneous and uniform throughout; shall be free of injurious defects such as visible cracks, holes, foreign inclusions, voids, and blisters; and shall have uniform color and physical properties according to the provisions of AWWA C906-15.
   3. Commercial virgin PE Compounds shall meet ASTM D3350 physical property requirements and shall be classified per ASTM D3350 as shown in Table 1 of AWWA C906-15. The compound shall have HDB (Hydrostatic Design Basis) ratings at 73°F (23°C) and at 140°F (60°C) and HDS (Hydrostatic Design Stress) ratings at 73°F (23°C) determined in accordance with ASTM D2837 and PPI TR-3 (Policies and Procedures for Developing Recommended Hydrostatic Design Stress for Thermoplastic Pipe Materials).
   4. The PE Compound in the pipe shall contain color and ultraviolet (UV) stabilizer meeting the requirements of ASTM D3350 Codes C or E. Code C compounds shall contain 2 to 3 percent carbon black when material from the pipe is tested in accordance with Section 4.3.11 of AWWA C906-15. Code E compounds used for solid color pipe, color stripes, or color layer (shell) shall contain sufficient UV stabilizer to protect the pipe against UV degradation for at least 24 months of unprotected outdoor exposure. Color PE compounds used for stripes or color layers shall be of the same materials designation codes as the pipe material, varying only by color and UV stabilizer.
   5. Clean rework materials derived from pipe production by the same manufacturer are acceptable as part of a blend with virgin PE compound meeting section 4.2.1 of AWWA C906-15 for the production of new pipe, including sections 4.2.3.1, 4.2.3.2, 4.2.3.3 and 4.2.4.
   6. PE fittings or components shall be molded. Molded fittings shall meet the requirements of AWWA C906-15 and the requirements of ASTM D2683 for socket-type fittings, or ASTM D3261 for butt-type fittings.
   7. High Density Polyethylene pipe shall be extruded with plain ends. The ends shall be square to the pipe and free of any bevel or chamfer. There shall be no bell or gasket of any kind incorporated into the pipe.
   8. High Density Polyethylene pipe shall be manufactured in a standard 40' nominal length or custom lengths as specified and shall be black with a green identification stripe.
   9. Pipe shall be marked as follows:
      a. Nominal pipe size
      b. HDPE
      c. Dimension Ratio, Standard Dimension Ratio, or Schedule
      d. AWWA pressure class, or standard pressure rating for non-AWWA pipe, as applicable.
      e. AWWA standard designation number, or pie type for non-AWWA pipe, as applicable.
      f. Extrusion production-record code.
      g. Trademark or trade name
      h. Cell Classification and/or HDPE material code may also be included.
   10. HDPE pipe for this project shall be as indicated on the drawings, ductile iron pipe size (DIPS), DR 17.

B. Utility Marking Tape:
   1. Subsurface utility marking tape shall be of a durable, metalized, plastic film, bright green in color, imprinted with the legend "CAUTION: SEWER BELOW".
      a. The utility marking tape shall be manufactured by Griffolyn Company or approved equal.

C. Tracer Wire:

1. Tracer Wire shall be attached to the pipe every 10 linear feetwith plastic strapping. The wire shall terminate at every tracer wire termination box or air vent. Tracer wire shall not be terminated in valve boxes. The wire shall be sufficient length to be able to be coiled one foot at each end of tracer wire run and shall be continuous 10 gage solid copper wire with plastic coating. The tracer wire installation shall be considered complete when the owner can trace the entire length of the pipeline with tracing equipment. Any breaks in the wire shall be repaired by the contractor prior to project acceptance.

2.3 FUSION JOINTS

A. Unless otherwise specified, high density polyethylene pipe lengths shall be assembled in the field with butt-fused joints. The Contractor shall follow the pipe manufacturer's written guidelines for this procedure. All fusion joint shall be completed as described in this specification.

PART 3 - EXECUTION

3.1 INSPECTION

A. Items of material furnished under this Section shall be subject to inspection by the Owner's representation prior to installation.
   1. Carefully examine material for defects, and no not install material which is known to be defective.
   2. Replace all material found defective in manufacture or damaged in transit or handling at the Contractor's expense.
   3. Items found not to be in compliance with this Section shall be removed from the project site and replaced with items that have been approved for installation.
   4. Inspections and approvals do not relieve the Contractor from complying with the Contract Documents.
   5. The HRSD Representative reserves the right to reject all defective pipe, fittings, and appurtenances shipped to the job site or stored on the site. The HRSD Representative shall examine the pipe and determine if the pipe is damaged prior to the installation. Failure of the HRSD Representative to detect damaged pipe shall not relieve the Contractor from his total responsibility for the pipe if it leaks or breaks after installation. Classify defective pipe as follows:
      a. Damage to exterior.
      b. Damage to interior.
      c. Pipe out of round.
      d. Denting or gouges in plain end of pipe.
      e. Any other item which would result in the potential failure of the pipe.
      f. If the exterior or interior surface of any section of pipe which is nicked, cut or chipped greater than 0.5 inch in diameter (or 1 inch length) or greater in depth than 10% of the wall thickness shall be cut out and disposed.

3.2 CLEANING PIPE AND FITTINGS

A. Clean and remove all foreign matter from each pipe, fitting before placing in the trench. Should foreign material or contaminates be observed in the pipe, cease work until foreign material or contaminated pipe is decontaminated or removed.

B. Close open ends of pipe with a watertight plug at all times when pipe laying is not in progress

3.3 ALIGNMENT AND GRADE

A. The temporary force main shall be laid above ground, except in those areas designated on the Drawings. The Contractor shall be responsible for locating underground utilities and obstructions within the areas of buried crossings and adjusting the bury depth of the force main to avoid said utilities and obstructions.

3.4 PIPE INSTALLATION

A. General Requirements: Use proper and suitable tools and appliances for the proper and safe handling, lowering into trench and laying of pipes.
   1. Sections of pipe should be joined into continuous lengths on the jobsite above ground. The joining of the pipe shall be done in such a manner not to interfere with vehicular and/or pedestrian traffic within the public right-of-way.

2. The joining method shall be butt fusion performed in accordance with the pipe manufacturer's recommendations. The butt fusion process shall produce a weld strength equal to or greater than that of the pipe.
3. Thoroughly clean the pipes and fittings before installation. Pipes and fittings shall be kept clean until the acceptance of the completed work.
4. Take necessary precautions to prevent the floating of the pipe line by the accumulation of water in the trench, or the collapse of the pipe line from any cause. Should floating or collapse occur, restoration shall be at the Contactor's expense.
5. Close all openings in the pipe line with watertight plugs when pipe laying is stopped at the close of the day's work for other reasons, such as rest breaks or meal breaks.
6. Place enough backfill over the center sections of the pipe to prevent floatation.

B. High Density Polyethylene Pipe Care
1. The HDPE pipe shall be handled with care to minimize the possibility of it being cut, kinked, gouged, or otherwise damaged. The use of cables or hooks will not be permitted.
2. Sections of the HDPE pipe damaged, cut, or gouged shall be repaired by cutting out the section of damaged pipe and rejoining.

C. Joining Method:
1. Fusing
   a. The manufacturer will recommend the best joining method based on the project needs.
   b. Pipe sections shall be joined on the job site above ground into continuous lengths by the thermal butt-fusion or electrofusion method, which shall be performed in strict accordance with the manufacturer's recommendations. The butt-fusion equipment used in the joining procedures shall be capable of meeting all conditions recommended by the pipe manufacturer, including, but not limited to, temperature requirements of 400° F, optimum 425° F and maximum 450° F unless otherwise governed by manufacturer's recommendations; alignment, and 75 psi interfacial fusion pressure. Butt-fusion joining shall be 100% efficient and shall provide a joint weld strength equal to or greater than the tensile strength of the pipe. Socket-fusion, extrusion welding or hot gas welding of HDPE shall not be used for pressure pipe applications. Flanges, unions, grooved-couplers, transition fittings, and some mechanical couplers may be used to mechanically connect HDPE pipe without butt-fusion, if specified in the Contract Documents and approved by the manufacturer.
   c. The fusion joint must be equal to or stronger than the strength of the pipe.
   d. The face of opposing pieces of pipe to be fused shall be machined smooth in accordance with the equipment supplier's requirements.
   e. Install in accordance with AWWA standards.
   f. In inclement weather, the fusion operation should be enclosed or shielded to avoid precipitation or excessive wind. The joint area and its parts that are being fused must be completely dry. No liquid of any kind running through the pipe or its fittings is permissible.
   g. No attempt by the Contractor shall be made to shorten cooling times of fusion by applying wet cloths, water, or the like. Pipe shall not be handled or installed in the trench until the joints are sufficiently cooled in accordance with manufacture's recommendations to prevent weakening the joint.
   h. When removing pipe from the butt fusion machine and pulling into place, the Contractor must use lifting slings and pulling leads in good condition.
2. Joining by Other Means
   a. Polyethylene pipe and fittings may be joined to other materials by means of:
      1) Flanged connections (flange adapters and backup rings)
      2) Mechanical couplings designed for joining polyethylene pipe or for joining polyethylene pipe to another material, and
      3) MJ adapter.
   b. When transitioning between plain-end DIP and HDPE pipe, a DIPS Bell MJ adapter with kit for DIP pipe shall be supplied from ISCO Product Catalog or approved equal.
   c. When joining by other means, the installation instructions of the joining device manufacturer shall be observed. All materials must be approved through a signed shop drawing submittal.

3.5 CONNECTIONS WITH EXISTING PIPING

A. Connections or interconnection to the existing force main shall be made at locations shown on the Drawings in accordance with details shown on the Drawings and Specifications. Prior to making connections into existing piping systems, the contractor shall:
   1. Field verify location, size, pipe material, and piping system of the existing pipe.
   2. Obtain all required fittings, which may include saddles, sleeve type couplings, flanges, tees, or others as shown in the construction documents.
   3. Have installed all temporary pumps and/or pipes in accordance with established connection plans.

B. Unless otherwise approved, new piping system shall be completely assembled and successfully tested prior to making connections into existing pipe systems.

C. Provide suitable equipment to dewater, drain, and dispose of liquid removed from existing pipe during connection.

D. The Owner and Contractor shall have a coordination meeting with the Owner's personnel at least 10 days prior to the planned force main shutdown and provide a written Work Plan. The Owner shall review the Work Plan and either approve it or meet with the Contractor within 3 business days after receipt of the schedule to satisfactorily modify it.

E. The Contractor shall follow the procedures herein for any joints of the new force main and fittings that have not been previously hydrostatically pressure tested:
   1. The Owner reestablishes services in the line.
   2. One half hour will elapse, after air venting is complete by the Owner.
   3. Joints will be visually inspected for signs of leakage by Owner or Owner’s Representative.
   4. Any leakage noted shall be corrected to the satisfaction of the Owner.
   5. After satisfactory visual testing of exposed joints by the Owner and any corrective action, the Contractor shall wrap the pipe and/or fitting as required and immediately proceed to backfill the pipe and restore to grade conditions or for reestablishment of traffic if in a roadway. Soil backfill compaction tests may be specified by the Owner for work within roadway travel lanes.
   6. If specified, utility warning tape shall be installed above the connection in accordance with the Contract Documents.
   7. Any joints not inspected by the Owner will not be approved and shall be excavated for inspection.

F. Careful attention shall be given to the depth of new pipelines at points where tie-ins to existing mains are to be made. The existing main shall be uncovered in the presence of the Owner and the new pipeline set to proper elevation to provide for a perpendicular and level tie-in.

3.6 FIELD QUALITY CONTROL

A. Installation
   1. The manufacturer’s representative shall be made available a minimum of 2 working days (time on site) during the project when requested by the Owner, including the first 2 Days of pipeline installation.
   2. The cost for the services of the manufacturer’s representative, including expenses, shall be considered incidental to the project and will not be paid separately.

B. Testing of Pipe:
   1. General Procedures for Hydrostatic Pressure Testing:
      a. The Contractor shall furnish all pumps, fittings, and gauges as necessary to fill the line with water, expel air from the system, and pressurize the pipeline for the tests.
      b. The Contractor will be responsible for providing proper safety measures during pressure testing operations.
      c. Testing shall be in accordance with ASTM F2164 and per the Manufacturer’s requirements as approved by the HRSD Representative.
      d. The Contractor shall test the line prior to contacting the Owner for the formal pressure test.
      e. There shall be no leakage in heat-fusion joined HDPE pipe. In addition, heat-fusion joined HDPE pipe pressure testing shall be in accordance with ASTM F2164 and shall also comply with the following:
         1) Before testing, heat fusion joints are to be completely cooled.
         2) All parts of the test section shall be restrained against movement. Temporarily remove, restrain, or isolate expansion joints and expansion compensators before starting.
         3) Observe all safety precautions identified in ASTM F2164.

f. Retesting - If retesting is necessary, depressurize the test section per ASTM F2164 and correct any faults/leaks. Allow the test section to “relax” for at least 8 hours before repressurizing and repeat the Initial expansion and test phases as indicated above.

C. Testing Procedure

1. All HDPE mains shall be field-tested. Contractor shall supply all labor, equipment, material, gages, pumps, meters and incidentals required for testing. Each main shall be pressure tested upon completion of the pipe laying and backfilling operations, including placement of any required temporary roadway surfacing. The Contractor shall provide all temporary restraint at terminal locations prior to filling and testing the line. Testing against valves shall not be permitted.
2. The Contractor shall submit his plan for testing to the HRSD Representative for review prior to starting the test and shall notify the Engineer a minimum of 48 hours prior to test.
3. All force mains shall be tested at 100 PSI unless otherwise noted.
4. The total test time including initial pressurization, initial expansion, and the time at the test pressure, must not exceed eight (8) hours. If the pressure test is not completed due to leakage, equipment failure, etc., the test section shall be depressurized, and allowed to relax for at least eight (8) hours before bringing the test section up to pressure again.
5. Pressure testing procedure shall be per Manufacturer’s recommendations or as follows:
   a. Fill lines slowly with water. Maintain flow velocity less than 2 feet per second.
   b. Expel air completely from the line during filling and again before applying test pressure. Air shall be expelled by means of taps at point of highest elevation.
   c. Apply initial test pressure and allow to stand without makeup pressure for three hours, to allow for diametric expansion or pipe stretching to stabilize.
   d. After this equilibrium period, apply the specified test pressure and turn the pump off. The final test pressure shall be held for three hours.
   e. Upon completion of the test, the pressure shall be bled off from a location other than the point where the pressure is monitored. The pressure drop shall be witnessed by the HRSD Representative at the point where the pressure is being monitored.
6. Allowable amount of makeup water for expansion during the pressure test shall conform to ASTM F2164. If there are no visual leaks or significant pressure drops during the final test period, the installed pipe passes the test.
7. If a pressure drop greater than the manufacturer’s recommended loss is observed, the Contractor shall, at his/her own expense, locate and repair the cause of leakage and retest the line.
8. All visible leaks are to be repaired regardless of the amount of leakage.
9. Visual Leak Test
   a. Joints at tie-ins that cannot be hydrostatically tested shall be visually inspected for leaks in the presence of the HRSD Representative in accordance with this specification.
   b. The contractor shall not wrap or backfill any joints of the new force main that have not been previously tested until the force main has been placed back in service, operating pressure restored, and the pipe work inspected by the HRSD Representative
   c. Any joints not inspected by the HRSD Representative will not be approved and shall be excavated for inspection. All joints and connections not pressure tested shall be visually inspected for leaks by the HRSD Representative in accordance with the following procedure:
      1) HRSD re-establishes service in the line and vents air.
      2) One half hour will elapse after air venting is complete.
      3) Joints will be visually inspected for signs of leakage. No leakage shall be permitted.
      4) Any leakage noted shall be corrected to the satisfaction of HRSD Representative.

END OF SECTION

SECTION 02531
LINE STOPS/BYPASS ON SANITARY SEWER FORCE MAIN SYSTEMS

1.0 GENERAL

1.1 Description of Work

A. The Contractor shall furnish all labor, supervision, material (except as herein provided), tools, equipment, supplies, and services; and, shall perform all Work necessary for the installation of line stopping fittings and equipment and bypass piping on HRSD sanitary sewer force main systems as indicated in the Contract Documents. Contractors shall utilize a qualified Line Stop subcontractor. Contractors shall not self-perform line stops.

1.2 Qualifications

A. Refer to Article 3 – Qualifications of Bidders of "Section 00200 - Instructions to Bidders".

1.3 Submittals

Submittals shall be made by the Contractor in accordance with the procedures set forth in "Section 01340 – Submittals" and as described below:

A. Documentation of Experience/Qualifications: Refer to Article 3 – Qualifications of Bidders of "Section 00200 - Instructions to Bidders".

B. Calculations – Submit head loss calculations for proposed line stop/bypass configuration based on flow/pressure data furnished by the Owner. Total head loss shall between line stop units shall include losses through the tapping sleeve, plugging head, line stop housing unit, all bends and fittings, and the bypass piping.

C. Measurements: Submit all field measurements taken to verify pipe outside and inside diameter, wall thickness, etc.

D. Manufacturer's catalog cuts, technical data, operation and maintenance data, and/or shop Contract Documents are required for the following components (shop drawings shall be drawn to a scale sufficiently large to show all pertinent aspects of the item and its method of connection to the work):

1. Sketches and drawings of line stop equipment including dimensions and weights
2. Field sketch of line stop locations based on exploratory excavation
3. Written procedure for installing and operating line stop equipment
4. Tapping fittings
5. Completion plug
6. Coatings for completion plug and flange
7. HDPE bypass piping and fittings
8. Automatic air vents
9. Section view of line stop equipment showing folding plugger engaged in stop position

2.0 PRODUCTS

2.1 Line Stop Fittings

A. General: Stopper head, line stop fitting, completion plug, and blind flange shall be pressure rated at 150 PSI. All line stop equipment shall be suited for vacuum conditions.

B. Stopple insertion head gaskets: Contractor must have, at their disposal numerous size stopple cups/gaskets in ¼" increments. Contractor will be required to bring a minimum of three (3) stopple cups/gaskets to the job site: One (1) will be of a size that is anticipated to fit the inside diameter of the pipe, the other two (2) will be ¼" larger and ¼" smaller than that size. Contractor must have the ability to obtain any size stopple cup/gasket within 24 hours of tapping the pipe.

C. After completion of fabrication, all fittings shall be coated both internally and externally with a heavy coat of corrosion resistant metal primer of fusion bonded epoxy coating per AWWA C-213.

D. Tapping Fittings for Concrete Cylinder Pipe

1. The tapping sleeve shall be manufactured in three (3) sections and have a separate gland which permits the installation of the sleeve prior to cutting of the pre-stressing wires. The lower half of the tapping sleeve shall have multiple straps that are contoured to the outside pipe diameter and will bolt the top half of the sleeve that has also been contoured to the outside diameter of the pipe. The top half will be provided with foam outer seals, two (2) grout outlet horns and an outer neck flange assembly. The third component shall consist of the inner neck flange assembly that is provided with a contoured elastomeric ring neck seal and terminating in a locking flange to permit recovery of the temporary control valve under pressure at the completion of the project.

2. Tapping Saddle Body: The tapping saddle body shall be ASTM-283 Grade C or ASTM A-36 steel. The back portion of the saddle shall use support straps that draw the saddle plate to the pipe surface in a uniform manner. Straps will be manufactured from rolled steel in accordance with ASTM A-36.

3. Outer Neck Assembly and Bottom Draw Flange: The outer neck assembly that is connected to the upper saddle plate shall be ASTM-283 Grade C or ASTM A-36 steel. The bottom draw flange shall be in accordance with AWWA C-207-B minimum thickness and shall mate to the top draw flange of the inner neck assembly. Flange material shall be ASTM-283 Grade C or ASTM A-36.

4. Inner neck assembly will be manufactured from ASTM A-283 Grade C or ASTM A-36 steel. The interior of the inner neck assembly shall be factory coated with cement mortar or a minimum of 15 mils of epoxy paint in accordance with AWWA C-213. The inner neck assembly shall be fabricated having two flanges: a top draw flange facing downward and a tapping flange facing upward. The top draw flange will mate to the outer neck assembly bottom draw flange. A pressure plate (ASTM A-283 Grade C) shall be gusseted to the top draw flange. The tapping flange used to connect the temporary control valve will be fitted at the factory with a completion plug flange.

5. The gasket for sealing to the gland-nozzle assembly to pipe's steel cylinder shall have a broad flat sealing surface. Gasket material shall be Buna-N with a Shore A durometer range between 50-70.

6. The inner neck flange will be provided from the factory, with an internal locking mechanism that permits recovery of the temporary control valve used in hot tapping/stopping process upon project termination.

7. Fasteners: All external bolting, studs and nuts that shall become a permanent part of the fitting installation shall be corrosion resistant, high strength, low alloy (AWWA C-111, ANSI 21.111).

E. Tapping Fittings for Reinforced Concrete Pipe/Ductile Iron/Cast Iron/Asbestos Cement Pipe

1. All tapping saddles will be two-piece, made with full front and back. Steel run sections will conform to and re-enforce the existing pipe. All steel for saddles will conform to ASTM A-283 Grade C or ASTM A-36 steel. Saddles will have a recess for installation of a Buna-N rubber gasket around the hot tapping outlet. All bolts will be corrosion resistant alloy material (per AWWA C-111, ANSI 21.11). There shall be a ¾" test outlet placed into the nozzle branch outlet, at the factory for site pressure testing, after saddle has been installed. Plug threads shall be coated to prevent galling.

2. Tapping saddle body shall be ASTM A-283 Grade C or ASTM A-36 steel. Saddle plate thickness shall be in accordance with the design criteria for the entire fitting. A minimum wall thickness for saddle plates shall be 0.375". All welding of materials shall be in accordance with applicable code standards. Saddle plates shall be designed to permit longitudinal bolting of the top and bottom halves around the pipe.

3. Nozzles attached to the saddle plates and used for hot tapping shall be constructed of A-106 Grade B steel or ASTM A-283 or A-36 steel. Nozzle thickness will be as a minimum standard steel pipe wall thickness (0.250").

4. Fasteners: All external bolting, studs and nuts that shall become a permanent part of the fitting installation shall be corrosion resistant, high strength, low alloy (AWWA C-111, ANSI 21.111).

F. Line Stop Housing

1. For instances where the bypass is proposed through the line stop housing, the use of any type of flow-through style strainer that is placed into the flow path once the folding plugger is extended into its stopped position will not be permitted.

2.2 Completion Plugs:

A. All flanges used for line plugging will be manufactured from ASTM-A-105 grade or equal and shall be machined to accept completion plug.
B. The completion plug shall be manufactured from carbon steel plate in accordance with ASTM A-36 with circumferential groove to contain a compressible "O" ring to seal pressure tight against the bore of the flange. Completion plug locking mechanisms shall consist of ring segments or steel leaves that lock from or into the flange bore. Set screw style locking mechanisms that tighten against wedges set against the completion plug and have removable thread inserts within the tapping fitting flange are also acceptable. Set screws set directly against completion plugs and/or without removable thread inserts within the tapping fitting flange will NOT be acceptable.
C. Blind flanges for mating with line plugging flanges shall be in accordance with ASTM A-181 or ASTM A-105 grade steel. Minimum thickness shall be AWWA C-207, Class D.
D. Flange gaskets shall be of non-asbestos composition and will be designed to mate to the inner bore and inner bolt circle of the line plugging flange. All gaskets will be at least 0.125" minimum thickness.

2.3 Temporary Bypass Piping:

A. Bypass piping shall be watertight HDPE pipe joined by butt-fusion method in strict accordance with the

manufacturer's recommendations.

B. Bypass piping shall be DR 17 minimum HDPE piping.

C. Approximate location of the bypass piping is shown on the plans. The exact location of the bypass piping shall be determined by the Contractor following field investigations.

D. An automatic 2-inch air vent shall be placed on the bypass piping at any localized high points to vent air during start-up and operation.

E. The bypass piping shall include a tee and branch valve for controlled dewatering of residual sewage after the bypass piping is taken out of service.

F. In-line isolation valves shall be provided on the bypass piping at each line stop location.

3.0 EXECUTION

3.1 Line Stop Installation Requirements

A. Refer to Specification Sections "01040 – Coordination" and "01520-Maintenance of Pipeline and Pumping Operations" for meeting and coordination requirements.

B. Prior to starting any work related to the line stops, the Contractor shall perform explorations on the existing force main pipe to determine joint locations and the locations for the line stops. A sketch of the field verified information shall be included in the shop drawings. The Contractor shall locate the proposed line stop such that there is a minimum of one (1) full stick of pipe between the line stop and the force main connection point.

C. If other utilities or obstructions encroach the line stop fitting zone, the Contractor shall notify the company performing the line stop for exact clearance required for drilling, plugging and completion machines.

D. The length of pipe receiving the line stop fitting must be completely free and clear of corporation stops, air release valves, joints or any other irregularities that would prevent the installation of the line stop fitting.

E. The line stop fitting shall be tested after being installed before the final concrete collar is poured around the force main.

1. Coordinate with Owner and Owner's Representative for allowable test pressure.
2. Allowable leakage shall be zero and test duration shall be one (1) hour.
3. The line stop fitting shall be tested and accepted prior to tapping the force main. The pressure test shall be performed in the presence of the Owner's representative.

F. For the initial installation and pressure equalization of the line stops, if necessary, the Contractor is permitted to tap a section of the existing force main that is to be abandoned. Additional taps of the new or existing force main that is to remain in service will not be permitted.

G. The line stop unit shall be equipped with a pressure gauge to monitor line pressures on the active side of the force main for the duration of the line stop.

H. Once line stops are inserted, the Contractor shall work continuously until connections are made and service is returned to the force main.

I. A completion plug and blind flange shall be installed on the line stop fitting (on the force main that is to remain in service) prior to backfilling.

J. GPS coordinates of the center of the blind flange shall be obtained by the Contractor and recorded on the Record Drawings and Valve Guides.

3.2 Concrete Support/Reaction Blocking Requirements

A. The shear key floor, concrete support blocking, and reaction blocking are provided as a means of thrust restraint and support of the line stop fitting, valves, equipment, etc. The Contractor shall use care at all times when performing work on or near the HRSD force main to prevent differential settlement, excessive loading, etc., which may damage the force main.

B. Line stop Blocking Basis of Design: Operating Pressure = **30 PSI**. *{to be confirmed by Engineer}*

C. All concrete shall be air entrained. High early strength, VDOT Class A3 (minimum). The Contractor is to prepare test cylinders and provide certified testing to ensure the required compressive strength is reached prior to mounting the tapping machine and line stop equipment.

D. Thrust surface area of floor is based upon bearing against undisturbed soil of 1,500 PSF minimum bearing strength. Contractor shall verify actual soil conditions and increase bearing surface area as required. Reduction of the bearing surface area will not be permitted.

E. All exposed joints of the force main must be supported with concrete support piers.

F. Concrete support and reaction blocking for line stop fitting shall be poured immediately after pressure test of assembled line stop fitting. Blocking must engage shear keys in concrete floor. Top of blocking shall be poured to cover the top of the line stop fitting where possible and not encroach onto lower bolts of the gate valve.

G. The Contractor shall utilize straps instead of chains, cables, or unpadded forks to handle pipe.

3.3 Bypass Piping Installation Requirements

A. Prior to connecting bypass piping to line stop housing, bypass piping shall be tested at 50 PSI.

B. The Contractor shall provide a means for minimizing pipe movement during pressurization and operation.

C. Test pressure shall be applied to the bypass piping for three (3) hours to allow for initial expansion of the pipe. After three (3) hours, reduce initial test pressure by 10% and monitor pressure for one (1) hour. If the test pressure remains steady (to within 5% of target value) for one (1) hour, no leakage is indicated.

END OF SECTION

SECTION 02610
VALVES

PART 1 - GENERAL

1.1 SUMMARY

A. Section Includes:
1. Gate Valves.
2. Eccentric Plug Valves.
3. Automatic Air Release Valves
4. Ball Valves for Air Release
5. Corporation Stops.

B. Related Specification Sections include but are not necessarily limited to:
1. Division 00 - Bidding Requirements, Contract Forms, and Conditions of the Contract.
2. Division 01 - General Requirements.
3. {*Section XXXXX - Trenching, Backfilling and Compaction for Utilities*}.
4. 02510 – Ductile Iron Pipe and Fittings

1.2 QUALITY ASSURANCE

A. Referenced Standards:
1. ASTM International (ASTM):
   a. A48, Standard Specification for Gray Iron Castings.
   b. A126, Standard Specification for Gray Iron Castings for Valves, Flanges, and Pipe Fittings.
   c. A276, Standard Specification for Stainless Steel Bars and Shapes.
   d. A536, Standard Specification for Ductile Iron Castings.
   e. B16, Standard Specification for Free-Cutting Brass Rod, Bar, and Shapes for Use in Screw Machines.
   f. B584, Standard Specification for Copper Alloy Sand Castings for General Applications.
   g. D2240, Standard Test Method for Rubber Property-Durometer Hardness.
2. American Water Works Association (AWWA), latest revision:
   a. C500, Standard for Metal-Seated Gate Valves for Water Supply Service.
   b. C509, Standard for Resilient-Seated Gate Valves for Water Supply Service.
   c. C515, Standard for Reduced-Wall, Resilient-Seated Gate Valves for Water Supply Service.
   d. C517, Resilient-Seated Cast Iron Eccentric Plug Valves.
   e. C550, Standard for Protective Epoxy Interior Coatings for Valves and Hydrants.
3. Manufacturers Standardization Society of the Valve and Fittings Industry Inc. (MSS):
   a. SP-9, Spot Facing for Bronze, Iron, and Steel Flanges.
   b. SP-70, Cast Iron Gate Valves, Flanged and Threaded Ends.
   c. SP-72, Ball Valves with Flanged or Butt-Welding Ends for General Service.
   d. SP-110, Ball Valves; Threaded, Socket-Welding, Solder Joint, Grooved and Flared Ends.

1.3 DEFINITIONS

A. The following are definitions of abbreviations used in this section:
1. SWP: Steam working pressure.
2. WOG: Water, oil, gas working pressure.
3. CWP: Cold Working Pressure

1.4 SUBMITTALS

A. Shop Drawings:

1. See Specification "Section 01340 – Submittals" for requirements for the mechanics and administration of the submittal process.
2. Bi-directional hydrostatic testing of valves shall be conducted by the valve manufacturer. A certificate of compliance, including test methods and results, shall be provided to HRSD for each valve and included with the shop drawing submittal to Owner and Engineer. Minimal acceptable test pressures shall be in accordance with applicable AWWA valve standards (C-500, C-509, C-515 and C-517) for the valve type to be installed.
3. Certified maximum operating torque on the valve shaft and the mechanical advantage of the geared actuator shall be provided by the manufacturer and included in the shop drawing submittal to HRSD.
4. Product technical data including:
   a. Acknowledgement that products submitted meet requirements of standards referenced.
5. Operation and Maintenance Manuals:
   a. Refer to Specification "Section 01340 – Submittals" for requirements for the content of Operation and Maintenance manuals.

1.5 DELIVERY, STORAGE, AND HANDLING

A. Protect valves, linings, and coatings during handling using methods recommended by the manufacturer. Use of bare cables, chains, hooks, metal bars, or narrow skids in contact with coated pipe is not permitted.

B. Prevent damage to valves during transit. The operator nut and stem for gate valves and plug valves shall be protected during shipping and installation. Repair abrasions, scars, and blemishes. If repair of satisfactory quality cannot be achieved, replace damaged material immediately.

PART 2 - PRODUCTS

2.1 RESILIENT WEDGE SEATED GATE VALVES

A. Valves 14 IN and smaller shall be resilient wedge gate valves to be installed in the vertical position only.
   1. Vertical position refers to the position of the traveling gate.

B. Acceptable Manufacturers:
   1. Subject to compliance with the Contract Documents, the following manufacturers are acceptable:
      a. Clow.
      b. Mueller.
      c. American Flow Control.
      d. M&H.
      e. U.S. Pipe Valve and Hydrant.
      f. Or Approved Equal

C. Design Requirements:
   1. Valves shall be designed for a working pressure of not less than 150 psi and tested at a pressure of not less than 300 psi.
   2. Valves shall be capable of drip-tight, bidirectional shutoff.
   3. Valves shall operate in a vertical position.
      a. Operator: Non-rising stem with standard 2 IN wrench nut, open left (counter-clockwise).
         1) Extension stems are not allowed.
   4. Valves shall be approved by the manufacturer for buried service.
   5. Gear cases and shafts shall be totally enclosed type, suitable for buried service.
      a. Reduction gears are not permitted.

D. Materials:
   1. Furnish materials in full compliance with the following requirements:
      a. Valves shall conform to AWWA C509 or AWWA C515.
      b. Wedges: Ductile iron encapsulated with EPDM.

c. Body: Ductile iron with fusion bonded epoxy coating on interior and exterior in accordance with AWWA C550.
d. Valve ends shall be as indicated in the Drawings.

2.2 DOUBLE DISC, PARALLEL SEAT GATE VALVES

A. Buried Gate Valves 16 IN and larger shall be double disc parallel seated gate valves to be installed in the horizontal position only.
1. Horizontal position refers to the position of the traveling gate.

B. Acceptable Manufacturers:
1. Subject to compliance with the Contract Documents, the following manufacturers are acceptable:
a. Clow.
b. Mueller.
c. M&H.
d. Or Approved Equal

C. Design Requirements:
1. Valves shall be designed for a working pressure of not less than 150 psi and tested at a pressure of not less than 300 psi.
2. Valves shall be capable of drip-tight, bidirectional shutoff.
3. Valves shall operate in a horizontal position.
a. Operator: Non-rising stem with standard 2 IN wrench nut, open left (counter-clockwise).
1) Extension stems are not allowed.
4. Valves shall be approved by the manufacturer for buried service.
5. Bypasses shall be provided on double disc gate valves 36 inches and larger.
6. Gear cases and shafts shall be totally enclosed type, suitable for buried service.
a. Provide 4:1 gearing ratio for horizontal installed valves.

D. Materials:
1. Furnish materials in full compliance with the following requirements:
a. Valves shall conform to AWWA C500.
b. Seats in the body shall be replaceable without removing the valve from the pipeline.
c. Discs shall be cast or ductile iron and bronze faced.
d. Discs may be free to revolve 360 degrees.
e. Valve to be furnished with bronze rollers, bronze or stainless steel tracks and bronze scrapers.
f. Body: Ductile iron with fusion bonded epoxy coating on interior and exterior in accordance with NSF-61unless otherwise specified.
g. Valve ends shall be as indicated in the Drawings.

2.3 ECCENTRIC PLUG VALVES

A. Valves 16 IN and larger.

B. Acceptable Manufacturers:
1. Subject to compliance with the Contract Documents, the following manufacturers are acceptable:
a. DeZurik, Inc.
b. Milliken Valve Company, Inc.
c. Val-Matic Valve & Manufacturing Corp.

C. Design Requirements:
1. Valves shall be designed for a working pressure of not less than 150 psi. Valve actuator shall be sized based upon the working pressure.

2. Valves shall be given bidirectional leakage test and low-pressure 5 psi seat test in accordance with the procedures outlined in AWWA C517. Certified copies of the Proof-of-Design test reports documenting that all requirements of AWWA C517 were successfully met shall be furnished to HRSD prior to installation.
3. Valves shall operate in a horizontal position.
   a. Horizontal position refers to the alignment of the rotating shaft on which the plug is affixed.
   b. Operator: Non-rising stem with standard 2 IN wrench nut, open left (counter-clockwise).
      1) Extension stems are not allowed.
      2) Stem shear and coupling pins shall be solid 316 stainless steel.
4. For exposed service applications, plug valve shaft seals shall be externally adjustable and repackable without removing the actuator or bonnet from the valve under pressure. The actuator mounting bracket shall allow access to the packing gland and provide an air gap to visually inspect the packing.
5. For buried service applications, plug valve shaft seals shall be fully enclosed and protected from the surrounding groundwater and soil via full circumferential metal to metal contact between the bonnet and the actuator body or by other means as approved by the Owner.
6. Operator stems and nuts shall be provided with an enclosure that will protect the stem from being bent and provide a base and guide for the riser pipe.
7. All exposed nuts, bolts, springs and washers shall be 316 stainless steel.

D. Materials: Furnish materials in full compliance with the following requirements:
1. Valves shall conform to AWWA C517 and shall have an interior and exterior epoxy coating.
2. Valve body and plugs shall be ASTM A126 Class B cast iron or ASTM A-536 Grade 65-45-12 ductile iron with thickness in accordance with AWWA C-517.
3. Plugs shall be solid one piece with a cylindrical seating surface eccentrically offset from the center of the shaft. Plug facing shall be Buna-N with a minimum hardness (Shore A) of 70 durometer.
4. Seats shall be welded in overlay minimum 1/8 IN thick nickel raised surface of not less than 95% pure nickel. Bearings shall be sintered, permanently lubricated 316 stainless steel.
5. Packing shall be multiple v-type or “U” cup type.
6. Washers at the top and bottom of the plug journal shall be provided to keep grit and debris out of the bearings and packing.
7. Plug valves in the horizontal position shall be installed so that the plug rotates upward as the valve opens.
8. Valves shall be furnished with a standard 2 IN wrench nut and shall open left (counter-clockwise).
9. Valve ends shall be mechanical joint unless otherwise specified.
10. Port area shall be not less than 70% of the pipe area for a given size valve.

2.4 BALL VALVES

A. Acceptable Manufacturers:
1. Subject to compliance with the Contract Documents, the following manufacturers are acceptable:
   a. NIBCO #T5857066-2.

B. Comply with MSS SP-110.

C. Materials:
1. Body: Brass.
2. Stem, stem gland nut: Brass.
3. Ball: Brass, chrome plated.
4. Seats, stuffing box ring, and thrust washer: Reinforced Teflon.
5. Handle: Vinyl coated or zinc- or cadmium-plated steel.

D. Design Requirements:

1. Rated for 600 psi WOG.
2. 100 percent full opening.
3. Handles showing direction of opening.
4. Stuffing boxes capable of being repacked under pressure and adjustable for wear.
5. Stem with reinforced Teflon stuffing box ring and blowout-proof design.
6. Renewable reinforced Teflon seats.
7. Ball design which does not allow media contact with stem.
8. Balancing stop for all applications.
9. Bodies with mounting pad for applications requiring actuators.

2.5 AUTOMATIC AIR RELEASE VALVES {approval on a case by case basis}

A. General:

1. *Automatic air release valves and appurtenances shall be provided and installed at locations shown on the plan and per the details in the Contracts Documents.*

2.6 CORPORATION STOPS FOR AIR VENTS

A. General:

1. The Contractor shall provide corporation stops for manual air vents at all high points in the force main. The corporation outlets shall be field tapped. All field taps shall be verified from the inside of the pipe and a repair kit shall be used to touch up the interior lining of the pipe. A tapping saddle with CC threads shall be provided at every 2-inch tap. Use Teflon tape or approved pipe thread compound on threads of the corporation stops to ensure tight seal. The Contractor shall keep the corporation stops in a closed position, unless air is being removed from the main, until the brass riser pipe and ball valve is installed. Corporation stops shall be opened prior to backfilling. Install air vent assembly in accordance with the Contract Drawings.

B. Acceptable Manufacturers:

1. Mueller 2” Corporation Stop model # H10045N
2. A.Y. McDonald model #731488
3. Cambridge Brass model #301NL-A7F7
4. No other products nor manufacturers are acceptable

C. Air Vent Assembly

1. Parts and installation per the Contract Drawings

PART 3 - EXECUTION

3.1 INSTALLATION

A. Install products in accordance with manufacturer’s instructions.

B. Setting Buried Valves:

1. Locate valves installed in pipe trenches where buried pipe is indicated in the Contract Drawings.
2. Set valves and valve boxes plumb.
3. Place valve boxes directly over valves with top of box being brought to surface of finished grade.
4. Place valve on firm footing in trench to prevent settling.
5. After installation, backfill up to top of box for a minimum distance of 4 FT on each side of box.

C. Installation of Plug Valves:

1. Geogrid support pad (Tensar TX-160) to be installed below stone base and between 12-inch stone (VDOT 21A or 21B) lifts. Refer to detail on Contract *Drawings. {Engineer to include referenced detail}*
2. Valve shall be oriented so the plug rotates 90 degrees to the top of the pipe when open.

3. Closed face of plug valve to installed facing the normal direction of flow in the pipe. Refer to detail on Contract Drawings. *{Engineer to include referenced detail}*

3.2 FIELD QUALITY CONTROL

A. Valve Turn Count Verification and Inspection Procedures

1. Provide notification to HRSD Interceptors 48-hrs prior to the installation of all valves.
2. Contractor must stage valves near the point of installation to allow the construction inspector, a member of Interceptor Operations (if deemed necessary), and the contractor to verify turn counts and to inspect both the interior and exterior of the value during operation.
3. Prior to inspection, contractor must label each valve with the proposed stationing of the installation location.
4. Once a valve is staged at the installation site but prior to installation, valve turn counts must be verified and recorded by the construction inspector. The station labelling must also be confirmed by the construction inspector. No valve shall be installed if deviations in turn counts or station labelling are observed. HRSD, at its discretion, will witness the process.
5. Prior to the installation of a valve, it must be physically inspected by the construction inspector and the contractor during the valve open & close operations to ensure proper operation & seating. Torque measurements of the full operation must also be measured and recorded. Photographs shall be taken in the fully open, partially closed, and fully closed position prior to installation.
6. All documentation, including photographs, torque measurements, actual stationing, and number of turns must be provided to HRSD 48 hours after the valve has been installed.
7. A formal draft valve guide listing verified turn counts and all other required information must be submitted and approved by HRSD prior to the testing of any piping or valve assemblies.
8. Any deviations to these procedures will be cause for the contractor to excavate and potentially replace the valves at Contractor cost.

B. Air Vent Assemblies:

1. Saddles used for corporation stop installations shall be hydrostatically tested at 50 psi for 30 minutes with zero leakage prior to tapping the pipe. Failed tests shall be redone at the Contractor's expense.
2. HRSD Representative shall be present at all saddle tests. Failure to have the HRSD Representative present shall result in retesting at the Contractor's expense.

END OF SECTION

SECTION 02710
CONTAMINATED GROUNDWATER MANAGEMENT

PART 1 - GENERAL

1.1 SUMMARY

A. Section Includes:
   1. Management of contaminated groundwater from construction dewatering activities.

1.2 DEFINITIONS

A. Contaminated Effluent: Effluent from construction dewatering activities that is impacted with contaminants of concern and require special handling in accordance with applicable federal and state regulations.

B. Contaminated Groundwater: Groundwater that is impacted with contaminants of concern and require special handling in accordance with applicable federal and state regulations.

C. Effluent: Groundwater pumped from the ground during construction.

D. EPA: Environmental Protection Agency

E. HRSD: Hampton Roads Sanitation District

F. HRSD Industrial Wastewater Permit: HRSD permit in a form of a Letter of Authorization that allows contaminated groundwater to be discharged into the sanitary sewer system for treatment by HRSD.

G. VDEQ: Virginia Department of Environmental Quality

H. VPDES: Virginia Pollutant Discharge Elimination System

1.3 ACTION SUBMITTALS

A. Contaminated Groundwater Management Plan: Submit a Contaminated Groundwater Management Plan within 30 calendar days of contract award but prior to construction commencement. This plan shall include:
   1. Summary of information regarding the location and nature of known or suspected groundwater contamination from studies provided by the HRSD.
   2. Summary of permits required for the discharge and plan for securing such permits.
   3. Proposed methods and procedures for contaminated groundwater management generated from construction dewatering activities including treatment equipment required.
   4. Sampling, monitoring and reporting requirements and plans.

B. Proposed Protection Measures: Submit informational report, including drawings, indicating the measures proposed for worker protection from contaminated groundwater in accordance to applicable federal and state regulations.

1.4 REQUIRED INFORMATIONAL SUBMITTALS

A. Discharge Permit Submittals: Provide all contaminated groundwater discharge permits, correspondence and submittals related to VPDES permit compliance to include Discharge Monitor Reports (DMRs), and reporting for compliance with HRSD's Industrial Waste Water Permit, if applicable.

1.5 QUALITY ASSURANCE

A. Regulatory Requirements: Review the requirements of all permits issued for contaminated groundwater discharge. Comply with governing EPA regulations in regard to discharging contaminated groundwater before beginning construction.

B. Contaminated Groundwater Management Conference: Conduct a contaminated groundwater discharge conference at project site. Review methods and procedures related to contaminated groundwater management including, but not limited to, the following:
   1. Review and discuss the Contaminated Groundwater Management Plan including duties of contaminated groundwater management coordinator responsible for this task.
   2. Review plan for documenting volume of effluent generated.
   3. Review procedures for encountering and discharging of known or suspect contaminated effluent.

PART 2 - EXECUTION

2.1 GROUNDWATER MANAGEMENT PROTOCOLS

A. Comply with applicable Contract document terms, regulations, approvals, and permit conditions regarding dewatering. Measures to direct discharge to both HRSD and state waters under a VPDES permit shall be explored and implemented as appropriate.

B. Employ best management practices as required by Virginia Erosion and Sediment Control Law including use of control measures, such as sediment basins and dewatering structures, per VDEQ regulations.

C. Monitor dewatering discharge to ensure compliance with regulations and permits. Sample if required by permitting agency and adjust control measures accordingly.

2.2 PLAN IMPLEMENTATION

A. General: Implement approved contaminated groundwater management plan.

B. Training: Train workers, subcontractors, and suppliers on proper contaminated groundwater management procedures, as appropriate for the work.

2.3 PROCEDURE

A. The Contractor shall dewater only the minimum volume of groundwater as necessary to construct the proposed improvement.

B. Apply for and secure all permits required to discharge contaminated groundwater. Contractor shall be the Permittee for all required permits to discharge contaminated groundwater, and will be solely responsible for compliance with all provisions of the applicable permit(s). HRSD or Engineer will periodically monitor compliance. Any upset, as defined by VDEQ or HRSD, shall be reported to HRSD immediately.

C. Dewatering discharge shall be monitored to ensure compliance with regulations and permits. Sample in accordance to EPA and permit requirements and adjust control measures accordingly.

D. Discharge as per regulations and applicable permits.

E. If during construction activities, the Contractor detects a petroleum odor or other evidence of groundwater contamination (e.g. staining, turbidity, etc.) in an area of unknown contamination, then the Contractor shall immediately call the HRSD to report the suspected contaminated groundwater. All work should be temporarily stopped in this area of suspect contamination until additional guidance is provided by HRSD regarding the handling and treatment of such materials.

F. Contractor shall not discharge any contaminated groundwater except as authorized and specified by applicable permits.

2.4 MEASUREMENT AND PAYMENT

A. Information regarding the location and nature of known or suspected groundwater contamination from previous studies is provided to assist the Contractor in calculating the quantity and cost for managing contaminated groundwater during construction dewatering activities. *{Note to Engineer: make a recommendation on whether costs associated with the proper management of contaminated groundwater shall be included in the lump sum bid for this project, covered under an allowance, or included as specific unit price items in Section 01270 - Measurement and Payment}.*

End of Section

SECTION 02761
TELEVISION INSPECTION OF PIPELINES

1.0 GENERAL

1.1 DESCRIPTION

A. Scope

1. The Contractor shall perform internal inspections of the sewer mains and record any defects discovered. The intent of the inspection is to obtain data on the full circumference of the pipeline.

B. Requirements

1. CCTV Inspection. If directed by the Engineer, the Contractor shall inspect the pipeline interior above the flow line using a color closed circuit television camera (CCTV) and document the inspection on a digital recorder.
2. Conveyance. The Contractor may mount the CCTV camera on either a wheeled or tracked crawler or on a specially designed floatation device. The crawler may be either tethered or free roving.
3. Data Management. All inspection videos shall be submitted in MPEG file format (.mpg) and saved on CDs, DVDs, or external hard drives for submittal. Each inspected pipeline segment should have an associated MPEG file. Electronic PDF (.pdf) files of each inspection log and digital photographs (.jpg) files shall accompany the video inspections for each pipeline segment inspected. The nature of the inspections shall be to verify condition of the pipelines and to provide a permanent record of the existing pipeline condition as it relates to pipe dimensions, materials, obstructions, structural defects, connections, and deterioration.

1.2 QUALITY ASSURANCE

A. The Contractor shall have all CCTV operators who are responsible for logging defects into the data collection software successfully trained and certified through National Association of Sewer Service Companies (NASSCO) Pipeline Assessment and Certification Program (PACP).

B. The Contractor shall use CCTV defect logging software that is PACP-certified, which assures that the software can be used to export a database of all inspection and defect details that conform to the NASSCO PACP database standard. The Contractor shall add Owner specific defect codes to the database as required to insure uniform defect identification and naming.

1.3 SUBMITTALS

A. The following submittals shall be provided in accordance with Section “01340 – Submittals”:

1. Submit resumes and project references for the field personnel who will be employed for this project, including the NASSCO PACP Certification number for each operator.
2. See Section 3.8 for reporting submittal requirements.

2.0 PRODUCTS

2.1 TELEVISION CAMERA AND MONITOR

A. The camera(s) shall be operative in 100 percent humidity/submerged conditions. The CCTV camera equipment shall provide a view of the pipe ahead of the equipment and of features to the side and rear of the equipment through turning and rotation of the lens. The camera shall be capable of tilting at right angles along the axis of the pipe while panning the camera lens through a full circle about the circumference of the pipe. The lights on the camera shall also be capable of panning 90-degrees to the axis of the pipe. If the equipment proves to be unsatisfactory, it shall be replaced with adequate equipment. The camera unit shall have sufficient quantities of line and video cable to inspect sewers with access as far apart as 2,500 feet.

B. The television camera, electronic systems and monitor shall provide an image that meets the following specifications:

1. The gray scale shall show equal changes in brightness ranging from black to white with a minimum of five stages.
2. With the monitor control correctly adjusted, the six colors - Yellow, Cyan, Green, Magenta, Red, and Blue, plus Black and White, shall be clearly resolved with the primary colors in order of decreasing luminance. The gray scale shall appear in contrasting shades of gray with no color tint.
3. The picture shall show no convergence or divergence over the whole of the picture. The monitor shall be at least 13 inches diagonally across the picture tube.
4. The live picture on the CCTV monitor shall be capable of registering a minimum of 500 lines horizontal resolution and be a clear, stable image with no interference.

C. Lighting intensity shall be remote controlled and shall be adjusted to minimize reflective glare. Lighting and camera quality shall provide a clear, in-focus picture of the entire inside periphery of the sewers and laterals for all conditions except submergence. Under ideal conditions (no fog in the pipeline) the camera lighting shall allow a clear picture up to five pipe diameter lengths away for the entire periphery of the sewer. The lighting shall provide uniform light free from shadows or hot spots.

D. Camera focal distance shall be remotely adjustable through a range of 6 inches to infinity.

E. The monitor and software shall be able to capture and save screen images of typical pipeline details and all defects. Screen image files shall be named using pipeline segment number and footage and submitted on CDs, DVDs, or external hard drives following paragraph 3.08, this section.

2.2 VIDEO RECORDINGS

A. The video and audio recordings of all inspections shall be made using digital video equipment. The digital recording equipment shall capture pipeline inspection on CD, DVD, or external hard drive, with each segment inspection recorded as an individual movie file (.mpeg, .mpg). The files shall be named according to segment numbering system provided by the Engineer.

B. The audio portion of the composite CCTV video shall be sufficiently free from electrical interference and background noise to provide complete intelligibility of the oral report. Audio shall be recorded by the operating technician on the inspection video as the pipeline is inspected and shall include the pipeline segment identification number, location (address or cross streets) of starting point, inspection direction, length of inspection, flow information, complete descriptions of the pipeline conditions as they are encountered, and other relevant commentary to the inspections. In addition, the audio reports shall include the distance traveled on the specific run, a description of abnormal conditions in the pipeline as they are encountered, explanations for pausing, backing up, or stopping the survey, and the final measured distance. Audio dubbing after the inspection is prohibited.

C. The segments shall be inspected from upstream to downstream, wherever possible. The images recorded on the CCTV video shall be the same images that are required to be displayed on the CCTV monitor. The footage counter shall be zeroed at the beginning of each inspection and at each intermediate access point along the inspection run. The video recorder shall be paused if the camera progress is stopped for a period longer than 30 seconds due to breakdown of the equipment, or any purpose other than analyzing conditions of the pipeline. The operator shall document the delay on the recording when progress resumes.

D. The equipment used for the inspection must provide for simultaneous monitoring of the in-pipeline inspection by the Engineer or Owner.

E. Typed labels shall be attached to the face of each CD, DVD or external hard drive. The typed index labels shall include the following information:

1. Content
2. Contractor name
3. Type of survey
4. Interceptor name and ID number
5. Reaches included (Segment number, stationing)
6. Date of survey
7. Work order number (if applicable)

F. The inspection video shall be delivered on a medium that is not re-recordable. Contractor shall maintain a copy of all inspection documentation (CDs/DVDs, databases, and logs) for the duration of the work and warranty period.

3.0 EXECUTION

3.1 GENERAL

A. The CCTV camera shall be positioned as close to the spring line as possible while maintaining the required equipment stability. If the flow levels are above the spring line, then the vertical position of the camera shall be just above the free water surface.

B. The speed that the camera or survey unit is conveyed through the pipeline while performing general inspections shall be uniform and shall be limited to a maximum of 30-feet per minute. During CCTV inspection, the survey unit shall be slowed, stopped, or backed-up to perform detailed inspections of significant features. The camera shall be stopped at all defects, changes in material, water level, size, side connections, junctions, or other unusual areas. When stopped at the defect or feature, the operator shall pan the camera to the area and along the circumference of the pipe. The operator shall also record audio of the type of defect or feature, clock position, footage, extent, or other pertinent data. Still photographs or screen captures shall be taken at all defects and general line condition photographs should be taken at least every 200 feet.

C. During period of camera advancement along the reach, the operator should pan to view the flow line conditions along both sides of the pipe and the crown at regular intervals. This may be done while the camera is moving forward if the recorded picture quality is not adversely affected. When viewing the flow line area, the camera should be returned to the forward position providing a full view of the pipe before panning to view the opposite side of the pipeline or the crown conditions.

D. At the Contractor's discretion or direction of the Engineer, the camera shall be stopped or backed up (when conditions allow) to view and analyze conditions that appear to be unusual or uncommon for a sound pipeline. The lens and lighting shall be readjusted, if need be, to ensure a clear, distinct, and properly lighted feature. The video recorder shall be paused if the camera progress is stopped for a period longer than 30 seconds due to breakdown of the equipment, or any purpose other than analyzing conditions of the sewer. The operator shall document the delay on the recording when progress resumes.

3.2 LINEAR MEASUREMENT

A. The Contractor shall measure the camera progress along the full length of each segment. The length counter shall be zeroed at the beginning of each inspection, and at any intermediate access points. In the case of resuming an inspection at an intermediate point along the pipeline, the length counter shall start at the last point recorded. The Contractor shall ensure that the counter starts to register immediately when camera progress starts. Markings on the cable are not acceptable.

B. Prior to commencing inspections, the Contractor shall demonstrate compliance with the linear measurement tolerance specified below:

1. The equipment shall measure the location of the survey unit in 1-foot increments from the beginning of each continuous section. This footage location must be displayed on the CCTV monitor and recorded.
2. The accuracy of the measured location shall be within +0.5% of the actual length of the pipeline segment being surveyed, or 1 foot, whichever is greater.

3.3 CCTV MONITOR DISPLAY

A. The images displayed on the CCTV monitors shall be a view of the pipe above the water surface as seen by the CCTV camera as the unit is conveyed through the pipeline.

B. The camera lighting shall be fixed in intensity prior to commencing the survey and the white balance set to the color temperature emitted. To ensure color constancy, ideally no variation in illumination shall take place during the survey.

3.4 DATA DISPLAYS

A. The CCTV images shall include an initial data display that identifies the sewer reach being surveyed and a survey status display that provides continuously updated information on the location of the survey unit as the survey is being performed. These data displays shall be in alphanumeric form. The size and position of the data shall not interfere with the main subject of the monitor picture.

B. The on-screen text display should be white during inspections where the background behind the display is dark and, conversely, black where the background is light.

C. At the beginning of each pipeline segment being inspected, the following information shall be electronically generated and displayed on the CCTV monitors as well as included in the audio track:

1. Date of survey
2. Interceptor name/identification number
3. Segment identification number or stationing
4. Direction of survey (upstream or downstream)
5. Time of start of survey

D. During inspections, the following information shall be electronically generated, automatically updated, and displayed on the CCTV monitors:

1. Survey unit location in the pipeline in feet and tenths of feet from adjusted zero.
2. Pipeline diameter.

3.5 PHOTOGRAPHS

A. During CCTV inspections, screen captures shall be taken from the monitor images and saved electronically of typical conditions every 200 feet and at all defects. The screen capture shall have the interceptor name, segment identification number, survey direction, footage, and date when photograph was taken. The annotation shall be clearly visible and in contrast to its background, shall have a figure size no greater than 1/4-inch, and shall be type-printed. The annotation shall be positioned on the front of the photograph to not interfere with the subject of the photograph. Files shall be named using the segment identification numbers.

B. The image of the pipeline interior shall fill the photographic image. Photographs must clearly and accurately show what is displayed on the monitor, which shall be in proper adjustment. Where significant features exist within 6-feet of each other, one photograph shall be made to record these features. Where there is a continuous feature, photographs shall not be taken at intervals of less than 6-feet unless necessary to show a change in the feature.

C. The images shall be kept electronically, copied to a CD, DVD, or external hard drive, and submitted with the inspection videos and logs per paragraph 3.8 in this section.

3.6 PIPELINE IDENTIFICATION, INSPECTION FORMS AND DEFECT CODES

A. The Contractor shall use the Owner's pipeline identification numbering system and the segment identification system when performing the inspections for this project, as provided by the Engineer. CCTV inspection defect codes shall conform to those specified in the NASSCO PACP specification.

3.7 PRE-CLEANING INSPECTIONS

A. If the survey unit cannot pass the entire pipeline segment from its starting direction, the reach shall be inspected as much as possible, and the Contractor shall notify the Engineer immediately of the failure to complete and why inspection could not be completed. The Engineer and HRSD will determine if the Contractor shall proceed with cleaning of the pipeline as specified. The Engineer may also decide to clean the line prior to proceeding with inspection. The Contractor shall be prepared to clean all lines, at the Engineer's discretion, before, during or after inspection.

B. If any Contractor equipment becomes stuck in the pipeline, the Contractor shall be responsible for all costs associated with extracting the equipment from the main.

C. Any damages to public or private property resulting from Contractor activities shall be repaired by the Contractor at no cost to the Owner.

3.8 REPORT

A. Two copies of the inspection videos for each pipeline segment saved in mpeg format on CDs, DVDs, or external hard drives; electronic version (.jpg) of still photographs saved on CDs, DVDs, or external hard drives; a digital Microsoft Access database conforming to the NASSCO PACP database standard populated with all inspection and defect information; and hard copies and electronic PDF files of the inspection logs shall be submitted to the Engineer for review and approval. DVDs or sections thereof that do not conform to the specifications shall be re-recorded in the field at the Contractor's expense. Original DVDs and re-recorded runs shall be edited to provide a record with all inspections in sequential order from upstream to downstream. DVDs not in sequential order are unacceptable.

B. The inspection report shall include video recordings, pictures and any Owner required inspection forms and defect codes. Contractor shall provide equal documentation on both the videos and forms. Contractor shall maintain a copy of all report material. The Contractor shall provide comments as necessary to fully describe the existing condition of the pipeline, both through the voice over on the videos and on the inspection forms. Photographs shall further document both typical pipeline features, and defects.

C. Payment will not be made for any work until the Engineer has received, reviewed and approved up to date copies of all report documentation items specified in this paragraph 3.8. The Contractor shall submit these report documentation items a minimum of 10 business days in advance of any payment request to provide the Engineer ample time to review the files.

END OF SECTION

SECTION 02773
ULTRASONIC PIPELINE INSPECTION

1.0 GENERAL

1.1 DESCRIPTION

A. Scope

1. The Contractor shall perform external inspections of the project cast iron pipe (CIP) and ductile iron pipe (DIP) pressure mains and record the estimated pipe wall thickness using ultrasonic technologies. The pressure mains will remain in service during the ultrasonic inspection. The intent of the inspection is to obtain data of sufficient quality and quantity to identify areas of pipe wall material loss due to internal corrosion, particularly at high points of the pipeline. Ultrasonic thickness testing shall be completed at locations identified in the contract documents.

B. Requirements

1. The Contractor shall prepare the exterior of the pipeline for inspection including any pipe cleaning and surface grinding to provide a good contact surface for the ultrasonic probe.
2. Calibrate the ultrasonic testing (UST) equipment using a section of pipe similar to the test pipe in terms of material and original wall thickness. The UST equipment shall be calibrated to match the measured wall thickness of the sample.
3. The Contractor shall conduct an external inspection of the identified project ferrous pipe main sites using ultrasonic testing equipment and shall document the site of each test and the measured wall thickness at each site. A minimum of six locations around the circumference of the pipe shall be tested at each test site. These shall include a minimum of three locations at the pipe crown at the 1:00, 12:00 and 11:00 positions, one at each side of the pipe at the spring line and one in the lower half of the pipe circumference depending on ease of access.
4. Prepare a report for submittal to the Engineer which documents the testing conducted on the pipe at each site, with test results referenced to each site and at each test location. The documentation will present the test results of the UST including an evaluation of the data from each test and an assessment of the thickness of the pipe wall at each location around the pipe circumference. The draft reports should be prepared monthly.
5. The Contractor shall also provide daily field reports to the Engineer.

1.2 QUALITY ASSURANCE

A. Consider incorporating the following in Section "00200 - Instruction to Bidders" Article 4:

1. *Contractor's Qualifications: The Contractor shall have a minimum of five years of experience in such work necessary to successfully meet this specification and provide references for five ferrous pipe inspection projects involving the ultrasonic testing (UST) equipment to be used on this project.*
2. *Supervisor's Qualifications: The Contractor shall assign a qualified field inspection team with a supervisor having a minimum of three years of experience in such work necessary to successfully meet this specification and provide references for three ferrous pipe inspection projects involving the UST equipment to be used on this project.*

B. Equipment Calibration:

1. The Contractor must calibrate the UST equipment to work on the type of pipe to be inspected in this project. The Contractor must submit a plan for calibrating the equipment on site prior to beginning the first inspection. Alternatively, the Contractor must provide documentation that the equipment to be used has been calibrated on identical pipe. The documentation should confirm that the equipment operator during the calibration is the same operator on the project work.

1.3 SUBMITTALS

A. The following submittals shall be provided in the proposal:

1. Submit with bid resumes and project references a list of five similar projects within the past 5 years that required UST inspection.
2. Submit with bid resumes and project references for the field personnel who will be employed for this project.
3. Submit an example of previous work for approval. The example shall consist of one hard copy, CD or DVD of previous pipeline inspection work complete with inspection results, evaluation, and conclusions. The submitted example shall be the work of the field supervisor or foreman to be used on this project and shall be for ferrous mains. Contractor shall be responsible for modifications to equipment and/or inspection procedures to achieve report material of acceptable quality.
4. Submit a work plan for calibrating the UST equipment prior to starting the inspection work. Alternatively, submit evidence of recent calibration of the UST equipment on the same type of pipe as for this project.

2.0 PRODUCTS

2.1 ULTRASONIC TESTING EQUIPMENT

A. The ultrasonic testing (UST) equipment shall be capable of measuring wall thickness in both cast iron and ductile iron pipe from *{Engineer to specify range}* in diameter, the range of sizes expected for this project.

3.0 EXECUTION

3.1 GENERAL

A. The Contractor will be responsible for the following:

1. Preparing access to the pipeline for the inspection including all excavation to expose the pipeline at the indicated test sites.
2. Provision of ventilation of the access pits for the duration of the inspection if needed.
3. Traffic control if needed.
4. At the conclusion of the inspection, backfilling of any excavation and restoration of the site.

3.2 ULTRASONIC TESTING

A. The Contractor shall conduct an ultrasonic survey of the project ferrous pipe segments identified in the contract documents and evaluate the ultrasonic data obtained to estimate the wall thickness at each location on the pipe circumference at each test site.

B. The field notes from the ultrasonic survey shall clearly identify each test location around the pipe perimeter and the measured wall thickness at each test location. Copies of the original field notes shall be provided as part of the documentation. The field notes shall include date and time, weather conditions, names of the inspection team members, and the identification of the inspection site. The notes shall include the identification number of the pipe segment being inspected as provided by the Owner or Engineer.

3.3 PREPARATION

A. The Contractor shall undertake all measures needed to prepare the ferrous pipelines for inspection using the Contractor's equipment. This shall include any additional cleaning of the pipe exterior and any smoothing of the pipe wall as required to obtain an accurate measurement.

3.4 PIPELINE IDENTIFICATION

A. The Contractor shall use the Owner's pipeline identification numbering system and the segment identification system when performing the inspections for this project, as provided by the Engineer.

3.5 INSPECTION REPORT

A. The Contractor shall provide an Inspection Report to the Engineer which will include the following at a minimum:

1. Identification of the test site by street address, intersection, or easement. The report shall provide the pipe segment identification numbers assigned by the Engineer and the Owner as well as the date of the inspection and any other pertinent information.
2. A description and documentation of the calibration of the ultrasonic equipment used for this inspection.
3. A description of the inspections performed including the location along the pipe perimeter of each ultrasonic inspection and the resulting wall thickness measurements. This data should be presented in tabular form.

B. Five hard copies and one electronic copy of the Inspection Report shall be delivered to the Engineer within 14 calendar days of completing all inspections or testing on each pipeline segment.

C. Within 10 business days of receipt of any comments from the Engineer, the Contractor shall incorporate any comments and submit 5 hard copies *{Engineer to verify the need for paper copies}* and 2 electronic copies of the Final Inspection Report to the Engineer.

END OF SECTION

SECTION 02774
CONDITION ASSESSMENT DATA COLLECTION FOR PIPELINES BEING REPAIRED OR TO BE ABANDONED

1.0 GENERAL

1.1 DESCRIPTION

A. Scope:

1. Where a pipeline is being repaired or is being prepared for abandonment, HRSD wishes to collect condition assessment data on the pipeline while it is out of service. This section specifies the procedures for collecting condition assessment data on pipelines being repaired or to be abandoned. This section pertains to both pressure mains and gravity sewer mains. This section does not cover the work involved in the repair work or in the actual abandonment of the pipeline.

B. Requirements:

1. The condition assessment data may be taken from all types of pipes including ductile iron pipe, cast iron pipe, asbestos cement pipe, reinforced concrete pipe, prestressed concrete cylinder pipe and possibly high-density polyethylene pipe or polyvinyl chloride pipe.
2. The condition data shall be formatted to fit HRSD data management requirements and provided to HRSD for review prior to the commencement of the abandonment procedures or repairs.

2.0 MATERIALS

2.1 EQUIPMENT

A. General:

1. All equipment specified in this section shall be in good working condition and manufactured or fabricated to withstand the severity of the work covered under this section.

B. Closed Circuit Television (CCTV) *{if applicable}*

1. CCTV equipment shall meet the minimum requirements specified in Section "02761 – Television Inspection of Pipelines" for CCTV Inspection. This includes the camera and lighting equipment, conveyance system and video recording equipment.

C. Ultrasonic Ferrous Pipe Wall Thickness Testing Equipment *{if applicable}*

1. Ultrasonic wall thickness testing equipment (UST) for ferrous material pipe shall meet the minimum requirements specified Section "02773 – Ultrasonic Pipeline Inspection".

3.0 EXECUTION

3.1 GENERAL

A. The Contractor shall collect data on the physical condition of HRSD pipelines as and where directed by the Engineer.

3.2 PIPELINE CONDITION INSPECTION

A. Contractor shall be responsible for obtaining coupons or sections from the pipelines being repaired or to be abandoned, assessing the condition of the coupon and recording critical information. Wherever possible and appropriate, the Contractor shall use coupons taken from line stop operations, bypassing operations or from any other operations where material is removed from the pipe wall as part of the work. Where this is not possible, the Contractor shall take coupons or sample sections from the pipeline where directed by the Engineer.

B. For each site of repair work or from each pipeline to be abandoned, the Contractor shall record the following information:

1. General Data Each Site, All Pipelines
   a. Line identification number (HRSD assigned facility ID Number)
   b. Street or other location identification.
   c. Pipe material
   d. Where appropriate and available, record pipe class.
   e. Pipeline inner diameter.
   f. Presence and type of external coating or wrap
   g. Presence and type of interior liner, coating
   h. If a repair of a failure, record description of apparent cause of failure
   i. Photograph of inspection site and if a repair, photograph of failure section

2. Coupon Data
   a. GPS coordinates of coupon location to 0.1-foot accuracy. The vertical datum must include the pipe crown elevation at the site of the coupon, regardless of where the coupon was taken from the pipe wall.
   b. The clock position of the center of the coupon or section taken from the pipe. The clock reference should be when looking downstream.
   c. The flow direction shall be painted on the coupon prior to cutting.
   d. Coupon thickness, taken at a minimum of 3 locations
   e. General condition of coupon especially interior wall. Note presence and extent of corrosion, pitting or tuberculation.
   f. Take photographs of the coupon, including one photograph of the exterior of the coupon, one of the interior and one close-up of the coupon on edge. The Unique Coupon #, as assigned by the Engineer, clock position of coupon, and the flow direction shall be clearly denoted in every photo.
   g. All documentation, photos and videos shall bear the Coupon Tag number in the title. This number is a combination of the date the coupon was retrieved, the HRSD asset ID number and the Unique Coupon #.

3. For All Pipelines
   a. When directed by the Engineer in the plans, insert CCTV equipment and conduct a visual inspection of the pipeline and record the inspection electronically. The CCTV inspection should extend as far as is practicable for the equipment.
   b. Where access is feasible, conduct a visual inspection of the open ends of the pipeline and record observations of interior conditions. Note instances of corrosion or wall loss, pitting or tuberculation on the pipe interior.

4. For Ferrous Pipelines *{if applicable}*
   a. Where access to interior of the pipeline is feasible, take wall thickness measurements around the exposed pipe ends in at least the four quadrants (crown, invert and both springlines).
   b. Where access to the interior of the ferrous pipeline is not feasible, conduct external wall thickness testing using ultrasonic testing (UST) equipment as specified in Section "02773 – Ultrasonic Pipeline Inspection". UST wall thickness tests should be conducted at as many locations around

the pipe perimeter as time permits with a minimum of at least three locations at the pipe crown, and once at each of the springline locations.

5. For Asbestos Cement Pipelines *{if applicable}*
   a. Visually inspect the condition of interior wall of the pipe and note areas of softness and depth of soft material.
   b. The coupon/sample shall be contained in accordance with appropriate asbestos handling procedures and delivered as requested by OWNER for further testing.

6. For Reinforced Concrete Pipe *{if applicable}*
   a. Visually inspect the condition of interior wall of the pipe and note areas of softness and depth of soft material.
   b. The coupon/sample thickness dimensions should include the thickness of the concrete material over the reinforcing steel on both the interior and exterior sides of the steel reinforcing.

7. For Prestressed Concrete Cylinder Pipe *{if applicable}*
   a. Visually inspect the condition of interior wall of the pipe and note areas of softness and depth of soft material.
   b. The coupon/sample thickness dimensions should include the thickness of each layer of the composite pipe including the interior mortar layer, the steel cylinder thickness, the mortar layer between the steel cylinder and the prestressing wires (for embedded PCCP only) and the exterior concrete layer. Where there is not cementitious layer between the cylinder and wire, record as a lined cylinder PCCP.

8. For All Plastic Pipe *{if applicable}*
   a. Where plastic pipelines (HDPE, PVC or GRP) are being repaired or abandoned, only coupons or sample wall sections will be needed as indicated above. No additional internal inspection tests will be required.

3.3 DATA MANAGEMENT

A. All documentation, photos, and videos shall be turned over to the Engineer. When requested, coupons shall be turned over to HRSD upon direction by the Engineer, and the Contractor shall coordinate with Engineer on how to affix the Coupon Tag number prior to delivery.

END OF SECTION

SECTION 03700
CONCRETE REBUILD

PART 1 - GENERAL

1.1 SUMMARY

A. Section includes:
   1. Removal of unsound and, as necessary, sound concrete and surface preparation, including full-depth, partial-depth, and shallow-depth concrete rebuilds.
   2. Surface preparation of reinforcing steel and installation of supplemental reinforcement.
   3. Installation of adhesive-grouted dowels.
   4. Cast-in-place concrete for rebuild applications, including but not limited to formwork; proprietary rebuild materials; batching, mixing, and placement procedures; finishing; and curing.
   5. Rebuild Materials and Placement Procedures:
      a. Full depth rebuilds cast-in-place from top surface.
      b. Formed-and-poured partial depth concrete rebuilds on horizontal, vertical and overhead surfaces.
      c. Dry packed vertical and overhead partial depth rebuilds.
      d. Trowel-applied shallow-depth rebuilds at vertical and overhead surfaces.
      e. Core hole rebuilds.

1.2 RELATED SECTIONS

A. Following Work items are related to Work in this Specification, but are specified in other Specifications:
   1. Section 03800: Embedded Galvanic Anodes for Concrete Rebuilds *{Engineer to verify applicability}*
   2. Section 07900: Joint Sealant and Expansion Joint Systems *{Engineer to verify applicability}*

B. This section does not include all requirements related to shoring that may be necessary prior to performing concrete demolition and rebuild. The ENGINEER should review the proposed rebuild location and structure to determine the structural impact of any concrete demolition and repair and provide additional shoring requirements, if necessary.

1.3 DEFINITIONS

A. Abrasive – Any hard, strong substance, such as rocks, sand, water, or minerals, that will cut, scour, pit, erode, or polish another substance.

B. Adhesion – The bonding of two surfaces through internal effects such as molecular (valence) forces or interlocking action, or both.

C. Admixture – A material other than water, aggregates, hydraulic cement, or fiber reinforcement, added to concrete, mortar, or grout, during batching or mixing to enhance plastic or hardened material properties, or both.

D. Aggregate – Granular materials, such as sand, gravel, and crushed stone, commonly used in concrete, mortar, or grout.

E. Bond – Adhesion and grip of a material to other surfaces against which it is placed.

F. Cathodic Protection – A form of corrosion protection for reinforced concrete wherein a sacrificial metal is caused to corrode in preference to the reinforcement, thereby protecting the reinforcement from corrosion.

G. Cofferdam – A temporary structure enclosing all or part on a construction area so that construction or repair can proceed in the dry.

H. Cohesion - The state in which the constituents of a mass of material are held together by chemical and physical forces.

I. Consolidation – The process whereby the volume of freshly placed mortar or concrete is reduced to the minimum practical space, usually by vibration, rodding, tamping, or some combination of these actions.

J. Corrosion – Degradation of concrete or steel reinforcement caused by electrochemical or chemical attack.

K. Cure – The process by which a compound attains its intended performance properties by means of evaporation, chemical reaction, heat, radiation, or combinations thereof.

L. Degradation – A detrimental change in the physical and/or chemical properties of a material.

M. Delamination – A separation along a plane parallel to a surface.

N. Deterioration – Physical manifestation of failure of a material (e.g., cracking, delamination, flaking, pitting, scaling, spalling, staining) caused by service conditions or internal autogenous influences.

O. Erosion – Progressive disintegration of a solid by the abrasive or cavitation action of gases, fluids or solids in motion.

P. Form – A temporary structure, or mold, to support a material while it is curing and gaining sufficient strength to be self-supporting.

Q. Grout – A mixture of cementitious material and water, with or without aggregate, proportioned to produce a pourable consistency without segregation of the constituents.

R. Keyway – A recess or groove in a concrete substrate which is filled with material to provide increased shear strength along the interface.

S. Proprietary – Made and marketed by one having the exclusive right to manufacture and distribute.

T. Reinforcement – Bars, wires, strands, fibers, or other slender members which are embedded in concrete primarily to improve tensile strength.

U. Reinforcement Continuity – A condition in reinforced concrete in which the reinforcing steel is sufficiently interconnected to provide a path for electrical current.

V. Sacrificial Anodes – Chemically active metals such as zinc, aluminum, and magnesium which, when electrically connected to the reinforcing bar, will provide the energy needed to cathodically protect the reinforcing bar.

W. Saturated Surface-Dry – Condition of an aggregate particle or other porous solid when the permeable voids are filled with water and no water is on the exposed surfaces.

X. Segregation – The differential concentration of the components of mixed concrete, aggregate, or the like, resulting in nonuniform proportions in the mass.

Y. Shrinkage – A decrease in one or more dimensions of an object or material.

Z. Slump – A measure of consistency of freshly mixed concrete.

1.4 REFERENCE STANDARDS

A. Reference Standards: Latest edition.
   1. American Concrete Institute (ACI):
      a. ACI 117: Specification for Tolerances for Concrete Construction and Materials and Commentary
      b. ACI 207.1R: Guide to Mass Concrete
      c. ACI 222R: Protection of Metals in Concrete Against Corrosion

d. ACI 301: Specifications for Concrete Construction
e. ACI 305R: Guide to Hot Weather Concreting
f. ACI 306R: Guide to Cold Weather Concreting
g. ACI 309: Guide for Consolidation of Concrete
h. ACI 315: Guide to Presenting Reinforcing Steel Design Details
i. ACI 318: Building Code Requirements for Structural Concrete and Commentary
j. ACI 347: Guide to Formwork for Concrete
k. ACI 355.4: Qualification of Post-Installed Adhesive Anchors in Concrete and Commentary

2. ASTM International (ASTM):
   a. ASTM A276: Standard Specification for Stainless Steel Bars and Shapes
   b. ASTM A615: Standard Specification for Deformed and Plain Carbon-Steel Bars for Concrete Reinforcement
   c. ASTM A706: Standard Specification for Deformed and Plain Low-Alloy Steel Bars for Concrete Reinforcement
   d. ASTM C31: Standard Practice for Making and Curing Concrete Test Specimens in the Field
   e. ASTM C33: Standard Specification for Concrete Aggregates
   f. ASTM C39: Standard Test Method for Compressive Strength of Cylindrical Concrete Specimens
   g. ASTM C42: Standard Test Method of Obtaining and Testing Drilled Cores and Sawed Beams of Concrete
   h. ASTM C94: Standard Specification for Ready-Mixed Concrete
   i. ASTM C109: Standard Test Method for Compressive Strength of Hydraulic Cement Mortars (Using 2-in. or 50 mm Cube Specimens)
   j. ASTM C114: Standard Test Methods for Chemical Analysis of Hydraulic Cement
   k. ASTM C138: Standard Test Method for Density (Unit Weight), Yield, and Air Content (Gravimetric) of Concrete
   l. ASTM C143: Standard Test Method for Slump of Hydraulic-Cement Concrete
   m. ASTM C150: Standard Specification for Portland Cement
   n. ASTM C157: Standard Test Method for Length Change of Hardened Hydraulic-Cement Mortar and Concrete
   o. ASTM C171: Standard Specification for Sheet Materials for Curing Concrete
   p. ASTM C172: Standard Practice for Sampling Freshly Mixed Concrete
   q. ASTM C185: Standard Test Method for Air Content of Hydraulic Cement Mortar
   r. ASTM C191: Standard Test Methods for Time of Setting of Hydraulic Cement by Vicat Needle
   s. ASTM C231: Standard Test Method for Air Content of Freshly Mixed Concrete by the Pressure Method
   t. ASTM C260: Standard Specification for Air-Entraining Admixtures for Concrete
   u. ASTM C266: Standard Test Method for Time of Setting of Hydraulic-Cement Paste by Gillmore Needles
   v. ASTM C309: Standard Specification for Liquid Membrane-Forming Compounds for Curing Concrete
   w. ASTM C403: Standard Test Method for Time of Setting of Concrete Mixtures by Penetration Resistance
   x. ASTM C469: Standard Test Method for Static Modulus of Elasticity and Poisson's Ratio of Concrete in Compression
   y. ASTM C494: Standard Specification for Chemical Admixtures for Concrete
   z. ASTM C496: Standard Test Method for Splitting Tensile Strength of Cylindrical Concrete Specimens
   aa. ASTM C618: Standard Specification for Coal Fly Ash and Raw or Calcined Natural Pozzolan for Use in Concrete
   bb. ASTM C856: Standard Practice for Petrographic Examination of Hardened Concrete

cc. ASTM C1012: Standard Test Method for Length Change of Hydraulic-Cement Mortars Exposed to a Sulfate Solution
dd. ASTM C1064: Standard Test Method for Temperature of Freshly Mixed Hydraulic-Cement Concrete
ee. ASTM C1152: Standard Test Method for Acid-Soluble Chloride in Mortar and Concrete
ff. ASTM C1171: Standard Test Method for Quantitatively Measuring the Effect of Thermal Shock and Thermal Cycling on Refractories
gg. ASTM C1202: Standard Test Method for Electrical Indication of Concrete's Ability to Resist Chloride Ion Penetration
hh. ASTM C1218: Standard Test Method for Water Soluble Chloride in Mortar and Concrete
ii. ASTM C1260: Standard Test Method for Potential Alkali Reactivity of Aggregates (Mortar Bar Method)
jj. ASTM C1293: Standard Test Method for Determination of Length Change of Concrete Due to Alkali Silica Reaction
kk. ASTM C1315: Standard Specifications for Liquid Membrane Forming Curing Compounds and Curing and Sealing Compounds.
ll. ASTM C1439: Standard Test Methods for Evaluating Latex and Powder for use in Hydraulic Cement Concrete and Mortar.
mm. ASTM C1524: Standard Test Method for Water Extractable Chloride in Aggregate (Soxhlet Method)
nn. ASTM C1602: Standard Specification For Mixing Water in Hydraulic Cement Concrete
oo. ASTM C1611: Standard Test Method for Slump Flow of Self-Consolidating Concrete
pp. ASTM C1621: Standard Test Method for Passing Ability of Self Consolidating Concrete by JRing

3. American Welding Society (AWS):
   a. AWS D1.1/1.1M: Structural Welding Code-Reinforcing Steel (latest edition)
4. Concrete Reinforcing Steel Institute (CRSI):
   a. Manual of Standard Practice
5. ICC Evaluation Service (ICC-ES):
   a. AC308: Acceptance Criteria for Post-Installed Adhesive Anchors in Concrete Elements
6. International Concrete Repair Institute (ICRI):
   a. Technical Guideline No. 310.1R Guide for Surface Preparation for the Repair of Deteriorated Concrete Resulting from Reinforcing Steel Corrosion.
   b. Technical Guideline No. 310.2 Selecting and Specifying Concrete Surface Preparation for Sealers, Coatings, and Polymer Overlays.
7. The Society for Protective Coatings (SSPC):
   a. SSPC Painting Manual, Volume 2, Systems and Specifications.
8. United States Army Corps of Engineers (USACE):
   CRD-C 39: Test Method for Coefficient of Linear Thermal Expansion of Concrete.

1.5 DEFINITIONS

A. Abrasive Blast Cleaning: Surface preparation of substrates by abrasive propelled at high speed.

B. Concrete Rebuild: Repairing or restoring deteriorated, damaged, or otherwise unsound concrete.

C. Corrosion: The oxidation or eating away of a metal or other material by exposure to chemical or electrochemical action.

D. Feather Edging: Reducing the thickness along the edge of a material.

E. Full-Depth Concrete Rebuild: Reinforced concrete repair that encompasses the full section of an existing concrete element.

F. Overlay: A layer of non-structural construction material, such as cementitious mortar, placed over an existing structural element or substrate to improve aesthetics, provide function and/or add protection.

G. Partial-Depth Concrete Rebuild: Reinforced concrete repair that extends past, at least, the first later of reinforcing of an existing concrete element.

H. Quality Assurance Inspector: Certified and/or qualified individual(s) responsible for inspecting and/or testing Work such as conditions, materials, installations, applications, etc. to verify Work is performed in accordance with applicable specifications and requirements.

I. Shallow-Depth Concrete Rebuild: Concrete repair that is less than 2 inches deep with no reinforcing bars exposed.

J. Welding Specialist: A Certified Welding Inspector (CWI) as per the AWS D1.1/D1.1M:(latest edition) .

1.6 SUBMITTALS

A. Pre-Award Submittals: Submitted with Bid
   1. CONTRACTOR and Subcontractor Qualifications
   2. Ready-Mix Concrete Supplier Qualifications
   3. Qualifications for Installer of Adhesive-Grouted Dowels
   4. Intent to Warrant Documentation

B. Pre-Construction Submittals: Submitted prior to performing Work.
   1. Quality Control Plan / Work Plan
      a. To be submitted as part of Quality Control System.
   2. Product Data / Safety Data
      a. List of proposed materials, including aggregates for extension, and additives.
      b. Technical data sheets for each type of manufactured material and product indicated, including but not limited to:
         1) Rebuild materials.
         2) Reinforcing bar mechanical splices.
         3) Reinforcement supports.
         4) Corrosion-inhibiting coating.
         5) Adhesive for grouted dowels.
         6) Curing blanket.
         7) Curing compound.
      c. Safety Data Sheets.
      d. Written verification from proprietary rebuild material manufacturer of aggregate extension requirements.
   3. Shop Drawings:
      a. Steel Reinforcement: Details of fabrication, bending, and placement, prepared in accordance with ACI 315. Include material, grade, bar schedules, stirrup spacing, bent bar diagrams, arrangement, and supports of concrete reinforcement. Include special reinforcement required for openings through concrete structures.
      b. Welding: Description of reinforcing bar weld locations, welding procedure specifications and AWS welder certification when welding is permitted.
      c. Structural Formwork: Detailing of fabrication, assembly, and support of formwork prepared by, or under supervision by a professional engineer licensed in State of Virginia.
   4. Material Manufacturer Written Certification for Proprietary Rebuild Material Indicating:
      a. Lot numbers of materials for Project have been tested and meet or exceed material properties published in product data sheets, including compressive strength, slump during lot testing, and amount of water used during mixing.
      b. CONTRACTOR’s foremen and laborers have been trained in use of rebuild products.

c. Proposed alternate proprietary rebuild materials, include supplemental pre-qualification information and test reports. Include notice if tests indicate concrete or mortar is not in conformance with product data sheets

5. Design Mixes for each Ready-Mix Concrete:
   a. Indicate amount of mix water to be withheld for later addition at Site without adversely affecting hardened concrete.
   b. Indicate dosage range for all admixtures, including retarding, accelerating, and water reducing admixtures that may potentially be added on site or at the batch plant, and the anticipated effects on mix set time, slump retention, and air content.
   c. For proposed alternate mix designs, include supplemental pre-qualification information and test reports.
6. Concrete Placement Plan, including control measures for ensuring SSD prior to placement and limiting effects due to temperature and humidity during placement, finishing, and curing.
7. Batch Tickets for all Ready-Mix Concrete.
8. Weld Procedure Specification (WPS) for Welding Reinforcing Bars:
   a. AWS D1.1/D1.1M:(latest edition); including but not limited to:
      1) If chemical analysis and carbon equivalent of reinforcing bars is not known, use pre-heat temperature of 300 to 500 degrees F and E7018 electrodes.
      2) Minimum preheat, welding process, and filler metal.
         a) If oxyacetylene torch is used to achieve preheat, clean steel surface with grinder or wire brush before welding.
      3) Tension and macroetch test results for welds other than fillet welds, using maximum reinforcing bar size approved by ENGINEER; unless specifically waived by ENGINEER.

C. Closeout Submittals: Submitted upon completion of Work prior to final payment.
   1. Record documentation of Work performed such as:
      a. Red-line Drawings, Specifications and/or Sketches.
      b. Construction Photos.
      c. Quality Assurance Inspection and Quality Control Reports.

D. Executed Warranty(s)

1.7 QUALITY ASSURANCE AND QUALITY CONTROL

A. CONTRACTOR Qualifications:
   1. Experienced with successful installations of specified materials in similar environments and on similar structures in use for minimum of 5 years.
   2. Foremen with minimum of 5 years of experience as foremen on similar projects, who are fluent in English, to be on site at all times during Work. Do not change foremen during course of Project except for reasons beyond control of CONTRACTOR; inform OWNER in advance of any changes.
   3. Foremen and at least 50 percent of laborers shall be trained by material manufacturers in use of specific products to be used.

B. Qualifications for Installer of Adhesive-Grouted Dowels:
   1. ACI-CRSI certified Adhesive Anchor Installer and/or installers who are qualified by the product manufacturer.
   2. Foreman or laborer with minimum 5 years of experience performing similar Work to be on site at all times during Work. Do not change foreman or laborer during course of Project except for reasons beyond control of dowel Installer; inform OWNER in advance of any changes.

C. Ready-Mix Concrete Supplier Qualifications:
   1. ASTM C94; Certification of Production Facilities and Delivery Vehicles by National Ready Mixed Concrete Association.

D. Adhesive for Adhesive-Grouted Dowels:
   1. Provide samples of adhesive to OWNER and/or Quality Assurance Inspector for observation of set and compression testing.
   2. Provide minimum of 3 samples per shift during first 4 shifts of adhesive use on project.
   3. Make samples by placing adhesive in 3/8-inch-diameter test tubes to height of approximately 1 inch so that after trimming cylinder of 3/8-inch diameter and 3/4-inch length can be obtained.

E. Pre-Construction Meeting:
   1. Review requirements for concrete rebuild Work, including but not limited to:
      a. Schedule.
      b. Availability of materials and CONTRACTOR's personnel, equipment, and facilities needed to make progress and avoid delays.
      c. Site use, access, staging, and set-up location limitations, including on-site testing laboratory and sample storage.
      d. Limitations due to OWNER's use of facility.
      e. Procedures for concrete rebuild Work, including but not limited to:
         1) Removal of unsound and sound concrete.
         2) Surface preparation.
         3) Coating of exposed reinforcing steel.
         4) Installation of supplemental reinforcement.
         5) Installation of adhesive-grouted dowels.
         6) Rebuild material placement: including but not limited to formwork; proprietary rebuild materials; batching, mixing, and placement procedures; finishing; and curing.
      f. Approved mockup requirements and procedures.
      g. Testing and inspection requirements.
      h. Site protection measures and protection of adjacent surfaces.
      i. Governing regulations.
   2. CONTRACTOR's site superintendent / foremen. CONTRACTOR's quality control representative, OWNER, ENGINEER, representatives of other trades directly affected by Work and/or other stakeholders shall attend.

F. Pre-Placement Meeting:
   1. Conduct meeting at Project site before concrete placements.
   2. Review requirements for specific concrete rebuild placement, including but not limited to:
      a. Materials and CONTRACTOR's personnel, equipment, and facilities that will be used for placement.
      b. Site use, access, and staging.
      c. Coordination with OWNER's use of facility.
      d. Procedures for concrete rebuild placement, including but not limited to:
         1) Prewetting concrete substrate.
         2) Batching, mixing, and placement procedures.
         3) Finishing.
         4) Curing.
         5) Special procedures related to temperature and humidity during placement, finishing, and curing, and thermal/mass concrete effects.
      e. Testing and inspection requirements.
      f. Site safety and protection measures, including but not limited to protection of adjacent surfaces.
      g. Criteria for formwork stripping and shoring removal.
   3. CONTRACTOR's site superintendent / foremen, ENGINEER, OWNER, Quality Assurance Testing and Inspection Representative(s) and representatives of other trades directly affected by Work shall attend.

G. CONTRACTOR's Quality Control System:

1. CONTRACTOR's quality control system is the means of assurance that construction complies with the requirements of the ENGINEER and/or specification. Controls shall be adequate to cover all construction operations.
2. Establish a quality control system and perform sufficient inspection and tests of all items of Work, including that of subcontractors, to ensure conformance to the specification for materials, workmanship, construction, finish, functional performance, and identification.
3. Maintain records of all inspections and tests performed, instructions received from OWNER, ENGINEER or Quality Assurance Inspector(s), and actions taken as a result of those instructions. These records shall include evidence that the required inspections or tests have been performed (including type and number of inspections or tests, nature of defects, causes for rejection, etc.), proposed or directed remedial action, and corrective action taken. CONTRACTOR shall document inspections and tests as required by this section.
4. Testing and Inspection: Include a comprehensive schedule of Work requiring testing or inspection, including the following:
   a. CONTRACTOR-performed tests and inspections including subcontractor performed tests and inspections. Include required tests and inspections and CONTRACTOR-elected tests and inspections.
   b. OWNER-performed tests and inspections.
5. Materials and fabrication procedures are subject to inspection. Tests in the mill, shop, or field shall be conducted by a qualified Inspection Agency. Such inspections and tests will not relieve CONTRACTOR of responsibility for providing materials and fabrication procedures in compliance with specified requirements.
6. CONTRACTOR shall promptly remove and replace materials or fabricated components that do not comply with the specified requirements.

H. Field Quality Control and Quality Assurance Testing:
1. Quality Assurance Testing Agency: OWNER or CONTRACTOR (at the request of OWNER) will provide qualified third-party Quality Assurance Testing and Inspection to perform inspections and tests and submit reports during Work. Reports will be provided to OWNER and CONTRACTOR.
   a. Quality Assurance Testing and Inspection shall be performed, supervised and/or reviewed by a professional engineer licensed in State of Virginia unless otherwise permitted by OWNER.
2. Sampling of materials shall be in accordance with ASTM C172 and will be performed on grade. Sampling shall generally comply with the following requirements:
   a. When pumping, the rebuild material will be directed to a wheelbarrow or other suitable means for testing agency to acquire sufficient materials for testing and casting all specimens (approximately 2-1/2 cubic feet).
   b. Collect first test sample at beginning of placement, and subsequent samples at frequency noted in Table 1 of this Specification.
   c. Samples from proprietary rebuild material shall be taken from the second batch prepared. If two or more mixers are used, ensure that samples are obtained from mixers in an alternating fashion.
3. Test Sample Set:
   a. Six 3-inch diameter by 6-inch long cylinders, or Six 4-inch diameter by 8-inch long cylinders should the coarse aggregate size exceed 3/4 inches will be made and cured in accordance with ASTM C31. The number of required sets shall be in accordance with the Table 1 of this Specification.
   b. Slump in accordance with ASTM C143.
   c. For Self-Consolidating Concrete: Slump flow in accordance with ASTM C1611.
   d. Air content in accordance with ASTM C231
   e. Concrete and air temperature in accordance with ASTM C1064.
4. Cylinders will be cured under field conditions for 1 day; then transported to testing laboratory and cured for remaining period until testing.

5. For each test sample set, 2 cylinders will be tested in compression at 3 days, 2 cylinders at 7 days and 2 cylinders at 28 days. Compression tests will be performed in accordance with ASTM C39 and shall be an average of 2 samples at a given age. OWNER may adjust required number of sample test sets and/or frequency of testing upon CONTRACTOR request and/or based on schedule and need.
6. For proprietary rebuild materials, CONTRACTOR shall record material bag weights for minimum of 10 percent of planned bags per lot of material. The average bag weight shall be used to determine amount of water to be used, proportional to manufacturer's product data based on the measured bag weight.
7. Test reports for each test sample will include following information:
    a. Specimen number.
    b. Portion of structure represented by material tested.
    c. Date cast.
    d. Date tested.
    e. Slump or slump flow and visual stability index.
    f. Air content.
    g. Concrete and air temperature.
    h. Individual cylinder strength and type of failure.
    i. Rebuild material strength on product data sheet.
    j. Notice if test indicates rebuild material does not conform with following criteria:
        1) Rebuild material strength will be considered satisfactory if average of two 28-day test results meets or exceeds the specified 28-day strength and neither 28-day test results is below 90% of the specified 28-day strength.
        2) Proprietary rebuild materials shall be within 1 inch of the manufacturer's specified slump or slump flow. Rebuild material may be rejected if slump or slump flow not within specified limits or if segregation is visible at leading edge of spread. Manufacturer shall provide slump or slump flow if not reported on typical product data sheet.
    k. Non-Conforming Rebuild Material:
        1) If tests indicate that rebuild material is not in conformance with criteria above, remove and replace non-conforming rebuild material or perform additional testing, acceptable to OWNER and/or ENGINEER, to verify conformance with Specification, at no cost to OWNER.
        2) For Additional CONTRACTOR Performed testing:
            a) Procure core samples in accordance with ASTM C42.
            b) If tests indicate that slump, air entrainment, or other requirements have not been met, examine core samples petrographically, according to ASTM C856, to evaluate hardened concrete characteristics.
            c) If compressive-strength tests do not meet acceptance requirements, procure 3 core samples from each portion of structure represented by unsatisfactory tests, and test in compression. Strength of rebuild material in area represented by core tests is satisfactory if average of 3 compressive strength tests equals or exceeds 85 percent of specified 28-day compressive strength and no compressive-strength test value is less than 75 percent of specified 28-day compressive strength. If strength acceptance criteria are not met, remove and replace non-conforming rebuild material areas at no cost to OWNER.
        3) Perform additional inspection and testing and inspecting, at no cost to OWNER, to determine compliance of replaced or additional Work with specified requirements.
        4) CONTRACTOR is responsible for any schedule delays, costs and related items resulting from non-conforming materials or additional testing of suspected non-conforming materials.
8. Cast additional cylinders to verify rebuild material strength to determine when shoring or formwork may be removed as required. Cast cylinders with final placement of day and field cure adjacent to rebuild location until tested. CONTRACTOR to pay for cost of sampling and testing.

9. CONTRACTOR Responsibilities:
    a. CONTRACTOR shall Coordinate Work schedule to allow inspections and testing.
    b. Provide access to Work in timely manner for inspections and testing.
    c. Record lot numbers, expiration dates, and use dates of materials.
    d. Maintain record of locations and quantities of Work installed.
10. Inspections:
    a. Inspections are to be performed at critical steps throughout the rebuild process. Unless indicated otherwise, a qualified Quality Assurance Inspector and/or ENGINEER shall perform inspections.
    b. CONTRACTOR"s Quality Control representative shall perform initial inspections and correct any items not in conformance with specification prior to requesting inspection. Subsequent inspections will be performed if required by the OWNER and/or ENGINEER.
    c. Do not proceed with Work that may make hold point inspections difficult or impossible to perform until inspection has been completed and deficiencies corrected, unless ENGINEER and/or OWNER waives specific inspection requirements.

1.8 DELIVERY, STORAGE, AND HANDLING

A. Deliver, store, and handle materials according to manufacturer's recommendations and in such manner as to prevent damage to materials and structure.

B. Keep materials dry and do not allow materials to be exposed to moisture during transportation, storage, handling, or installation. Reject and remove from Site new materials which exhibit evidence of moisture during application or which have been exposed to moisture.

C. Deliver materials to Project site in original, unopened containers, labeled with manufacturer's name, product brand name and type, date of manufacture, lot number, and directions for storing and mixing with other components.

D. Store materials in original, undamaged containers in clean, dry, protected location on raised platforms with weather-protective coverings, within temperature range required by manufacturer. Protect stored materials from direct sunlight.

E. Store aggregate stockpile in manner to avoid segregation or contamination with foreign matter. Store away from normal drainage paths and cover with canvas or plastic if necessary to keep dry.

F. If containers become torn or otherwise damaged prior to use, dispose of affected materials.

G. Limit stored materials on structures to safe loading of structure at time materials are stored and to avoid permanent deck deflection.

H. Conspicuously mark unlabeled, damaged, or opened containers or containers with contaminated materials and remove from site as soon as possible.

I. Remove and replace materials that cannot be applied within stated shelf life.

1.9 SAFETY

A. Adhere to requirements herein and applicable requirements within the Contract Documents.

B. The CONTRACTOR shall ensure OWNER and CONTRACTOR personnel are aware of any hazards peculiar to the jobsite.
    1. Identify location(s) of supplied and/or existing first aid stations, eye wash stations and pertinent safety equipment
    2. Provide contact information of responsible personnel and emergency phone numbers.
    3. Obtain contact information for OWNER stakeholders and pertinent OWNER site personnel.
    4. Determine and communicate evacuation routes.

C. Keep all work areas clean and safe.

D. Obey all plant rules and regulations.

E. Barricade and/or establish appropriate labeled boundaries to prevent entry to Work location by individuals who do not have a business need to enter.
   1. Establish appropriate sound and/or material exposure/hazard boundaries *(as required)*.
   2. Hang appropriate hazard labels and/or communicate applicable hazards to appropriate OWNER personnel.
   3. Ensure appropriate contact information is clearly displayed and/or communicated such that individuals may contact responsible personnel to communicate hazards and/or permit access.

F. The CONTRACTOR shall conduct all work covered by this section in accordance with all pertinent OSHA regulations.

1.10 CHANGES IN WORK

A. It shall be the responsibility of the CONTRACTOR to notify OWNER of any conflicts, obstructions, discrepancies, damage, deterioration and similar items at variance with the Contract Document content, specifications, instructions, field conditions, weather, etc. that could jeopardize integrity or performance of coating systems promptly upon discovery by means of a formally submitted Request for Information (RFI).

B. CONTRACTOR shall submit proposed changes relating to Work including but not limited to scope, execution, materials, schedule, etc. to OWNER by means of a formally submitted RFI.

PART 2 - PRODUCTS

2.1 MATERIALS

A. Ready-Mix Concrete Materials:
   1. Prepare design mixes for each type and strength of concrete determined by either laboratory trial mixes or field-test data, according to ACI 301.
   2. Aggregate and Paste Materials:
      a. Source Limitations: Obtain each type or class of cementitious material of same brand from same manufacturer's plant, each aggregate from single source.
      b. Cement: ASTM C150, Type II or V.
      c. Fly Ash: ASTM C618, Type F. Include 20 to 30 percent by mass of total cementitious materials, as cement replacement, unless otherwise approved.
      d. Aggregates: ASTM C33, including Table 3; from single source with documented record of at least 10 years of satisfactory service using similar aggregates and cementitious materials in similar applications and service conditions.
         1) Coarse Aggregates: Uniformly graded; Maximum size of coarse aggregate per ACI 318 unless noted otherwise; Class 4S.
      e. Water: ASTM C1602; potable; free from substances known to be harmful to Portland cement; and with less than 0.05 percent chloride ions.
      f. Maximum Water-Cementitious Materials Ratio, by weight: 0.45.
   3. Admixtures:
      a. General:
         1) No more than 0.05 percent chloride ions.
         2) Admixture manufacturer shall certify that admixtures meet requirements and are compatible with other concrete mixture components.
         3) Use admixtures according to manufacturer's written instructions.
         4) No chlorides shall be intentionally introduced into concrete mix.
         5) Obtain admixtures from single manufacturer.

b. Air-Entraining Admixture: ASTM C260. Add air-entraining admixture at manufacturer's prescribed rate to result in concrete at point of placement having air content recommended by ACI 318 for moderate exposure, unless otherwise indicated. Use one of following:
   1) Air Mix, Eucon Air 40; Euclid Chemical Company.
   2) Darex AEA ED, Daravair 1000; W. R. Grace & Co.
   3) MasterAir AE 200; BASF Corporation.
   4) Sika Air; Sika Corporation.
   5) Approved Equal
c. Water-Reducing Admixture: ASTM C494, Type A. Products that may be incorporated in the work include, but are not limited to, the following:
   1) Eucon WR 75; Euclid Chemical Company.
   2) WRDA 20; W. R. Grace & Co.
   3) MasterPolyheed 1020; BASF Corporation.
   4) Sikament 686; Sika Corporation.
   5) Approved Equal
d. High-Range Water-Reducing Admixture (Superplasticizer): ASTM C494, Type F or Type G. Products that may be incorporated in the work include, but are not limited to, the following:
   1) Eucon 37; Euclid Chemical Company.
   2) Daracem 19; W. R. Grace & Co.
   3) MasterRheobuild 1000; BASF Corporation.
   4) Sika ViscoCrete 2100; Sika Corporation.
   5) Approved Equal
e. Water-Reducing, Non-Corrosive, Non-Chloride Accelerating Admixture: ASTM C494, Type C or E. The admixture manufacturer must have long-term non-corrosive test data from an independent testing laboratory (of at least 1 year duration) using an acceptable accelerated corrosion test method, such as electrical potential measures. Products that may be incorporated in the work include, but are not limited to, the following:
   1) Eucon AcN 200; Euclid Chemical Company.
   2) PolarSet; W. R. Grace & Co.
   3) MasterSet FP 20; BASF Corporation.
   4) SikaSet NC; Sika Corporation.
   5) Approved Equal
f. Water-Reducing, Retarding Admixture: Products that may be incorporated in the work include, but are not limited to, the following:
   1) Eucon Retarder 75; Euclid Chemical Company.
   2) Daratard 17; W. R. Grace & Co.
   3) MasterSet R 100; BASF Corporation.
   4) Plastiment ES; Sika Corporation.
   5) Approved Equal
g. Anti-Microbial Admixture: For use in H_2S and microbial-induced corrosion environments. Shall has documented performance of 10 (min) applications in service for 5 years (min) with minimal-to-no deterioration in H_2S environments averaging 50ppm (min). Products that may be incorporated in the work include, but are not limited to, the following:
   1) Con^{mic}Shield® HD.
   2) Approved Equal.
h. Crystalline Waterproofing Admixture: Chloride content shall be no greater than 0.1%. Shall be capable of sealing cracks up to 0.4mm. Shall have a minimum 50% reduction in concrete permeability per CRD-C 48. Products that may be incorporated in the work include, but are not limited to, the following:
   1) Xypex Admix C-500/C-500 NF; Xypex Chemical Corporation.
   2) Crystal-X AdMix; ConShield Technologies Inc.
   3) Approved Equal.

i. Hardening Admixture: Products that may be incorporated in the work include, but are not limited to, the following:
   1) Hard-Cem; Kryton International Inc.
   2) Approved Equal.

B. Proprietary Concrete Rebuild Materials:
   1. Shall contain no calcium chloride or added gypsum.
   2. Water-Cementitious Materials Ratio: 0.45 maximum.
   3. Aggregate Materials:
      a. Aggregates: Use the + No. 170 mesh fraction obtained by wet sieving according to ASTM C1171 for the tests specified in the section titled "Methods of Sampling and Testing" of ASTM C33. If aggregate(s) is added to product as an extender, each additional aggregate is to be tested per ASTM C33 requirements. Pea gravel or other coarse aggregate added as an extension shall meet requirements of Table 3, Class 3S. ASTM C1260 test results for the + No. 170 mesh fraction, as well as each additional aggregate shall be reported to OWNER and/or ENGINEER for approval.
      b. Obtained from single source with documented record of at least 10 years of satisfactory service using similar aggregates and cementitious materials in similar applications and service conditions; acceptable to proprietary concrete manufacturer.
      c. Extension of products with aggregate:
         1) Pre-packaged material may only be extended in strict accordance with the manufacturer's guidance.
         2) Obtain written verification of product extension requirements from the manufacturer. Submit written verification to OWNER and ENGINEER for approval.
         3) Aggregate used for extension shall be clean, rounded, 3/8-inch pea gravel, or as approved by product manufacturer. Aggregate shall be thoroughly washed and/or saturated surface dry as recommended by manufacturer. Aggregates for extension shall meet ASTM C33 requirements including deleterious materials as described below.
         4) Maximum aggregate extension shall be in keeping with manufacturer's recommendations. In no case shall total coarse aggregate content exceed 50 percent of the total rebuild product weight including the aggregate extension.

C. Compressive Strength:
   1. Compressive Strength: 4,000 psi (min).

D. Concrete Rebuild Mixes:
   1. General:
      a. For applications exposed to H_2S and microbial-induced corrosion, at least one of the following shall be incorporated into the Work:
         1) Incorporate anti-microbial admixture into the concrete rebuild material.
         2) Utilize surface applied coatings and/or materials designed to protect concrete surfaces from exposure to H_2S.
   2. Full-depth Rebuilds Cast-in-Place from Top Surface:
      a. HRSD Mix 1: Ready-mix concrete with low electrical resistivity (less than 15,000 ohm-cm) for use with galvanic anodes.
         1) Provide required data and mix design for evaluation.
         2) Provide required testing data including electrical resistivity testing data for evaluation.
   3. Formed-and-poured partial-depth concrete rebuilds on horizontal, vertical and overhead surfaces:
      a. HRSD Mix 2: Proprietary silica-fume or polymer-modified concrete or cementitious mortar with 3/8-inch aggregate added, per manufacturer's recommendations, with high electrical resistivity (greater than 15,000 ohm-cm).
         1) Sikacrete 211 SCC Plus; Sika Corporation.

2) Eucocrete; Euclid Chemical Company.
3) SikaTop 111 Plus; Sika Corporation.
4) Approved Equal

4. Trowel-applied (drypacked) vertical and overhead partial and shallow-depth rebuilds with lift thickness not to exceed 1-1/2 inches (vertical) / 1-inch (overhead), unless otherwise specified by manufacturer:
   a. HRSD Mix 3: Proprietary silica-fume- or polymer-modified cementitious, non-sag mortar with high electrical resistivity (greater than 15,000 ohm-cm).
      1) SikaTop 123 Plus; Sika Corporation.
      2) Verticoat Supreme; Euclid Chemical Company.
      3) EucoRepair V100; Euclid Chemical Company.
      4) DuralTop Gel; Euclid Chemical Company.
      5) Approved Equal
5. Horizontal shallow-depth rebuilds:
   a. HRSD Mix 4: Proprietary silica-fume- or polymer-modified cementitious, mortar with low electrical resistivity (less than 15,000 ohm-cm).
      1) Concrete-Top Supreme; Euclid Chemical Company.
      2) Approved Equal
   b. HRSD Mix 5: Proprietary silica-fume- or polymer-modified cementitious, mortar with high electrical resistivity (greater than 15,000 ohm-cm).
      1) Concrete-Top Supreme; Euclid Chemical Company.
      2) Sikacrete 211 SCC Plus; Sika Corporation.
      3) Eucocrete; Euclid Chemical Company.
      4) SikaTop 111 Plus; Sika Corporation.
      5) Approved Equal.
6. Vertical, overhead and horizontal rebuilds with thickness not to exceed 3/8-inch. For waterproofing and resurfacing.
   a. HRSD Mix 6: Proprietary crystalline modified Portland cement waterproofing parge coat.
      1) Krystol Bari-Cote; Kryton International Inc.
      2) Xypex Magamix I; Xypex Chemical Corporation.
      3) Vandex Unimortar ZSL; Euclid Chemical Company.
      4) Approved Equal.
7. Vertical, overhead and horizontal rebuilds with thickness between 3/8-inch and 2-inch. For waterproofing and resurfacing.
   a. HRSD Mix 7: Proprietary crystalline modified Portland cement waterproofing.
      1) Xypex Magamix II; Xypex Chemical Corporation.
      2) Vandex Unimortar ZSL; Euclid Chemical Company.
      3) Approved Equal.
   b. HRSD Mix 8: Proprietary crystalline modified Portland cement waterproofing for surfaces with exposure to H_2S and microbial-induced corrosion.
      1) Xypex Magamix II with Bio-San; Xypex Chemical Corporation.
      2) Approved Equal.
8. Other Materials and Products:
   a. Hydraulic Cement: Rapid-setting crystalline hydraulic cement for plugging and sealing active leaks.
      1) Krystol Plug; Kryton International Inc.
      2) Xypex Patch'N Plug; Xypex Chemical Corporation.
      3) Vandex Plug; Euclid Chemical Company.
      4) Approved Equal.
   b. Reinforcing Bars: Grade of reinforcing bars shall be Grade 60 minimum and based on the original design with sizes to match existing unless otherwise shown in Contract Documents.
      1) Use ASTM A706 reinforcement where reinforcing bars are welded.

c. Reinforcing Bar Mechanical Splices: Mechanical butt splices utilizing lock-shear bolts and internal serrated grip rails within the coupling sleeve capable of developing twice the tensile capacity of reinforcing bars. Use one of the following:
   1) Standard Reinforcement:
      a) Lenton Lock B-Series; Erico International Corporation.
      b) Approved Equal.
   2) Epoxy-Coated Reinforcement:
      a) Lenton Lock B-Series (Epoxy Coated); Erico International Corporation.
      b) Approved Equal.
d. Stainless Steel Wire: For shallow-depth rebuild.
   1) 16 Gauge Stainless Steel Type 316 for shallow depth concrete rebuild.
e. Tie Wire: Wire used to secure reinforcing bars during concrete placement.
   1) Standard (uncoated) Reinforcing: 16 gauge black annealed wire reinforcing.
   2) Epoxy-Coated Reinforcing: 16 gauge PVC coated wire.
f. Corrosion-Inhibiting Coating Materials: Use material specifically intended for reinforcing steel embedded in concrete; use one of following:
   1) Cementitious Coating: Sika Armatec 110 EpoCem; Sika Corporation.
   2) Cementitious Coating: Duralprep A.C.; Euclid Chemical Company.
   3) Epoxy: Sikadur 32 Hi-Mod; Sika Corporation.
   4) Approved Equal.
g. Adhesive-Grouted Dowels:
   1) Dowels:
      a) ASTM A615, Grade 60, uncoated steel bars, cut true to length with ends square and free of burrs.
      b) ASTM A276, Type 316 stainless steel threaded rods.
   2) Adhesive Grout for Dowels: Tested and evaluated for cracked concrete according to ACI 355.4 or ICC-ES AC308; use one of the following
      a) HIT-RE 500 V3 Epoxy Adhesive; Hilti, Inc.
      b) HIT-HY 200 Epoxy Adhesive; Hilti, Inc.
      c) Approved Equal
h. Helical Concrete Anchors for shallow depth rebuild:
   1) 3/8-inch diameter Heli-Tie Helical Wall Ties; Simpson Strong-Tie Company, Inc.
   2) Approved Equal.
i. Helical Concrete Anchors for core hole rebuild:
   1) 1/4-inch diameter Heli-Tie Helical Wall Ties; Simpson Strong-Tie Company, Inc.
   2) Approved Equal.
j. Concrete screws for shallow depth rebuild:
   1) 1/4-inch (min) diameter Stainless Steel Type 316.

9. Forms:
   a. Forms for surfaces exposed to view shall be constructed of a new 1-inch, Plyform Grade B-B EXT-APA Class 1 exterior plywood of concrete-form grade or equal. Plywood may be reused for formed surfaces exposed to view as long as it is in good condition. Plywood may be 3/4-inch or less provided it can maintain position and shape and meet the deflection criteria in ACI 347 during placement of the concrete. Steel forms are acceptable for curved surfaces.
   b. Forms are to provide finish-to-match finish and profile of existing finish of adjacent material.
   c. The use of form release or form oil is not permitted unless approved by OWNER and/or ENGINEER.
10. Curing Materials:
   a. Moisture-Retaining Cover: ASTM C171, white burlap-polyethylene sheet:
      1) Sika UltraCure; Sika Corporation.
      2) Approved Equal.
   b. Water: Potable.

c. Dissipating Membrane-Forming Curing Compound: ASTM C309, Type 1, 1-D, or 2; VOCs less than 2.9 lbs/gal (350 g/L):
   1) Kurez DR VOX; Euclid Chemical Company.
   2) Cure R; L&M Construction Chemicals, Inc.
   3) 1100-Clear; W.R. Meadows, Inc.
   4) Approved Equal.
d. Solvent-Based Membrane-Forming Curing Compound: ASTM C309, Type 1, Class A & B; ASTM C1315, Type 1, Class A; VOCs less than 2.9 lbs/gal (350 g/L):
   1) Super Diamond Clear 350; Euclid Chemical Company.
   2) Approved Equal.

PART 3 - EXECUTION

3.1 PROJECT CONDITIONS

A. Verify existing dimensions and details prior to concrete rebuild Work. Notify OWNER and/or ENGINEER of conditions found to be different than those indicated in the Contract Documents. OWNER and/or ENGINEER will review condition and inform CONTRACTOR of required changes or resolutions.

B. Environmental Limitations: Install materials at temperatures, humidity, and other environmental conditions recommended by material manufacturer.

C. Handle and install materials in strict accordance with safety requirements of material manufacturers, Safety Data sheets, and local, state, federal and regulatory requirements.

D. Maintain adequate ventilation during surface preparation, mixing and placement of materials.

3.2 EXAMINATION

A. Examine substrates and conditions with representatives of proprietary concrete rebuild manufacturers for compliance with requirements and other conditions affecting performance of concrete rebuild Work.

B. Ensure that Work done by other trades is complete and ready to receive concrete rebuild material.

C. Verify that areas and conditions under which concrete rebuild Work is to be performed permit proper and timely completion of concrete rebuild Work.

D. Notify OWNER and/or ENGINEER in writing of conditions which may adversely affect concrete placement or performance. Do not proceed with concrete placement until these conditions have been corrected and reviewed by OWNER and/or ENGINEER.

3.3 PROTECTION

A. Protect adjacent surfaces, equipment, utilities, and surrounding site from staining, damage, or debris from concrete rebuild Work.

B. Restore surfaces and site to condition prior to concrete rebuild Work, to satisfaction of OWNER.

3.4 COORDINATION

A. Coordinate Work to ensure that adjacent areas are not adversely affected. Coordinate with:
   1. OWNER and/or OWNER's designated representative.
   2. Other trades with Work in progress to ensure proper sequencing and satisfactory completed construction.
   3. Other trades to avoid or minimize Work on, or in immediate vicinity of, concrete rebuild Work in progress. Ensure that Work from other operations will not adversely affect quality of completed installation.

3.5 CONCRETE REMOVAL AND SURFACE PREPARATION

A. Prior to Concrete Removal Work:
   1. Develop plan for confining and disposing of broken concrete and other debris from removal Work.
   2. Coordinate with OWNER and remove or temporarily shore existing plumbing, mechanical, and/or electrical lines and associated fixtures that interfere with Work. Reattach removed items at completion of Work.
   3. Install structural shoring as required and/or specified by Contract Documents OWNER and/or ENGINEER.

B. Equipment: Use following or approved equal.
   1. Pneumatic Chipping Hammers:
      a. Nominal 30-lb class or less for removal of concrete at rebuild areas.
      b. Nominal 15-lb class or less for detail work adjacent to and beneath reinforcing steel.
   2. Saws capable of cutting concrete to specified depth.
   3. Abrasive blasting equipment capable of removing and cleaning laitance, dirt, loose pieces of concrete, and surface contaminants from exposed concrete surfaces and rust, concrete, and surface contaminants from exposed steel surfaces.
   4. High-pressure, oil-free compressed air equipment capable of removing dust and dirt from exposed concrete removal areas.

C. Sound concrete surfaces with hammer, chain, reinforcing bar, or similar metal object; and mark areas of unsound concrete.

D. For partial depth rebuild, remove unsound concrete and, as necessary, sound concrete to create minimum removal depth of 1-inch behind all exposed reinforcing bars as shown in Drawing 00-30 *{Engineer to specify}* and Drawing 00-33 *{Engineer to specify}*. Refer to ICRI Technical Guideline No. 310.1R. Reinforcing bars shall be considered exposed if 25 percent of the surface area is visible along any given 1 foot length.
   1. Exercise care to avoid cracking underlying sound concrete, punching through member, or damaging embedments such as utilities or conduit.
   2. Limit chipping hammer size and impact angle to minimize damage to sound concrete. Impact angle shall be no more than 60 degrees to surface.

E. Concrete Removal Geometry:
   1. Slope removal of substrate to avoid abrupt changes in removal thickness.
   2. Where possible, make removal area rectangular in shape in plan (for top- and overhead-surface rebuilds) and elevation (for vertical-surface rebuilds).
   3. Remove concrete at a 45-degree-angle to eliminate re-entrant corners.
   4. Extend concrete removal at least 4-inches beyond edge of unsound concrete.
   5. Create rounded or square edges at removal areas by core-drill or sawcut. Provide 1-inch minimum depth at top surface removal areas. Adjust depth of sawcut to avoid sawing into reinforcing steel, embedded electrical conduits, or other embedments.

F. Notify OWNER and/or ENGINEER of embedded electrical conduit, utilities or similar encountered in removal areas. Proceed as directed by OWNER and/or ENGINEER. Unless otherwise directed, remove abandoned embedded materials in removal area.

G. Inspect and sound concrete surfaces in and around removal areas. Remove additional unsound concrete and concrete contaminated with oil or other materials. Sawcut, or core-drill, and chip removal area perimeter and corners as necessary to provide square configuration. Limit abrupt changes in geometry to prevent re-entrant corners.

H. Abrasive blast clean surfaces of removal area, including vertical edges, to remove surface contaminants, loose pieces of concrete, and concrete that is bruised or micro-fractured and to roughen surfaces. Clean removal area surfaces with dry, oil-free compressed-air jet.

I. Test and record substrate pH using pH indicating papers. pH testing frequency should be performed once every 100 square feet of surface area to be coated.
   1. For dry substrate spray the surface lightly with distilled, de-ionized water from a commercially available spray bottle that has been properly rinsed to preclude any dissolved solids. The spray shall wet the surface to a "shiny" appearance and water shall not run down the wall. Wait 60 seconds to allow chemical equilibria to be established and then test the pH of the water on the surface.
      a. The selected preparation and cleaning method must produce a concrete surface pH of 8.0 to 11.0. If after surface preparation, the surface pH remains below 8.0, perform additional waterblasting, cleaning, or abrasive blast cleaning until additional pH testing indicates an acceptable pH level.

J. Achieve final surface profile of CSP 7 or higher according to ICRI Guideline No. 310.2.

3.6 REINFORCEMENT PREPARATION

A. Leave existing reinforcing in place unless otherwise directed by OWNER and/or ENGINEER.

B. Notify OWNER and/or ENGINEER of reinforcing bars that are incorrectly located or have less than 2 inches of concrete cover; damaged; fractured; or have lost more than 10 percent of their original cross-sectional area at any point. OWNER and/or ENGINEER will determine if remedial action is required.

C. Abrasive blast clean exposed steel surfaces, including but not limited to existing reinforcement and embedments, to SSPC-SP 6/NACE No. 3 (SSPC Painting Manual, Volume 2), Commercial Blast Cleaning, finish, with minimal rust or concrete debris. Clean steel surfaces with dry, oil-free compressed-air jet. Exercise care to clean undersides of reinforcing bars.

D. Prior to placement, reinforcement shall be free of materials deleterious to bond.

E. Place, support, and fasten reinforcement as indicated in Contract Documents and/or by OWNER and/or ENGINEER. Do not exceed tolerances specified in ACI 117.

F. Unless otherwise specified, concrete cover for reinforcement shall conform to Table 2 of this Specification. Concrete cover tolerances shall comply with ACI 117. Position tie ends away from exposed surfaces. Build out concrete rebuild as needed to achieve minimum cover.

G. Unless otherwise permitted, furnish and use templates for placement of column dowels.

H. Field bending or straightening: When permitted, bend, or straighten reinforcing bars embedded in concrete (black steel only). Reinforcing bar sizes No. 3 through 5 may be bent cold the first time, provided bar temperature in above 32°F. For other bar sizes, preheat reinforcing bars before bending.

I. Preheating: Apply heat by methods that do not harm reinforcing bar material or cause damage to concrete. Preheat length of reinforcing bar equal to at least five bar diameters in each direction from center of bend but do not extend preheating below concrete surface. Do not allow temperature of reinforcing bar at concrete interface to exceed 500°F. Preheat temperature of reinforcing bar shall be between 1100 and 1200°F. Maintain preheat temperature until bending or straightening is complete. Unless otherwise permitted, measure preheat temperature by temperature measurement crayons or contact pyrometer. Do not artificially cool heated reinforcing bars until bar temperature is less than 600°F.

J. Field cutting reinforcement: Field cut reinforcement only when specifically permitted using cutting methods specified by or acceptable to OWNER and/or ENGINEER.

K. Reinforcement through expansion joint: Do not continue reinforcement or other embedded metal items through expansion joints, unless permitted and/or specified by OWNER and/or ENGINEER.

L. Apply 2 coats of corrosion-inhibiting material on exposed steel surfaces. Corrosion-inhibiting material not required for embedded steel items that are galvanized or otherwise coated with a corrosion-inhibiting coating. Protect existing galvanized and/or coated embedded items during abrasive blasting.
   1. Batch, mix, and apply material according to recommendations of material supplier.
      a. Minimum dry film thickness: 10 to 12 mils.
   2. Exercise care to coat difficult-to-reach surfaces, such as undersides of reinforcing bars.
   3. Minimize spillage on concrete surfaces. Remove materials that will act as bond breaker by chipping or other means.

M. Provide and install supplemental reinforcement as specified herein or as directed by Contract Documents and/or OWNER and/or ENGINEER.
   1. Where existing reinforcement has lost 10 percent or more of its original cross-sectional area, add supplement bars of same size as existing bars, unless smaller sized bars are approved by OWNER and/or ENGINEER. An engineering analysis may be performed to determine if repairs are needed.
      a. Develop supplement reinforcement by lap splice with existing bars, as shown in Drawing 00-36 and 00-37 *{Engineer to specify}*. If lap splices are not feasible, develop with mechanical reinforcing bar splices, as shown in Drawing 00-38 and 00-39 *{Engineer to specify}*. If mechanical splices are not feasible, notify OWNER and/or ENGINEER and, if approved by OWNER and/or ENGINEER, develop by welding supplement bars to existing bars using approved WPS and as shown in Drawing 00-40, 00-41 and 00-42 *{Engineer to specify}*.
   2. Where existing reinforcement is located 3-inches or more below the concrete surface, or is spaced further apart than 12-inches, add supplemental No. 3 bars in both directions with 2 inches minimum of clear cover to result in maximum spacing between fully exposed bars of 12-inches, as shown in Drawing 00-43 *{Engineer to specify}*.
      a. Secure outer layer of supplemental No. 3 bars with adhesive-grouted stainless steel threaded rods at 12-inches maximum on center, as shown in Drawing 00-43 and 00-44 *{Engineer to specify}*.
   3. Remove additional sound concrete to properly position bars with minimum concrete and full encasement by rebuild material; and to develop supplemental reinforcement beyond areas of deteriorated existing bars. At welded splices, expose full circumference of existing reinforcing bars for at least 3-inches beyond weld.

N. Accurately position, support, and secure reinforcement against displacement. Locate and support reinforcement with bar supports to maintain minimum concrete cover. Do not tack weld crossing reinforcing bars.

O. Do not weld reinforcement unless specifically approved by OWNER and/or ENGINEER.

P. Set wire ties with ends directed into concrete, not toward exposed concrete surfaces.

3.7 EMBEDDED ITEMS

A. Place and secure items to be embedded in concrete rebuild placement including, but not limited to, discrete galvanic anodes.

B. For concrete rebuilds adjacent to existing embed plates, extend rebuild behind edge of embed plate as shown in Drawing 00-45 *{Engineer to specify}*. Clean and coat plate surfaces with corrosion inhibiting material. Do not extend demolition behind embed plate greater than 1-inch without approval of OWNER and/or ENGINEER.

3.8 INSTALLATION OF ADHESIVE-GROUTED STEEL DOWELS

A. Equipment:
   1. Percussive or rotary drilling equipment for making holes in concrete substrate for dowel installation.

B. Dowels:
   1. Install dowels at locations and in sizes specified in Contract Documents or as directed by OWNER and/or ENGINEER.
   2. Dowels to be installed in the adhesive shall be clean, oil-free, and free of loose rust, paint, or other coatings.
   3. Install in concrete removal areas on vertical and overhead surfaces that do not include exposed reinforcing bars, as shown in Contract Documents or as directed by OWNER and/or ENGINEER and shown in Drawing 00-44 *{Engineer to specify}*, to mechanically anchor rebuild material. Install dowels in 12-inch grid pattern.

C. Remove unsound concrete and install dowels in sound concrete.

D. Install dowels in accordance with adhesive manufacturer.

E. Dry drill holes with rotary impact hammer drill or rock drill perpendicular to concrete surface.
   1. Locate existing reinforcement and embedded items with reinforcing bar locator and position holes to avoid existing reinforcement.
   2. Do not damage existing reinforcement.
   3. Make hole diameter at least 1/8-inch larger than dowel diameter, unless otherwise recommended by adhesive manufacturer.

F. Clean holes with stiff brush and dry, oil-free compressed-air jet to remove loose concrete, dust, and debris.

G. Inject adhesive with tube into back of hole and fill hole to front, withdrawing tube.
   1. Unless otherwise indicated by manufacturer, adhesive shall be dispensed through a tube or cartridge extension, beginning at the maximum depth of the hole and withdrawn as adhesive is injected, followed by insertion and rotating the dowel to the specified depth. Where necessary, spaces around anchors at the surface shall be sealed at horizontal to vertical overhead locations to prevent loss of the adhesive during curing.
   2. Carefully proportion and mix 2-part epoxies according to manufacturer's directions. Scrape out entire contents of both containers to assure accurate proportions.
   3. Mix adhesive for approximately 3 minutes with paint stirrer attached to low speed (400 to 600 rpm) electric or pneumatic drill, unless otherwise specified by manufacturer. Move stirrer up and down and around sides of mixing container until even, streak-free color is attained. Do not whip in air.
   4. Install sufficient material to completely fill annular space around dowel.

H. Insert dowel to bottom of hole and secure in center of hole, perpendicular to surface, until adhesive has set. Provide 2-inch minimum clear cover from concrete surface.

I. Promptly remove excess adhesive.

J. Apply 2 coats of corrosion-inhibiting material on exposed steel surfaces. Corrosion inhibiting material not required for embedded steel items that are galvanized or otherwise coated with a corrosion-inhibiting coating.

3.9 SHALLOW DEPTH REBUILD PROCEDURE

A. For rebuilds less than 2-inches deep with no exposed reinforcing steel, perform shallow depth concrete rebuild as shown in Drawing 00-46 and 00-47 *{Engineer to specify}*.

B. Wet substrate thoroughly and then remove standing water.

C. Place shallow-depth rebuild materials by troweling toward edges of rebuild area to force intimate contact with edge surfaces. For large patches, fill edges first and then work toward center, always troweling toward edges of patch.

D. For vertical patching, place material in lifts of not more than 1-1/2 inches or less than 1/4 inch. Do not feather edge.

E. For overhead patching, place material in lifts of not more than 1 inch or less than 1/8-inch. Do not feather edge.

F. Where multiple lifts are used, score surface of lifts to provide a rough surface for application of subsequent lifts. Allow each lift to reach final set before placing subsequent lifts.

G. Allow surfaces of lifts that are to remain exposed to become firm and then finish to a smooth surface with a wood or sponge float.

H. If 25 percent or more of the surface area of the reinforcement is exposed along a 1-foot length, remove concrete to a depth of 1-inch behind reinforcing bar and perform partial depth rebuild.

3.10 CORE HOLE REBUILD PROCEDURE

A. For rebuild at concrete core holes, perform concrete rebuild as shown in Drawing 00-48 and 00-49 *{Engineer to specify}*.

B. Surface preparation:
   1. Depth of core hole shall extend at least 2 inches from surface of concrete.
   2. Surface of core hole shall be cleaned of dust, dirt, oil, or other contaminants that may inhibit proper bonding of rebuild materials.
   3. Cleaning shall be by wire brushing followed by water flushing. Remove all excess water with compressed air free of suspended oils to provide a saturated surface-dry condition.
   4. The wire brushing shall be aggressive enough to roughen the surface of the core hole and provide an open pore structure.

C. Supplemental mechanical anchorage:
   1. Install 2 helical concrete anchors, per anchor manufacturer's recommendations, at each core hole. If core hole is full depth through wall thickness 12-inches or greater, install 4 helical anchors, two from each face.
   2. Drill angled pilot hole through the core hole.
   3. Install anchor with hammer drill.
   4. Recess anchor to a 1/2-inch depth, seal surface penetration with an approved epoxy.

D. Select rebuild material based on depth and orientation of core using concrete rebuild mixes specified herein.

E. Place rebuild material in accordance with specifications herein and material manufacturer's instructions.

3.11 FORMWORK

A. Formwork shall be in accordance with applicable provisions of ACI 347. Forms shall be of wood, metal, structural hardwood or other suitable material that will produce the required surface finish.

B. Construct formwork so final appearance and shape of rebuild material matches adjacent existing concrete, and so concrete members and structures are of size, shape, alignment, elevation, and position indicated, within tolerance limits of ACI 117.
   1. Limit abrupt or gradual concrete surface irregularities to ACI 347 Class C, 1/2-inch.
   2. Provide 3/4-inch chamfer at exterior corners and edges of permanently exposed concrete.
   3. Construct forms tight enough to prevent loss of concrete mortar.

C. Notify OWNER and/or ENGINEER of rebuilds on overhead and vertical surfaces where reinforcement has less than 2 inches of clear cover. Form and build-out rebuild surface to provide 2 inches minimum of clear cover, as shown in Figure 3 *{Engineer to specify}*, unless otherwise directed by OWNER and/or ENGINEER. Chamfer edges of build-out.

D. Fabricate forms for easy removal without hammering or prying against concrete surfaces. Provide crush or wrecking plates where stripping may damage cast-concrete surfaces. Do not allow metal tools to come into contact with concrete surfaces. Kerf wood inserts for forming keyways, reglets, and recesses, for easy removal.

E. Arrange form ties such that metal is at least 2 inch below concrete surfaces exposed to weather. Lugs, cones, washers, and other devices shall not leave depression or hole larger than 2 inches in diameter.

F. Provide top forms for inclined surfaces steeper than 1.5 horizontal to 1 vertical (1.5:1).

G. Do not use form-release oil unless approved by OWNER and/or ENGINEER.

H. Provide temporary openings for cleanouts, air relief holes, and inspection ports as required. Close openings with panels tightly fitted to forms and securely braced to prevent loss of concrete mortar. Locate temporary openings in forms at inconspicuous locations. Rebuild all cored air relief holes as specified herein.

I. Clean forms and adjacent surfaces to receive concrete. Remove chips, wood, sawdust, dirt, and other debris immediately before placing concrete.

J. Retighten forms and bracing before placing concrete to prevent mortar leaks and maintain proper alignment.

K. Removing and Reusing Forms: Formwork, for sides of beams, walls, columns, and similar parts of Work, that does not support weight of concrete, may be removed after cumulatively curing at not less than 50 degree F for 24 hours after placing concrete, provided concrete is hard enough not to be damaged by form-removal operations and provided curing and protection operations are maintained.
   1. Leave formwork for beam soffits, joists, slabs, and other structural elements that supports weight of concrete in place until concrete has achieved at least 75 percent of 28-day design compressive strength.
   2. Clean and repair surfaces of forms to be reused in Work. Do not use split, frayed, delaminated, or otherwise damaged form-facing material, or patched forms, for exposed surfaces.

3.12 MIXING AND PLACEMENT

A. Concrete Mixing:
   1. Ready- Mixed Concrete: Measure, batch, mix, and deliver concrete according to ASTM C94.
      a. Deliver concrete to Site and discharge within 90 minutes or before 300 revolutions of mixer drum, whichever comes first, after introduction of mix water. Concrete that exceeds specified time limit will be rejected without prior approval from OWNER and/or ENGINEER. Alternate mixing or discharge times, may be approved by the OWNER and/or ENGINEER depending on the approved mix design and the environmental conditions during placement.
      b. Temperature: If the measured concrete temperature at delivery is not within the limits specified below or as otherwise specified, a check test will be performed immediately at a new location in the sample. If the check test fails, the concrete is considered to have failed to meet the requirements of this Specification.
      c. Concrete temperature: When the average of the highest and lowest ambient temperature from midnight to midnight is expected to be less than 40°F for more than three successive days, deliver concrete to meet the following minimum temperatures immediately after placement:
         - 55°F for sections less than 12 in. in the least dimension
         - 50°F for sections 12 to 36 in. in the least dimension
         - 45°F for sections 36 to 72 in. in the least dimension
         - 40°F for sections greater than 72 in. in the least dimension

The temperature of concrete as placed shall not exceed these values by more than 20°F. These minimum requirements may be terminated when temperatures above 50°F occur during more than half of any 24-hour duration. Unless otherwise specified or permitted by OWNER and/or ENGINEER, the temperature of concrete as delivered shall not exceed 95°F.

d. Do not add water-reducing or high-range, water-reducing admixture indiscriminately to increase slump.
e. Introduce high-range, water-reducing admixture at Site with additional mixing per manufacturer's recommendations.
f. Reject concrete that arrives at Site with slump exceeding maximum specified slump.

2. Project-Site Mixing: Measure, batch, and mix concrete materials according to manufacturer's written instructions and ASTM C94.
   a. Develop batching and mixing operations so that quality control is assured.
   b. Designate one or two individuals to batch and mix concrete. Fully instruct these individuals on batching and mixing procedures.
   c. Maintain accurate mix proportions. Batch materials by weight on basis of whole bags of proprietary material. Maintain calibrated scale at site during concrete placement operations. Batching by volume is permitted if weight-volume relationship for each material is verified on daily basis, and aggregate moisture content is measured at least once daily and aggregate volume is adjusted for bulking.
   d. Combine and mix ingredients to uniform consistency.
   e. Mix concrete materials in appropriate paddle-type mortar/plaster mixer(s) in lieu of volumetric-type mixer(s), unless otherwise permitted by OWNER and/or ENGINEER.
      1) For mixer capacity of 1 cubic yard or smaller, mix at least 1-1/2 minutes, but not more than 5 minutes after ingredients are in mixer.
      2) For mixer capacity larger than 1 cubic yard, increase mixing time by 15 seconds for each additional 1 cubic yard.
      3) Provide sufficient number of mixers, including reserve mixers, so that concrete placement operations will proceed uninterrupted, and each area is completely cast before material achieves initial set.

B. Concrete and Mortar Placement, General:
   1. Reference Drawing 00-31 *{Engineer to specify}* for typical section showing concrete rebuild placement.
   2. Use bonding procedure recommended by material manufacturer.
      a. If saturated-surface-dry condition is required, soak concrete surface at least 4-hours prior to concrete or mortar placement.
   3. Convey concrete from mixer to place of deposit in manner such that no segregation or loss of materials occurs. If pumping, minimize length of pipeline.
   4. Place concrete continuously until rebuild section is completed, with no cold joints.
      a. Do not allow concrete to disturb or displace reinforcing bars, floor drains, or other embedments.
      b. Dispose of concrete that has partially set prior to placement or that has been contaminated by foreign material.

C. Concrete Placement, Top- and Vertical-Surface Rebuilds:
   1. Place concrete as near as possible to its final position to avoid segregation due to re-handling or flowing.
   2. Avoid or minimize vertical fall. Do not allow concrete to fall vertical distance greater than 4-feet from point of discharge to point of deposit.
   3. Place concrete at rate so that concrete is plastic and flows readily into corners of forms and into spaces around reinforcing bars.
   4. Consolidate concrete in accordance with requirements herein, except for self-consolidating concrete and unless otherwise specified by material manufacturer.

a. Concrete shall be consolidated by mechanical vibrators. The vibrators shall be internal type and shall at all times be adequate in number of units and power of each unit to properly consolidate all concrete as specified in ACI 309. The frequency shall be not less than 8000 cycles per minute when the vibrator is submerged in concrete.
b. The duration of vibration shall be limited to the time necessary to produce satisfactory consolidation without causing objectionable segregation. In consolidating each layer of concrete, the vibrator shall be operated in a near vertical position, be inserted at uniformly spaced locations no farther apart than the visible effectiveness of vibrator and the vibrating head shall be allowed to penetrate under the action of its own weight.
c. Do not use vibrators to transport concrete.
d. If internal vibrators will not fit in formed rebuild void, external vibration of forms is permitted.

D. Concrete Placement, Overhead Rebuilds:
1. Place concrete as near as possible to its final position.
2. Consolidate concrete with metal rod, taking care to fill corners and around reinforcing bars and to avoid segregation.

E. Mortar Placement, Trowel-Applied Rebuilds:
1. Apply mortar firmly with trowel.
2. Place mortar in lifts if recommended by material manufacturer. Where multiple lifts are used, score surface of lift with trowel to roughen surface for application of subsequent lift. Allow lift to reach final set before placing subsequent lift.
3. Allow surfaces to remain exposed to become firm and then finish to smooth surface with wood or sponge float.

F. Cold-Weather Placement:
1. Protect concrete work from physical damage or reduced strength due to frost, freezing, or low temperatures. Comply with ACI 306R and as follows.
a. When air temperature has fallen or is expected to fall below 40 degrees F, uniformly heat water and aggregates before mixing to obtain concrete mixture temperature of not less than 50 degrees F and not more than 80 degrees F at point of placement. Mix water and aggregates together before adding cement. Do not add cement if temperature of water/aggregate mixture exceeds 70 degrees F.
b. Do not use frozen materials or materials containing ice or snow.
c. Do not use calcium chloride, salt, or other materials containing antifreeze agents or chemical accelerators, unless otherwise specified and approved in mix design.

G. High Evaporation Conditions:
1. When high evaporative conditions necessitate protection of concrete immediately after placing or finishing, make provisions in advance of concrete placement for windbreaks, shading, fogging, sprinkling, ponding, or wet covering.

H. Hot-Weather Placement
1. Protect concrete work from physical damage or reduced strength due to rapid evaporation or overheating of concrete. Refer to ACI 305R for hot-weather conditions that may adversely affect concrete placement, finishing, and curing. Do not allow temperature of concrete at time of placement to exceed 95 degrees F. When hot-weather conditions exist, use 1 or more of following procedures:
a. Place concrete at night or early in morning.
b. Cool ingredients before mixing to maintain concrete temperature below 95 degrees F at time of placement. Chilled mixing water or chopped ice may be used to control temperature; include water equivalent of ice in mixing water quantity. Use liquid nitrogen to cool concrete at CONTRACTOR's option.
c. Cover steel reinforcement with water-soaked burlap so steel temperature will not exceed ambient air temperature immediately before embedding in concrete.

d. Fog-spray forms, steel reinforcement, and subgrade just before placing concrete. Keep subgrade moisture uniform without standing water, soft spots, or dry areas.
e. Provide windbreaks or sunshades, or both.
f. Cool pump pipelines by shading, running cool water over, or other means as necessary.

I. Mass Concreting
1. Protect concrete work from physical damage or reduced strength due to thermal effects of mass concreting, per ACI 207.1R.

3.13 FINISHING AND CURING

A. Finishing Top Surfaces:
1. Float and broom finish:
a. Float finish: Consolidate surface with power-driven float or by hand floating if area is small or inaccessible to power driven float. Restraighten, cut down high spots, and fill low spots. Repeat float passes and restraightening until surface is left with uniform, smooth, granular texture.
b. Medium-Broom Finish: Apply medium-broom finish, perpendicular to traffic flow, on top surfaces subjected to vehicular or pedestrian traffic.
c. Do not wet concrete surfaces or add cement.
2. Tined Finish:
a. Texture and tine freshly placed pavement as soon as possible after floating.
b. Use a rake with individual 1/8-inch wide tines spaced uniformly 5/8-inches on center. For machine work, use a 10-foot rake drawn transversely across the full pavement width without overlapping passes.
3. Float and trowel finish:
a. Float finish: Consolidate surface with power-driven float or by hand floating if area is small or inaccessible to power driven float. Restraighten, cut down high spots, and fill low spots. Repeat float passes and restraightening until surface is left with uniform, smooth, granular texture.
b. Trowel finish: After applying float finish, apply first trowel finish and consolidate concrete by hand or power-driven trowel. Continue troweling passes and restraighten until surface is free of trowel marks and uniform in texture and appearance.
c. Do not wet concrete surfaces or add cement.
4. At tops of walls, horizontal offsets, and similar unformed surfaces adjacent to formed surfaces, strike off smooth and finish with texture matching adjacent formed surfaces. Continue final surface treatment of formed surfaces uniformly across adjacent unformed surfaces, unless otherwise indicated.
5. Hot-Weather Conditions: Fog surface with water if hot, dry, or windy conditions cause moisture loss approaching 0.2 pounds per square foot per hour, as estimated by Figure 4.2 in ACI 305R, before or during finishing operations.

B. Finishing Formed Surfaces:
1. Rough-Formed Finish: As-cast concrete texture imparted by form-facing material with tie holes and defective areas addressed. All fins, runs, drips or projections shall be removed from surfaces which remain exposed. Form marks and chamfer edges shall be smoothed by grinding and/or dry rubbing. Remove fins and other projections exceeding 1/2-inch.

C. Concrete Curing:
1. General: Protect freshly placed concrete from premature drying and excessive cold or hot temperatures. Maintain concrete above 55-degree F and in moist condition for at least 7 days after placing.
a. For polymer-modified and silica-fume-modified materials, follow curing regimen recommended by manufacturer or developed in preconstruction testing.
b. Protect concrete from falling below 55 degrees F with insulating blankets or heated enclosures.

2. Unformed Top Surface: Begin curing immediately after finishing concrete. Use water-saturated, moisture-retaining cover, or other approved procedures.
   a. Place cover in widest practicable width, with sides and ends lapped at least 12-inches.
   b. Seal sides and ends of cover by holding down with soil, concrete pieces, or some other weight, or by using waterproof tape or adhesive.
   c. Immediately repair holes or tears in cover during curing period using cover material and waterproof tape.
   d. Re-wet concrete surface at least twice daily as necessary to ensure that surface remains moist.
3. Unformed Vertical and Overhead Surfaces: Apply 2 coats of curing compound uniformly in continuous operation by power spray or roller according to manufacturer's written instructions and recommended coverage rate. Recoat areas subjected to heavy rainfall within 3-hours after initial application. Maintain continuity of coating and repair damage during curing period.
4. Formed Surfaces:
   a. Maintain form surfaces in moist condition.
   b. Moist cure concrete after forms are stripped to achieve 7-day total cure period.

D. Stripping of Forms and Removal of Shoring:
1. Strip forms 24-hours minimum after concrete is placed unless otherwise directed by Contract Documents, OWNER and/or ENGINEER.
2. Remove shoring 24-hours minimum after concrete is placed and after rebuild concrete has achieved minimum compressive strength of 75 percent of the specified 28-day compressive strength, unless otherwise directed by Contract Documents, OWNER and/or ENGINEER.

3.14 DEFECTIVE CONCRETE REBUILD

A. Rebuild defective areas designated by OWNER and/or ENGINEER. Remove and replace concrete that cannot be repaired to satisfaction of OWNER and/or ENGINEER.

B. Surface defects on exposed surfaces include:
1. Voids, such as spalls, air bubbles, honeycomb, rock pockets, and form-tie voids, more than 1/2-inch in any dimension in solid concrete but not less than 1 inch deep.
2. Cracks at least 1/8 inch wide. Notify OWNER and/or ENGINEER of cracks that penetrate through section.
3. Fins and other projections exceeding 1/2-inch.
4. High or low spots in repaired areas that create areas of standing water that are at least 1/2-inch deep and at least 9 square feet in area.

C. Rebuild defects on concealed surfaces that affect concrete's durability and structural performance as determined by OWNER and/or ENGINEER.

D. As soon as possible, cut out spalls, air bubbles, honeycombs, rock pockets, and voids. Make edges of cuts perpendicular to concrete surface. Clean voids and fill with rebuild mortar according to manufacturer’s recommendations. Use polymer- or silica fume-modified, cementitious, non-sag mortar that is specifically intended for this application. Use one of following:
1. SikaTop 123 Plus; Sika Corporation.
2. Verticoat Supreme; Euclid Chemical Company.
3. Approved Equal.

E. Fill cracks with high-molecular-weight methacrylate or low-viscosity methyl methacrylate. Use one of following:
1. SikaPronto 19 TF; Sika Corporation.
2. Approved Equal.

F. After concrete has gained sufficient strength to be unaffected by grinding, grind off fins, other projections, and high areas.

3.15 CLEANING

A. Remove and legally dispose of concrete and steel debris, abrasive blast materials, and excess materials.

3.16 TABLES

TABLE 1: QUALITY CONTROL TESTING

Rebuild Material	Quality Assurance Testing	Quality Control Material Testing				
	Compression Strength (ASTM C39)	**Slump (ASTM C143) or Slump flow (ASTM C1611)**	**Unit Weight (ASTM C138)**	**Air Content (ASTM C231)**	**Concrete and Air Temp (ASTM C1064)**	**Additional Items (1/placement or material type)**
Proprietary Rebuild Material	1 set / 75 cu. ft. 1 set = 6 cylinders (2 - 3 days, 2 - 7 days, 2 - 28 days)	1 test / placement 1 test / material	1 test/ placement 1 test / material	1/placement 1/material	1 test /placement 1 test / material	Lot number Powder/water temp Weight of product bag Weight of water Mix time
Ready-Mix Rebuild Material	1 set / 20 cu. yd. min* 1 set = 6 cylinders (2 - 3 day, 2 - 7 days, 2 - 28 days)	1 test / truck*	1test / truck	1 test / truck	1 test / truck	Mix number Batch number Water added*

* 1 additional set/test for each time water is added to mix on-site

Table 2: Concrete Cover for Reinforcement

Reinforcement Type	**Min. Cover (inches)**
A. Floor slabs and walls not exposed to weather and not in contact with the ground, and not at surfaces exposed to water.	
1.) No. 11 bars or smaller	3/4
2.) No. 14 and No. 18 bars	1-1/2
B. Beams, girders and columns principal reinforcement, ties, stirrups or spirals not exposed to weather or water	1-1/2
C. Formed concrete exposed to weather or at surfaces exposed to water	
1.) No. 5 bars and smaller	1-1/2
2.) No. 6 bars and larger	2
D. Unformed concrete in contact with soil above water table	3
E. Formed concrete in contact with soil above water table	2
F. Unformed concrete in contact with soil below water table	4
G. Formed concrete in contact with soil below water table	3

3.17 DRAWINGS

A. The following figures represent typical or representative conditions and may not be indicative of in-situ conditions. The ENGINEER should review the conditions as necessary for applicability. *{Engineer to review Series 600 of Standard Details in Section 34 of HRSD Design and Construction Standards for applicability and inclusion}*

1. Standard Detail 626: Removal of Unsound Concrete – Typical Section
2. Standard Detail 627: Concrete Rebuild – Typical Section
3. Standard Detail 628: Concrete Rebuild to Provide Minimum Cover – Typical Section
4. Standard Detail 629: Removal of Unsound Concrete – Typical Corner Section
5. Standard Detail 630: Concrete Rebuild – Typical Corner Section
6. Standard Detail 631: Reinforcing Section Loss Table
7. Standard Detail 632: Lap Splice Plan – Option 1
8. Standard Detail 633: Lap Splice Lengths – Option 1
9. Standard Detail 634: Mechanical Splice – Option 2 (Typical Removal Section)
10. Standard Detail 635: Mechanical Splice – Option 2 (Typical Rebuild Section)
11. Standard Detail 636: Weld Splice – Option 3
12. Standard Detail 637: Weld Splice Details – Option 3
13. Standard Detail 638: Weld Splice Details – Option 3
14. Standard Detail 639: Supplemental Reinforcement Requirements
15. Standard Detail 640: Adhesive-Grouted Dowel Layout
16. Standard Detail 641: Typical Concrete Rebuild Section at Embed Plate
17. Standard Detail 642: Shallow Depth (2” Max.) Concrete Rebuild – Horizontal
18. Standard Detail 643: Shallow Depth (2” Max.) Concrete Rebuild – Vertical
19. Standard Detail 644: Partial-Depth Core Hole Concrete Rebuild
20. Standard Detail 645: Full-Depth Core Hole Concrete Rebuild

END OF SECTION

SECTION 03800
EMBEDDED GALVANIC ANODES FOR CONCRETE REBUILD

PART 1 - GENERAL

1.1 SUMMARY

A. Section includes:
   1. Supply and installation of embedded galvanic anodes encapsulated in concrete rebuilds or encasements.

1.2 RELATED SECTIONS

A. Following Work items are related to Work in this Specification, but are specified in other Specifications:
   1. Section 03700: Concrete Rebuild

1.3 DEFINITIONS

A. Anode – The electrode in electrolysis at which negative ions are discharged, positive ions are formed, or other oxidizing reactions occur.

B. Carbonation – The conversion of calcium ions in hardened cementitious materials to calcium carbonate by reaction with atmospheric carbon dioxide.

C. Cathode – The electrode at which chemical reduction occurs.

D. Cathodic Protection – A form of corrosion protection for reinforced concrete wherein a sacrificial metal is caused to corrode in preference to the reinforcement, thereby protecting the reinforcement from corrosion.

E. Conductivity – The degree to which a specified material conducts electricity.

F. Electrical Resistivity – A measure of the resistance of a material to flow of electric current.

G. Galvanic Corrosion – Accelerated corrosion of a metal because of an electrical contact with a more noble metal or nonmetallic conductor in a corrosive electrolyte.

H. Reinforcement Continuity – A condition in reinforced concrete in which the reinforcing steel is sufficiently interconnected to provide a path for electrical current.

I. Saturated Surface-Dry – Condition of an aggregate particle or other porous solid when the permeable voids are filled with water and no water is on the exposed surfaces.

1.4 REFERENCE STANDARDS

A. Reference Standards: Latest edition.
   1. American Concrete Institute (ACI):
      a. 222R-01: Protection of Metals in Concrete Against Corrosion
   2. ASTM International (ASTM):
      a. A1064: Standard Specification for Carbon-Steel Wire and Welded Wire Reinforcement, Plain and Deformed, for Concrete
      b. B418: Standard Specification for Cast and Wrought Galvanic Zinc Anodes

1.5 SUBMITTALS

A. Pre-Construction: Submitted prior to start of Work
   1. Product Data / Safety Data
      a. For each type of manufactured material and product indicated, including:
         1) Galvanic Anodes.
         2) Conductive Embedding Mortar.

2. Samples: Two galvanic anodes proposed for use.
3. Certification: From anode manufacturer that Installer is trained and approved to install anodes.

1.6 QUALITY ASSURANCE AND QUALITY CONTROL

A. Qualifications:
1. CONTRACTOR and/or subcontractor certified by anode manufacturer as trained and approved for anode installation.

B. Quality Control and Assurance Inspection:
1. Quality Assurance Inspections are to be performed at critical steps throughout the rebuild process. Unless indicated otherwise, the OWNER, ENGINEER and/or Quality Assurance Representative shall perform inspections to verify conformance with Contract Documents.
2. CONTRACTOR's Quality Control Supervisor shall perform initial inspections and correct any items not in conformance with requirements herein and Contract Documents prior to requesting Quality Assurance Inspection.
3. Typical quality control and assurance inspection points are listed below. Quality Assurance Inspection Hold Points are indicated in **bold**. Do not proceed with Work that may make hold point inspections difficult or impossible to perform until inspection has been completed and deficiencies corrected, unless OWNER and/or ENGINEER waives specific inspection requirements.

a. Quality Assurance Checklist

1) _____ Review and approval of Submittals for conformance with specification requirements.

2) _____ Reinforcing steel continuity is verified.

3) _____ Proposed layout and spacing of galvanic anodes.

4) _____ Installation of galvanic anodes as specified.

5) _____ Continuity achieved between installed galvanic anodes and reinforcement.

6) _____ Mixing and placement of conductive embedding mortar (if required).

1.7 DELIVERY, STORAGE AND HANDLING

A. Delivery, store, and handle materials according to manufacturer's recommendations and in such manner as to prevent damage to materials and structure.

B. Remove and replace materials that cannot be installed within stated shelf life.

PART 2 - PRODUCTS

2.1 MATERIALS

A. Source Limitations: Obtain materials through one source from single manufacturer.

B. Discrete Galvanic Anodes in Concrete Rebuilds:

1. Alkali-activated, Type 1A, consisting of zinc in compliance with ASTM B418 Type II cast around steel tie wires and encased in a highly alkaline cementitious shell with a pH of 14 or greater. The cementitious shell shall contain no chlorides or other corrosive constituents as per ACI Guideline No. 222R-01. Anodes shall be supplied with integral tie wires for tying to the reinforcing steel. Use one of following unless otherwise specified by OWNER and/or ENGINEER:
    a. HRSD System #1: Low-to-Moderate Corrosion:
        1) Galvashield XP (Zinc Mass = 60g); Vector Corrosion Technologies.
        2) Galvashield XPT (Zinc Mass = 60g); Vector Corrosion Technologies.
        3) Sika FerroGard 650 (Zinc Mass = 65g); Sika Corporation.
        4) Sentinel Silver Galvanic Anodes (Zinc Mass = 100g); Euclid Chemical Company.
        5) Approved Equal.
    b. HRSD System #2: Moderate-to-High Corrosion:
        1) Galvashield XP2 (Zinc Mass = 100g); Vector Corrosion Technologies.
        2) Galvashield XP4 (Zinc Mass = 160g); Vector Corrosion Technologies.
        3) Sika FerroGard 670 (Zinc Mass = 105g); Sika Corporation.
        4) Sentinel Gold Galvanic Anodes (Zinc Mass = 200g); Euclid Chemical Company.
        5) Approved Equal.

C. Distributed Galvanic Anodes in Concrete Rebuilds:
1. Alkali-activated consisting of zinc in compliance with ASTM B418 Type II cast around steel tie wires and encased in a highly alkaline cementitious shell with a pH of 14 or greater. The anode unit shall include FRP reinforcing and shall contain no chlorides or other corrosive constituents as per ACI Guideline No. 222R-01. Anodes shall be supplied with integral tie wires for tying to the reinforcing steel. Use one of following unless otherwise specified by OWNER and/or ENGINEER:
    a. HRSD System #3: Low Corrosion:
        1) Galvanode DAS (Zinc Weight = 0.25 lb/ft); Vector Corrosion Technologies.
        2) Approved Equal.
    b. HRSD System #4: Moderate Corrosion:
        1) Galvanode DAS (Zinc Weight = 0.60 lb/ft); Vector Corrosion Technologies.
        2) Approved Equal.
    c. HRSD System #5: High Corrosion:
        1) Galvanode DAS (Zinc Weight = 1.20 lb/ft); Vector Corrosion Technologies.
        2) Approved Equal.

D. Drilled-In Galvanic Anodes
1. Alkali-activated, Type 2A, consisting of zinc in compliance with ASTM B418 Type II cast around steel tie wires and encased in a highly alkaline cementitious shell with a pH of 14 or greater. The cementitious shell shall contain no chlorides or other corrosive constituents as per ACI Guideline No. 222. Anodes shall be supplied with integral tie wires for tying to the reinforcing steel. Use one of following unless otherwise specified by OWNER and/or ENGINEER:
    a. HRSD System #6: Low-to-Moderate Corrosion:
        1) Galvashield CC65; Vector Corrosion Technologies.
        2) Approved Equal.
    b. HRSD System #7: Moderate-to-High Corrosion:
        1) Galvashield CC100; Vector Corrosion Technologies.
        2) Approved Equal.
    c. HRSD System #8: Congested Reinforcement:
        1) Galvashield CC135; Vector Corrosion Technologies.
        2) Approved Equal.

E. Galvanic Anode Spacing:
   1. The location and spacing of galvanic anodes shall be determined by the OWNER, ENGINEER and/or Quality Assurance Representative based on field conditions and existing configuration and density of reinforcing steel. The steel density ratio is defined as the ratio of the steel reinforcing surface area to the concrete surface area. Reference Contract Documents or OWNER and/or ENGINEER for specific spacing requirements. The following are minimum requirements unless specified elsewhere:
      a. Discrete Galvanic Anodes
         1) HRSD System #1: Low-to-Moderate Corrosion:
            a) Steel Density ≤ 1.0; Spacing ≤ 18-inches on-center (o.c.).
            b) Steel Density > 1.0; Spacing ≤ 12-inches o.c.
         2) HRSD System #2: Moderate-to-High Corrosion:
            a) Spacing ≤ 12-inches o.c.
      b. Distributed Galvanic Anodes
         1) HRSD System #3: Low Corrosion:
            a) Steel Density ≤ 1.0; Spacing (ties) ≤ 18-inches o.c.
            b) Steel Density > 1.0; Spacing (ties) ≤ 12-inches o.c.
         2) HRSD System #4: Moderate Corrosion:
            a) Spacing (ties) ≤ 12-inches o.c.
         3) HRSD System #5: High Corrosion:
            a) Spacing (ties) ≤ 6-inches o.c.
      c. Drilled-In Galvanic Anodes
         1) HRSD System #6: Low-to-Moderate Corrosion:
            a) Steel Density ≤ 1.0; Spacing ≤ 18-inches o.c.
            b) Steel Density > 1.0; Spacing ≤ 12-inches o.c.
         2) HRSD System #7: Moderate-to-High Corrosion:
            a) Spacing ≤ 12-inches o.c.
         3) HRSD System #8: Congested Reinforcement:
            a) Spacing to be determined by OWNER and/or ENGINEER.

F. Conductive Embedding Mortar
   1. Conductive embedding mortar shall be compatible with galvanic anodes to be used and accepted for use by anode manufacturer. Use one of the following:
      a. Galvashield Embedding Mortar; Vector Corrosion Technologies.
      b. Eucopatch; Euclid Chemical Company.
      c. SikaRepair 222 or 223; Sika Corporation.
      d. Approved Equal.

G. Epoxy for Distributed Galvanic Anode
   1. Epoxy shall be 100% solids, non-conductive unless otherwise specified. Use one of the following:
      a. Sikadur 32, Hi-Mod; Sika Corporation.
      b. Approved Equal.

PART 3 - EXECUTION

3.1 GENERAL

A. Prepare substrate and rebuild area in accordance with Section XXXX *{Engineer to specify}*.
   1. Remove sufficient concrete at anode locations to permit anode installation.
   2. Clean exposed reinforcing steel of rust, mortar, and other inhibiting materials to provide sufficient electrical connection and mechanical bond.

B. Install galvanic anodes in accordance with requirements herein with spacing as specified by the Contract Documents, OWNER and/or ENGINEER. Anode spacing will vary with changes in the reinforcing steel density, the level of chloride in the concrete, and the corrosivity of the local environment. Representative spacing requirements are provided herein and are based on existing conditions and exposure. Reference Drawing 01-08 through 01-14 *{Engineer to specify}* for representative discrete and distributed galvanic anode layout, spacing and installation requirements.

C. Provide minimum 1-1/2 inch concrete cover over anodes unless otherwise specified by OWNER and/or ENGINEER.

D. Electrically connect anodes to clean reinforcing bars.
   1. Wrap anode wires around reinforcing bar and twist tight to allow no free movement.
   2. Confirm electrical continuity of reinforcing steel in removal area and of anodes with reinforcing steel by measuring DC resistance with a multi-meter. Resistance shall be less than 1 ohm.
   3. If continuity of reinforcing steel is not acceptable, add additional steel tie wires or supplemental reinforcing until continuity is acceptable.
   4. If continuity of anode to reinforcing steel is not acceptable, modify wrapping of anode tie wires until acceptable.
   5. If continuity cannot be achieved after implementing additional measures as specified above, notify OWNER and/or ENGINEER for additional direction.

E. Install conductive embedding mortar (if required).

F. Install concrete rebuild material per Section XXXX *{Engineer to specify}*, exercising care to avoid disturbing anodes.

3.2 INSTALLATION OF DISCRETE GALVANIC ANODES

A. Discrete galvanic anodes shall be installed along the perimeter of the repair or interface with spacing as specified.

B. Position anodes as close to rebuild perimeter as possible. Locate at intersections of bars if possible.

C. Position anodes to provide at least 1-1/2 inches of clear cover. If necessary, position anodes next to, or underneath, reinforcing bars.

D. Provide at least 1-inch clearance between anodes and existing concrete substrate sufficient to allow repair material to encase anode.

E. Electrically connect anodes to clean reinforcing bars as close as possible to edge of removal area.
   1. Confirm electrical continuity of reinforcing steel in removal area and of anodes with reinforcing steel by measuring DC resistance with a multi-meter. Resistance shall be less than 1 ohm.

F. Encapsulate anodes in conductive embedding mortar and fill gaps between anodes and concrete substrate with conductive mortar as recommended by anode manufacturer. Encapsulation of anodes with conductive embedding mortar is not required for anodes to be placed within concrete material with measured resistivity values less than 15,000 ohm-cm.

G. Pre-soak anodes prior to placement of concrete rebuild material. Do not soak anodes for greater than 20 minutes unless otherwise specified by anode manufacturer.

H. Install concrete rebuild material per Section XXXX *{Engineer to specify}*, exercising care to avoid disturbing anodes.

3.3 INSTALLATION OF DISTRIBUTED GALVANIC ANODES

A. Distributed galvanic anodes shall be installed along the perimeter of the repair, or at locations as specified by Contract Documents, OWNER and/or ENGINEER.

B. Position anodes to provide at least 1-1/2 inches of clear cover.

C. Provide at least 1-inch clearance between anodes and existing concrete substrate sufficient to allow repair material to encase anode.

D. Electrically connect anodes to clean reinforcing bars. Space ties at locations as specified by Contract Documents, OWNER and/or ENGINEER. At a minimum, spacing shall be in accordance with requirements herein.
   1. Confirm electrical continuity of reinforcing steel in removal area and of anodes with reinforcing steel by measuring DC resistance with a multi-meter. Resistance shall be less than 1 ohm.

E. Encapsulate anode wires and reinforcing steel at connection points with 100% solids, non-conductive, epoxy coating.

F. Install concrete rebuild material with resistivity values less than 15,000 ohm-cm, unless otherwise approved by OWNER and/or ENGINEER, per Section XXXX *{Engineer to specify}*, exercising care to avoid disturbing anodes.

3.4 INSTALLATION OF DRILLED-IN GALVANIC ANODES

A. General
   1. Reference Drawing 01-11 *{Engineer to specify}* for plan and section details of typical drilled-in galvanic anode installations.
   2. Using a rebar location device (pachometer or equivalent), locate all existing reinforcing steel within the area designated for protection and clearly mark reinforcing layout on exterior concrete surface for examination by OWNER and/or ENGINEER.
      a. In areas where known, or potential, embedded conduit or other obstructions may be present, utilize ground penetrating radar (GPR) or other means for determining the location of rebar and embedded obstructions.
   3. Drill a minimum of four 1/2-inch diameter holes at rebar locations to verify continuity of existing underlying reinforcing steel. It is recommended that locations be consistent with presumed reinforcing steel connection (tie-in) points to the furthest extent possible. Continuity shall be measured using DC resistance with a multi-meter. Continuity measurements shall be deemed acceptable for resistance of 1 ohm or less. Should resistance exceed 1 ohm, OWNER and/or ENGINEER to determine recommended course of action.
   4. Based on layout of located rebar and embedded obstructions, OWNER and/or ENGINEER to designate locations for anode placement and rebar connection.
      a. Anodes shall be installed 4-inches (min) from reinforcing grid designated for protection unless otherwise specified by Anodes shall be installed 4-inches (min) from reinforcing grid designated for protection unless otherwise specified by ENGINEER.
   5. Drill anode unit holes to specified diameter and depth in accordance with manufacturer recommendations based on anode unit size. Do not enlarge holes.
   6. Thoroughly clean reinforcing steel connection and anode drilled-hole locations utilizing a stiff wire brush, or equivalent. Remove dust, debris and contaminants utilizing compressed air or pressurized water.
   7. Connection to reinforcing steel shall be made using manufacturer approved methods and shall utilize manufacturer specified connection kit units (if applicable). Continuity shall be measured using DC resistance with a multi-meter. Continuity measurements shall be deemed acceptable for resistance of 1 ohm or less.
   8. Saturate Surface Dry (SSD) drilled holes for 2-hours (min) prior to installation of anodes and conductive embedding mortar.
      a. Pre-soak anode units as required by manufacturer.
   9. Install conductive embedding mortar into bottom two-thirds (by depth) of drilled SSD anode unit holes, unless otherwise specified by manufacturer.

10. Install anode units by slowly pressing units into the embedding mortar, allowing the mortar to fill the annular space around the units. Ensure no air voids exist between the unit anode and parent concrete. Ensure minimum anode unit concrete cover depth of 3/4-inch.
    a. Interconnect anode unit wiring with reinforcing steel connection wiring and place wiring securely into saw-cut grooves. Connect wiring in accordance with manufacturer recommendations and utilizing manufacturer recommended installation kits (if applicable). Top off anode unit holes and fill saw-cut grooves with embedding mortar.
    b. Wet cure embedding mortar for minimum 24-hours and as recommended by manufacturer.

B. For Series Connection
1. A single circuit shall contain no more than 10 anode units.
2. Drill two (min) 1/2-inch reinforcing steel connection holes per string of anodes.
3. Saw-cut a single continuous groove approximately 1/4-inch wide by 1/2-inch deep into the concrete along the proposed anode series arrangement to interconnect reinforcing steel connection holes with the anode connection holes.

C. For Individual Connection
1. Drill one 1/2-inch rebar connection hole per anode unit location.
2. Saw-cut a groove approximately 1/4-inch wide by 1/2-inch deep into the concrete to interconnect the reinforcing steel connection hole with the anode connection hole.

3.5 DRAWINGS

A. The following figures represent typical or representative conditions and may not be indicative of actual field conditions. The OWNER and/or ENGINEER should review the conditions as necessary for applicability. *{Engineer to review Series 600 of Standard Details in Section 34 of HRSD Design and Construction Standards for applicability and inclusion}*
1. Standard Detail 600: Installation of Discrete Galvanic Anodes
2. Standard Detail 601: Installation of Distributed Galvanic Anodes
3. Standard Detail 602: Distributed Galvanic Anodes at Top of Wall
4. Standard Detail 603: Installation of Drilled-In Galvanic Anodes
5. Standard Detail 604: Conductive Mortar Bridge for Use with High Resistivity Repair Mortars
6. Standard Detail 605: Typical Galvanic Anode Layout
7. Standard Detail 606: Typical Galvanic Anode Connections

END OF SECTION

SECTION 07160
REACTIVE WATERPROOFING

PART 1 - GENERAL

1.1 SUMMARY

A. Section includes:
   1. Specification, preparation and installation of hydrophilic polyurethane resin chemical grout injection for waterproofing and sealing of concrete cracks and joints.
   2. Specification, preparation and installation of hydrophobic polyurethane resin chemical grout injection for waterproofing and sealing of concrete cracks and joints.
   3. Specification, preparation and installation of hydrophobic polyurethane resin chemical grout injection for soil stabilization.

1.2 RELATED SECTIONS

A. The following are related to Work in this Section, but are specified in other Sections:
   1. Section 07900 – Joint Sealant and Expansion Joint Systems

1.3 DEFINITIONS

A. Catalyst – A substance that increases the rate of a chemical reaction.

B. Elongation – The degree to which a material may be bent, stretched or compressed before it ruptures.

C. Hydrophilic – Having a tendency to react with, mix with, dissolve in or be wetted by water.

D. Hydrophobic – Having a tendency to repel or fail to mix with water.

E. Viscosity – A measure of a fluid's resistance to flow.

1.4 REFERENCE STANDARDS

A. Reference Standards (Refer to the latest edition):
   1. American Society for Testing and Materials (ASTM):
      a. ASTM C273: Standard Test Method for Shear Properties of Sandwich Core Materials
      b. ASTM D93: Standard Test Methods for Flash Point by Pensky-Martens Closed Cup Tester
      c. ASTM D638 Standard Test Method for Tensile Properties of Plastics
      d. ASTM D1622: Standard Test Method for Apparent Density of Rigid Cellular Plastics
      e. ASTM D2196: Standard Test Methods for Rheological Properties of Non-Newtonian Materials by Rotational Viscometer
      f. ASTM D2369: Standard Test Methods for Volatile Content of Coatings
      g. ASTM D2842: Standard Test Method for Water Absorption of Rigid Cellular Plastics
      h. ASTM D3278: Standard Test Methods for Flash Point of Liquids by Small Scale Closed-Cup Apparatus
      i. ASTM D3574: Standard Test Methods for Flexible Cellular Materials – Slab, Bonded, and Molded Urethane Foams
      j. ASTM D4016: Standard Method for Viscosity and Gel Time of Chemical Grouts by Rotational Viscometer
      k. ASTM D4659: Standard Test Method for Polyurethane Raw Materials: Determination of Specific Gravity of Isocyanates
      l. ASTM D5202: Standard Test Method for Determining Triaxial Compression Creep Strength of Chemically Grouted Soils
      m. ASTM D6286: Standard Guide for Selection of Drilling Methods for Environmental Site Characterization

n. ASTM D8109: Standard Test Method for Viscosity and Gel Time of Chemical Grouts by Rotational Viscometer
o. ASTM D8109: Standard Guide for Waterproofing Repair of Concrete by Chemical Grout Crack Injection
p. ASTM E2128: Standard Guide for Evaluating Water Leakage of Building Walls
q. ASTM F2304: Standard Practice for Sealing of Sewers Using Chemical Grouting
r. ASTM F2414: Standard Practice for Sealing Sewer Manholes Using Chemical Grouting
s. ASTM F2454: Standard Practice for Sealing Lateral Connections and Lines from the Mainline Sewer Systems by the Lateral Packer Method, Using Chemical Grouting

2. International Concrete Repair Institute (ICRI):
   a. Guideline No. 340.1 Guide for the Selection of Grouts to Control Leakage in Concrete Structures
3. U.S. Army Corps of Engineers:
   a. Manual No. 1110-1-3500 Chemical Grouting

1.5 SUBMITTALS

A. CONTRACTOR shall provide the following submittals, specific to this Section, to OWNER for review and/or approval:
   1. Pre-Award Submittals: Submitted as part of the Bid Process.
      a. CONTRACTOR and Subcontractor qualifications:
         1) Include CONTRACTOR and individual certifications, licenses, work experience and related documentation.
         2) Include evidence that company has a minimum of 3-years experience in application of specified materials. Submit list of at least three completed Projects of similar scope and size, including:
            a) Project Name.
            b) Owner's Name.
            c) Owner's Representative's Name, Address and Contact Information.
            d) Description of Work.
            e) Product(s) / Material(s) Used.
            f) Project Manager / Supervisor.
            g) Total cost of Work.
            h) Start and Completion Date.
      b. Intent to Warrant and Sample Warranty:
         1) Copy of warranty, stating obligations, remedies, limitations, and exclusions.
   2. Pre-Construction Submittals: Submitted prior to Work.
      a. Product Data / Safety Data: Material manufacturer's literature including written instructions for evaluating, preparing and treating substrate, technical data including tested physical and performance properties, installation instructions and safety data.
      b. Letter from Manufacturer indicating that specific products and auxiliary products are recommended for the intended application and exposures on Project. Based on mockups, include specific recommendations for surface preparation and installation for Project.
      c. Quality Control Forms:
         1) To be submitted as part of Quality Control System.
      d. Product Samples.
      e. Proposed layout of drilled holes for injection, estimated volume of material based on known conditions, etc.
   3. During Construction: Submitted at specified intervals during construction.
      a. Quality Control Documentation (weekly or as requested).
      b. Quality Assurance Documentation.
   4. Closeout Documents: Submitted upon Project completion and prior to final payment.
      a. Final Warranty.

b. Submit a letter from the material manufacturer indicating that a representative portion of all major steps in the Work were inspected by the manufacturer and that all that work was performed in accordance with the manufacturer's recommendations and instructions.
c. Record Documentation.
   1) Includes as-built documentation and records of work completed such as red-lines drawings, specifications, etc.
d. Construction Photos.
e. Quality Control Documentation.

1.6 QUALITY CONTROL AND ASSURANCE REQUIREMENTS

A. Installer Qualifications:
   1. Approved, authorized, or licensed by the material manufacturer to install specified product and/or system, and eligible to receive material manufacturer's warranty.
   2. Must have documented installations of specified materials in local area in use for minimum of 3 years.
      a. Employ foreman with minimum 3-years of experience as foremen on similar projects to be on-site at all times.
      b. Employ only personnel who have been trained, or approved, by the material manufacturer in writing as being qualified to perform the Work covered herein.

B. Quality Control:
   1. General:
      a. Verify existing conditions and details prior to installation of materials. Notify OWNER of conditions found to be different than those indicated in Contract Documents. OWNER will review situation and inform CONTRACTOR and Applicator of changes.
      b. Inspect all materials upon receipt to verify product and condition.
      c. Inspect to verify that specified storage conditions for materials are provided
      d. Do not use or retain contaminated, outdated, or improperly stored materials. Do not use materials from previously opened containers.
      e. Make available all locations and phases of the work for periodic and/or required observation and/or inspection by OWNER, OWNER's designated representative and/or Quality Assurance Inspector.
         1) The CONTRACTOR shall provide necessary access, support, ventilation, egress, safety and other means required.
      f. Provide daily quality control reports to OWNER on a weekly basis, or as requested. Submit reports in a Portable Document Format (PDF). At a minimum, Quality Control Report's shall include:
         1) Project Identification.
         2) Date and Time(s).
         3) Atmospheric and Ambient Conditions.
         4) Inspector and Foreman Identification.
         5) Number of Workers On-Site.
         6) Work Area(s).
         7) Work Scope Performed.
         8) Work Progress.
         9) Product Data (Name, Lot, Exp.).
         10) Substrate and Application Conditions.
         11) Quality Control Inspections.
         12) Quality Assurance Inspections (Internal and By Others).
         13) Other Pertinent Information.
      g. The methods of construction shall be in accordance with requirements of the Contract Documents and best trade practices unless otherwise permitted by OWNER.

C. Inspection by OWNER, OWNER's designated representative or Quality Assurance Inspector does not limit the CONTRACTOR's responsibilities for inspection, quality workmanship or quality control as specified herein or as required by the Manufacturer's instructions.

D. Mockups: For each material and/or system to be installed, prepare and install to a representative location designated by OWNER to demonstrate quality of materials, execution and effectiveness.
   1. Material manufacturer's representative and Quality Assurance Inspector shall observe mockup and approve, in writing, preparation, execution and installation.
   2. If Quality Assurance Inspector determines mockup does not comply with requirements, modify mockup or construct new mockup until mockup is approved. Do not proceed with Work until mockup is approved.
   3. Approved mockup will be acceptance standard for remainder of Work.
   4. Mockup requirements will be waived by OWNER and/or ENGINEER where multiple locations and/or applications are not required and/or practicable.

E. Quality Assurance Testing and Inspection:
   1. Quality assurance observation and inspection will be performed by qualified Quality Assurance Inspector's to be provided by OWNER.
      a. Refer to Contract Documents for general quality assurance reporting requirements.
      b. Observation and/or inspection frequency may be increased or decreased at OWNER's discretion.
      c. Quality assurance observation and inspection includes, but is not limited to:
         1) Crack and/or joint preparation, routing, etc.
         2) Installation of crack and/or joint surface sealer, overlay, etc. required to retain required pressures during installation.
         3) Proposed locations and installation techniques of injection port placements.
         4) Verification of materials to be installed.
         5) Installation of injection materials.
         6) Water testing to verify functionality of installed materials.
      d. Inspection reports shall include date when material(s) was installed, name of installer, material lot/batch number, location(s)/mapping of installed material, volume of product installed and related information.
      e. Where Quality Assurance Inspector determines Work does not comply with requirements, CONTRACTOR shall remedy non-conformance by means of replacement, additional application and/or other suitable means at CONTRACTOR's expense.

F. Inspection Hold Points:
   1. The Quality Assurance Inspector shall conduct hold point inspections. The CONTRACTOR is required to coordinate such hold points in the Work with OWNER or its designated representative such that inspections can be performed on a scheduled basis. CONTRACTOR shall provide OWNER a minimum 48-hour advanced notice for required quality assurance hold point inspections.
   2. Refer to Checklist's herein for typical chemical grout Quality Control/Assurance checklist for cementitious and soil applications. OWNER and/or their designated representative may modify the contents of Quality Control/Assurance checklists as required based on Project needs, changes, constraints, etc.

G. Identification and Resolution of Conflicts
   1. It shall be the responsibility of the CONTRACTOR to notify OWNER of any conflicts, obstructions, discrepancies and similar items related to Contract Document content, specifications, instructions, field conditions, weather, etc. promptly upon discovery by means of a formally submitted Request for Information (RFI).

1.7 WARRANTY

A. CONTRACTOR & Manufacturer Joint Warranty, include:
   1. Labor and materials for remediation to address non-performing, defective and/or otherwise non-conforming materials and/or installations. Non-performance, defects and/or conformance includes, but is not limited to:
      a. Material defects of installed product identified at the time of installation and/or at a later date.
      b. Loss of moisture sealing/retaining abilities.
      c. Failure to adequately seal cracks and/or joint at area(s) of Work that were intended to be sealed.
   2. Remediation shall include, but is not limited to:
      a. Installation of additional materials to address unsealed portions of Work.
      b. Installation of alternate materials to achieve intended function of original installation material.
   3. Warranty Period: 1 year (min) from date of Project Completion.

1.8 DELIVERY, STORAGE AND HANDLING

A. Adhere to requirements herein and applicable requirements within the Contract Documents.

B. Deliver, store, and handle materials according to manufacturer's recommendations and in such manner as to prevent damage to materials and structure.

C. Deliver materials to Project site in original containers with seals unbroken, labeled with:
   1. Product name or title of material.
   2. Manufacturer’s stock/batch number
   3. Date of manufacture and shelf life, or expiration date.
   4. Application and mixing instructions.
   5. Handling instructions and precautions.
   6. Hazardous material identification label

D. Keep materials dry and do not allow materials to be exposed to moisture during transportation, storage, handling, or installation. Reject and remove from Site new materials which exhibit evidence of moisture during application or which have been exposed to moisture.

E. Store materials in original, undamaged containers in a clean, dry, protected location on raised platforms with weather-protective coverings, within temperature range required by manufacturer. Protect stored materials from direct sunlight. Manufacturer’s standard packaging and covering are not considered adequate weather protection.

F. Limit stored materials on structures to safe loading of structure at time materials are stored, and to avoid permanent deck deflection.

G. Handle and store materials to prevent damage.

H. Conspicuously mark damaged or opened containers, expired materials and/or diluted materials and remove from site as soon as possible.

I. Dispose materials in accordance with local, state and federal laws, rules and regulations.

1.9 CLEANING

A. At end of each workday, clean site and work areas and place rubbish, containers, rags, and other discarded materials in appropriate disposal containers.

B. Clean off excess grout and/or material as Work progresses by methods and with cleaning materials approved in writing by the manufacturer. Exercise care to avoid damage to adjacent surfaces, equipment, etc. Remedy surfaces stained, marred, or otherwise damaged during Work.

C. At conclusion of Work, clean up debris and surplus materials and remove from site.

1.10 SAFETY

A. Adhere to requirements herein and applicable requirements within the Contract Documents.

B. The CONTRACTOR is required to attend a safety briefing with OWNER prior to Work.

C. The CONTRACTOR shall ensure OWNER and CONTRACTOR personnel are aware of any hazards peculiar to the jobsite.
   1. Provide and/or identify location(s) of available first aid stations, eye wash stations and pertinent safety equipment.
   2. Provide contact information of responsible personnel and emergency phone numbers.
   3. Obtain contact information for OWNER stakeholders and pertinent OWNER site personnel.
   4. Determine and communicate evacuation routes.

D. Keep all work areas clean and safe.

E. Obey all plant rules and regulations.

F. The CONTRACTOR shall conduct all work covered by this section in accordance with all pertinent OSHA regulations.

1.11 CHANGES IN WORK

A. During Work, existing conditions may be encountered which are not known or are at variance with the Contract Documents. Such conditions may interfere with Work and may consist of damage or deterioration of substrate or installed materials that could jeopardize integrity or performance of the material(s) and/or system(s).

B. Notify OWNER of conditions that may interfere with proper execution of Work or jeopardize integrity of new material(s) and/or system(s) prior to proceeding with Work.

PART 2 - PRODUCTS

2.1 PRODUCTS AND MATERIALS

A. General:
   1. Source Limitations: Obtain product(s) through one source from single manufacturer, or from sources approved by material manufacturer.
   2. Material Compatibility: Provide materials that are compatible with one another and with concrete substrates under conditions of service and application, as demonstrated by material manufacturer based on testing on similar projects, mockups inspection and testing for this project and field experience.

B. Hydrophilic Polyurethane Chemical Grout (For Cementitious Substrate):
   1. General
      a. Utilizes existing moisture to initiate expansive properties of material.
      b. For use as a reactive expanding sealer/filler to seal and waterproof moving and non-moving cracks, joints, voids and/or other openings in actively leaking and/or saturated cementitious substrates.
      c. For use to seal large openings, cracks and/or joints through the injection of material into saturated oakum or open-celled foam and backer rod to form an impermeable gasket.
      d. Not for use as a structural epoxy-resin sealer.
   2. HRSD System #1: Hydrophilic Polyurethane Chemical Grout; Medium Viscosity (500 – 750 cps); High Elongation (> 300%):
      a. For primary use to seal most conventional and larger crack widths where high elongation properties are desired.
      b. Not recommended for use to seal hairline cracking and/or thick cementitious substrates where hairline cracking may exist within its matrix.
         1) Products:
            a) Sikafix HH; Sika Corporation.

b) Dural Aqua-Fil; Euclid Chemical.
c) AV-330 Safeguard; Avanti
d) ST-526 Poly-Foam Ultra Injection Resin; Strata-Tech, Inc.
e) Approved Equal.

3. HRSD System #2: Hydrophilic Polyurethane Chemical Grout ; Low Viscosity (250 – 450 cps); Elongation (> 100%):
   a. For primary use to seal conventional and hairline crack widths.
   b. Recommended for thick cementitious substrates where hairline cracking may exist within its matrix.
      1) Products:
         a) De Neef Sealfoam PURe; GCP Applied Technologies Inc.
         b) Hydro Gel SX; Prime Resins, Inc.
         c) Prime Flex 900 XLV; Prime Resins, Inc.
         d) Approved Equal.
4. Auxiliary Materials:
   a. Oakum: Oil free conforming to Federal Specification HH-P-117.
      1) Used as a fibrous filler reinforcement material with polyurethane chemical grout to seal cracks, joints and other openings exceeding 1/4-inch (W).
      2) Use one of the following:
         a) De Neef Dry Oakum by GCP Applied Technologies Inc.
         b) Approved Equal.
   b. Open-Cell Polyethylene or Polyester Foam: Sheet, backer rod or other shapes.
      1) Used as a filler and reinforcement material with polyurethane chemical grout to seal cracks, joints and other openings exceeding 1/4-inch (W).
   c. Injection Ports: As recommended by manufacturer.
   d. Surface Sealer / Filler / Hydraulic Cement: As recommended by manufacturer.

C. Hydrophobic Polyurethane Chemical Foam Grout (For Cementitious Substrate):
1. General:
   a. Utilizes a catalyst (activator) to initiate expansive properties of material.
   b. For use as a reactive expanding sealer/filler to seal and waterproof moving and non-moving cracks, joints, voids and/or other openings in cementitious substrates that are not actively leaking during installation.
   c. For use to seal large openings, cracks and/or joints through the injection of material into saturated oakum or open-celled foam and backer rod to form an impermeable gasket.
   d. Not for use as a structural epoxy-resin sealer.
2. HRSD System #3: Hydrophobic Polyurethane Chemical Grout; Medium Viscosity (450 – 650 cps); High Elongation:
   a. For primary use to seal most conventional and larger crack widths where high elongation properties are desired.
   b. Not recommended for use to seal hairline cracking and/or thick cementitious substrates where hairline cracking may exist within its matrix.
      1) Products:
         a) De Neef Flex LV PURe; GCP Applied Technologies Inc.
         b) Sikafix HH LV; Sika Corporation.
         c) Dural Aqua-Dam; Euclid Chemical.
         d) Prime Flex 940; Prime Resins, Inc.
         e) AV-248 Flexseal; Avanti.
         f) Resfoam HB 45; MAPEI.
         g) Approved Equal.
3. HRSD System #4: Hydrophobic Polyurethane Chemical Grout; Low Viscosity (100 – 450 cps):
   a. For primary use to seal conventional and hairline crack widths.
   b. Recommended for thick cementitious substrates where hairline cracking may exist within its matrix.

1) Products:
a) De Neef Flex SLV PURe; GCP Applied Technologies Inc.
b) AV-248-LV Flexseal LV; Avanti.
c) Prime Flex 920; Prime Resins, Inc.
d) Approved Equal.

4. Auxiliary Materials:
a. Oakum: Oil free conforming to Federal Specification HH-P-117.
1) Used as a fibrous filler reinforcement material with polyurethane chemical grout to seal cracks, joints and other openings exceeding 1/4-inch (W).
2) Use one of the following:
a) De Neef Dry Oakum; GCP Applied Technologies Inc.
b) Approved Equal.
b. Open-Cell Polyethylene or Polyester Foam: Sheet, backer rod or other shapes.
1) Used as a filler and reinforcement material with polyurethane chemical grout to seal cracks, joints and other openings exceeding 1/4-inch (W).
c. Injection Ports: As recommended by manufacturer.
d. Surface Sealer / Filler: As recommended by manufacturer.

D. Hydrophobic Polyurethane Chemical Foam Grout (For Soils):
1. General:
a. For use as a reactive expanding sealer/filler to stabilize loose sand or soils.
2. HRSD System #5: Hydrophobic Polyurethane Chemical Grout; Ultra-Low Viscosity (≤ 50 cps):
a. Products:
1) De Neef Soil PURe; GCP Applied Technologies Inc.
2) Prime Flex 910; Prime Resins, Inc.
3) AV-550 Soil Strengthener; Avanti.
4) Approved Equal.

PART 3 - EXECUTION

3.1 GENERAL

A. Coordinate Work with applicable stakeholders to ensure that continuous installation is achieved. Coordinate with:
1. OWNER or OWNER's designated representative.
2. ENGINEER.
3. Quality Assurance Inspector.
4. Other trades to avoid or minimize Work in immediate vicinity of Work in progress or completed Work.

3.2 EXAMINATION

A. CONTRACTOR shall examine and verify existing dimensions, conditions and details prior to installation of materials. CONTRACTOR shall report to OWNER, in writing, any conditions that would adversely affect the performance of the material and/or system to be installed and which cannot be put into an acceptable condition by the preparatory work specified herein.

B. Do not proceed with affected Work until concerns have been dispositioned and clear direction is provided.

C. Installation of material and/or system indicates acceptance of conditions.

3.3 WORK CONDITIONS

A. Environmental Limitations: Install materials when existing and forecast weather conditions and substrate conditions permit materials to be installed according to manufacturer's written instructions and warranty requirements.

B. Maintain adequate ventilation during preparation and placement.

3.4 PROTECTION

A. General:
   1. Protect adjacent surfaces and surrounding site.
   2. Protect prepared substrates, cracks and joints from windborne and local debris and/or contaminants.
   3. Protect finished Work from damage.
   4. Remove protective measures upon completion of Work.
   5. Restore surfaces and site to condition prior to Work, to satisfaction of OWNER and at no additional cost to OWNER.

3.5 EQUIPMENT

A. Provide equipment that is capable of injecting materials at the minimum pressures recommended by the material manufacturer.

B. Pumps used for pressure injection shall be capable of providing pressures at the injection gun or nozzle as recommended by the material manufacturer.
   1. The gun shall be fitted with a liquid filled gauge for measuring the injection pressure.
   2. Check valves shall be placed in the hoses at the proper locations to prevent backflow.

3.6 SURFACE & SITE PREPARATION

A. Cementitious:
   1. Prepare surfaces in general accordance with the manufacturer's specifications and requirements.
   2. Locate cracks and/or similar openings to be sealed.
   3. For cracks with active moisture as evident by dampness, weeping or flowing), plug, fill and/or seal to reduce and/or eliminate active moisture prior to installation of injection material. Methods include, but are not limited to:
      a. Application of hydraulic cement.
      b. Installation oakum (dry or saturated with chemical grout) or appropriate filler.
      c. Other methods as recommended by OWNER and/or ENGINEER.
   4. For cracks and joints greater than 1/4-inch (W):
      a. Install oakum, open cell foam or equivalent material to reinforce large openings during application of injection material.
   5. Mark proposed locations of injection points for review by OWNER and/or ENGINEER.
   6. Clean out cracks and openings to be sealed with compressed air to remove dust, debris, contamination, etc.
   7. Drill holes along the side of the crack and/or opening to be sealed in accordance with manufacturer requirements.
      a. Size holes to be 5/8-inch diameter unless otherwise specified by manufacturer.
      b. Drill holes at a 45-degree angle to intersect cracks midway through the substrate.
      c. Clean dust and debris from drilled holes and adjacent surfaces.
   8. Clean surfaces of substrates at material injection port and sealing locations to remove dust and debris.
   9. Install injection ports and/or packers as appropriately spaced intervals along the crack to permit adequate material coverage and verify coverage during injection.
   10. (As Required) Seal substrate surfaces to be injected to prevent release of injection material and ensure adequate pressure retention.
   11. Pump water through injection ports to verify appropriate pathway(s) have been achieved between cracks, joints and/or ports.
   12. Verify substrate moisture content meets manufacturer requirements to ensure activation of materials.

B. Soils:
   1. Prepare site in general accordance with the manufacturer's specifications and requirements.
   2. Identify and clearly mark perimeter of soils to be stabilized.
   3. Mark proposed locations of injection points with proposed depth of injection for review by OWNER and/or ENGINEER. Layout of injection points should consider:
      a. Underground utilities.
      b. Soil type, porosity and related existing conditions.
      c. Depth of soils to be stabilized.
      d. Targeted voids, depressions, etc.
      e. Intervals and procedures of installation.
      f. Application methods and equipment.
      g. Adjacent structures, equipment and related items.
   4. Drill holes for injection points:
      a. Size holes in accordance with manufacturer recommendations.

3.7 MIXING AND INSTALLATION

A. General
   1. Mixing:
      a. Refer to Manufacturer's written instructions for mixing requirements specific to each material and/or application. Unless otherwise specified, the following minimum requirements shall apply:
         1) Verify environment and substrate is suitable for mixing operations and installation. Unless otherwise specified by manufacturer:
            a) Do not allow materials to unintentionally come into direct contact with moisture.
            b) Do not install materials when temperatures are above 90-degrees (and rising).
            c) Do not install materials if substrates conditions are not favorable and/or appropriate preparation requirements have not been achieved.
         2) Verify substrates, cracks, joints, etc. have been properly moisture-conditioned.
         3) Thoroughly mix material using a low-speed drill with a mixing paddle.
            a) Introduce catalyst (if required) at manufacturer recommended consistencies.
            b) Hand mixing is not permitted.
         4) Place mixed material in appropriate device and/or storage for immediate application.
   2. Installation
      a. Cementitious:
         1) Pressure -inject materials with appropriate equipment at designated port locations
            a) Pressure of injected materials should vary based on configuration, crack/joint size, depth and other factors.
         2) Begin pressure injection at the lowest port location and continue until material is observed at an adjacent port.
            a) CONTRACTOR may continue installation from port before immediately moving to an adjacent port based on their expertise and experience.
            b) If material is not observed, drill additional holes and install additional ports.
            c) If liquid material is observed leaking from cracks or joints for more than 30 seconds, compress oakum, or another appropriate material, into the opening to aid the material's gel time as a dam.
         3) Close port and begin injection at adjacent port(s) moving upwards until all ports are filled.
         4) Following installation and material cure:
            a) Remove injection ports.
            b) Mechanically remove injection material protruding from cracks and/or joints.
            c) Ground flush any surfacers, sealers and/or other products used along the length of injection.
      b. Soils:

1) Pressure -inject materials with appropriate equipment at designated drilled (or similar) injection locations
    a) Pressure of injected materials should vary based on configuration, soil type, depth and other factors.
2) Begin pressure injection at pre-identified locations and progress in accordance with the approved installation plan and procedure.
3) Continue installation until all injection locations have been addressed.
    a) For injection requiring higher than anticipated pressure to create travel of materials, or for injection where the anticipated volume of material to be injected is lower, notify OWNER and/or ENGINEER. Identify and implement additional measures to ensure adequate stabilization of soils including, but not limited to:
        (1) Drilling of additional holes and injection of additional material at reduced spacing's.

3.8 FINAL INSPECTION

A. CONTRACTOR shall arrange for a final inspection with OWNER to determine whether Work meets the requirements of the Contract Documents. Testing includes, but is not limited to:
    1. Drilling of pilot holes to verify presence of soil stabilization material (1 per 100SF (max)).
    2. Review of material volume installed.

CHECKLIST 1: CEMENTITIOUS CHEMICAL GROUT INJECTION

Project	
Inspector	
Task	
Location	

Quality Assurance Hold points are indicated in Bold Sheet 1 of 1

Date	Initials	Task
_____	_____	**1. Required submittals have been provided to OWNER for review and have been accepted.**
_____	_____	2. Existing conditions, surfaces and related items relevant to work tasks have been examined and accepted. Deficiencies, obstructions, abnormalities and/or constraints have been communicated to OWNER and/or ENGINEER and appropriately resolved.
_____	_____	**3. Cracks and/or joints to be injected and sealed have been marked and reviewed by the OWNER, ENGINEER and/or Quality Assurance Inspector.**
_____	_____	4. **Injection layout and plan have been reviewed by the OWNER, ENGINEER and/or Quality Assurance Inspector.**
_____	_____	**5.** Product/Material manufacturer has reviewed Work, substrates and conditions. Manufacturer has verified selected material(s) is suitable for application.
_____	_____	6. OWNER property including, but not limited to, equipment, components, structures, etc. have been adequately protected.
_____	_____	**7. Active water has been mitigated, reduced and/or appropriately addressed by approved means and methods.**
_____	_____	**8. Injection port holes have been drilled at specified angle and depth for application.**
_____	_____	**9.** Overlays, crack sealer and/or related items have been applied to dam materials (as required).
_____	_____	**10.** Application equipment has been inspected and is ready for use.
_____	_____	11. Material(s) are mixed in accordance with manufacturer requirements. Required catalyst(s) concentrations have been introduces (as required).
_____	_____	**12. Material(s) are injected at specified locations in accordance with the approved plans, specifications and manufacturer requirements. Application shall be observed be OWNER, ENGINEER and/or Quality Assurance Inspector.**
_____	_____	**13. Required mockups have been performed, observed, reviewed and approved (if required).**
_____	_____	**14. OWNER, ENGINEER and/or Quality Assurance Inspector has verified installation.**
_____	_____	15. Excess materials have been removed and/or cleaned from surfaces ; overlays and/or sealers have been removed.
_____	_____	**16. Final inspection (field testing, in-service testing, etc.).**

CHECKLIST 2: SOIL CHEMICAL GROUT INJECTION

Project	
Inspector	
Task	
Location	

Quality Assurance Hold points are indicated in Bold Sheet 1 of 1

Date	Initials	Task
_____	_____	**1. Required submittals have been provided to OWNER for review and have been accepted.**
_____	_____	2. Existing conditions relevant to work tasks have been examined and accepted. Deficiencies, obstructions, abnormalities and/or constraints have been communicated to OWNER and/or ENGINEER and appropriately resolved.
_____	_____	**3. Perimeter of soils to be injected and stabilized have been marked and reviewed by the OWNER, ENGINEER and/or Quality Assurance Inspector.**
_____	_____	4. **Injection layout and plan have been reviewed by the OWNER, ENGINEER and/or Quality Assurance Inspector.**
_____	_____	**5.** Product/Material manufacturer has reviewed Work, soils and conditions. Manufacturer has verified selected material(s) is suitable for application.
_____	_____	6. OWNER property including, but not limited to, equipment, components, structures, etc. have been adequately protected.
_____	_____	**7. Injection holes have been drilled at specified location(s) and depth(s) for application.**
_____	_____	**8.** Application equipment has been inspected and is ready for use.
_____	_____	9. Material(s) are mixed in accordance with manufacturer requirements. Required catalyst(s) concentrations have been introduces (as required).
_____	_____	**10. Material(s) are injected at specified locations in accordance with the approved plans, specifications and manufacturer requirements. Application shall be observed be OWNER, ENGINEER and/or Quality Assurance Inspector.**
_____	_____	**11. Required mockups have been performed, observed, reviewed and approved (if required).**
_____	_____	**12. OWNER, ENGINEER and/or Quality Assurance Inspector has verified installation.**
_____	_____	**13. Final inspection (1 per 100 SF).**

END OF SECTION

SECTION 07900
JOINT SEALANTS AND EXPANSION JOINT SYSTEMS

PART 1 - GENERAL

1.1 SUMMARY

A. Section includes:
   1. Surface preparation, installation, and quality control requirements of sealant in control joints, construction joints, and cracks in concrete.
   2. Specification of expansion and control joint systems.

1.2 RELATED SECTIONS

A. The following are related to Work in this Section, but are specified in other Sections:
   1. Section 09900 – Protective Coatings

1.3 DEFINITIONS

A. Adhesion – The bonding of one material to another (sealant to a substrate).

B. Adhesive Failure – Failure that occurs when a sealant pulls away from the surface or substrate to which it was bonded.

C. Bond Breaker – Material such as tape or backer rod designed to prevent three-sided adhesion.

D. Backer Rod – Flexible foam used behind sealant to increase elasticity, control the thickness and configuration of the sealant and provide a bond breaker to prevent three-sided adhesion.

E. Class 12.5 Sealant – A sealant that, when tested for adhesion or cohesion under cyclic movement per ASTM C719 will withstand an increase and decrease of at least 12.5% of the joint width as measured at the time of application.

F. Class 25 Sealant – A sealant that, when tested for adhesion or cohesion under cyclic movement per ASTM C719 will withstand an increase and decrease of at least 25% of the joint width as measured at the time of application.

G. Class 35 Sealant – A sealant that, when tested for adhesion or cohesion under cyclic movement per ASTM C719 will withstand an increase and decrease of at least 35% of the joint width as measured at the time of application.

H. Class 50 Sealant – A sealant that, when tested for adhesion or cohesion under cyclic movement per ASTM C719 will withstand an increase and decrease of at least 50% of the joint width as measured at the time of application.

I. Class 100/50 Sealant – A sealant that, when tested for adhesion or cohesion under cyclic movement per ASTM C719 will withstand an increase of at least 100% of the joint width and decrease of 50% of the joint width as measured at the time of application.

J. Coefficient of Expansion – The amount a material increases and decreases in size with temperature changes.

K. Cohesion – The molecular attraction (internal strength) that holds the body of a sealant or adhesive together.

L. Cohesion Failure – Failure that occurs when the sealant fails to hold together.

M. Elastomeric – A material having the property of returning to its original shape and position.

N. Elongation – The lengthening or stretching ability of a sealant to accommodate movement.

O. Grade NS – A non-sag or gun grade sealant.

P. Grade P – A pourable of self-leveling sealant.

Q. Hardness – The ability of a sealant to resist surface penetration by a blunt probe.

R. Joint – A longitudinal or lateral opening that occurs when any two building surfaces meet. Within concrete, joints (cracks) also propagate at locations where movement and/or internal stresses occur.
   1. Static Joint – Fixed, non-moving, non-working joints not subject to extreme thermal changes.
   2. Dynamic Joint – Moving joints that experience expansion and contraction from thermal changes.

S. Modulus – Ration between stress and strain classified as low, medium and high. Low modulus material stretches more easily.

T. Primer – A material applied to joint faces to improve the adhesion of sealants.

U. Substrate – The surface(s) to which a sealant is applied and bonded to.

V. Three-Sided Adhesion – Adhesion of sealant to a substrate on three sides. In dynamic joints, subsequent movement from three sides often causes adhesive failure, cohesive failure or both.

W. Tooling – Application technique to force a material against a backing and the surfaces of a joint to provide a smooth finished look and provide better adhesion to the substrate.

X. Type M – A multi-component sealant.

Y. Type S – A single component sealant.

Z. Use A – A sealant that meets the bond requirements when tested on aluminum specimens.

AA. Use G – A sealant that meets the bond requirements when tested on glass specimens.

BB. Use I – A sealant that meets the bond requirements when tested in immersion.

CC. Use M – A sealant that meets the bond requirements when tested on mortar specimens.

DD. Use O – A sealant that meets the bond requirements when tested on substrates other than standard substrates (glass, aluminum & mortar).

EE. Use NT – A sealant designed for use in non-traffic areas.

FF. Use T – A sealant designed for use in pedestrian and vehicular traffic areas.

1.4 REFERENCE STANDARDS

A. Reference Standards (Refer to the latest edition):
   1. American Society for Testing and Materials (ASTM):
      a. ASTM C661: Standard Test Method for Indentation Hardness of Elastomeric-Type Sealant by Means of a Durometer
      b. ASTM C679: Standard Test Methods for Tack-Free Time of Elastomeric Sealants
      c. ASTM C711: Standard Test Method for Low-Temperature Flexibility and Tenacity of One-Part, Elastomeric, Solvent-Release Type Sealants
      d. ASTM C717: Standard Terminology of Building Seals and Sealants
      e. ASTM C719: Standard Test Method for Adhesion and Cohesion of Elastomeric Joint Sealants Under Cyclic Movement
      f. ASTM C732: Standard Test Method for Aging Effects of Artificial Weathering on Latex Sealants
      g. ASTM C734: Standard Test Method for Low-Temperature Flexibility of Latex Sealants After Artificial Weathering
      h. ASTM C736: Standard Test Method for Extension-Recovery and Adhesion of Latex Sealants
      i. ASTM C794: Standard Test Method for Adhesion-in-Peel of Elastomeric Joint Sealants

j. ASTM C834: Standard Specification for Latex Sealants
k. ASTM C919: Standard Practice for Use of Sealants in Acoustical Applications
l. ASTM C920: Standard Specification for Elastomeric Sealant
m. ASTM C1183: Standard Test Method for Extrusion Rate of Elastomeric Sealants
n. ASTM C1193: Standard Guide for Use of Joint Sealants
o. ASTM C1241: Standard Test Method for Volume Shrinkage of Latex Sealants During Cure
p. ASTM C1248: Standard Test Method for Staining of Porous Substrate by Joint Sealants
q. ASTM C1299: Standard Guide for Use in Selection of Liquid-Applied Sealants
r. ASTM C1330: Standard Specification for Cylindrical Sealant Backing for Use with Cold Liquid-Applied Sealants
s. ASTM C1375: Standard Guide for Substrates Used in Testing Building Seals and Sealants
t. ASTM C1382: Standard Test Method for Determining Tensile Adhesion Properties of Sealants When Used in Exterior Insulation and Finish Systems (EIFS) Joints
u. ASTM C1521: Standard Practice for Evaluating Adhesion of Installed Weatherproofing Sealant Joints
v. ASTM D70: Standard Test Method for Density of Semi-Solid Bituminous Materials (Pycnometer Method)
w. ASTM D412: Standard Test Method for Vulcanized Rubber and Thermoplastic Elastomers - Tension
x. ASTM D624: Standard Test Method for Tear Strength of Conventional Vulcanized Rubber and Thermoplastic Elastomers
y. ASTM D638: Standard Test Method for Tensile Properties of Plastics
z. ASTM D903: Standard Test Method for Peel or Stripping Strength of Adhesive Bonds
aa. ASTM D1004: Standard Test Method for Tear Resistance (Graves Tear) of Plastic Film and Sheeting
bb. ASTM D2202: Standard Test Method for Slump of Sealants
cc. ASTM D2203: Standard Test Method for Staining from Sealants
dd. ASTM D2240: Standard Test Method for Rubber Property-Durometer Hardness
ee. ASTM D3960: Standard Practice for Determining Volatile Organic Compound (VOC) Content of Paints and Related Coatings
ff. ASTM E84: Standard Test Method for Surface Burning Characteristics of Building Materials
gg. ASTM G155: Standard Practice for Operating Xenon Arc Light Apparatus for Exposure of Non-Metallic Materials

1.5 SUBMITTALS

A. CONTRACTOR shall provide the following submittals, specific to this Section, to OWNER for review and/or approval:
   1. Pre-Award Submittals: Submitted as part of the Bid Process.
      a. CONTRACTOR and Subcontractor qualifications:
         1) Include CONTRACTOR and individual certifications, licenses, work experience and related documentation.
         2) Include evidence that company has a minimum of 5-years continuous experience in application of specified materials. Submit list of at least five completed Projects of similar scope and size, including:
            a) Project Name.
            b) Owner’s Name.
            c) Owner’s Representative’s Name, Address and Contact Information.
            d) Description of Work.
            e) Sealant(s) Used.
            f) Project Manager / Supervisor.
            g) Total cost of Sealant Work.
            h) Start and Completion Date.

b. Intent to Warrant and Sample Warranty.
   1) Copy of warranty, stating obligations, remedies, limitations, and exclusions.
2. Pre-Construction Submittals: Submitted prior to Work.
   a. Product Data / Safety Data: Sealant manufacturer's literature including written instructions for evaluating, preparing and treating substrate, technical data including tested physical and performance properties, installation instructions and safety data. Include:
      1) Temperature ranges for storage and application of materials, and special cold-weather application requirements or limitations.
      2) Manufacturer's recommendations for substrate cleaner and substrate primer for specific substrate surface and conditions.
      3) Manufacturer's color card showing range of colors available for each product exposed to view.
   b. Letter from Manufacturer indicating that specific sealant products and auxiliary products are recommended for control joint and crack types and exposures on Project. Based on mockups, include specific recommendations for surface preparation and primers for Project.
   c. Quality Control Forms.
      1) To be submitted as part of Quality Control System.
   d. Product Samples.
3. During Construction: Submitted at specified intervals during construction.
   a. Quality Control Documentation (weekly or as requested).
   b. Quality Assurance Documentation.
4. Closeout Documents: Submitted upon Project completion and prior to final payment.
   a. Final Warranty.
   b. Submit a letter from the sealant manufacturer indicating that a representative portion of all major steps in the sealant work were inspected by the manufacturer and that all that work was performed in accordance with the manufacturer's recommendations and instructions.
   c. Record Documentation.
      1) Includes as-built documentation and records of work completed such as red-lines drawings, specifications, etc.
   d. Construction Photos.
   e. Quality Control Documentation.

1.6 QUALITY CONTROL AND ASSURANCE REQUIREMENTS

A. Installer Qualifications:
   1. Approved, authorized, or licensed by sealant manufacturer to install sealant and eligible to receive sealant manufacturer's warranty.
   2. Must have documented installations of specified materials in local area in use for minimum of 5 years.
      a. Employ foreman with minimum 5-years of experience as foremen on similar projects to be on-site at all times.
      b. Employ only personnel who have been trained, or approved, by the Sealant Manufacturer in writing as being qualified to perform the sealant Work covered herein.

B. Quality Control:
   1. General:
      a. Verify existing dimensions and details prior to installation of materials. Notify OWNER of conditions found to be different than those indicated in Contract Documents. OWNER will review situation and inform CONTRACTOR and Applicator of changes.
      b. Inspect all materials upon receipt to verify product and condition.
      c. Inspect to verify that specified storage conditions for materials are provided

d. Do not use or retain contaminated, outdated, or improperly stored materials. Do not use materials from previously opened containers.
e. Make available all locations and phases of the work for periodic and/or required observation and/or inspection by OWNER, OWNER's designated representative and/or Quality Assurance Inspector.
   1) The CONTRACTOR shall provide necessary access, support, ventilation, egress, safety and other means required.
f. Provide daily quality control reports to OWNER on a weekly basis, or as requested. Submit reports in a Portable Document Format (PDF). At a minimum, Quality Control Report's shall include:
   1) Project Identification.
   2) Date and Time(s).
   3) Atmospheric and Ambient Conditions.
   4) Inspector and Foreman Identification.
   5) Number of Workers On-Site.
   6) Work Area(s).
   7) Work Scope Performed.
   8) Work Progress.
   9) Product Data (Name, Lot, Exp.).
   10) Substrate Conditions.
   11) Quality Control Inspections.
   12) Quality Assurance Inspections (Internal and By Others).
   13) Other Pertinent Information.
g. The methods of construction shall be in accordance with requirements of the Contract Documents and best trade practices unless otherwise permitted by OWNER.

C. Inspection by OWNER, OWNER's designated representative or Quality Assurance Inspector does not limit the CONTRACTOR's responsibilities for inspection, quality workmanship or quality control as specified herein or as required by the Manufacturer's instructions.

D. Mockups: For each sealant material and/or system to be installed, prepare and install sealant to a representative location designated by OWNER to demonstrate aesthetic affects, quality of materials and execution.
   1. Sealant manufacturer's representative and Quality Assurance Inspector shall observe mockup and approve, in writing, preparation and installation.
   2. Quality Assurance Inspector may perform adhesion adhesion tests of sealant as part of acceptance.
   3. If Quality Assurance Inspector determines mockup does not comply with requirements, modify mockup or construct new mockup until mockup is approved. Do not proceed with Work until mockup is approved.
   4. Approved mockup will be acceptance standard for remainder of Work.
   5. Approved mockup may become part of completed Work, if appropriate.

E. Quality Assurance Testing and Inspection:
   1. Quality assurance testing and inspection will be performed by qualified Quality Assurance Inspector's to be provided by OWNER.
      a. Refer to Contract Documents for general quality assurance and testing reporting requirements.
      b. Testing and/or inspection frequency may be increased or decreased at OWNER's discretion.
   2. Field-Adhesion Testing: Quality Assurance Inspector will perform non-destructive and destructive field adhesion tests on sealant in accordance with ASTM C1521; sealant manufacturer's representative shall observe testing as requested by OWNER or CONTRACTOR.
      a. Non-Destructive Testing:
         1) Procedure:

a) Depress center of sealant bead with probing tool to depth of 50 percent of bead width; or
b) Depress sealant bead near substrate bond-line until it appears visually that sealant is about to fail in cohesive; or
c) Apply uniform pressure with roller no more than one-half sealant bead in width, to create depression that represents approximately 50 percent of sealant deflection; advance roller along centerline of sealant bead; and note anomalies in sealant performance.

2) Record anomalies in sealant performance, if failures are adhesive or cohesive, and maximum surface depression as percent of joint or crack width.
3) Perform test every 12 inches for first 10 linear feet of joint or crack; if no test failure is observed, test every 24 inches thereafter.

b. Destructive testing, Method A:
1) Cut 6-inch-long tail of sealant loose from substrate.
2) Mark tail 1 inch from adhesive bond.
3) Grasp tail 1 inch from adhesive bond and pull until tail extends to 2 times the specified movement capability of sealant. If sealant has not failed, continue pulling to failure.
4) Record elongation at failure and if failure was adhesive or cohesive.
5) Observe sealant for complete filling of joint or crack with absence of voids, and for joint or crack configuration in compliance with requirements. Record observations and sealant dimensions.
6) Perform test every 100 feet for first 1,000 linear feet of joints and cracks; if no test failure at 2 times movement capability occurs, test every 1,000 feet thereafter.

c. Test reports shall include date when sealant was installed, name of person who installed sealant, test date, test location, and whether primer was used.
d. Immediately after testing, replace failed sealant in test areas. Neatly cut out and remove failed sealant, prepare and prime surfaces, and install new sealant. Ensure that original sealant surfaces are clean and that new sealant contacts original sealant.
e. Sealant not evidencing adhesive failure from testing or noncompliance with requirements will be considered satisfactory.
f. Where Quality Assurance Inspector determines that sealant has failed adhesively from testing or does not comply with requirements, additional testing will be performed to determine extent of non-conforming sealant. Neatly cut out and remove non-conforming sealant, prepare and prime surfaces, and install new sealant. Perform field adhesion tests on new sealant. Additional testing and replacement of non-conforming sealant shall be at CONTRACTOR's expense.

F. Inspection Hold Points:
1. The Quality Assurance Inspector shall conduct hold point inspections during the sealant work. The CONTRACTOR is required to coordinate such hold points in the sealant work with OWNER or its designated representative such that inspections can be performed on a scheduled basis. CONTRACTOR shall provide OWNER a minimum 48-hour advanced notice for required quality assurance hold point inspections.
2. Refer to Checklist 1 herein for a typical sealant Quality Control/Assurance checklist. OWNER and/or their designated representative may modify the contents of Quality Control/Assurance checklists as required based on Project needs, changes, constraints, etc.

G. Identification and Resolution of Conflicts
1. It shall be the responsibility of the CONTRACTOR to notify OWNER of any conflicts, obstructions, discrepancies and similar items related to Contract Document content, specifications, instructions, field conditions, weather, etc. promptly upon discovery by means of a formally submitted Request for Information (RFI).

1.7 WARRANTY

A. CONTRACTOR & Manufacturer Joint Warranty, include:

1. Removal and replacement of sealant that does not comply with requirements; that does not remain watertight; that fails in adhesion, cohesion, or general durability; or that deteriorates in manner not clearly specified by submitted sealant manufacturer's literature as inherent quality of material for application indicated.
2. Removal and replacement of bond breaker materials.
   a. Excessive joint or crack movement caused by structural settlement or errors attributable to design or construction, resulting in stresses in sealant exceeding sealant manufacturer's written data for sealant elongation or compression.
   b. Deterioration or failure of sealant due to failure of substrate prepared according to requirements.
   c. Mechanical damage caused by individuals, tools, or other outside agents.
   d. Changes in sealant appearance caused by accumulation of dirt or other atmospheric contaminants.
3. Warranty Period: 3 years (min) from date of Project Completion.

1.8 DELIVERY, STORAGE AND HANDLING

A. Adhere to requirements herein and applicable requirements within the Contract Documents.

B. Deliver, store, and handle materials according to manufacturer's recommendations and in such manner as to prevent damage to materials and structure.

C. Deliver materials to Project site in original containers with seals unbroken, labeled with:
   1. Product name or title of material.
   2. Manufacturer's stock/batch number
   3. Date of manufacture and shelf life, or expiration date.
   4. Application and mixing instructions.
   5. Handling instructions and precautions.
   6. Hazardous material identification label

D. Keep materials dry and do not allow materials to be exposed to moisture during transportation, storage, handling, or installation. Reject and remove from Site new materials which exhibit evidence of moisture during application or which have been exposed to moisture.

E. Store materials in original, undamaged containers in a clean, dry, protected location on raised platforms with weather-protective coverings, within temperature range required by sealant manufacturer. Protect stored materials from direct sunlight. Manufacturer's standard packaging and covering are not considered adequate weather protection.

F. Limit stored materials on structures to safe loading of structure at time materials are stored, and to avoid permanent deck deflection.

G. Handle and store materials to prevent damage.

H. Conspicuously mark damaged or opened containers, expired materials and/or diluted materials and remove from site as soon as possible.

I. Dispose materials in accordance with local, state and federal laws, rules and regulations.

1.9 CLEANING

A. At end of each workday, clean site and work areas and place rubbish, empty tubes and containers, rags, and other discarded materials in appropriate containers.

B. Clean off excess sealant or sealant smears as Work progresses by methods and with cleaning materials approved in writing by sealant manufacturer. Exercise care to avoid scratching or damage to surfaces. Remedy surfaces stained, marred, or otherwise damaged during sealant Work.

C. At conclusion of Work, clean up debris and surplus materials and remove from site.

1.10 SAFETY

A. Adhere to requirements herein and applicable requirements within the Contract Documents.

B. The CONTRACTOR is required to attend a safety briefing with OWNER prior to Work.

C. The CONTRACTOR shall ensure OWNER and CONTRACTOR personnel are aware of any hazards peculiar to the jobsite.
   1. Provide and/or identify location(s) of available first aid stations, eye wash stations and pertinent safety equipment.
   2. Provide contact information of responsible personnel and emergency phone numbers.
   3. Obtain contact information for OWNER stakeholders and pertinent OWNER site personnel.
   4. Determine and communicate evacuation routes.

D. Keep all work areas clean and safe.

E. Obey all plant rules and regulations.

F. The CONTRACTOR shall conduct all work covered by this section in accordance with all pertinent OSHA regulations.

1.11 CHANGES IN WORK

A. During Work, existing conditions may be encountered which are not known or are at variance with the Contract Documents. Such conditions may interfere with sealant Work and may consist of damage or deterioration of substrate or installed materials that could jeopardize integrity or performance of the sealant system.

B. Notify OWNER of conditions that may interfere with proper execution of Work or jeopardize integrity of new sealant prior to proceeding with Work.

PART 2 - PRODUCTS

2.1 PRODUCTS AND MATERIALS

A. General:
   1. Source Limitations: Obtain sealants through one source from single manufacturer, or from sources approved by sealant manufacturer.
   2. Material Compatibility: Provide sealants, backings, and other related materials that are compatible with one another and with concrete substrates under conditions of service and application, as demonstrated by sealant manufacturer based on testing on similar projects, mockups inspection and testing for this project and field experience.
   3. Color of Exposed Sealant: Selected and approved in writing by OWNER, from sealant manufacturer's full range.
   4. Primer: Provide manufacturer's recommended primer for conditions and/or applications requiring primer.

B. Elastomeric Sealants: Comply with ASTM C920
   1. General
      a. Verify sealant compatibility with Coating System Manufacturer for use at areas to be coated.
      b. For joint and/or crack configurations exceeding 1-inch in width or less than 1/4-inch in depth, notify OWNER and/or ENGINEER for further direction.
   2. Polyurethane Sealant:
      a. HRSD System #1: ASTM C920, Type S, Grade NS, Class 35, Use A, G, M, NT, O.
         1) For use as a general purpose sealant in interior, exterior, atmospheric, submerged and/or intermittently submerged environments.
         2) For use with standard construction materials [concrete, metals, fiberglass, wood, masonry, aluminum].
         3) For use in joints and cracks not exceeding 1/2-inch (D).

4) For use in dynamic (movement) joints (Up to 35% expansion/contraction).
5) For use on substrates to be coated.
6) Not for use in chemical containments and/or submerged environments with moderate-to-severe chemical exposure.
a) Products:
(1) Sikaflex-1a; Sika Corporation.
(2) Sikaflex-1c SL; Sika Corporation.
(3) MasterSeal NP 1; BASF Corporation
(4) Eucolastic 1NS; Euclid Chemical Company.
(5) Approved Equal.

b. HRSD System #2: ASTM C920, Type M, Grade NS/P, Class 25 or 50, Use A, G, I, M, NT, O.
1) For use as a general purpose sealant in interior, exterior, atmospheric, submerged and/or intermittently submerged environments.
2) For use with standard construction materials [concrete, metals, fiberglass, wood, masonry, aluminum].
3) For primary use in larger joint configurations and for submerged and intermittently submerged environments.
4) For use in dynamic (movement) joints.
5) For use on substrates to be coated.
6) For use in environments with mild-to-moderate chemical exposure.
a) Products:
(1) DynaTrol II; Pecora Corporation.
(2) Sikaflex-2c NS; Sika Corporation.
(3) MasterSeal NP 2 with MasterSeal P 173; BASF Corporation
(4) Approved Equal.

c. HRSD System #3: ASTM C920, Type M, Grade P, Class 25, Use T.
1) For primary use in horizontal applications with exposure to vehicular and/or pedestrian traffic.
a) Products:
(1) DynaTrol II-SG; Pecora Corporation.
(2) Sikaflex-2c SL; Sika Corporation.
(3) MasterSeal SL 2; BASF Corporation
(4) Approved Equal.

3. Polysulfide Sealant: ASTM C920, Type M, Grade NS or P, Class 25, Use A, G, M, NT.
a. HRSD System #4:
1) For use with standard construction materials [concrete, metals, fiberglass, wood, masonry, aluminum].
2) For primary use in atmospheric, submerged and/or intermittently submerged environments exposed to chemicals, fuels, etc.
3) For use on substrates to be coated.
a) Products:
(1) Synthacalk GC2+ NS; Pecora Corporation.
(2) Tammsflex NS; Euclid Chemical Corporation.
(3) Tammsflex SL; Euclid Chemical Corporation.
(4) Approved Equal.

4. Hybrid Polyurethane Sealant (Silyl-Terminated Polyether): ASTM C920, Type S, Grade NS, Class 100/50, Use A, G, M, NT, O.
a. HRSD System #5:
1) For use with standard construction materials [concrete, metals, fiberglass, wood, masonry, aluminum].
2) For use where high movement (flexibility) is required.
3) For use with vertical applications such as concrete panel and wall systems, window and door frames, reglets, flashing, facades, etc.
4) For use in joints and cracks no greater than 1-inch (W).

5) For use in above-grade atmospheric environments exposed to weathering.
6) For use on substrates to be coated.
7) Not for use in submerged and intermittently submerged environments and/or environments with chemical exposure.
a) Products:
(1) Sikaflex -15 LM; Sika Corporation.
(2) MasterSeal NP 150; BASF Corporation.
(3) Approved Equal.

5. Silicone Sealant: ASTM C920, Type S, Grade NS, Class 100/50, Use A, G, M, NT, O.
a. HRSD System #6:
1) For use with standard construction materials [concrete, metals, fiberglass, wood, masonry, aluminum].
2) For primary use in exterior vertical non-structural glazing applications such as building envelopes, concrete panel and wall systems, window and door frames, reglets, flashing, facades, etc.
3) For use where high movement (flexibility) is required.
4) For use in above-grade atmospheric environments exposed to weathering.
5) Not for use where surfaces will be coated.
6) Not for use in interior, submerged and intermittently submerged environments, environments with chemical exposure, structural glazing applications, below-grade environments, confined spaces, wet- or frost-laden environments and/or with building materials that outgas or bleen oils, plasticizers or solvents.
a) Products:
(1) Sikasil WS-290; Sika Corporation.
(2) Dowsil 790 Silicone Building Sealant; The DOW Chemical Company.
(3) Spectrem 1; Tremco Incorporated.
(4) Approved Equal.

6. Acrylic Latex: Comply with ASTM C834.
a. HRSD System #7:
1) General purpose for use with most substrates found in interior and exterior applications.
2) For primary use over substrates such as vinyl, aluminum, wood, porcelain, etc. in interior and/or controlled environments with minimal movement characteristics.
3) For use on substrates to be coated.
4) Not for use in industrial environments.
a) Products:
(1) DAP Alex Plus; DAP Inc.
(2) Tremflex 834; Tremco Incorporated.
(3) AC-20 +Silicone; Pecora Corporation.
(4) Approved Equal.

7. Auxiliary Materials:
a. General: Sealant-backer materials, primers, surface cleaners, masking tape, and other materials recommended by sealant manufacturer, that are non-staining and compatible with substrate.
b. Backer materials: Polyethylene, closed-cell backer-rod, or as recommended by sealant manufacturer.

C. Expansion and Control Joint Systems
1. General:
a. Verify joint system compatibility with Coating System Manufacturer (CSM) for use at areas to be coated.
2. Flexible Polyolefin Rubber Sealant System:
a. HRSD System #8:
1) For use with standard construction materials [concrete, metals, masonry]
2) For use in crack and joint widths up to 4-inches, unless noted otherwise.

3) For use in static and movement joints.
4) For use in submerged, intermittently submerged and atmospheric environments.
5) May be used in conjunction with elastomeric joint sealant systems.
6) For long-term use with exposure to water, lime, seawater, sewage and bitumen.
7) For short-term use with exposure to light fuel oil, diesel, diluted alkali, diluted mineral acids, ethanol and methanol.
   a) Products:
      (1) Sikadur Combiflex SG System by Sika Corporation.
      (2) Approved Equal.

3. Submersible Joint Systems for Limited Chemical Exposure: Cellular Polyurethane Foam with Impregnated Hydrophobic 100% Acrylic Coated with Chemically Resistant Silicone; ± 25% Movement.
   a. HRSD System #9:
      1) For use with standard construction materials [concrete, metals, masonry, aluminum]
      2) For use in joint widths between 1-inch and 4-inches.
      3) For primary use in submerged and intermittently submerged environments.
      4) May be used in non-submerged environments as a continuation from the submerged system.
      5) For use in submerged environment with chloride levels less than 5 ppm.
      6) Not for use in areas subjected to high chemical concentrations and/or potential chemical exposure.
         a) Products:
            (1) Submerseal by Emseal LLC.
               (a) Allowable depth and hydrostatic head pressures:
                - 1-inch joint; 2-1/8 inches (D); 30 ft. head
                - 2-inch joint; 3-inches (D); 20 ft. head
                - 3-inch joint; 3-1/2 inches (D); 15 ft. head
                - 4-inch joint; 4-3/4 inches (D); 10 ft. head
               (b) Approved Equal.

4. Submersible Joint Systems for Chemical Exposure: Precompressed Silicone, or Polysulfide, and Impregnated Foam Hybrid Installed into Field-Applied Epoxy Adhesive; ± 25% Movement.
   a. HRSD System #10:
      1) For use with standard construction materials [concrete, metals, masonry, aluminum]
      2) For use in joint widths between 1-inch and 4-inches.
      3) For use in submerged, intermittently submerged and non-submerged environments.
      4) For use in areas subjected to high chemical concentrations and/or potential chemical exposure.
         a) Products:
            (1) Chemseal by Emseal LLC.
               (a) Maximum hydrostatic head pressure = 5 ft.
               (b) Joint width (W) to depth (D) ratios:
                - 1-inch (W) = 2-inch (D).
                - 1-1/2 inch (W) = 2-3/8 (D).
                - 2-inch (W) = 2-1/2 inch (D).
                - 2-1/2 inch (W) = 2-3/4 inch (D).
                - 3-inch (W) = 2-3/4 inch (D).
                - 4-inch (W) = 3-1/2 inch (D).
                - Refer to manufacturer's current product data sheets for additional sizes and to validate joint sizing requirements.
            (2) Approved Equal.

PART 3 - EXECUTION

3.1 GENERAL

A. Coordinate Work with applicable stakeholders to ensure that continuous, watertight, sealant installation is achieved. Coordinate with:
   1. OWNER or OWNER's designated representative.
   2. ENGINEER.
   3. Quality Assurance Inspector.
   4. Other trades to ensure that Work done by other trades is complete and ready to receive sealant.
   5. Other trades to avoid or minimize Work in immediate vicinity of sealant Work in progress or completed Work.

3.2 EXAMINATION

A. CONTRACTOR shall examine and verify existing dimensions, conditions and details prior to installation of materials. CONTRACTOR shall report to OWNER, in writing, any conditions that would adversely affect the appearance or performance of the sealant system to be installed and which cannot be put into an acceptable condition by the preparatory work specified herein.
   1. Verify dimensions of joints at the project site by field measurement so that proper sealant profiles will be accurately maintained.
   2. Verify that areas and conditions under which Work is to be performed permit proper and timely completion of Work.

B. Do not proceed with affected Work until concerns have been dispositioned and clear direction is provided.

C. Installation of sealant system indicates acceptance of surfaces and conditions.

3.3 WORK CONDITIONS

A. Environmental Limitations: Install sealant when existing and forecast weather conditions permit sealant to be installed according to sealant manufacturer's written instructions and warranty requirements.
   1. Do not install sealant when ambient or substrate temperature is below 40 degrees F or is expected to fall below 40 degrees F within 12 hours of installation unless otherwise permitted by manufacturer.
   2. Do not proceed with installation during inclement weather except for temporary work necessary to protect structure and installed materials. Remove temporary work and Work that becomes damaged by moisture.

B. Maintain adequate ventilation during preparation and placement.

C. Newly placed concrete surfaces shall be cured as recommended by sealant manufacturer prior to sealant application, unless otherwise approved by OWNER and/or OWNER's designated representative.

3.4 PROTECTION

A. General:
   1. Protect adjacent surfaces and surrounding site from staining, damage, or debris from sealant Work.
      a. Mask off surfaces (as required).
   2. Protect prepared cracks and joints from windborne and local debris and/or contaminants.
   3. Protect fresh sealants from windborne and local debris, liquids and contaminants.
   4. Protect finished Work from damage.
   5. As necessary, prevent access to Work areas or provide "Wet Sealant" signs to protect newly sealed cracks and joints.
   6. Remove masking and other protective measures upon completion of Work.

7. Restore surfaces and site to condition prior to sealant Work, to satisfaction of OWNER and at no additional cost to OWNER.

3.5 SURFACE PREPARATION

A. General:
   1. For premanufactured sealant joint systems (HRSD System #8, #9 and #10), refer to Manufacturer's written instructions for surface preparation requirements.
   2. For elastomeric sealants, refer to Manufacturer's written requirements and instructions below for surface preparation requirements.

B. Prepare surfaces and install sealant per sealant manufacturer's written recommendations and approved mockup procedures.

C. Notify sealant manufacturer and/or OWNER upon discovery of damaged or deteriorated concrete surfaces that may inhibit proper installation of sealant system for further direction prior to installation.

D. Remove existing sealant, backer rod and other foreign material from joints and cracks.

E. Rout joints and cracks to square or rectangular cross-section satisfying width (W) and depth (D) dimensions shown in Figure 1 *{Engineer to Specify}*.

F. Clean substrate immediately before installing sealant, to comply with sealant manufacturer's written instructions.
   1. Clean by wire brushing, grinding, blast-cleaning, mechanical-abrading, or combination of methods to produce clean, sound substrate capable of developing optimum bond with sealant.
   2. Remove laitance and form-release agents from joint and crack surfaces.
   3. Remove foreign material that could interfere with adhesion of sealant, including dirt, dust, existing sealant, oil, grease, and surface coatings.
   4. Provide dry substrate; prevent wetting of substrate prior to sealant installation.
   5. Remove loose particles remaining after cleaning operations by vacuuming or blowing out joints and cracks with oil-free, compressed air.

G. Install masking tape on adjacent surfaces to prevent permanent staining or damage due to contact with sealant or cleaning methods to remove sealant smears. Install masking tape on sides of joints and cracks where sealant will be recessed. Remove tape immediately after tooling sealant, without disturbing sealant.

3.6 INSTALLATION

A. General:
   1. For premanufactured sealant joint systems (HRSD System #8, #9 and #10), refer to Manufacturer's written instructions for installation requirements.
   2. For elastomeric sealants, refer to Manufacturer's written requirements and instructions below for installation requirements.

B. Prime substrate where recommended by sealant manufacturer.
   1. Apply primer per sealant manufacturer's written instructions.
   2. Confine primer to areas of sealant bond; do not allow spillage or migration onto adjoining surfaces.
   3. Limit priming to areas that will be covered with sealant in same day. Unless recommended otherwise by sealant manufacturer, re-prime areas exposed for more than 24 hours.

C. Install sealant in routed and un-routed cracks to completely fill crack configuration.

D. Install backer rod in conventional joints and routed cracks greater than 1/2-inch (W).
   1. Backer rod shall be sized approximately 25% larger than joint/crack width, but not less than 10% larger than the smallest width along the joint/crack.
   2. As required, utilize various backer rod sizes for joints and cracks with varying widths.

3. The use of multiple backer rods to fill joint/crack widths at any point along the joint/crack is not permitted.

E. Install sealant in conventioned joints and routed cracks greater than 1/2-inch (W) to produce uniform, cross-sectional shape and depth; to directly contact and fully wet joint or crack sides; and to completely fill recesses in joint or crack configuration up to the backer rod.
   1. Mix multi-component sealants per manufacturer's written instructions.
   2. For non-sag sealants:
      a. Install sealant flush with surface.
      b. Immediately after sealant application and before skinning or curing begins, tool joint or crack with slightly concave surface, compressing sealant into joint or crack to form smooth, uniform sealant bead; to eliminate air pockets; and to ensure contact and adhesion of sealant with sides of joint or crack. Do not use tooling agent.
   3. For pourable self-leveling sealants on horizontal surfaces:
      a. Install sealant slightly below the surface.
      b. Immediately after sealant application and before skinning or curing begins, lightly tool joint or crack, compressing sealant into joint or crack to form smooth, uniform sealant bead; to eliminate air pockets; and to ensure contact and adhesion of sealant with sides of joint or crack. Do not use tooling agent.
   4. Remove excess sealant from surfaces adjacent to joints and cracks.

3.7 FINAL INSPECTION

A. CONTRACTOR shall arrange for a final inspection with OWNER to determine whether sealant Work meets the requirements of the Contract Documents.

CHECKLIST 1: SEALANT INSTALLATION

Project	
Inspector	
Task	
Location	

Quality Assurance Hold points are indicated in Bold Sheet 1 of 1

Date	Initials	Task
_____	_____	**1. Required submittals have been provided to OWNER for review and have been accepted.**
_____	_____	2. Existing conditions, surfaces and related items relevant to work tasks have been examined and accepted. Deficiencies, obstructions, abnormalities and/or constraints have been communicated to OWNER and appropriately resolved.
_____	_____	**3. Cracks and/or joints to be sealed have been marked and reviewed by Quality Assurance Inspector.**
_____	_____	4. Sealant Manufacturer has reviewed substrates, environmental and operating conditions. Manufacturer has verified selected sealant is suitable for application.
_____	_____	5. OWNER property including, but not limited to, equipment, components, structures, etc. have been adequately protected.
_____	_____	**6. Required mockups have been applied, reviewed, and approved.**
_____	_____	7. Cracks and/or joints have been routed, prepared and cleaned with adjacent surfaces masked as specified in the Contract Documents and per Sealant Manufacturer requirements. Verify product to be applied will accommodate any changes to anticipated joint configuration.
_____	_____	**8. Quality Assurance Inspector has verified crack and/or joint preparation and configuration meets requirements as specified in the Contract Documents and per the Sealant Manufacturer.**
_____	_____	9. Install primer as specified in the Contract Documents and per the Sealant Manufacturer's requirements.
_____	_____	10. Install backer rod or bond breakers as specified in the Contract Documents and per the Sealant Manufacturer's requirements.
_____	_____	**11. Quality Assurance Inspector has verified backer rod and primer installation meets requirements as specified in the Contract Documents and per the Sealant Manufacturer.**
_____	_____	**12. Batch information, shelf life, storage conditions and related items for materials to be applied have been reviewed by Quality Assurance Inspector.**
_____	_____	13. Mix sealant material in accordance with the Contract Documents and Manufacturer requirements.
_____	_____	14. Apply sealant material in accordance with the Contract Documents and Manufacturer requirements. Ensure sealant is tooled with appropriate spatula(s) or tools. No hand tooling is permitted.
_____	_____	**15. Quality Assurance Inspector has reviewed application and performed requisite number of adhesion tests (Destructive / Non-Destructive). Sealant has been re-applied at destructive test locations.**

END OF SECTION

SECTION 09900
PROTECTIVE COATINGS

PART 1 - GENERAL

1.1 SUMMARY

A. Section includes:
   1. Examination, preparation and application requirements for protective coatings applied over various substrates, components, elements, etc.
   2. Material specifications for coating systems and related materials.
   3. General requirements for material storage handling, mixing, disposal and related items.

1.2 RELATED SECTIONS

A. Following Work items are related to Work in this Specification, but are specified in other Specifications:
   1. Section 07900 – Joint Sealant and Expansion Joint Systems

1.3 DEFINITIONS & ABBREVIATIONS

A. Abrasive – Material used for blast cleaning such as sand, shot or grit.

B. Abrasive Blast Cleaning – Surface preparation of substrates by abrasive propelled at high speed.

C. Applicator – CONTRACTOR and/or individual applying the coating system.

D. Bug Holes – Small cavities resulting from entrapment of air bubbles in the surface of formed concrete during placement and compaction.

E. Coating System Manufacturer (CSM) – The approved coating system manufacturer(s) for materials and/or systems to be installed.

F. Dew Point – Temperature of a given air/water vapor mixture at which condensation starts.

G. Dry Film Thickness (DFT) – Thickness of cured coating film.

H. Drying Time – Time interval between application and curing of material.

I. Feather Edging – Reducing the thickness along the edge of a material.

J. Field Coat – The application, or completion of application, of the coating system after installation of the surface at the site of work.

K. Hold Point – A mandatory verification point requiring approval.

L. Holiday – A discontinuity, skip or void in a coating or coating system film that exposes the substrate.

M. Honeycomb – Segregated condition of hardened concrete generally resulting from poor consolidation of concrete mixtures.

N. Hydroblast – High pressure water jetting that may be utilized to clean and/or prepare substrates.

O. Incompatibility – Inability of a coating to perform well over existing substrates or over another coating because of bleeding, poor bonding or lifting.

P. Immersion – A service condition in which the substrate to be coated is below the waterline or submerged in water, wastewater or liquid materials at least intermittently.

Q. Laitance – A layer of weak, non-durable concrete containing cement fines.

R. Mil – A unit of measure equal to 0.001 inch.

S. Overspray – Dry spray that failed to strike the intended surface.

T. Pinhole – A small diameter discontinuity in a coating or coating system film.

U. Pot Life – Time interval after mixing of components during which the coating can be satisfactorily applied.

V. Quality Assurance Inspector – Certified and/or qualified individual(s) responsible for inspecting and/or testing Work such as conditions, materials, installations, applications, etc. to verify Work is performed in accordance with applicable specifications and requirements.

W. Surfacer (Resurfacer / Filler) Material – A layer of cementitious and/or resin-base material used to fill or restore surface continuity to worn, or damaged, concrete surfaces.

X. Saturated Surface Dry (SSD) – Concrete surface condition where the surface is saturated, or damp, without the presence of standing water.

Y. Shelf Life – Maximum storage time for which a material may be stored without losing its usefulness.

Z. Shop Coat – One or more coats applied in a shop or plant prior to shipment to the site of the work, where the field or finishing coat(s) is applied.

AA. Spreading (Coverage) Rate – Area covered by a unit volume of coating material at a specific thickness.

BB. Stripe Coat – A separate application of coating material applied by brush to areas where coating thickness and coverage is difficult to achieve and/or where additional protection is required such as edges, welds, pits, nuts, bolts, washers, etc.

CC. Tie-Coat – An intermediate coat used to bond different types of coatings. Coatings used to improve the adhesion of a succeeding coat.

DD. Touch-Up Coating – The application of coated areas of coated surfaces to repair marks, scratches and areas where the coating has been damaged or deteriorated to restore the coating film to an unbroken condition.

EE. Volatile Organic Compound (VOC) – The portion of the coating that is a compound of carbon, is photochemically reactive, and evaporates during drying or curing.

FF. Wet Film Thickness (WFT) – The coating films thickness immediately following application.

1.4 REFERENCE STANDARDS

A. Reference Standards (Refer to the latest edition):
   1. American National Standards Institute (ANSI):
      a. ANSI/ASC 29.4: Abrasive Blasting Operations – Ventilation and Safe Practice
      b. ANSI/NSF 61: Drinking Water System Components Health Effects
      c. ANSI B74.18: Grading of Certain Abrasive Grain on Coated Abrasive Material
      d. ASTM D16: Standard Terminology for Paint, Related Coatings, Materials, and Applications
   2. American Society for Testing and Materials (ASTM):
      a. ASTM C1193: Standard Guide for Use of Joint Sealants
      b. ASTM D16: Standard Terminology for Paint, Related Coatings, Materials, and Applications
      c. ASTM D610: Standard Test Method for Evaluating Degree of Rusting on Painted Steel Surfaces
      d. ASTM D2200 (SSPC VIS1): Pictorial Surface Preparation Standards for Painting Steel Surfaces
      e. ASTM D3960: Standard Practice for Determining Volatile Organic Compound (VOC) Content of Paints and Related Coatings
      f. ASTM D4227: Standard Practice for Qualification of Coating Applicators for Concrete

g. ASTM D4258: Standard Practice for Surface Cleaning Concrete for Coatings
h. ASTM D4259: Standard Practice for Abrading Concrete
i. ASTM D4262: Standard Test Method for pH of Chemically Cleaned or Etched Concrete Surfaces
j. ASTM D4263: Standard Test Method for Indicating Moisture in Concrete by the Plastic Sheet Method
k. ASTM D4414: Standard Practice for Measurement of Wet Film Thickness by Notch Gages
l. ASTM D4417: Standard Test Methods for Field Measurement of Surface Profile of Blast Cleaned Steel
m. ASTM D4541: Standard Test Methods for Pull-Off Strength of Coatings On Metal Substrates Using Portable Adhesion Testers
n. ASTM D4787: Standard Practice for Continuity Verification of Liquid or Sheet Linings Applied to Concrete Substrates
o. ASTM D5043: Standard Practice for Field Identification of Coatings
p. ASTM D5162: Standard Practice for Discontinuity (Holiday) Testing of Nonconductive Protective Coating on Metallic Substrates
q. ASTM D5367: Standard Practice for Evaluating Coatings Applied over Surfaces Treated with Inhibitors Used to Prevent Flash Rusting of Steel when Water or Water/Abrasive Blasted
r. ASTM D6132: Standard Test Method for Nondestructive Measurement of Dry Film Thickness of Applied Organic Coatings Using an Ultrasonic Gage
s. ASTM D6237: Standard Guide for Painting Inspectors (Concrete and Masonry Substrates)
t. ASTM D7088: Resistance to Hydrostatic Pressure for Coatings Used in Below Grade Applications Applied to Masonry
u. ASTM D7234: Standard Test Method for Pull Off Adhesion Strength of Coatings on Concrete Using Portable Pull Off Adhesion Testers
v. ASTM E337: Standard Test Method for Measuring Humidity With a Psychrometer
w. ASTM F1869: Standard Test Method for Measuring Moisture Vapor Emission Rate of Concrete Subfloor Using Anhydrous Calcium Chloride

3. International Concrete Repair Institute (ICRI):
   a. ICRI Technical Guideline No. 03732: Selecting and Specifying Concrete Surface Preparation for Sealers, Coatings, and Polymer Overlays
4. National Association of Corrosion Engineers (NACE):
   a. NACE Publication 6D-163: A Manual for Painter Safety
   b. NACE Publication 6F-163: Surface Preparation of Steel or Concrete Tank/Interiors
   c. NACE Publication 6G-164 A: Surface Preparation Abrasives for Industrial Maintenance Painting
   d. NACE Standards: January 1988 Edition of the National Association of Corrosion Engineers, TPC.
   e. NACE SP0188: Standard Practice – Discontinuity (Holiday) Testing of New Protective Coatings on Conductive Substrates
   f. NACE SP0288: Standard Recommended Practice, Inspection of Linings on Steel and Concrete
   g. NACE SP0892: Standard Recommended Practice, Linings Over Concrete in Immersion Service
   h. NACE Publication TPC2: Coatings and Linings for Immersion Service
   i. NACE SP0178: Design, Fabrication, and Surface Finish Practices for Tanks and Vessels to Be Lined for Immersion Service
5. National Association of Pipe Fabricators (NAPF):
   a. NAPF 500-03: Surface Preparation Standard for Ductile Iron Pipe and Fittings in Exposed Locations Receiving Special External Coatings and/or Special Internal Linings
   b. NAPF 500-03-04: Abrasive Blast Cleaning for Ductile Iron Pipe
   c. NAPF 500-03-05: Abrasive Blast Cleaning for Cast Ductile Iron Fittings

6. Occupational Safety and Health Administration (OSHA):
    a. OSHA 1910.144: Safety Color Code for Marking Physical Hazards
    b. OSHA 1915.35: Standards – 29CFR - Painting
7. Painting and Decorating Contractors of America (PDCA):
    a. PDCA P1: Touch-Up Painting and Damage Repair: Financial Responsibility and Definition of a Properly Painted Surface
8. Society for Protective Coating (SSPC):
    a. SSPC Paint Application Specification No. 1
    b. SSPC AB 1: Mineral and Slag Abrasives
    c. SSPC PA 1: Shop, Field, and Maintenance Painting of Steel
    d. SSPC PA 2: Measurement of Dry Coating Thickness with Magnetic Gages
    e. SSPC PA 9: Measurement of Dry Coating Thickness on Cementitious Substrates Using Ultrasonic Gages
    f. SSPC PA Guide 1: Guide for Illumination of Industrial Painting Project
    g. SSPC PA Guide 3: A Guide to Safety in Paint Application
    h. SSPC PA Guide 6: Guide for Containing Debris Generated During Paint Removal Operations
    i. SSPC PA Guide 11: Guide for Coating Concrete
    j. SSPC SP1: Solvent Cleaning
    k. SSPC SP2: Hand Tool Cleaning
    l. SSPC SP3: Power Tool Cleaning
    m. SSPC SP5: White Metal Blast Cleaning
    n. SSPC SP6: Commercial Blast Cleaning
    o. SSPC SP7: Brush-Off Blast Cleaning
    p. SSPC SP 10: Near-White Blast Cleaning
    q. SSPC SP11: Power Tool Cleaning to Bare Metal
    r. SSPC SP12: Surface Preparation and Cleaning of Steel and Other Hard Materials by High and Ultra-High Pressure Water Jetting Prior to Recoating
    s. SSPC SP13: Surface Preparation of Concrete
    t. SSPC TR2: Wet Abrasive Blast Cleaning
    u. SSPC TU-3: Overcoating
    v. SSPC Guide 15: Field Methods for Retrieval and Analysis of Soluble Salts on Steel and Other Nonporous Substrates
    w. SSPC V2: Systems and Specifications: Steel Structures Painting Manual, Volume 2
    x. SSPC VIS 1: Visual Standard for Abrasive Blast Cleaned Steel
    y. SSPC VIS 3: Visual Standard for Power and Hand – Tool Cleaned Steel
    z. SSPC VIS 4: Visual Standards (Water jetting)
    aa. SSPC VIS 5: Visual Standards (Wet Abrasive Blast Cleaning)
9. Water Pollution Control Federation (WPCF):
    a. WPCF Manual of Practice No. 17: Paints and Protective Coatings for Wastewater Treatment Facilities. Guide and Paint Application Specifications

1.5 SUBMITTALS

A. CONTRACTOR shall provide the following submittals, specific to this Section, to OWNER for review and/or approval:
    1. Pre-Award Submittals: Submitted as part of Bid
        a. CONTRACTOR and subcontractor qualifications:
            1) Include CONTRACTOR and individual certifications, licenses, work experience and related documentation.
            2) Include evidence that company has a minimum of 5-years continuous experience in application of specified materials. Submit list of at least five completed Projects of similar scope and size, including:
                a) Project Name.
                b) Owner’s Name.
                c) Owner’s Representative’s Name, Address and Contact Information.

d) Description of Work.
e) Coatings Used.
f) Project Manager / Supervisor.
g) Total cost of Coating Work.
h) Start and Completion Date (Projected/Actual).

b. Intent to Warrant(s).
c. Letter and/or certifications from CSM(s) specifying that the CONTRACTOR and/or subcontractor are an approved applicator of their materials.

2. Pre-Construction Submittals: Submitted prior to Work.
   a. Product Data / Safety Data Sheets of all products and materials to reside, or be used, on-site. At a minimum, data sheets should include:
      1) Performance Criteria.
      2) Surface Preparation Requirements.
      3) Detailing Requirements (Terminations, Transitions, Etc.).
      4) Storage, Mixing and Application Instructions.
      5) Thinning Instructions and Requirements.
      6) VOC Data.
      7) Safety Data and Requirements.
   b. Letter from Coating System Manufacturer (CSM) indicating that material(s) are appropriate for the specified application.
      1) Include CSM permitted cleaning and thinner solutions (if applicable)
      2) Include any additional CSM permissions in conflict with requirements herein and/or not indicated on CSM's data sheets and/or instructions.
   c. Quality Control Forms:
      1) To be submitted as part of Quality Control System
      2) Include inspections, hold points, testing, etc.
   d. Product Samples: 5" x 7" (min) Samples for each color and material to be applied, with texture to simulate actual conditions, on representative samples of actual substrate. Include:
      1) Color samples.
      2) Stepped and cut samples defining each separate coat, including primers.
3. During Construction: Submitted at specified intervals during construction.
   a. Quality Control Documentation (weekly or as requested).
   b. Quality Assurance Documentation performed by CONTRACTOR.
4. Closeout Documents: Submitted upon Project completion and prior to final payment.
   a. Submit a letter from the CSM indicating that a representative portion of all major steps in the coating Work were inspected by the CSM and that all that work was performed in accordance with the CSM's recommendations and instructions.
   b. Record Documentation
      1) Provide as-built documentation and records of work completed including red-lined drawings, specifications, etc. indicating work performed, materials, dimensions, locations, etc.
   c. Construction Photos (electronic).
   d. Quality Control Documentation.
   e. Warranty(s).

1.6 QUALITY CONTROL AND ASSURANCE REQUIREMENTS

A. Qualifications: CONTRACTOR and Subcontractor's performing coating activities shall satisfy the following qualifications and requirements at a minimum:
   1. Qualified and Certified in accordance with requirements as specified herein this specification.CSM Qualified and/or certified applicator.
   2. At least 5-years of continuous experience in the removal, preparation and application of specified, or equivalent, coating materials.
      a. Employ site superintendent and/or foreman with minimum 5-years of experience as foremen on similar projects to be on-site at all times.

b. Employ only personnel who have been trained, or approved, by the CSM in writing as being qualified to perform the coating system work covered herein.

B. Quality Control:
1. General: The following identifies general quality control responsibilities for the CONTRACTOR performing coating Work. Refer to sections herein and the Contract Documents for additional quality control requirements:
   a. Verify existing dimensions and details prior to substrate preparation and installation of materials. Notify OWNER of conditions found to be different than those indicated in Contract Documents. OWNER will review situation and inform CONTRACTOR of recommended changes.
   b. Ensure inspection tools and/or testing equipment are calibrated prior to use.
   c. Do not use or retain contaminated, outdated, or diluted materials for coating. Do not use materials from previously opened containers.
   d. Use only products of the approved CSM(s) in accordance with the Contract Documents. Provide the same products for repairs as for original coating work, unless otherwise specified and/or approved by OWNER.
   e. Inspection by Quality Assurance Inspector(s) does not limit the CONTRACTOR's responsibilities for inspection, quality workmanship. Material compatibility and/or quality control as specified herein or as required by the CSM(s) instructions.
      1) Make available all locations and phases of the work for periodic and/or required observation and/or inspection by OWNER, OWNER'S designated representative and/or Quality Assurance Inspector.
      2) Provide necessary access, support, ventilation, egress, safety and other means required to perform and/or validate Work.
   f. Provide daily quality control reports to OWNER on a weekly basis, or as otherwise requested by OWNER. Submit reports in Portable Document Format (PDF). At a minimum, quality control reports shall include:
      1) Project Identification.
      2) Date and Time(s).
      3) Atmospheric and Ambient Conditions.
      4) Inspector and Foreman Identification.
      5) Number of Workers On-Site.
      6) Work Area(s).
      7) Work Scope Performed.
      8) Work Progress.
      9) Quality Control Inspections.
         a) Material(s), Batch No(s).
         b) Location(s)
      10) Quality Assurance Inspections (Internal and By Others).
      11) Other Pertinent Information.
   g. The methods of construction shall be in accordance with requirements of the Contract Documents and best trade practices unless otherwise permitted by OWNER.

C. Mockups: For each material and/or system to be installed, prepare surface and apply coating system to a representative location designated by OWNER to demonstrate aesthetic affects and quality of materials and execution. Leave portion of prepared surface and each coating layer exposed to view. Adhere to recognized hold points for review by Quality Assurance Inspector.
1. CSM and Quality Assurance Inspector shall observe mockup Work and approve, in writing, applicable hold points and final installation.
2. Quality Assurance Inspector may perform field adhesion tests of coatings as part of acceptance.
3. If Quality Assurance Inspector determines mockup does not comply with requirements, modify mockup or construct new mockup until mockup is approved. Do not proceed with Work until mockup is approved.
4. Approved mockup will be the acceptance standard for remainder of Work.

5. Approved mockup may become part of completed Work, if appropriate.

D. Quality Assurance Testing and Inspection:
   1. Quality Assurance Inspections are to be performed at critical steps throughout the Work process. Unless indicated otherwise by OWNER, the Quality Assurance Inspector shall perform inspections.
      a. Refer to Table 1 herein for typical quality assurance testing and inspection requirements.
         1) Specific quality assurance inspection and testing requirements shall be determined based on the specific application. CONTRACTOR shall include applicable quality assurance inspection and testing requirements and hold points in their quality control system. CONTRACTOR shall coordinate with OWNER and/or OWNER's Quality Assurance Inspector as required to verify applicable requirements.
      b. Refer to Checklist's 1 and 2 herein for typical Quality Control/Assurance requirements and inspection activities with representative hold points. Checklist may be modified based on specific application and/or scope requirements.
         1) Hold Points are indicated in **bold** and represent required quality assurance inspection and/or testing. Do not proceed with Work that may make hold point inspections difficult or impossible to perform until inspection has been completed and deficiencies corrected.
         2) The CONTRACTOR is required to coordinate hold points with OWNER or its designated representative such that inspections and testing can be performed on a scheduled basis. CONTRACTOR shall provide OWNER and/or Quality Assurance Inspector a minimum 48-hour advanced notice for required quality assurance hold point inspections and testing.
      c. CONTRACTOR shall reapply coating in areas disturbed by inspection and/or testing at no cost to OWNER.
      d. If inspected Work is unacceptable, OWNER and/or Quality Assurance Inspector will determine remedy. CONTRACTOR shall remove and replace unacceptable coating or perform other remedial actions at no cost to OWNER. CONTRACTOR may, at own expense, perform additional measurements and testing to determine limits of areas with unacceptable coating.
   2. Quality Assurance Inspection and Testing to be performed by CONTRACTOR (if required as part of the Bid Process) shall adhere to requirements as specified herein and in the Contract Documents.
      a. CONTRACTOR Quality Assurance Inspectors for all aspects of coating Work shall be NACE level III certified.
      b. CONTRACTOR Quality Assurance Inspectors shall be from a third-party company with no affiliation with the CONTRACTOR.
      c. CONTRACTOR shall provide documentation for all inspection equipment showing the date when last calibrated and by the company that performed the calibration. All equipment shall be calibrated within the previous 12 months from the date of use, unless otherwise permitted by manufacturer and OWNER. If a difference in readings is discovered between CONTRACTOR and OWNER or Quality Assurance Inspector inspection equipment, all parties shall verify their equipment is free from damage and is in proper working condition.

1.7 WARRANTY

A. Contractor Warranty:
   1. Repair or replace coating that does not comply with requirements; that fails in adhesion, cohesion, or general durability; that cracks, checks, fades, or chalks; where visible rust occurs; or that deteriorates in manner not clearly specified by submitted CSM's data as inherent quality of material for application indicated.

2. Coating re-work shall closely match color of existing coating. Extend new coating to reveals, surface edges, or other natural termination points to minimize differences in appearance between new and existing coating.
3. Warranties Coverage:
   a. Adhesive or cohesive failure of existing coating that remains in place.
   b. Necessary surface preparation Work.
   c. Providing access to warranty Work.
   d. Materials
4. Warranty Period: 1 year after quality assurance acceptance of completed system. Warranty periods extending beyond 1 year are desirable and will be considered during bid evaluation.
   a. An annual follow-up inspection shall be conducted following 12 months of service after acceptance of the coating work. Service is identified as exposure to the intended environment(s) for which the coating was selected for (Example: Interior tank wall service = Exposure to process liquids for which tank is used for). Owner, CONTRACTOR's representative and a representative of the CSM shall attend this follow-up inspection.

B. Coating Manufacturer Warranty:
   1. Submit a written material warranty, executed by the CSM, agreeing to repair or replace coatings materials that fail within specified warranty period. Failures include, but are not limited to, water penetration through the coating, blistering and/or peeling of the coating.
   2. Warranty Period: 3 years of service after acceptance of the coating work. Warranty periods extending beyond 3 years are desirable and will be considered during bid evaluation.

1.8 DELIVERY, STORAGE AND HANDLING

A. Adhere to requirements herein and applicable requirements within the Contract Documents.

B. Deliver materials to Project site in original containers with seals unbroken, labeled with:
   1. Product name or title of material.
   2. Manufacturer's stock/batch number.
   3. Date of manufacture and shelf life, or expiration date.
   4. Contents by volume, for pigment and vehicle constituents.
   5. Application and mixing instructions.
   6. Handling instructions and precautions.
   7. Hazardous material identification label.

C. Store materials in original, undamaged containers and, if permitted, partially-used materials tightly covered containers in clean, dry, well-ventilated, protected location on raised platforms with weather-protective coverings, within temperature range required by coating manufacturer. Protect stored materials from direct sunlight, heat, sparks, and flames.

D. Limit stored materials on structures to safe loading of structure at time materials are stored, and to avoid permanent deck deflection.

E. Handle and store materials to prevent damage.

F. Conspicuously mark damaged or opened containers, containers with contaminated materials, diluted materials and/or expired materials and remove from site as soon as possible.

G. Empty containers used on job shall have labels cancelled and shall be clearly marked.

H. Dispose materials in accordance with Federal Register 40 CFR 262.

1.9 CLEANING

A. At end of each workday at a minimum, clean site and work areas and place rubbish, empty cans, rags, and other discarded materials in appropriate containers.

B. After completing coating Work, clean spillage, overspray, and spatter from adjacent surfaces using cleaning agents and procedures recommended by manufacturer of affected surface. Exercise care to avoid scratching or damage to surfaces. Repair surfaces stained, marred, or otherwise damaged during coating Work.

C. Upon completion of coating work the CONTRACTOR shall remove surplus materials, protective coverings, and accumulated rubbish, and thoroughly clean all surfaces and repair any overspray or other coating-related damage.

1.10 SAFETY

A. Adhere to requirements herein and applicable requirements within the Contract Documents.

B. The CONTRACTOR is required to attend a safety briefing with OWNER prior to Work.

C. The CONTRACTOR shall ensure OWNER and CONTRACTOR personnel are aware of any hazards peculiar to the jobsite.
   1. Provide and/or identify (if available) location(s) of first aid stations, eye wash stations and pertinent safety equipment
   2. Provide contact information of responsible personnel and emergency phone numbers.
   3. Obtain contact information for OWNER stakeholders and pertinent OWNER site personnel.
   4. Determine and communicate evacuation routes.

D. Keep all work areas clean and safe.

E. Obey all plant rules and regulations.

F. Barricade and/or establish appropriate labeled boundaries to prevent entry to Work location by individuals whom do not have a business need to enter.
   1. Establish appropriate sound and/or material exposure/hazard boundaries (as required).
   2. Hang appropriate hazard labels and/or communicate applicable hazards to appropriate OWNER personnel.
   3. Ensure appropriate contact information is clearly displayed and/or communicated such that individuals may contact responsible personnel to communicate hazards and/or permit access.

G. The CONTRACTOR shall conduct all work covered by this section in accordance with all pertinent OSHA regulations.

1.11 CHANGES IN WORK

A. It shall be the responsibility of the CONTRACTOR to notify OWNER of any conflicts, obstructions, discrepancies, damage, deterioration and similar items at variance with the Contract Document content, specifications, instructions, field conditions, weather, etc. that could jeopardize integrity or performance of coating systems promptly upon discovery by means of a formally submitted Request for Information (RFI).

B. CONTRACTOR shall submit proposed changes relating to Work including but not limited to scope, execution, materials, schedule, etc. to OWNER by means of a formally submitted RFI.

PART 2 - PRODUCTS

2.1 PRODUCTS AND MATERIALS

A. Source Limitations: For each coating system, obtain materials through one source from single coating manufacturer, or from sources approved by CSM(s).

B. Material Compatibility: Provide sealants, surfacers, primers, intermediate coats, finish coats, and related materials that are compatible with one another and substrates indicated under conditions of application and service, as demonstrated by CSM based on testing and field experience. Compatibility shall be verified as part of the bid process.

C. Material Quality: Provide CSM(s) quality coating materials that are factory formulated and are recommended by CSM for application indicated. Material containers not displaying CSM(s) product identification are not acceptable.

D. Material Color Requirements:
   1. General:
      a. All coating applications requiring multiple coats, stripe coating and/or similar multi-stage applications shall be required to vary colors with each respective coat. Final finish color shall be approved by OWNER.
   2. For Metallic Surfaces:
      a. Immersion
         1) Prime Coat: Red
         2) Intermediate Coat: Beige
         3) Finish Coat: Gray
         4) Or OWNER approved color combination.
      b. Atmospheric
         1) Prime Coat: Red
         2) Intermediate Coat: White
         3) Finish Coat: Selected by OWNER
         4) Or OWNER approved color combination.

E. Use one of following systems or approved equal:
   1. HRSD System #1: Acrylic Latex; For Interior & Exterior Concrete, CMU and Brick Substrates Exposed to Weathering Only ; For Aesthetics ; Breathable ; Not for Exposure to Corrosive Chemicals, Immersion and/or Constant Wet/Dry Conditions:

MANUFACTURER	FILLER/ SURFACER	DFT (MIL)	BASE COAT	DFT (MIL)	FINISH COAT	DFT (MIL)	TOTAL DFT (MIL)
Carboline	Sanitile 100	10 – 12	Carbocrylic 3359 DTM	3	Carbocrylic 3359 DTM	3	16 – 18
International	Devoe Tru-Glaze-WB 4015	10 – 11	Devoe Devcryl 1448	3 – 4	Devoe Devcryl 1448	3 – 4	16 – 19
PPG	Pitt-Glaze 16-90	10 – 13	N/A	N/A	Perma-Crete 4-110	6 – 7.2	16 – 20.2
Sherwin Williams	Heavy Duty Block Filler	10 – 18	Sher-Cryl	3 – 3.7	Sher-Cryl	3 – 3.7	16 – 25.4
Tnemec	Envirofill Series 130	10	N/A	N/A	W.B. Tneme-Crete Series 180	6 – 8	16 – 18
APPROVED EQUAL							

2. HRSD System #2: Elastomeric Acrylic; For Interior and Exterior Concrete, CMU, and Brick Substrates Exposed to Weathering and Requiring Flexibility ; For Aesthetics ; Breathable ; Not for Exposure to Corrosive Chemicals, Immersion and/or Constant Wet/Dry Conditions:

MANUFACTURER	PRIMER COAT	DFT (MIL)	FINISH COAT	DFT (MIL)	TOTAL DFT (MIL)
Carboline	Flexxide Elastomer 100	6 – 8	Flexxide Elastomer 100	6 – 8	12 – 16
Induron	AC 403 Acrylic Elastomeric Coating	6 – 8	AC 403 Acrylic Elastomeric Coating	6 – 8	12 – 16
PPG	Perma-Crete Pitt-Flex 4-110XI	6 – 7	Perma-Crete Pitt-Flex 4-110XI	6 – 7	12 – 14
Sherwin Williams	Loxon XP	6 – 8	Loxon XP	6 – 8	12 – 16
Tnemec	Enviro-Crete Series 156	6 – 8	Enviro-Crete Series 156	6 – 8	12 – 16
APPROVED EQUAL					

3. HRSD System #3: Cycloaliphatic Amine Epoxy; For Interior and Exterior Concrete, CMU, Brick and Ferrous Metal Substrates Exposed to Weathering, Intermittent Wetting and/or Mildly Corrosive Environments ; For Protection:

MANUFACTURER	BASE COAT	DFT (MIL)	FINISH COAT	DFT (MIL)	TOTAL DFT (MIL)
Carboline	Carboguard 890	6 – 8	Carboguard 890	6 – 8	12 – 16
International	Devoe Bar-Rust 231	6 – 8	Devoe Bar-Rust 231	6 – 8	12 – 16
PPG	Amerlock 2 / 400	6 – 8	Amerlock 2 / 400	6 – 8	12 – 16
Sherwin Williams	Dura-Plate 235	6 – 8	Dura-Plate 235	6 – 8	12 – 16
Tnemec	H.S. Epoxy Series 104	6 – 8	H.S. Epoxy Series 104	6 – 8	12 – 16
APPROVED EQUAL					

4. HRSD System #4: Cycloaliphatic Amine Epoxy; For Interior and Exterior Concrete, CMU, Brick and Ferrous Metal Substrates Exposed to Weathering and/or Mildly Corrosive Environments:

MANUFACTURER	FINISH COAT	DFT (MIL)	TOTAL DFT (MIL)
Carboline	Carboguard 890	6 – 8	6 – 8
International	Devoe Bar-Rust 231	6 – 8	6 – 8
PPG	Amerlock 2 / 400	6 – 8	6 – 8
Sherwin Williams	Dura-Plate 235	6 – 8	6 – 8
Tnemec	H.S. Epoxy Series 104	6 – 8	6 – 8
APPROVED EQUAL			

5. HRSD System #5: Surfacer and Reinforced Epoxy ; For Concrete Substrates with Loss of Concrete ≤ 1/2-inch ; For Submerged and Intermittently Submerged Environments ; For Exposure to Process Chemicals, H_2S and MIC ; For Exposure to Abrasives:

MANUFAC.	FILLER/ SURFACER	DFT (IN)	PRIMER COAT	DFT (MIL)	BASE COAT	DFT (MIL)	FINISH COAT	DFT (MIL)	TOTAL DFT
Carboline	Carboguard 510SG	1/2 (max)	N/A	N/A	Plasite 4500S	30 (min)	Plasite 4500S	30 (min)	1/2” (max) + 60 mil (min)
International	Ceilcote Corocrete 400MP	1/2 (max)	Ceilcote 680M Concrete Primer	5 – 6	N/A	N/A	Enviroline 376F60 Glass Reinf. Epoxy	60 (min)	1/2” (max) + 65 mil (min)
Sauereisen	Restokrete Substrate Resurfacer No. F-121	1/2 (max)	N/A	N/A	N/A	N/A	Sewergard 210S	30 (min)	1/2” (max) + 60 mil (min)
Sherwin Williams	Duraplate 2300	1/2 (max)	N/A	N/A	Duraplate 5900	30 (min)	Duraplate 5900	30 (min)	1/2” (max) + 60 mil (min)
Tnemec	Mortarclad 218	1/2 (max)	N/A	N/A	Perma-Glaze Series 435	30 (min)	Perma-Glaze Series 435	30 (min)	1/2” (max) + 60 mil (min)
APPROVED EQUAL									

6. HRSD System #6: Surfacer and Reinforced Epoxy (Spray or Trowel); For Concrete Substrates with Loss of Concrete ≤ 1/2-inch ; For Submerged and Intermittently Submerged Environments ; For Exposure to Process Chemicals, H_2S and MIC ; For Exposure to Abrasives:

MANUFACTURER	SURFACER	DFT (IN)	BASE COAT	DFT (IN)	FINISH COAT	DFT (MIL)	TOTAL DFT
Carboline	Carboguard 510SG	1/2 (max)	Plasite 5371	1/8 (min)	Plasite 4500S	20 (min)	1/2” (max) + 1/8” (min) + 20 mil (min)
Sauereisen	Restokrete Substrate Resurfacer No. F-121	1/2 (max)	Sewergard 210T or 210S	1/8 (min)	Sewergard Glaze 210GL	20 (min)	1/2” (max) + 1/8” (min) + 20 mil (min)
Sherwin Williams	Duraplate 2300	1/2 (max)	Duraplate 5900 DP Mortar	1/8 (min)	Duraplate 5900	20 (min)	1/2” (max) + 1/8” (min) + 20 mil (min)
Tnemec	Mortarclad 218	1/2 (max)	Perma-Shield H_2S Series 434	1/8 (min)	Perma-Glaze Series 435	20 (min)	1/2” (max) + 1/8” (min) + 20 mil (min)
APPROVED EQUAL							

7. HRSD System #7: Surfacer and Reinforced Epoxy (Fast Cure); For Concrete Substrates with Loss of Concrete ≤ 1/2-inch ; For Submerged and Intermittently Submerged Environments ; For Exposure to Process Chemicals, H_2S and MIC ; For Exposure to Abrasives:

MANUFACTURER	SURFACER	DFT (IN)	FINISH COAT	DFT (MIL)	TOTAL DFT
Raven Lining Systems	Raven 755	1/2 (max)	Raven 405 FS/UFS	1/8 (min)	1/2” (max) + 1/8” (min)
Sauereisen	Restokrete Substrate Resurfacer No. F-121	1/2 (max)	Sewergard 210FS	1/8 (min)	1/2” (max) + 1/8” (min)
Sherwin Williams	Duraplate 2300	1/2 (max)	Duraplate 6100 DP Mortar	1/8 (min)	1/2” (max) + 1/8” (min)
APPROVED EQUAL					

8. HRSD System #8: Surfacer and Polyurethane; For Concrete Substrates with Loss of Concrete ≤ 1/2-inch; For Submerged, Intermittently Submerged and Exterior Environments; For Substrates Requiring Flexibility; Not for Substrates in Abrasive Environments:

MANUFACTURER	SURFACER	DFT (IN)	FINISH COAT	DFT (MIL)	TOTAL DFT
Carboline	Carboguard 510SG	1/2 (max)	Reactamine 760	100 (min)	1/2” (max) + 100 mil (min)
International	Ceilcote Corocrete 400MP	1/2 (max)	Polibrid 705E	100 (min)	1/2” (max) + 100 mil (min)
Sauereisen	Restokrete Substrate Resurfacer No. F-121	1/2 (max)	Conoflex Urethane No. 381	100 (min)	1/2” (max) + 100 mil (min)
Sherwin Williams	Duraplate 2300	1/2 (max)	Poly-Cote 115	100 (min)	1/2” (max) + 100 mil (min)
Tnemec	Mortarclad 218	1/2 (max)	Elasto-Shield Series 406	100 (min)	1/2” (max) + 100 mil (min)
APPROVED EQUAL					

9. HRSD System #9: Surfacer and Polyurethane; For Concrete Substrates with Loss of Concrete ≤ 1/2-inch; For Submerged, Intermittently Submerged and Exterior Environments; For Substrates Requiring Flexibility; Not for Substrates in Abrasive Environments:

MANUFACTURER	SURFACER	DFT (IN)	FINISH COAT	DFT (MIL)	TOTAL DFT
Carboline	Carboguard 510SG	1/2 (max)	Reactamine 760	60 (min)	1/2” (max) + 60 mil (min)
International	Ceilcote Corocrete 400MP	1/2 (max)	Polibrid 705E	60 (min)	1/2” (max) + 60 mil (min)
PPG	Restokrete Substrate Resurfacer No. F-121	1/2 (max)	Amerthane 490	60 (min)	1/2” (max) + 60 mil (min)
Sauereisen	Restokrete Substrate Resurfacer No. F-121	1/2 (max)	Conoflex Urethane No. 381	60 (min)	1/2” (max) + 60 mil (min)
Sherwin Williams	Duraplate 2300	1/2 (max)	Poly-Cote 115	60 (min)	1/2” (max) + 60 mil (min)
Tnemec	Mortarclad 218	1/2 (max)	Elasto-Shield Series 406	60 (min)	1/2” (max) + 60 mil (min)
APPROVED EQUAL					

10. HRSD System #10: Reinforced Epoxy (Spray or Trowel); For Concrete Substrates with loss ≤ 1/4-inch; For Submerged and Intermittently Submerged Environments; For Exposure to Process Chemicals, H_2S and MIC; For Exposure to Abrasion:

MANUFACTURER	BASE COAT	DFT (IN)	FINISH COAT	DFT (MIL)	TOTAL DFT
Carboline	Plasite 5371	1/8 (min)	Plasite 4500S	20 (min)	1/8” (min) + 20 mil (min)
Sauereisen	Sewergard 210T or 210S	1/8 (min)	Sewergard Glaze 210GL	20 (min)	1/8” (min) + 20 mil (min)
Sherwin Williams	Duraplate 5900 DP Mortar	1/8 (min)	Duraplate 5900	20 (min)	1/8” (min) + 20 mil (min)
Tnemec	Perma-Shield H_2S Series 434	1/8 (min)	Perma-Glaze Series 435	20 (min)	1/8” (min) + 20 mil (min)
APPROVED EQUAL					

11. HRSD System #11: Reinforced Epoxy (Fast Cure); For Concrete Substrates with loss ≤ 1/4-inch ; For Submerged and Intermittently Submerged Environments ; For Exposure to Process Chemicals, H_2S and MIC ; For Exposure to Abrasion:

MANUFACTURER	FINISH COAT	DFT (IN)	TOTAL DFT (IN)
Raven Lining Systems	Raven 405 FS/UFS	1/8 (min)	1/8 (min)
Sauereisen	Sewergard 210FS	1/8 (min)	1/8 (min)
Sherwin Williams	Duraplate 6100 DP Mortar	1/8 (min)	1/8 (min)
APPROVED EQUAL			

12. HRSD System #12: Crystalline Cementitious Surfacer and Waterproofing; For Concrete Substrates with Loss of Concrete ≤ 7/16-inches; For Submerged, Intermittently Submerged and Atmospheric Environments; For Exposure to Mild Chemicals and Abrasives:

MANUFACTURER	PATCHING & REPAIR	SURFACER	DFT (IN)	FINISH COAT	DFT (IN)	TOTAL DFT (IN)
Xypex	Patch'N Plug	Megamix I	≤ 3/8	Concentrate	1/16	7/16 (max)
APPROVED EQUAL						

13. HRSD System #13: Crystalline Cementitious Surfacer and Waterproofing; For Concrete Substrates with Loss of Concrete ≤ 2-inches; For Submerged, Intermittently Submerged and Atmospheric Environments; For Exposure to Mild Chemicals and Abrasives:

MANUFACTURER	PATCHING & REPAIR	SURFACER	DFT (IN)	FINISH COAT	DFT (IN)	TOTAL DFT (IN)
Xypex	Patch'N Plug	Megamix II	3/8 < x ≤ 2	Concentrate	1/16	2 (max)
APPROVED EQUAL						

14. HRSD System #14: Epoxy; For Concrete Shop Floors; For Interior Environments; For Exposure to Heavy Loading:

MANUFACTURER	PRIMER COAT	DFT (MIL)	BASE COAT	DFT (MIL)	FINISH COAT	DFT (MIL)	TOTAL DFT (MIL)
Armorpoxy	ArmorPoxy II	3	N/A	N/A	ArmorUltra ARM707X	5	8 (min)
Armorpoxy	Per CSM Req.	6	ArmorUltra ARM707X	5	ArmorUltra ARM707X	12	23 (min)
PPG	NU-KLAD IMP	TBD	N/A	N/A	NU-KLAD SL	80	80
PPG	KL5129/KL5129B	2 – 4	KL5500/KL5500B	N/A	KL5500/KL5500B	35–50	37 – 54
PPG	MegaSeal HSPC Primer	TBD	MegaSeal HDSL	60 (min)	MegaSeal TF or MegaSeal HPU (Optional)	TBD	60 (min)
Sherwin Williams	Armorseal 1000HS	TBD	N/A	N/A	Armorseal 1000HS	5 – 10	5 – 10
APPROVED EQUAL							

15. HRSD System #15: Polyurethane ; For Concrete Shop Floors ; For Interior and Exterior Environments ; For Exposure to Heavy Loading:

MANUFACTURER	PRIMER / SEALER	DFT (MIL)	FINISH COAT	DFT (MIL)	TOTAL DFT (MIL)
PPG	MegaSeal TF	TBD	MegaSeal HPU	3 – 5	3 – 5
Sherwin Williams	33 Epoxy Primer / Sealer	TBD	HS Polyurethane	2 – 3	2 – 3
APPROVED EQUAL					

16. HRSD System #16: Reinforced Epoxy ; For Concrete and Ferrous Metal Substrates ; For Submerged and Intermittently Submerged Environments ; For Exposure to Process Chemicals, H_2S and MIC ; For Exposure to Abrasives:

MANUFACTURER	PRIMER COAT	DFT (MIL)	BASE COAT	DFT (MIL)	FINISH COAT	DFT (MIL)	TOTAL DFT (MIL)
Carboline	Per CSM Requirements	TBD	Plasite 4500S	30 (min)	Plasite 4500S	30 (min)	60 mil (min)
International	Ceilcote 680M Concrete Primer	5 – 6	N/A	N/A	Enviroline 376F60 Glass Reinf. Epoxy	60 (min)	60 mil (min)
Sauereisen	Per CSM Requirements	TBD	N/A	N/A	Sewergard 210S	60 (min)	60 mil (min)
Sherwin Williams	Per CSM Requirements	TBD	Duraplate 5900	30 (min)	Duraplate 5900	30 (min)	60 mil (min)
Tnemec	Per CSM Requirements	TBD	Perma-Glaze Series 435	30 (min)	Perma-Glaze Series 435	30 (min)	60 mil (min)
APPROVED EQUAL							

17. HRSD System #17: Reinforced Epoxy ; For Concrete and Ferrous Metal Substrates ; For Submerged and Intermittently Submerged Environments ; For Exposure to Process Chemicals, H_2S and MIC ; For Exposure to Abrasives:

MANUFACTURER	PRIMER COAT	DFT (MIL)	FINISH COAT	DFT (MIL)	TOTAL DFT (MIL)
Carboline	Per CSM Requirements	TBD	Plasite 4500S	30 (min)	30 (min)
International	Ceilcote 680M Primer (For Concrete Only)	5 – 6	Enviroline 376F60 Glass Reinf. Epoxy	30 (min)	35 (min)
Sauereisen	Per CSM Requirements	TBD	Sewergard 210S	30 (min)	30 (min)
Sherwin Williams	Per CSM Requirements	TBD	Duraplate 5900	30 (min)	30 (min)
Tnemec	Per CSM Requirements	TBD	Perma-Glaze Series 435	30 (min)	30 (min)
APPROVED EQUAL					

18. HRSD System #18: Glass Flake Reinforced Amine Epoxy ; For Submerged and Intermittently Submerged Ferrous Metal ; For Exposure to Mild Chemicals ; For Exposure to Abrasives:

MANUFACTURER	STRIPE COAT	FINISH COAT	DFT (MIL)	TOTAL DFT (MIL)
Carboline	Carboguard 890GF	Carboguard 890GF	20	20
International	Ceilcote 662 Flakeline	Ceilcote 662 Flakeline	20	20
PPG	Amerlock 2/400GF	Amerlock 2/400GF	20	20
Sherwin Williams	Sher-Glass FF Glass Flake Reinforced Epoxy	Sher-Glass FF Glass Flake Reinforced Epoxy	20	20
APPROVED EQUAL				

19. HRSD System #19: Polyurethane ; For Concrete and Ferrous Metal Substrates ; For Submerged, Intermittently Submerged and Exterior Environments ; For Substrates Requiring Flexibility ; Not for Substrates in Abrasive Environments:

MANUFACTURER	PRIMER COAT	DFT (MIL)	FINISH COAT	DFT (MIL)	TOTAL DFT (MIL)
Carboline	Per CSM Requirements	TBD	Reactamine 760	100 (min)	100 (min)
International	Per CSM Requirements	TBD	Polibrid 705E	100 (min)	100 (min)
PPG	Amerlock 2/400	4 (min)	Amerthane 490	100 (min)	104 (min)
Sauereisen	ConoPrime No. 502	TBD	Conoflex Urethane No. 381	100 (min)	100 (min)
Sherwin Williams	Duraplate 235	4 (min)	Poly-Cote 115	100 (min)	104 (min)
Tnemec	Per CSM Requirements	TBD	Elasto-Shield Series 406	100 (min)	100 (min)
APPROVED EQUAL					

20. HRSD System #20: Polyurethane ; For Concrete and Ferrous Metal Substrates ; For Submerged, Intermittently Submerged and Exterior Environments ; For Substrates Requiring Flexibility ; Not for Substrates in Abrasive Environments:

MANUFACTURER	PRIMER COAT	DFT (MIL)	FINISH COAT	DFT (MIL)	TOTAL DFT (MIL)
Carboline	Per CSM Requirements	TBD	Reactamine 760	60 (min)	60 (min)
International	Per CSM Requirements	TBD	Polibrid 705E	60 (min)	60 (min)
PPG	Amerlock 2/400	4 (min)	Amerthane 490	60 (min)	64 (min)
Sauereisen	ConoPrime No. 502	TBD	Conoflex Urethane No. 381	60 (min)	60 (min)
Sherwin Williams	Duraplate 235	4 (min)	Poly-Cote 115	60 (min)	64 (min)
Tnemec	Per CSM Requirements	TBD	Elasto-Shield Series 406	60 (min)	60 (min)
APPROVED EQUAL					

21. HRSD System #21: Coal-Tar Epoxy ; For Concrete and Ferrous Metal Substrates ; For Below-grade and Submerged Environments ; For Exposure to Mild Chemicals and Abrasives:

MANUFACTURER	STRIPE COAT	FINISH COAT	DFT (MIL)	TOTAL DFT (MIL)
Carboline	Bitumastic 300M	Bitumastic 300M	20 (min)	20 (min)
Sherwin Williams	Hi-Mil Sher-Tar Epoxy	Hi-Mil Sher-Tar Epoxy	20 (min)	20 (min)
Tnemec	Hi-Build Tneme-Tar Series 46H-413	Hi-Build Tneme-Tar Series 46H-413	20 (min)	20 (min)
APPROVED EQUAL				

22. HRSD System #22: Reinforced Epoxy Liner System ; For Chemical Containment ; For Concrete and Ferrous Metal Substrates ; For Exposure to Caustic, Ferric Chloride, Polymers and Mild Chemicals:

MANUFACTURER	PRIMER COAT	DFT (MIL)	BASE COAT	DFT (MIL)	BLEND / BROADCAST COAT	FINISH COAT	DFT (MIL)	TOTAL DFT (MIL)
Carboline	Per CSM Requirements	TBD	Semstone 140	30 (min)	20/40 Mesh Aggregate	Semstone 140	30 (min)	60 (min)
Tnemec	Epoxoprime Series 201	4 – 6	Power-Tread Series 237	63 (min)	30/50 Mesh Aggregate	Tneme-Glaze Series 281	6 – 8	73 (min)
APPROVED EQUAL								

23. HRSD System #23: Reinforced Epoxy Novolac Liner System with Fiberglass Mat ; For Chemical Containment ; For Concrete and Ferrous Metal Substrates ; For Exposure to Sulfuric Acid, Sodium Bisulfite and Organic Chemicals:

MANUFACTURER	BASE COAT	DFT (MIL)	BLEND / BROADCAST COAT	FINISH COAT	DFT (MIL)	TOTAL DFT (MIL)
Carboline	Semstone 145	30 (min)	20/40 Mesh Aggregate	Semstone 145	30 (min)	60 (min)
International	Devran 124	30 – 40	20/40 Mesh Aggregate	Devran 124	30 – 40	60 (min)
PPG	Amerlock Sealer & Novaguard 840	30 (min)	20/40 Mesh Aggregate	Novaguard 840	30 (min)	60 (min)
APPROVED EQUAL						

24. HRSD System #24: Epoxy Novolac Liner System with Fiberglass Mat; Interior and Exterior Concrete and Ferrous Metal Elements Exposed to Acids, Sodium Bisulfite, Organic Chemicals and Solvents:

MANUF.	PRIMER COAT	DFT (MIL)	BASE COAT	DFT (MIL)	BLEND / BROADCAST COAT	REINF.	SATURANT	FINISH COAT	DFT (MIL)	TOTAL DFT (MIL)
Carboline	Semstone 110	5 – 20	Semstone 145	25–35	20/40 Mesh Aggregate	1.5 oz. Fiberglass Reinf. Mat	Per CSM Requirements	Semstone 145	90–100	130 (min)
Sherwin Williams	Corobond 100 Epoxy Primer / Sealer	4 – 8	Core-Cote HCR Epoxy (Clear)	65	Type M Aggregate	1.0 oz. Glass Mat	Core-Cote HCR Epoxy (Clear)	Core-Cote HCR FF Flake Filled Epoxy	20	130 (min)
Tnemec	Epoxoprime Series 201	12	Chembloc Series 239 SC Mortar	80	Per CSM Requirements	3/4 Chopped Strand Fiberglass	Chembloc Series 239 (12 mils DFT)	Tneme-Glaze Series 282	24	128 (min)
APPROVED EQUAL										

25. HRSD System #25: Reinforced Epoxy Vinyl Ester Liner System with Fiberglass Mat ; For Chemical Containment ; For Concrete and Ferrous Metal Substrates ; For Exposure to a Wide Range of Chemicals:

MANUF.	PRIMER COAT	DFT (MIL)	BASE COAT	DFT (MIL)	BROADCAST COAT	REINF.	SATURANT	FINISH COAT	DFT (MIL)	TOTAL DFT (MIL)
Carboline	Semstone 800 Series Primer	TBD	Semstone 870	25–35	20/40 Mesh Aggregate	1.5 oz. Fiberglass Reinf. Mat	Per CSM Requirements	Semstone 870	90–100	125 (min)
International	Ceilcote 380 Primer	5	Ceilcote 6640 Ceilcrete	80	Per CSM Requirements	1.5 oz. Fiberglass Reinf. Mat	Per CSM Requirements	Ceilcote Flakeline 242	25	110 (min)
PPG	PolySpec PE-310	TBD	PermaRez 300	50–60	F-5 Powder	24 oz woven roving	PermaRez 300 (25 mil DFT)	PermaRex 300	50-60	125 (min)
Sauereisen	VEPrime No. 550	5–10	VEMatte No. 470	63	Per CSM Requirements	1.5 oz. Fiberglass Reinf. Mat	VEMatte No. 470 (63 mils DFT)	VEGlaze No. 472	10	141 (min)
Sherwin Williams	Corobond Vinyl Ester Primer	4 .5	Core-Cote VEN (Clear)	65	Type M Aggregate	1.0 oz. Glass Mat	Core-Cote VEN (Clear), 30 mils DFT	Core-Cote VEN FF Flake Filled	20	119.5 (min)
Tnemec	Epoxoprime Series 201	12	Chembloc Series 239 SC Mortar	80	Per CSM Requirements	3/4 Chopped Fiberglass	Chembloc Series 239 (12 mil DFT)	Tneme-Glaze Series 282	12	116 (min)
APPROVED EQUAL										

26. HRSD System #26: Amine Cured Epoxy Novolac ; For Ferrous Metals ; For Interior, Exterior, Submerged and Intermittently Submerged Environments ; For Exposure to H_2S, Acids, Sodium Bisulfite, Polymers and Other Chemicals:

MANUFACTURER	STRIPE COAT	FINISH COAT	DFT (MIL)	TOTAL DFT (MIL)
Carboline	Plasite 4550S	Plasite 4550S	30 (min)	30 (min)
International	Enviroline 225	Enviroline 225	30 (min)	30 (min)
Sherwin Williams	Core-Cote HCR FF	Core-Cote HCR FF	30 (min)	30 (min)
APPROVED EQUAL				

27. HRSD System #27: Zinc, Cycloaliphatic Amine Epoxy and Polyurethane ; For Ferrous Metal Substrates ; For Exterior Environments ; For Exposure to Atmosphere, Weathering, UV and Mildly Corrosive Environments:

MANUF.	PRIMER COAT	DFT (MIL)	STRIPE COAT	BASE COAT	DFT (MIL)	STRIPE COAT	FINISH COAT	DFT (MIL)	TOTAL DFT (MIL)
Carboline	Carbozinc 859	3 – 5	Carboguard 890	Carboguard 890	5 – 6	Carbothane 134 HG	Carbothane 134 HG	3	11 – 14
International	Cathacoat 302H	3 – 4	Devoe Bar-Rust 231	Devoe Bar-Rust 231	5 – 8	Devthane 379	Devthane 379	3	11 – 15
PPG	Amercoat 68 HS	3 – 5	Amerlock 2/400	Amerlock 2/400	5 – 8	Amershield	Amershield	3 – 4	11 – 17
Sherwin Williams	Zinc Clad III	3 – 5	Dura-Plate 235 M-P Epoxy	Dura-Plate 235 M-P Epoxy	5 – 8	Acrolon 7300 Polyurethane	Acrolon 7300 Polyurethane	3 – 5	11 – 18
Tnemec	Tneme-Zinc Series 90-97	3–3.5	Hi-Build Epoxoline II Series N66HS or Tneme-Fascure Series 161HS	Hi-Build Epoxoline II Series N66HS or Tneme-Fascure Series 161HS	5 – 10	Endura-Shield II Series 1075	Endura-Shield II Series 1075	3 – 5	11 – 18.5
APPROVED EQUAL									

28. HRSD System #28: Cycloaliphatic Amine Epoxy and Polyurethane ; For Ferrous Metal Substrates ; For Exterior Environments ; For Exposure to Atmosphere, Weathering, UV and Mildly Corrosive Environments:

MANUF.	PRIMER COAT	DFT (MIL)	STRIPE COAT	BASE COAT	DFT (MIL)	STRIPE COAT	FINISH COAT	DFT (MIL)	TOTAL DFT (MIL)
Carboline	Carboguard 890	5 – 6	Carboguard 890	Carboguard 890	5 – 6	Carbothane 134 HG	Carbothane 134 HG	3	13 – 15
International	Devoe Bar-Rust 231	5 – 8	Devoe Bar-Rust 231	Devoe Bar-Rust 231	5 – 8	Devthane 379	Devthane 379	3	13 – 19
PPG	Amerlock 2/400	5 – 8	Amerlock 2/400	Amerlock 2/400	5 – 8	Amershield	Amershield	3 – 4	13 – 20
Sherwin Williams	Dura-Plate 235 M-P Epoxy	5 – 8	Dura-Plate 235 M-P Epoxy	Dura-Plate 235 M-P Epoxy	5 – 8	Acrolon 7300 Polyurethane	Acrolon 7300 Polyurethane	3 – 5	13 – 21
Tnemec	Hi-Build Epoxoline II Series N66HS or Tneme-Fascure Series 161HS	5 – 10	Hi-Build Epoxoline II Series N66HS or Tneme-Fascure Series 161HS	Hi-Build Epoxoline II Series N66HS or Tneme-Fascure Series 161HS	5 – 10	Endura-Shield II Series 1075	Endura-Shield II Series 1075	3 – 5	13 – 25
APPROVED EQUAL									

29. HRSD System #29: Aluminum Filled Epoxy Mastic ; For Aluminum and Galvanized Steel Substrates ; For Interior and Exterior Environments ; For Exposure to Atmosphere, UV, Weathering and Mildly Corrosive Environments:

MANUFACTURER	STRIPE COAT	FINISH COAT	DFT (MIL)	TOTAL DFT (MIL)
Carboline	Carbomastic 15	Carbomastic 15	5 – 10	5 – 10
International	Devoe Bar-Rust 231 Epoxy Mastic Aluminum	Devoe Bar-Rust 231 Epoxy Mastic Aluminum	5 – 8	5 – 8
PPG	Amerlock 400 AL	Amerlock 400 AL	5 – 8	5 – 8
Sherwin Williams	Epoxy Mastic Aluminum II	Epoxy Mastic Aluminum II	5 – 6	5 – 6
APPROVED EQUAL				

30. HRSD System #30: Silicone Hybrid ; For Ferrous Metal and Stainless Steel Substrates ; For High Temperature Exposures ≤ 1000°:

MANUFACTURER	PRIMER COAT	BASE COAT	DFT (MIL)	FINISH COAT	DFT (MIL)	TOTAL DFT (MIL)
Carboline	Per CSM Requirements	Thermaline 4900	1.5–2	Thermaline 4900	1.5 – 2	3 – 4
International	Per CSM Requirements	Intertherm 1875	1 - 2	Intertherm 1875	1 – 2	3 – 4
PPG	Per CSM Requirements	Hi-Temp 500 V	2–2.5	Hi-Temp 500 V	2–2.5	4 – 5
Sherwin Williams	Per CSM Requirements	Heat-Flex Hi-Temp 500	2–2.5	Heat-Flex Hi-Temp 500	2–2.5	4 – 5
Tnemec	Per CSM Requirements	Endura-Heat Series 1552	2 – 3	Endura-Heat Series 1552	2 – 3	4 – 6
APPROVED EQUAL						

31. HRSD System #31: Silicone Acrylic ; For Ferrous Metal and Stainless Steel Substrates ; For High Temperature Exposures ≤ 500°:

MANUFACTURER	PRIMER COAT	BASE COAT	DFT (MIL)	FINISH COAT	DFT (MIL)	TOTAL DFT (MIL)
Carboline	Per CSM Requirements	Thermaline 4700	2	Thermaline 4700	2	4
International	Per CSM Requirements	Intertherm 50	1	Intertherm 50	1	2
PPG	Per CSM Requirements	PPG Hi-Temp 1000 V	1.5 – 2	PPG Hi-Temp 1000 V	1.5 – 2	3 – 4
Sherwin Williams	Per CSM Requirements	Heat-Flex Hi-Temp 1000	1.5 – 2	Heat-Flex Hi-Temp 1000	1.5 – 2	3 – 4
Tnemec	Per CSM Requirements	Endura-Heat Series 1556	2 – 3	Endura-Heat Series 1556	2 – 3	4 – 6
APPROVED EQUAL						

32. HRSD System #32: Epoxy Urethane ; For FRP Substrates ; For Exterior and Intermittently Submerged Environments ; For Exposure to Atmosphere, Weathering, UV and Mildly Corrosive Environments:

MANUFACTURER	STRIPE COAT	PRIMER COAT	DFT (MIL)	STRIPE COAT	FINISH COAT	DFT (MIL)	TOTAL DFT (MIL)
Carboline	Carbocrylic 120	Carbocrylic 120	2 – 3	Carbothane 133HB	Carbothane 133HB	3 – 5	5 – 8
International	Devran 201H	Devran 201H	2 – 3	Devthane 379	Devthane 379	3	5 – 6
PPG	Pittguard 97-145 Series	Pittguard 97-145 Series	4 – 7	Durethane DTM	Durethane DTM	3 – 5	7 – 12
Sherwin Williams	Macropoxy 646 Fast Cure Epoxy	Macropoxy 646 Fast Cure Epoxy	5 – 10	Acrolon 7300 Polyurethane	Acrolon 7300 Polyurethane	3 – 6	8 – 16
Tnemec	Chembuild Series 135	Chembuild Series 135	4 – 6	Endura-Shield II Series 1075	Endura-Shield II Series 1075	3 – 5	7 – 11
APPROVED EQUAL							

33. HRSD System #33: For FRP Substrates ; For Interior, Exterior and Submerged Environments ; For Exposure to Weathering and Mildly Corrosive Environments:

MANUFACTURER	STRIPE COAT	PRIMER COAT	DFT (MIL)	STRIPE COAT	FINISH COAT	DFT (MIL)	TOTAL DFT (MIL)
Carboline	Carbocrylic 120	Carbocrylic 120	2 – 3	Carbocrylic 120	Carbocrylic 120	2 – 3	5 (min)
International	Devran 201H	Devran 201H	2 – 3	Devran 201H	Devran 201H	2 – 3	5 (min)
PPG	Per CSM Requirements	Per CSM Requirements	TBD	Pittguard 97-145 Series	Pittguard 97-145 Series	4 – 7	5 (min)
Sherwin Williams	Per CSM Requirements	Per CSM Requirements	TBD	Macropoxy 646 Fast Cure Epoxy	Macropoxy 646 Fast Cure Epoxy	5 – 10	5 (min)
Tnemec	Chembuild Series 135	Chembuild Series 135	4 – 6	Endura-Shield II Series 1075	Endura-Shield II Series 1075	3 – 5	7 – 11
APPROVED EQUAL							

34. HRSD System #34: Waterborne Acrylic ; For PVC and CPVC Substrates ; For Interior, Exterior and Intermittently Submerged Environments ; For Exposure to Atmosphere, Weathering, UV and Mildly Corrosive Environments:

MANUFACTURER	PRIMER COAT	DFT (MIL)	STRIPE COAT	FINISH COAT	DFT (MIL)	TOTAL DFT (MIL)
Carboline	Carbocrylic 120	2	Carbocrylic 3359 DTM	Carbocrylic 3359 DTM	3	5
International	Devcryl 1440	2 – 4	Devcryl 1448	Devcryl 1448	3 – 4	5 – 8
PPG	Pitt-Tech Plus 4020PF	3–3.5	Pitt-Tech Plus	Pitt-Tech Plus	2 – 4	5 – 7.5
Sherwin Williams	DTM Acrylic Primer	2.5–5	DTM Acrylic Coating	DTM Acrylic Coating	3 – 4	5.5 – 9
Tnemec	Enduratone Series 1028	2 – 3	Enduratone Series 1028	Enduratone Series 1028	5 – 6	5 – 6

APPROVED EQUAL

35. HRSD System #35: Acrylic Latex ; For Wood Substrates : For Interior and Exterior Environments ; For Exposure to Atmosphere, Weathering and UV Environments:

MANUFACTURER	PRIMER COAT	DFT (MIL)	BASE COAT	DFT (MIL)	FINISH COAT	DFT (MIL)	TOTAL DFT (MIL)
Carboline	Carbocrylic 120	2 – 3	Carbocrylic 3359 DTM	2 – 3	Carbocrylic 3359 DTM	2 – 3	6 – 9
International	Devcryl 1440	2 – 4	Devcryl 1448	2 – 4	Devcryl 1448	2 – 4	6 – 12
Sherwin Williams	Exterior Oil-Based Wood Primer	2 – 3	DTM Acrylic Coating	2.5–4	DTM Acrylic Coating	2.5–4	7 – 11
Tnemec	Elasto-Grip FC 151-1051	1.5	Tneme-Cryl Series 6	2 – 3	Tneme-Cryl Series 6	2 – 3	6 (min)
APPROVED EQUAL							

36. HRSD System #36: Reflective White Elastomeric Acrylic ; For Built-Up Asphalt Roof (BUR), Granular Roll and Liquid Roof Substrates ; For Exterior Environments ; For Exosure to Atmosphere, Weathering and UV:

MANUFACTURER	SEALANTS	REINFORCEMENT	FILLER	PRIMER(1)	TOP COAT	TOTAL DFT (MIL)
ITW Polymers	E-Las-Tek #103 Crack & Joint Sealant	Tie-Tex Polyester Cold Process Roofing Fabric	E-Las-Tek #505 Puddle Plaster	Per CSM Requirements	E-Las-Tek #127 Solar One Plus	32 (min)
Tremco	Per CSM Requirements	Rapid Set Reinforcing Fabric	Per CSM Requirements	Tremprime WB	ICE Coating	32 (min)
APPROVED EQUAL						

NOTES:

1) Applicator shall verify required primer(s) based on surface materials, condition, etc.

37. HRSD System #37: 2-Part Polyurethane ; For Built-Up Asphalt Roof (BUR), Granular Roll and Liquid Roof Substrates ; For Exterior Environments ; For Exosure to Atmosphere, Weathering and UV:

MANUFACTURER	SEALANTS	REINFORCEMENT	FILLER	PRIMER(1)	TOP COAT	TOTAL DFT (MIL)
Tremco	Per CSM Requirements	AlphaGuard Glass Mat	Per CSM Requirements	AlphaGuard M-Prime or C-Prime	AlphaGuard BIO or MT Top Coat	80 (min)
APPROVED EQUAL						

NOTES:

1) Applicator shall verify required primer(s) based on surface materials, condition, etc.

38. HRSD System #38: Aliphatic Polyurethane ; For Built-Up Asphalt Roof (BUR), Granular Roll and Liquid Roof Substrates ; For Exterior Environments ; For Exosure to Atmosphere, Weathering and UV:

MANUFACTURER	SEALANTS	REINFORCEMENT	FILLER	PRIMER(1)	TOP COAT	TOTAL DFT (MIL)
ITW Polymers	ERsystems H.E.R.	Tie-Tex Polyester Cold Process Roofing Fabric	ERsystems Quicket	Polyurethane 300 Aromatic Base Coat	Polyurethane 300 Aliphatic Finish Coat	32 (min)
Tremco	Per CSM Requirements	Permafab Polyester Reinforcement	GEOGARD Seam Sealer	GEOGARD Base Coat	GEOGARD Finish Coat	32 (min)
APPROVED EQUAL						

NOTES:

1) Applicator shall verify required primer(s) based on surface materials, condition, etc.

39. HRSD System #39: Metallic Pigmented ; For Metal Roof Substrates ; For Exterior Environments ; For Exosure to Atmosphere, Weathering and UV:

MANUFACTURER	SEALANTS	REINFORCEMENT	FILLER	PRIMER(1)	TOP COAT	TOTAL DFT (MIL)
Tremco	Per CSM Requirements	Permafab Polyester Reinforcement	GEOGARD Seam Sealer	N/A	ALUMANATION 301	19 (min)
APPROVED EQUAL						

NOTES:

1) Applicator shall verify required primer(s) based on surface materials, condition, etc.

40. HRSD System #40: Reflective White Elastomeric Acrylic ; For Metal Roof Substrates ; For Exterior Environments ; For Exosure to Atmosphere, Weathering and UV:

MANUFACTURER	SEALANTS	REINFORCEMENT	FILLER	PRIMER(1)	TOP COAT	TOTAL DFT (MIL)
ITW Polymers	E-Las-Tek #103 Crack & Joint Sealant	Tie-Tex Polyester Cold Process Roofing Fabric	E-Las-Tek #505 Puddle Plaster	Per CSM Requirements	E-Las-Tek #127 Solar One Plus	17 (min)
Tremco	SOLARGARD Hybuild	Permafab Polyester Reinforcement	SOLARGARD Seam Sealer	SOLARGARD Ruse Primer WB	SOLARGARD Hybuild	17 (min)
APPROVED EQUAL						

NOTES:

1) Applicator shall verify required primer(s) based on surface materials, condition, etc.

PART 3 - EXECUTION

3.1 GENERAL

A. Coordinate Work with applicable stakeholders to ensure Work is effectively achieved without unintended obstructions, damage, interference, etc. Coordinate with:
   1. OWNER or OWNER'S designated representative.
   2. ENGINEER.
   3. Quality Assurance Inspector.
   4. Other trades to ensure that Work done by other trades is complete and ready to receive coating.
   5. Other trades to avoid or minimize Work in immediate vicinity of coating Work in progress or completed Work.

3.2 EXAMINATION

A. CONTRACTOR shall examine substrates under which coating systems will be applied and report to OWNER, in writing, any conditions that would adversely affect the appearance or performance of the coating systems and which cannot be put into an acceptable condition by the preparatory work specified herein. Typical examination includes, but is not limited to:
   1. Verification that Work done by other trades is complete and ready to receive coating.
   2. Verification that areas and conditions under which Work is to be performed permit proper and timely completion of Work.
   3. Verification of compatibility with and suitability of substrates, including existing coatings.

B. Do not proceed with affected Work until unsatisfactory conditions have been dispositioned and clear direction is provided.

C. Known, measurable and/or reasonably identifiable conditions prior to award of contract shall be the CONTRACTOR's responsibility. Means and methods to control and/or correct such conditions shall come at no cost to OWNER.

3.3 WORK CONDITIONS

A. Newly placed concrete surfaces shall be cured as recommended by the CSM prior to coating application, unless otherwise approved by OWNER and/or OWNER'S designated representative.

B. Apply coatings only when the prevailing environmental conditions are in accordance with the CSM(s) printed instructions. The CONTRACTOR shall be responsible to create and/or control environmental conditions at Work locations including within partially enclosed structures, enclosed structures and similar environments that are not significantly affected by the atmospheric environment.

3.4 PROTECTION

A. General:
   1. Rotating equipment, plant equipment, hardware, hardware accessories, nameplates, data tags, machined surfaces, sprinkler heads, electrical fixtures, and similar coated and/or uncoated items which are within, or in the vicinity of, surfaces to be coated shall be removed and reinstalled, masked and/or protected prior to surface preparation and coating operations.
   2. Mask off surfaces not scheduled to receive coating to protect from spillage and overspray.
   3. Protect Work of other trades from damage.
   4. Protect workers, pedestrians, other personnel, animals, plants, landscaping, adjacent structures, pavement, sidewalks, parked and moving vehicles and/or other elements in surrounding area from exposure to coating Work, including airborne materials and runoff. Correct damage as approved by OWNER, at no cost to OWNER.

5. As necessary, prevent access to Work areas or provide “Wet Paint” signs to protect newly coated surfaces. Aesthetic and/or physical damage from others in locations where adequate barricades and/or warnings are not present shall be corrected at no cost to OWNER.
6. Remove masking and other protective measures at completion of coating Work.
7. Correct damage by cleaning, repairing, replacing, or recoating as approved by OWNER, at no cost to OWNER. Restore damaged elements and components to original condition or better as found prior to start of Work.

B. Wind-Borne Damage: The wind velocity and direction shall be considered as having a major impact on blasting and spraying operations. Use necessary precautions to prevent undue dispersing of material. Use wind screen/overspray nets to minimize the spillage impact on the buildings and Site. CONTRACTOR is responsible for any damage to adjacent surfaces, environment, vehicles, etc.

3.5 SURFACE PREPARATION

A. General: The CONTRACTOR shall clean and prepare substrate(s) in accordance with the CSM’s written instructions. The following requirements herein shall apply:
   1. Surfaces to be coated shall be clean and dry excluding cementitious coatings that specifically require saturated conditions. Before applying coatings, oil, grease, dirt, rust, loose mill scale, old weathered coatings, laitance and other foreign substances shall be removed unless specifically stated otherwise herein. Oil and grease shall be removed before mechanical or abrasive blast cleaning is started. Where cleaning is accomplished by blast cleaning, the abrasive used shall be washed, graded and free of contaminants which might interfere with the adhesion of the coatings or cause soluble salt contamination of the substrate.
   2. Comply with all local, state and/or federal air quality and/or emission regulations and requirements.
      a. (As required) Provide containment, dust collectors and/or other means to control emissions and meet air quality requirements.
   3. Schedule cleaning and coating application so dust and other contaminants from the cleaning process will not fall on wet, newly coated surfaces.
   4. Any solvent wash, solvent wipe, or cleaner used, including but not limited to those used for surface preparation in accordance with referenced Steel Structures Painting Council (SSPC) specifications, shall be of the emulsifying type which emits no more than 2.8 lb/gal (340 gms/l) VOCs, contains no phosphates, is biodegradable, removes no zinc, and is compatible with the specified coating material. Clean cloths and clean fluids shall be used for solvent cleaning.
   5. Spent blast abrasive shall not be reused.
   6. The compressed air used for blast cleaning or blow down cleaning shall be filtered and shall contain no condensed water or oil. Moisture traps shall be cleaned at least once every four hours or more frequently as required to prevent moisture from entering the supply air to the abrasive blasting equipment.
   7. Oil separators shall be installed just downstream of compressor discharge valves and at the discharge of the blast pot discharges. These shall be checked on the same frequency as the moisture traps.
   8. Regulators, gauges, filters, and separators in good working order shall be in use on all of the compressor air lines to blasting nozzles.
   9. An air dryer or desiccant filter drying unit shall be installed which dries the compressed air prior to blast pot connections. This dryer shall be used and maintained for the duration of all surface preparation work.
   10. A paper blotter test shall be performed to determine if compressed air used for blast cleaning or other purposes on the project is free of moisture and oil. This should be performed two to three times per shift when in operation.
   11. The abrasive blast nozzles used shall be of the venturi or other high velocity type supplied with a minimum of 100 psig air pressure and sufficient volume to obtain the blast cleaning production rates and cleanliness/specified herein.

12. Provide ventilation for airborne particulate evacuation to optimize visibility for both blast cleaning and inspection during surface preparation work.
13. Surface cleanliness of prepared substrates shall be inspected after surface preparation, and prior to application of any coating materials. If steel surfaces are repaired, they shall be re-inspected for surface cleanliness and preparation prior to application of the coating system
14. Test and record substrate pH using pH indicating papers. pH testing frequency should be performed once every 100 square feet of surface area to be coated.
    a. For dry substrate spray the surface lightly with distilled, de-ionized water from a commercially available spray bottle that has been properly rinsed to preclude any dissolved solids. The spray shall wet the surface to a "shiny" appearance and water shall not run down the wall. Wait 60 seconds to allow chemical equilibria to be established and then test the pH of the water on the surface.
15. Measure soluble salt/conductivity in accordance with SSPC Guide 15:
    a. Conduct 5 measurements per each 1000 SF area at locations selected by OWNER and/or Quality Assurance Inspector.
    b. Maximum threshold shall be 70 micro Siemens/cm.
    c. CONTRACTOR shall be responsible to correct substrates not satisfying the maximum threshold at no cost to OWNER.
16. Conduct chloride testing for immersion surfaces:
    a. Conduct 5 measurements per each 1000 SF area at locations selected by OWNER and/or Quality Assurance Inspector.
    b. Conduct chloride testing using a CHLOR*TEST™ kit or approved equivalent.
    c. Maximum chloride threshold shall be no more than 3.0 ppm.
    d. CONTRACTOR shall be responsible to correct substrates not satisfying the maximum threshold at no cost to OWNER.

B. Cleaning, Substrate Decontamination, and Degreasing of substrates to be coated previously exposed to wastewater splash, spillage, or immersion:
1. Degrease the surfaces prior to blast cleaning. Use alkaline cleaning solutions, steam cleaning, or hot water with detergents, followed by rinsing with clean, potable water, and until all traces of degreasing/cleaning solutions have been removed. Thoroughly rinse surfaces degreased with ample clean potable water.
    a. The CONTRACTOR shall be responsible for cleaning only substrates to be coated and not any adjacent surfaces.
2. Decontamination shall consist of high pressure water cleaning or similar means and methods necessary to remove required contaminates to perform Work.
    a. Decontamination must remove all wastewater solids/residues, scum, all debris such as embedded dirt, and all other substances from substrates to be coated.
3. Remove all debris, wastewater constituents, and spent cleaning water from structures and work areas to be coated by pumping, vacuum cleaning or other appropriate means.
    a. Initial cleaning and removal of wastewater solids/residue, scum and debris from the work area will be performed by OWNER. The purpose of initial cleaning is to provide general cleaning to permit access and improve work habitability. Detailed cleaning of elements, crevices or other areas to be coated is not included in OWNER's initial cleaning and shall be the responsibility of the CONTRACTOR.
4. A clean substrate prior to surface preparation is achieved when substrate is free of visible oil, grease, dust, chlorides, and any other foreign material etc. when viewed without magnification.
    a. All Immersion Steel surfaces and related areas shall have all metal surfaces cleaned per SSPC-SP WJ-4/NACE WJ-4 at pressures no less than 34 MPa (5,000 psig) and meet SSPC-SP 1 for cleanliness.

C. Touch-Up Coating
1. When performing touch-up coating work related surface preparation, adhere to CSM recommendations and requirements.

2. At a minimum, remove loose, cracked and poorly adhered coatings. Roughen or abrade all intact well-adhered coatings. Feather all exposed edges of existing coatings at periphery of coating removal areas. Roughen or abrade more aggressively 2 inches beyond existing coating removal areas in all directions or until tightly adhered coating is obtained or reached.

D. Metallic Surfaces:
1. General: Metallic surfaces shall be prepared in accordance with the CSM requirements and applicable portions of the SSPC surface preparation specifications. The following minimum requirements shall apply unless specified otherwise:
   a. The profile depth of the surface to be coated shall generally be 20 to 25 percent of the coating dry film thickness as measured by Method C of ASTM D4417.
   b. Blast particle size shall be selected by the CONTRACTOR to produce the specified surface profile.
   c. All weld splatter, slag and sharp metal burrs shall be removed by grinding or other approved means.
   d. The minimum permissible surface preparation for immersed and/or intermittently immersed ferrous metal substrates shall be SSPC SP-10.
   e. Blast cleaning requirements for ductile iron or cast iron substrates, galvanized steel and non-ferrous substrates shall apply unless specified otherwise by CSM(s):
      1) All ductile or cast-iron surfaces to be coated shall be abrasive blast cleaned to a clean, gray uniform metal appearance free of variations in color and loose materials.
      2) Non-ferrous metals such aluminum and stainless steel shall be sweep/brush blasted and cleaned to produce a clean surface with complete removal of all corrosion products and contaminants.
      3) Galvanized steel shall be sweep/brush blasted and cleaned to produce a clean surface with complete removal of all corrosion products and contaminants.
   f. Remove all traces of grit, dust, dirt, rust scale, corrosion products and/or embedded abrasive from substrate by a combination of vacuum cleaning, compressed air and/or sweeping in accordance with ISO 8502-3 for a rating of 2, or better, before application of coatings.
   g. Acceptable surface preparation must produce a metal surface pH of 6.0 to 9.0 to be confirmed by surface pH testing.
      1) If after surface preparation, the surface pH remains below 6.0, perform additional water blasting or cleaning until additional pH testing indicates an acceptable pH level.
   h. Preparation of carbon steel surfaces shall be based upon comparison with SSPC-VIS1 (ASTM D2200).
   i. Surface cleanliness of prepared substrates shall be inspected after surface preparation, and prior to application of any coating materials. If steel surfaces are repaired, they shall be re- inspected for surface cleanliness and preparation prior to application of the coating system
   j. If, between final surface preparation work and coating system application, contamination of the prepared and cleaned metallic substrates occurs, or if the prepared substrates' appearance darkens or changes color, re-cleaning by water blasting or abrasive blast cleaning shall be required until the specified degree of cleanliness is reclaimed.

E. Concrete Surfaces:
1. Prior to surface preparation Work, ensure concrete substrates are sound with no evidence of surface or underlying deterioration such as spalling, soft material, cracking, erosion, etc. that may require repair or remediation prior to coating preparation Work. Notify OWNER upon discovery. Common methods to identify deterioration include:
   a. Sounding: Using a hammer, chains or similar tools to identify “hollow” sounds which indicate potential areas of deterioration or delamination.

b. Visual Observation.
c. Physical Disturbance: Using tools to disturb the surfaces to identify loose or soft materials.

2. Prior to surface preparation Work, ensure concrete is watertight. Prepare and/or apply CSM recommended hydraulic grout and/or water stop material as required.
3. All concrete surfaces, existing and repaired areas, shall have been cured a minimum of 28 days prior to coating application, unless otherwise approved by CSM(s).
4. Test adhesion of concrete surfaces/substrates prior to application of materials. Perform testing with a DeFelsko PosiTest AT-A adhesion tested with 50mm dollies or approved equivalent. Tests shall be performed every 100 SF, unless otherwise approved by OWNER. Pull tests shall pass a minimum 300 psi. Surfaces/substrates not meeting the required adhesion shall be removed until testing requirements are satisfied at no cost to OWNER. OWNER reserves the right to request additional pull testing upon failure to meet the psi requirements at 1 or more locations.
5. Prepare surfaces to be coated according to coating manufacturer's written instructions for particular substrate conditions and as specified herein.
6. Surface preparation of concrete substrates can be accomplished using methods such as dry abrasive blast cleaning, high, or ultra-high pressure water blast cleaning in accordance with SSPC-SP-13.
   a. Do not micro-fracture or otherwise damage concrete substrate with removal operations.
   b. Concentrate the air jet at cracks, control and construction joints, and repair perimeter interfaces to ensure that contaminants are removed from these crevices.
7. Open up all bug holes and excessive cavities to expose their complete perimeter. Leaving shelled over, hidden air voids beneath the exposed concrete surface will not be acceptable.
   a. Bug holes, excessive cavities, form-tie holes and similar depressions shall be excavated, prepared and/or filled with CSM's specified surface filler or repair material prior to coating application. Ensure substrate is dry prior to application.
8. The selected preparation and cleaning method must produce the requirements set forth below:
   a. A clean substrate free of calcium sulfate, loose coarse or fine aggregate, laitance, loose hydrated cement paste, and otherwise deleterious substances.
   b. A concrete surface pH of 9.0 to 12.0. If after surface preparation, the surface pH remains below 9.0, perform additional water blasting, cleaning, or abrasive blast cleaning until additional pH testing indicates an acceptable pH level.
9. Surface profile shall be verified by means of visual inspection and comparison to ICRI 03732 concrete surface profile chips at least once 50 for every square feet of area to be coated.
10. Prepared surfaces shall be even and/or consistent. Grind flat protrusions and bumps to achieve a consistent texture and eliminate potential locations that may result in low material coverage or result in uneven transitions to the surrounding area concrete.
11. Following quality control inspection of surface preparation by the CONTRACTOR and Quality Assurance Inspection by Quality Assurance Inspector and/or OWNER, thoroughly vacuum clean all concrete surfaces to be coated to remove all loose dirt, and spent abrasive leaving a dust free, sound concrete substrate.
    a. Surface cleanliness of prepared concrete substrates shall be inspected after cleaning, preparation, and/or drying, but prior to application of any coating materials. If concrete surfaces are repaired, they shall be reinspected for surface cleanliness prior to application of the coating system.
    b. If prepared surfaces become contaminated after first cleaning, they shall be cleaned again at the CONTRACTOR's expense prior to applying the coating.

F. Masonry Surfaces:
1. Prepare masonry surfaces in general accordance with concrete surface preparation requirements above, CSM requirements and supplemental requirements below:
   a. Prepare surfaces to remove all chalk, loose dirt, dried mortar splatter, dust, peeling or loose existing coatings, or otherwise deleterious substances to leave a clean, sound substrate.

b. Ensure surfaces are dry prior to coating application.
   1) If pressure washing or low pressure water blast cleaning is used for preparation, allow the masonry to dry for at least 5 days under dry weather conditions at an ambient average temperature of 70ºF.
   2) Coordinate with CSM and Quality Assurance Inspector to determine minimum drying time requirements based on project specific conditions.

G. Fiberglass Reinforced Plastic (FRP) Surfaces:
   1. Prepare FRP surfaces in general accordance with CSM requirements supplemental requirements herein:
   2. Pressure wash to remove dust, dirt, contaminants and other materials.
   3. Prepare surfaces by sanding and/or sweep (brush) blasting to establish uniform surface roughness and to remove any gloss from the resin in the FRP.
   4. Remove existing coatings as specified, that are delaminating and/or do not satisfy CSM requirements for bond strength, performance and/or other performance properties.
   5. Pressure wash to remove all contaminants, debris, etc.
   6. Vacuum clean to remove all loose dust, dirt, and other materials.
   7. Solvent clean using clean white rags and allow solvent to completely evaporate prior to application of any coating materials.

H. Chlorinated Polyvinyl Chloride (CPVC) and Polyvinyl Chloride (PVC) Surfaces:
   1. Prepare PVC and CVPV surfaces in general accordance with CSM requirements supplemental requirements herein:
   2. Pressure wash to remove dust, dirt, contaminants and other materials.
   3. Prepare surfaces by sanding and/or sweep (brush) blasting to establish uniform surface roughness.
   4. Remove existing coatings that are delaminating and/or do not satisfy CSM requirements for bond strength, performance and/or other performance properties.
   5. Pressure wash to remove all contaminants, debris, etc.
   6. Vacuum clean to remove all loose dust, dirt, and other materials.
   7. Solvent clean using clean white rags and allow solvent to completely evaporate prior to application of any coating materials.

I. Wood Surfaces
   1. Prepare wood surfaces in general accordance with CSM requirements supplemental requirements herein:
   2. Ensure surfaces are clean and dry prior to coating application.
   3. Remove surface deposits, sap, protrusions, etc. by scraping or similar means.
   4. Seal knots, pockets, openings, etc. with CSM approved filler material.
   5. Sand rough spots with the grain. Begin with medium grit sandpaper and finish with fine grit sandpaper.
   6. Remove all sanding dust, debris, contaminants and other deleterious materials.
   7. Wipe surfaces clean with clean rags and CSM approved cleaners.

J. Asphalt and Concrete Pavement:
   1. Prepare asphalt and concrete pavements for installation of liquid and/or preformed markings, striping, etc. in accordance with the CSM requirements and requirements herein.
   2. Remove all loose materials, dirt, debris and contaminants with high-pressure water blasting or other suitable means.
   3. Verify surfaces are free of oils and/or other detrimental contaminants that are not compatible with the selected coating systems. Adhere to manufacturer recommended cure times for new asphalt surfaces and/or sealers.

3.6 JOINT AND CRACK TREATMENT

A. Prepare, treat, rout, and fill joints and cracks in substrates per CSM's written recommendations. Before coating surfaces, remove dust and dirt from joints and cracks according to ASTM D4258.

For cementitious waterproofing systems, refer to CSM's specific instructions for crack, joint and similar treatments. Unless otherwise specified by CSM, the following joint and crack treatment methods shall apply (at a minimum):

1. Static Cracks
   a. Fill hairline cracks according to manufacturer's written instructions prior to coating application.
   b. Open cracks up to 1/4- to 3/8-inch wide and 1/4-inch deep:
      1) Clean cracks and surrounding area removing dust, dirt, and other impurities.
      2) Apply crack filler primer, as recommended by CSM, with a brush to obtain uniform coverage and spread approximately 2-inches on each side of cracks.
      3) Fill cracks with crack filler applied with a putty knife or trowel, and allow for shrinkage. If excessive shrinkage occurs, reapply crack filler.
   c. After filler material has cured, apply detail stripe of coating material extending 2-inches to each side of crack, including reinforcing mesh/tape as recommended by the CSM.
2. Movement Joints and Cracks:
   a. Coordinate with OWNER to determine crack nature (static or movement), as required.
   b. Detail coatings at moving joints in accordance with CSM's written instructions.
      1) It is not permitted to bridge coatings with limited elongation and flexibility over moving joints.
   c. Apply joint materials acceptable to CSM. Refer to Section 07900 for concrete joint material specifications and requirements.
3. Notify OWNER if cracks larger than 3/8-inch are located.

B. Allow sealants and/or fillers to cure before proceeding with coating installation.

C. Do not commence coating system installation until CSM, OWNER and/or Quality Assurance Inspector approve the substrate and related conditions as suitable for receiving the coating system.

3.7 APPLICATION

A. General:
   1. Prepare and apply materials according to CSM's written instructions, at recommended rates and coverage's.

B. Workmanship:
   1. Coated surfaces shall be free from runs, drips, ridges, waves, laps, and brush marks. Coats shall be applied so as to produce an even film of uniform thickness completely coating corners and crevices. Coating work shall be performed in accordance with the requirements of SSPC Paint Application Specification No. 1.
      a. Cementitious coating systems shall also be free of cracking, honeycombing and abnormalities. CONTRACTOR shall be responsible to repair and/or replace all locations exhibiting detrimental conditions and/or conditions that are not consistent with the intended material finish at their expense as specified in CSM's written data sheets.
   2. Honor all joints and active movement locations including control joints, expansion joints, material interfaces, etc. Adhere to CSM's requirements for proper preparation, treatment and/or application over these areas.
   3. Equipment shall be designed for application of the materials specified.
   4. Each coat of a coating system shall be applied evenly and sharply cut to line. Care shall be exercised to avoid over spraying or splattering coatings on surfaces not to be coated.
   5. Application Method: Coating applications method can be conventional or airless spray, brush or roller, or trowel based on the permitted coating system application methods, conditions and related considerations.
   6. Allow each coat to cure sufficiently, according to CSM's printed instructions, prior to recoating.
   7. Vary color for each successive coat for all coating systems, unless not viable and/or otherwise approved by OWNER.

8. Perform stripe painting on all edges, angles, weld seams, flanges, nuts, bolts, prior to application of the primer and other coats to ensure proper film build of the coating systems.
9. Cut in edges clean and sharp in accordance with CSM recommendations where work joins other materials or colors.

C. Atmospheric and Substrate Conditions: Apply coating when existing and forecast weather conditions permit coating to be installed according to CSM's written instructions and the following requirements:
1. Surfaces to receive coatings shall be dry excluding cementitious coatings that specifically require saturated conditions. Do not proceed with coating operations until substrates are ready to receive coatings and have been verified by the OWNER and/or Quality Assurance Inspector.
   a. Test prepared surfaces for moisture and other conditions as recommended by CSM.
   b. Test for excess moisture in concrete substrates using the Plastic Sheet Test in accordance with ASTM D4263.
   c. Verify that ambient air and substrate surface temperatures, relative humidity, and dew point are within ranges recommended by CSM prior to and during coating operations.
      1) Measure and record ambient air and substrate temperature at the beginning and end of each shift and once every two hours of each shift using a thermometer.
      2) Measure and record relative humidity at the beginning and end of each shift and every two hours of each shift using a sling psychrometer in accordance with ASTM E337.
2. Coatings shall not be applied over any substrates during rainy, misty weather, or on surfaces upon which there is frost or moisture condensation and when surface temperature is within 10° , or CSM's specified degree, of dew point, unless otherwise permitted by CSM and OWNER.
   a. Atmospheric conditions shall be measured in areas pertinent to coating installation.
   b. During damp weather and/or damp work environments, when the temperature of the surface to be coated is within 10°F of the dew point, heating or forced dehumidification equipment may be used to maintain a minimum temperature of 40°F and 10°F above the dew point for the surfaces to be coated, the coated surface, and the atmosphere in contact with the surface.
      1) Maintain conditions for a period of at least 8 hours or as recommended by the CSM.
      2) CONTRACTOR is responsible to provide dehumidification equipment, fans, and/or heaters inside enclosed and partially enclosed areas where conditions causing condensation are severe to maintain the required atmospheric and surface temperature requirements for proper coating application and cure.
3. Verify application restrictions and constraints for coatings applied over concrete surfaces with rising temperatures or in direct sunlight.
   a. Common coating deficiencies observed in these conditions include bubbling, pinhole formations and blistering.
   b. Coordinate preventative measures with OWNER, such as schedule adjustment, as required.
   c. Repair deficiencies as recommended by the CSM and OWNER at no additional cost to OWNER.
4. Do not apply coatings over substrates and surfaces outside of the CSM's recommended minimum and maximum substrate temperatures for application during any point of time during application.
5. Spray painting shall not be permitted when wind velocities at Work location are greater than 20 MPH.
6. Work accomplished under unfavorable substrate and/or weather conditions will be considered unacceptable and complete re-cleaning and recoating of these areas will be required at the CONTRACTOR's expense.

D. Mixing:
   1. Mix standard coating materials in strict accordance with CSM instructions with specified mixers and tools to achieve uniform, smooth consistency. Do not thin or dilute unless permitted by CSM; use recommended thinners within recommended limits.
      a. Stir as required during application.
      b. If surface film forms, do not stir film into material. Remove film and strain coating material before using.
      c. Dispose of mixed materials that have exceeded the CSM's recommended pot-life.
      d. Maintain containers used for mixing and applying coating in clean condition, free of foreign materials and residue.
   2. Mix cementitious coating systems in strict accordance with CSM instructions. Strictly adhere to recommended mixing equipment, mixing durations, atmospheric and other requirements. Consider material volumes required for efficient/continuous application based on the size, configuration and/or restrictions associated with the Work and CSM's requirements.

E. Coating Film Thickness, Continuity and Quality:
   1. Coating system thickness is the total thickness of all materials to be applied as part of the system including the primer, stripe, intermediate and finish coats.
      a. Verify DFT for each coat over concrete surfaces once for every 100 square feet of surface area using a Positector 6000 DFT Gauge, or equivalent.
      b. Verify DFT for each coat over non-ferrous surfaces once for every 50 square feet of surface area using a Positector 200 DFT Gauge, or equivalent.
      c. Verify DFT for each coat over metallic surfaces once for every 50 square feet of surface area in accordance with SSPC-PA-2 using magnetic gages for ferrous metal.
      d. Following quality control inspections, OWNER and/or Quality Assurance Inspector shall verify thickness of each coat.
   2. The surface area covered per gallon of coating for various types of surfaces shall not exceed those recommended by the CSM.

F. Application:
   1. Apply coating by roller, spray, brush and/or trowel as recommended by the CSM. Use applicator and technique best suited for the substrate, coating material and conditions.
      a. Apply materials as soon as practicable after completion of surface preparation or recommended curing of previous material application as recommended by CSM to satisfy recoat windows.
      b. Do not exceed recommended pot life of material.
      c. Apply stripe coats by brush application only, unless otherwise permitted by CSM and Quality Assurance Inspector.
         1) Stripe coat all edges, corners, crevices, welds, nuts, bolts, irregular surfaces, etc. to ensure minimum dry film thickness is achieved in accordance with SSPC-PA Guide 11. Stripe coat shall not be spray applied.
         2) Stripe coat shall extend 1-inch (minimum) from each edge of surfaces to be stripe coated.
      d. Do not coat over conditions detrimental to formation of durable coating film, such as dirt, rust, scale, grease, or moist or scuffed surfaces.
      e. Apply primer and/or finish coats in one, or two coats, to provide specified thickness or recommended CSM thickness, whichever is greater. Do not apply subsequent coats until previous coat has fully cured and/or as recommended by CSM. Select application method to avoid excessive coating thickness.
         1) If undercoats or other conditions show through final coat, apply additional coats until coating film is of uniform finish, color, and appearance, if approved by CSM and OWNER.
         2) Ensure that edges, corners, and crevices receive minimum dry film thickness.

3) Brush Application: Work material into surface in even film. Eliminate cloudiness, spotting, holidays, laps, brush marks, runs, sags, ropiness, or other surface imperfections. Neatly draw lines at edges and color breaks.
4) Roller Application: Keep cover wet; do not dry roll. Apply material in sections. Lay on required amount of material, working material into grooves and rough areas. Then level material, working it into surface.
5) Spray Application: Use spray application only when permitted by CSM's written instructions and authorities having jurisdiction. Apply material to provide equivalent hiding of brush-applied coat. Do not double back, building up film thickness of two coats in one application.
6) All dry spray shall be removed, by sanding if necessary. In areas of deficient primer thickness, the area shall be thoroughly cleaned with power washing equipment, as necessary to remove all dirt; the area shall then be wire brushed, vacuumed and recoated.
7) Cure cementitious materials as recommended by CSM and/or as required to mitigate drying shrinkage cracking and/or other deficiencies.
   a) Do no patch, repair, overlay, disturb and/or otherwise alter finish coats of cementitious materials prior to review by the Quality Assurance Inspector.
8) All areas coated with impure, unsatisfactory or unauthorized coating material, or coated in an unworkmanlike or objectionable manner, shall be thoroughly cleaned and recoated or otherwise corrected as directed by CSM, OWNER and/or Quality Assurance Inspector.

f. Special Conditions:
1) Asphalt and Concrete Pavement Markings and Striping:
   a) Install markings, striping and/or other pavement coating systems in accordance with CSM requirements and requirements herein.
   b) Ensure substrates and surfaces are dry, clean and free of loose materials, debris, contaminants, etc. prior to application unless otherwise permitted by CSM.
   c) Apply within CSM's specified ambient and/or substrate surface temperature ranges for coating system to be applied.
   d) Pre-heat and/or pre-treat substrate surfaces in accordance with CSM's specifications and requirements.
   e) Utilize stencils, string lines, pins, shapes and/or other appropriate layout and measuring tools, methods and techniques to ensure markings, lines, striping and/or other shapes are installed to the appropriate line and position.
   f) Utilize manufacturer recommended equipment and application techniques for the selected coating system and/or materials to be applied.
2) Non-Skid Surfaces:
   a) Aggregate may be incorporated into topcoat applications when a walking nonskid surface is preferred. Non-Skid tape may also be applied.
3) Use of Sealant:
   a) When intermittent welding is used to attach unistrut, angles, brackets, structural members, etc. in an outdoor location or corrosive environment, the crevices at the joint, if 3/16-inch or less, may be filled with a sealant compatible with the coating system prior to coating to effectively seal the concealed area from air and moisture penetration.

3.8 FINAL INSPECTION

A. Perform a final inspection to determine whether coating system Work meets the requirements of the Contract Documents. OWNER, OWNER's designated representative and/or Quality Assurance Inspector will subsequently conduct a final inspection with the CONTRACTOR.

Any rework required shall be marked. Such areas shall be recleaned and repaired as specified herein or as recommended by the CSM and/or OWNER at no additional cost to OWNER.

TABLE 1: QUALITY ASSURANCE TESTING

TEST / INSPECTION	STANDARD / METHOD	SUBSTRATE	SCHEDULE	FREQUENCY	ACCEPTANCE CRITERIA
Substrate Adhesion	ASTM D7234	Concrete ; CMU	Prior to coating application	1 test / 100 SF	≥ 300 psi
Ultrasonic Thickness	ASTM E213	Ferrous Metal	After surface preparation	As required	Varies
Sharp Edges, Weld Platter, Slivers, Etc.	Visual	Ferrous Metal	Prior to coating application	All	All defects shall be addressed
pH	pH Indicating Paper or Equal	Concrete ; CMU	After surface preparation ; Prior to coating application	5 tests / 1000 SF	9.0 – 12.0
pH	pH Indicating Paper or Equal	Ferrous Metal	After surface preparation ; Prior to coating application	5 tests / 1000 SF	6.0 – 9.0
Soluble Salt / Conductivity	SSPC Guide 15	Ferrous Metal (Immersion & Intermittent Immersion)	After Surface Preparation ; Prior to Coating Application	5 test / 1000 SF (or) 3 tests / element (Whichever is greater)	30 µS/cm
Soluble Salt / Conductivity	SSPC Guide 15	Ferrous Metal (Atmospheric)	After Surface Preparation ; Prior to Coating Application	5 test / 1000 SF (or) 3 tests / element (Whichever is greater)	70 µS/cm
Chlorides	CHLOR*TEST™	All (Immersion & Intermittent Immersion)	After Surface Preparation ; Prior to Coating Application	5 tests / 1000 SF	3.0 ppm
Chlorides	CHLOR*TEST™	All (Atmospheric)	After Surface Preparation ; Prior to Coating Application	5 tests / 1000 SF	5.0 ppm
Surface Cleanliness	SSPC-VIS1 ; ISO 8502-3	Steel	Prior to coating application	All	No Defects
Surface Cleanliness	Visual	Ductile Iron ; Cast Iron	Prior to coating application	All	No Defects
Surface Cleanliness	Visual	Concrete ; CMU ; All Other	Prior to coating application	All	No Defects
Surface Profile	ASTM D4417 ; SSPC SP Guidelines	Ferrous Metal	Prior to coating application	1 test / 25 SF	Per CSM and/or Project Requirements
Surface Profile	ICRI 03732 - CSP Chips	Concrete ; CMU	Prior to coating application	1 test / 50 SF	Per CSM and/or Project Requirements
Moisture (Plastic Sheet)	ASTM D4263	Concrete ; CMU	Prior to coating application	1 test / 500 SF	No moisture
Wet Film Thickness	ASTM D4414	All	All	1 test / 50 SF	Per CSM and/or Project Requirements
Dry Film Thickness	ASTM D7091 ; SSPC-PA-2	Ferrous and Non-Ferrous Metal	After each coat applied ; After final coat	1 test / 50 SF	Per CSM and/or Project Requirements
Dry Film Thickness	ASTM D6132	Concrete ; CMU ; Wood ; Plastic ; FRP ; Etc.	After each coat applied ; After final coat	1 test / 100 SF (concrete) ; 1 test / 50 SF (other)	Per CSM and/or Project Requirements
Coating Adhesion	ASTM D4541	Ferrous Metal	After each coat applied ; After final coat	3 test / element (or) 1 test / 500 SF (Whichever is greater)	≥ 300 psi
Coating Adhesion	ASTM D7234	Concrete	After each coat applied ; After final coat	3 test / element (or) 1 test / 500 SF (Whichever is greater)	≥ 300 psi
Coating (Visual) [Curing / Contamination / Solvent Retention / Pinholes / Sagging / Defects	Visual	All	After each coat applied ; Prior to application of next coat	All	No observed defects
Holiday Detection	ASTM D5162	Ferrous Metal	Following System Application	All	No observed defects
Holiday Detection	ASTM D4787	Concrete	Following System Application	All	No observed defects

TABLE 2: COLOR SHADE CODE

COLOR SHADE	U.S. GOVERNMENT FEDERAL REGISTER 595 PAINT COLOR NUMBER
Aluminum	17178
Black	17038
Blue	15050
Brown	10091
Gray, Dark	26132
Gray, Light	16473
Green, Dark	14062
Green, Light	14533
Orange	12246
Red	11105
White	17875
Yellow	13655

TABLE 3: EQUIPMENT AND PIPING COLOR IDENTIFICATION CODE

EQUIPMENT AND PIPING COLOR IDENTIFICATION CODE			
UNIT PROCESS	**FLOW**	**COLOR**	**ABBREVIATION**
	Non Potable Water	Lt. Green	NPW
	Non Potable Well Water	Lt. Green	NPWW
	Potable Water	Dk. Green	PW
	Drain	Lt. Gray	DRAIN
	Interceptor Pump Station	Dk. Gray	
	Drainage Pump Station Discharge	Lt. Gray	DPSD
	Electrical Conduit	Red	
	Fire Protection	Red	FIRE
	Floor Drain	Lt. Gray	FD
	Fuel Oil	Black	FO
	Fuel Oil Supply	Black	FOS
	Fuel Oil Return	Black	FOR
	Hot Water Supply	Lt. Green	HWS
	Hot Water Return	Lt. Green	HWR
	Hot Water Reverse Return	Lt. Green	HW REV RET
	HVAC	Lt. Gray	HVAC
	Hydraulic Oil	Black	HDO
	Hot Potable Water	Dk. Green	HPW
	Lube Oil	Black	LO
	Natural Gas	Yellow	NAT GAS
	Polymer Dry Air	Blue	DA
	Process Drain	Lt. Gray	DRAIN
	Propane	Yellow	LP
	Roof Drain	Lt. Gray	RD
	Seal Water	Lt. Green	SW
	Service Air (Low Pressure)	Blue	LPSA
	Service Air (High Pressure)	Blue	HPSA
	Sanitary Drain	Lt. Gray	DRAIN
	Sanitary Sewer Force Main	Lt. Gray	SSFM
	Spray Water	Lt. Green	SPRAY
	Steam	Aluminum	STEAM
	Storm Drain	Lt. Gray	STORM
	Sump Pump Discharge	Lt. Gray	SPD
	Tank Drain	Lt. Gray	DRAIN
	Vacuum	Blue	VAC
	Vent	Lt. Gray	V
Odor Control	Odorous Air	Lt. Gray	OA
	Scrubber Blowdown	Orange	SBD
	Scrubber Chemical Feed	Orange	SCF
	Scrubber Recirculation Cleaning	Orange	SRC
	Scrubber Recirculation Discharge	Orange	SRD
	Scrubber Recirculation Suction	Orange	SRS
	Scrubber Drain	Lt. Gray	DRAIN
	Scrubber Exhaust	Lt. Gray	SCRUB EXH
	Scrubber Intake	Lt. Gray	SCRUB INTK
	Scrubber (vessel)	Lt. Gray	---
Preliminary Treatment	Cyclone Influent	Lt. Gray	CYCL INF
	Cyclone Recycle	Lt. Gray	CYCL RCY
	Grit	Lt. Gray	GRIT

	Raw Wastewater Influent	Lt. Gray	RWI
	Screened Effluent	Lt. Gray	SE
	Septic Tank Unloading	Lt. Gray	SEPTIC UNLDG
Primary Treatment	Primary Clarifier Influent	Lt. Gray	PCI
	Primary Clarifier Effluent	Lt. Gray	PCE
	Primary Clarifier Solids	Brown	PCS
	Primary Scum	Lt. Gray	SCUM
Intermediate Treatment	Oxidation Tower Influent	Lt. Gray	OTI
	Oxidation Tower Effluent	Lt. Gray	OTE
	Intermediate Clarifier Influent	Lt. Gray	ICI
	Intermediate Clarifier Effluent	Lt. Gray	ICE
	Intermediate Biosolids	Brown	INS
	Intermediate Scum	Lt. Gray	SCUM
Biological Treatment	Aerated Supernatant Return		ASR
	Anaerobic Influent	Lt. Gray	ANI
	Anaerobic Effluent	Lt. Gray	ANE
	Anoxic Influent	Lt. Gray	AXI
	Anoxic Effluent	Lt. Gray	AXE
	Anoxic Recycle	Lt. Gray	ARCY
	Aeration Influent	Lt. Gray	ARI
	Aeration Effluent	Lt. Gray	ARE
	Mixed Liquor	Brown	MLSS
	Nitrified Recycle	Lt. Gray	NRCY
	Secondary Clarifier Influent	Lt. Gray	SCI
	Secondary Clarifier Effluent	Lt. Gray	SCE
	Secondary Scum	Lt. Gray	SCUM
	Return Activated Solids	Brown	RAS
	Waste Activated Solids	Brown	WAS
Disinfection	Contact Tank Effluent	Lt. Gray	CTE
	Contact Tank Scum	Lt. Gray	SCUM
Effluent Pumping	Final Effluent	Lt. Gray	FNE
	Holding Pond Drain	Lt. Gray	DRAIN
Scum Disposal	Feed Scum	Lt. Gray	FD SCUM
	Concentrated Scum	Lt. Gray	CN SCUM
	Scum Concentrator Subnatant	Lt. Gray	SCB
	Scum	Lt. Gray	SCUM
Solids Thickening	Decant Supernatant Return	Lt. Gray	DSR
	Decant Tank Drain	Lt. Gray	DRAIN
	Flotation Thickener Feed Solids	Brown	FTFS
	Flotation Thickener Recycle	Lt. Gray	FTRCY
	Flotation Thickened Solids	Brown	FTS
	Flotation Thickener Subnatant	Lt. Gray	FSB
	Gravity Belt Thickener Feed Solids	Brown	GBFS
	Gravity Belt Thickener Filtrate	Lt. Gray	GBFL
	Gravity Belt Thickened Solids	Brown	GBTS
	Gravity Thickener Feed Solids	Brown	GTFS
	Gravity Thickened Solids	Brown	GTS
	Gravity Thickener Overflow/Supernatant	Lt. Gray	GSP
Digestion	Primary Digester Feed Solids	Brown	PDFS
	Primary Digested Solids	Brown	PDS
	Digester Recirculation Solids	Brown	DRS
	Primary Digester Supernatant	Lt. Gray	PDSP
	Primary Digester Transfer Solids	Brown	PDXS

	Secondary Digested Solids	Brown	SDS
	Secondary Digester Supernatant	Lt. Gray	SDSP
	Digester Gas	Yellow	DGAS
Solids Holding Tank	Holding Tank Feed Solids	Brown	HTFS
Solids Conditioning	Conditioning Tank Feed Solids	Brown	CNFS
Solids Dewatering	Centrifuge Feed Solids	Brown	CFS
	Centrifuge Biosolids Cake	Brown	CCK
	Centrifuge Centrate	Lt. Gray	CCT
	Centrifuge Thickened Biosolids	Brown	CTS
	Centrifuge Thickening Centrate	Lt. Gray	CTCT
	Foreign Biosolids Loading	Brown	FLS
	Foreign Biosolids Unloading	Brown	FUS
Solids Incineration	Incinerator Feed Cake	Brown	IFC
	Incinerator Ash	Brown	ASH
	Incinerator Scrubber Water Effluent	Lt. Gray	ISE
	Scrubber Intake	Lt. Gray	SI
	Scrubber Exhaust	Lt. Gray	SE
Nitrification Enhancement Facility	Nitrification Enhancement Facility Influent	Lt. Gray	NEFINF
	Nitrification Enhancement Facility Aeration Effluent	Brown	NEFARE
	Nitrification Enhancement Facility Secondary Effluent	Brown	NEFSCE
	Nitrification Enhancement Facility Solids	Brown	NEFS
Chemicals	Acid Wash Supply	Orange	AWS
	Acid Wash Return	Orange	AWR
	Alum	Orange	ALUM
	Ammonia	Orange	AMMONIA
	Caustic	Orange	CAUSTIC
	Caustic Solution	Orange	CAUSTIC SOL
	Dry Polymer	Orange	DPOLY
	Ferric/Ferrous	Orange	FERRIC/FERROUS
	Hydrogen Peroxide	Orange	PEROXIDE
	Liquid Polymer	Orange	LPOLY
	Muriatic	Orange	MURIATIC
	Polymer Solution	Orange	POLY SOL
	Sodium Bisulfite	Purple	BISULFITE
	Sodium Bisulfite Solution	Orange	BISULFITE SOL
	Sodium Hypochlorite	Orange	HYPO
	Sodium Hypochlorite Solution	Orange	HYPO SOL
Chemical Storage Tanks	Chemical Tanks	Lt. Gray OR White	(Name of Chemical)
Bollards		Yellow	---
Water Reclamation	Reclaimed Water Main	Purple	RWM
Misc.	Abandoned		ABAND
	Sample	Unit Process Color	(Unit Process Name)/SAMP

CHECKLIST 1: CONCRETE COATING

Project	
Inspector	
Task	
Location	

Quality Assurance Hold points are indicated in Bold

Date	Initials	Task
_____	_____	**1. Required submittals have been provided to OWNER for review and have been accepted.**
_____	_____	**2. Existing conditions, surfaces and related items relevant to work tasks have been examined and accepted. Deficiencies, obstructions, abnormalities and/or constraints have been communicated to OWNER and appropriately resolved.**
_____	_____	3. CSM has reviewed substrates, environmental and operating conditions. CSM has verified selected coating system is suitable for application.
_____	_____	4. OWNER property including, but not limited to, equipment, components, structures, etc. have been adequately protected.
_____	_____	**5. Required mockups have been applied, reviewed, and approved by Quality Assurance Inspector.**
_____	_____	**6. Newly placed concrete and/or cementitious surfaces have been cured a minimum of 28 days unless specified otherwise permitted by CSM. Validation of suitable substrate conditions have been tested per appropriate industry standards, recognized by the CSM and documentation has been provided to OWNER for review.**
_____	_____	**7. Quality Assurance Inspector has conducted requisite number of substrate adhesion tests. Adhesion satisfies requirements as specified in the Contract Documents.**
_____	_____	**8. Quality Assurance Inspector has verified concrete surface preparation meets ICRI CSP and CSM requirements as specified in the Contract Documents.**
_____	_____	**9. Quality Assurance Inspector has conducted requisite number of soluble salt/conductivity and chloride testing. Testing satisfies requirements as specified in the Contract Documents.**
_____	_____	**10. Quality Assurance Inspector has verified pH satisfies requirements as specified in the Contract Documents.**
_____	_____	**11. Quality Assurance Inspector has verified degree of surface cleanliness satisfies requirements as specified in the Contract Documents.**
_____	_____	12. Static cracks have been prepared, treated, routed, and filled as specified in the Contract Documents and per the CSM's requirements.
_____	_____	**13. Moving cracks have been identified and an RFI has been submitted to OWNER for review and recommendations as required.**
_____	_____	14. Control joints, expansion joints, movement joints/cracks and related items have been prepared and appropriate joint filler(s) have been installed as specified in the Contract Documents and CSM Requirements.

_____ _____ 15. Bug holes and surface imperfections have been filled with the appropriate surfacer, crack filler and/or other material and cove joints have been installed as specified in the Contract Documents and per the CSM's requirements.

_____ _____ 16. Additional pre-coating tasks have been performed.

_____ _____ 17. Substrates are visibly dry and passed manufacturer recommended moisture test, with no visible condensation (unless specifically permitted by CSM).

_____ _____ **18. Final substrate conditions and preparations have been reviewed by the CSM and/or Quality Assurance Inspector.**

_____ _____ **19. Batch information, shelf life, storage conditions and related items for materials to be applied have been reviewed by the Quality Assurance Inspector.**

_____ _____ 20. Ambient and surface temperature, relative humidity, weather conditions, substrate and materials are within specified limits. Conditions related to wind have been reviewed to prevent overspray damage to nearby equipment, vehicles, etc.

_____ _____ 21. Mixing and application equipment and tools have been tested and verified to be in good working order.

_____ _____ 22. Mix and prepare coating materials according to CSM's written instructions.

_____ _____ **23. Quality Assurance Inspector has verified surfacer, primer, base or finish coat application.**

_____ _____ **24. Quality Assurance Inspector has performed requisite number of wet film, adhesion and/or dry film thickness (DFT) tests. Coating has been reapplied to test locations and touch-up repairs are complete.**

_____ _____ 25. Surfacer, primer or base coat has been prepared per Contract Documents and CSM Requirements and ready to receive primer, base, intermediate or finish coat within specified recoat period.

_____ _____ **26. Batch information, shelf life, storage conditions and related items for materials to be applied have been reviewed by Quality Assurance Inspector.**

_____ _____ **27. Quality Assurance Inspector has verified surface preparation and degree of cleanliness.**

_____ _____ 28. Ambient and surface temperature, relative humidity, weather conditions, substrate and materials are within specified limits. Conditions related to wind have been reviewed to prevent overspray damage to nearby equipment, vehicles, etc.

_____ _____ 29. Mixing and application equipment and tools have been tested and verified to be in good working order.

_____ _____ 30. Primer, base, intermediate and/or finish coat is mixed and applied per Contract Documents and CSM Requirements.

_____ _____ **31. Quality Assurance Inspector has performed requisite number of wet film, adhesion and/or dry film thickness (DFT) tests. Coating has been reapplied to test locations and touch-up repairs are complete.**

_____ _____ **32. Quality Assurance Inspector has performed holiday testing.**

_____ _____ **33. Coated surfaces have been installed per Contract Documents and CSM requirements and accepted by Quality Assurance Inspector.**

_____ _____ **34. Refer to steps 25 through 31 for subsequent applications.**

CHECKLIST 2: FERROUS METAL COATING

Project	
Inspector	
Task	
Location	

Quality Assurance Hold points are indicated in Bold

Date	Initials	Task
_____	_____	**1. Required submittals have been provided to OWNER for review and have been accepted.**
_____	_____	**2. Existing conditions, surfaces and related items relevant to work tasks have been examined and accepted. Deficiencies, obstructions, abnormalities and/or constraints have been communicated to OWNER and appropriately resolved.**
_____	_____	**3. CSM has reviewed substrates, environmental and operating conditions. CSM has verified selected coating system is suitable for application.**
_____	_____	4. OWNER property including, but not limited to, equipment, components, structures, etc. have been adequately protected.
_____	_____	**5. Required mockups have been applied, reviewed, and approved by Quality Assurance Inspector.**
_____	_____	**6. Quality Assurance Inspector has performed ultrasonic thickness (UT) testing (as required).**
_____	_____	**7. Required steel repairs have been performed and prepared for coating (as required). Repairs have been verified by Quality Assurance Inspector.**
_____	_____	**8. Quality Assurance Inspector has conducted requisite number of soluble salt/conductivity and chloride testing. Testing satisfies requirements as specified in the Contract Documents.**
_____	_____	**9. Quality Assurance Inspector has verified pH satisfies requirements as specified in the Contract Documents.**
_____	_____	**10. Quality Assurance Inspector has verified surface preparation meets SSPC and CSM requirements as specified in the Contract Documents.**
_____	_____	**11. Quality Assurance Inspector has verified degree of surface cleanliness meets SSPC and CSM requirements as specified in the Contract Documents.**
_____	_____	12. Joints, bridges and transition requiring sealant or other work has been addressed (as required).
_____	_____	13. Additional pre-coating tasks have been performed.
_____	_____	14. Substrates are visibly dry and free of laitance.
_____	_____	**15. Final substrate conditions and preparations have been reviewed and approved by the CSM and/or Quality Assurance Inspector.**
_____	_____	**16. Batch information, shelf life, storage conditions and related items for materials to be applied have been reviewed by Quality Assurance Inspector.**
_____	_____	17. Ambient and surface temperature, relative humidity, weather conditions, substrate and materials are within specified limits. Conditions related to wind have been reviewed to prevent overspray damage to nearby equipment, vehicles, etc.

_____ _____ 18. Mix and prepare coating materials according to CSM's written instructions.

_____ _____ **19. Quality Assurance Inspector has verified primer, stripe, base or finish coat application.**

_____ _____ **20. Quality Assurance Inspector has performed requisite number of wet film, adhesion and/or dry film thickness (DFT) tests. Coating has been reapplied to test locations and touch-up repairs are complete.**

_____ _____ 21. Primer, base or intermediate coat has been prepared per Contract Documents and CSM Requirements and ready to receive stripe, base, intermediate or finish coat within specified recoat period.

_____ _____ **22. Batch information, shelf life, storage conditions and related items for materials to be applied have been reviewed by Quality Assurance Inspector.**

_____ _____ 23. **Quality Assurance Inspector has verified surface preparation and degree of cleanliness.**

_____ _____ 24. Ambient and surface temperature, relative humidity, weather conditions, substrate and materials are within specified limits. Conditions related to wind have been reviewed to prevent overspray damage to nearby equipment, vehicles, etc.

_____ _____ 25. Stripe, base, intermediate and/or finish coat is mixed and applied per Contract Documents and CSM Requirements.

_____ _____ **26. Quality Assurance Inspector has performed requisite number of wet film, adhesion and/or dry film thickness (DFT) tests. Coating has been reapplied to test locations and touch-up repairs are complete.**

_____ _____ **27. Quality Assurance Inspector has performed holiday testing.**

_____ _____ **28. Coated surfaces have been installed per Contract Documents and CSM requirements and accepted by Quality Assurance Inspector.**

_____ _____ **29. Refer to steps 21 through 26 for subsequent applications.**

END OF SECTION

END OF SECTION

SECTION 13110

CATHODIC PROTECTION SPECIFICATION

PART 1. GENERAL

1.1 SUMMARY

A. The work included under this section includes providing all labor, materials, equipment, tools, and incidentals required for the installation of a complete corrosion control system.

B. The Contractor shall be responsible for the procurement, installation, testing, and commissioning of the corrosion control system as specified in this section.

C. The corrosion control system shall consist of the following major components:

1. Basic Corrosion Monitoring System:

   The Contractor shall install and test a system for the monitoring of corrosion potential on the installed pipeline. Provision of the basic corrosion monitoring system will be considered a part of the bid package, and will be included in the Contractor's unit price for pipe material and installation.

2. Galvanic Anode Cathodic Protection System:

   The Contractor shall procure and install a galvanic anode cathodic protection system according to these specifications, plans, and details. The installation of the galvanic anode system will be considered a part of the bid package, and will be included in the Contractor's unit price for pipe material and installation.

D. Reference Standards

The following is a list of standards which may be referenced in this section:

1. ASTM International (ASTM):

   a. B843, Standard Specification for Magnesium Alloy Anodes for Cathodic Protection

   b. G97, Standard Test Method for Laboratory Evaluation of Magnesium Sacrificial Anode Test Specimens for Underground Applications.

   c. STP 741, Underground Corrosion, a Statistical Probability Method for Soil Resistivity Determination.

   d. G57, Standard Test Method for Field Measurement of Soil Resistivity Using the Wenner Four-Electrode Method.

   e. C94, Standard Specification for Ready-Mixed Concrete.

   f. C31, Standard Practice for Making and Curing Concrete Test Specimens in the Field

   g. C39, Standard Test Method for Compressive Strength of Cylindrical Concrete Specimens

h. A48 Class 25, Standard for Gray Iron Castings.

i. B418, Standard Specification for Cast and Wrought Galvanic Zinc Anodes.

2. National Fire Protection Association (NFPA): 70, National Electrical Code (NEC).

3. National International (NACE) SP0169 – Corrosion Control of Underground Pipelines.

4. National Electrical Manufacturer Association (NEMA) WC 70, Power Cables Rated 2000 Volts or Less for the Distribution of Electrical Energy

5. US Department of Transportation (DOT) H-20, Load Rating Designations

6. American Water Works Association (AWWA) C110, Ductile-Iron and Gray-Iron Fittings.

1.2 SUBMITTALS

A. Action Submittals

1. Manufacturer's data, including catalog information, material specification, and other information for products to be used.

2. Layout of the basic corrosion monitoring system shall be included with pipeline shop drawings or lay schedule.

3. Corrosion specialist qualifications. The Contractor shall submit the credentials of the proposed cathodic protection or corrosion specialist as part of the shop drawing review process.

B. Informational Submittals

1. Compliance Statement: provide compliance statement that galvanic anode composition meets chemical requirements specified herein.

2. Field test reports to be completed and submitted to Owner with 14 calendar days of testing.

1.3 DELIVERY, STORAGE, AND HANDLING

A. Packing and Shipping: provide anodes and reference electrodes packaged in a plastic or heavy paper bag of sufficient thickness to protect backfill, and cloth bag during normal shipping and handling.

B. Store prepackaged anodes off the ground to keep them dry. Protect against weather, condensation, and mechanical damage. Immediately remove wet or mechanically damaged prepackaged anodes from site. Handle anodes with care to prevent loss of backfill material. Do not lift or hold anodes by lead wire.

1.4 DEFINITIONS

A. Ferrous Metal Pipe: pipe made of steel or iron, and pipe containing steel or iron as a principle structural material.

B. Lead, Lead Wires, Joint Bonds, Cable: insulated copper conductor; the same as wire.

C. NACE: NACE International

D. CPS: Cathodic Protection or Corrosion Specialist

E. CP: Cathodic Protection

F. AWG: American Wire Gauge, standardized wire gauge system

G. ANSI: American National Standards Institute

H. HMWPE: High Molecular Weight Polyethylene, type of wire insulation.

I. THWN: Thermoplastic Heat and Water-resistant Nylon-coated, type of wire insulation.

J. RHH-RWH: Rubber insulation and heat resistant, type of wire insulation.

PART 2. PRODUCTS

2.1 BASIC CORROSION MONITORING SYSTEM

A. Wires

1. Conform to applicable requirements of NEMA WC 70.

2. Joint Bond:

a. General:

1) Stranded copper wire with 600-volt HMWPE insulation. Supply joint bonds complete with formed copper sleeve on each end of wire.

b. DIP:

1) Wire size for bonding joints shall be as follows:

	Main Size	Wire Size
a)	Main Size	Wire Size
b)	Larger than 36 inches	AWG #2 HMWPE
c)	16 inches to 36 inches	AWG #4 HMWPE
d)	12 inches to small	AWG #6 HMWPE

c. Steel Pipe:

1) Push-On, Mechanical, or Flanged Joints:

a)	18-inches long	#4 AWG wires

2) Flexible Coupling Joints:

a)	24-inches long	#4 AWG wires

3. Anode Header Cable: single-conductor, #8 AWG stranded copper wire with 600-volt HMWPE insulation.

4. Insulation Colors:

   a. Galvanic Anodes: red

   b. Pipeline Test Wires: black (new pipeline) and white (existing pipeline)

   c. Reference Electrodes: blue

   d. Insulated Joints: as shown

B. Cathodic Protection Test Station

1. Flush Mounted:

   a. All test stations shall be flush mounted type unless otherwise shown on project drawings. The test box shall pass US DOT H-20 roadway load test.

2. Raised Test Station:

   a. When test station is out of the road, use a green riser protected by bollards. Cathodic protection monitoring stations shall be a non-metallic post-type station mounted on a non-metallic conduit post, Cott Big Fink® or equal, 5 terminals and 3 terminals.

   b. The test station shall be constructed as follows:

      1) Terminal Board: Polycarbonate Lexan plastic.
      2) Terminal Posts: Nickel-plated marine brass (5 terminal)
      3) Conduit Post: Green, 3-inch diameter UV stabilized polyethylene.

3. Test Station Wires:

   a. Stranded conductor, #10 AWG stranded copper with 600-volt rated THWN insulation. Wires shall be color coded per Section 2.01 A.4.b. of this document.

C. Buried Reference Electrodes

Prepackaged Copper-Copper Sulfate Reference Electrodes:

1. Material: permanent type, copper-copper sulfate reference electrode suitable for direct burial with a minimum design life of 30 years. Electrode shall be prepackaged in a cloth bag containing a low resistivity backfill.

2. Wire: #14 AWG stranded copper wire with blue, 600-volt HMWPE or RHH-RWH insulation. Wire shall be attached to electrode and insulated with manufacturer's standard connection. Connection shall be stronger than the wire. No splicing of the reference electrode lead wire shall be permitted under any circumstances.

3. Acceptable Manufactures:

   a. Borin Manufacturing; model SRE-007-CUY.

   b. Electrochemical Devices, Inc.; model UL50-CUG-CW.

   c. GMC Electrical, Inc.; model CU-1-UGPC.

D. Thermite Weld Materials

1. General:

   a. Thermite wire sleeves, welders, and weld cartridges according to manufacturer's recommendations for each wire size, pipe or fitting size, and material.

   b. Welding materials and equipment shall be the product of a single manufacturer. Interchanging materials of different manufacturers will not be acceptable.

2. Molds: graphite. Ceramic "One-Shot" molds are not acceptable.

3. Cartridges:

   a. General:

      1) Maximum cartridge size as recommended by manufacturer

   b. DIP:

      1) Cast-iron thermite-weld cartridges for cast and ductile iron pipe and fittings.

   c. Steel Pipe:

      1) Carbon steel thermite weld cartridges for steel pipe and fittings.

4. Welding Materials Manufacturers:

   a. Erico Products Inc. (Cadweld), Cleveland, OH.

   b. Continental Industries, Inc. (Thermo-Weld), Tulsa, OK.

5. Thermite Weld Caps:

   a. Prefabricated weld cap with coating and suitable primer.

   b. Handy Cap II with Royston Primer 747, as manufactured by Royston Laboratories, Inc.

   c. Equivalent approved by HRSD.

E. AC Ground Mat

1. Zinc ribbon anodes shall be 1/2-inch x 9/16-inch in accordance with the specific project requirements.

2. The anode shall be continuously extruded over a steel wire core of 0.13-inch centrally located in the zinc alloy.

3. The zinc alloy shall meet the requirements of ASTM B418, Type II.

F. Ancillary Materials

1. Compression Connectors:

a. For in-line, tap, and multi splice compression connectors furnish “C” taps made of conductive wrought copper, sized to fit wires being spliced.

b. Manufacturer and Product: Burndy; type YC, or equivalent.

2. Ring Terminal Wire Connectors: one-piece, tin-plated crimp-on lug connector as manufactured by Burndy Co., Thomas and Betts, or equivalent.

3. Splicing Tape: linerless rubber high-voltage splicing tape suitable for moist and wet environments; Scotch 23 rubber splicing tape and Scotch 33+ super vinyl electrical tape, as manufactured by 3M Products, or equal.

4. Electrical Coating Compound: the electrical coating compound shall be a brush applied material formulated for sealing vinyl tape. The electrical coating compound shall be Scotchkote Electrical Coating as manufactured by the 3M Company, or equal.

5. Shunts: 0.01-ohm shunt**.** Test station shunts shall be constructed to fit the terminal posts for the specified test station. The resistance shall be 0.1-ohm with a current capacity of 2-amperes. The shunt shall be as manufactured by Cott Manufacturing Company Model "Yellow" or equivalent.

6. Earth Fill: native soil free of roots and other organic matter, ashes, cinders, trash, debris, and rocks conforming to the project specification for final backfill.

G. Concrete

1. Materials: poured concrete for the flush-mounted test station slabs shall be ready-mix conforming to ASTM C94. Minimum allowable 28-day compressive field strength shall be 3,000-psi when cured and tested in conformance with ASTM C31 and ASTM C39. Portland cement shall be Type 1.

2. Mixing: in a clean metal container, mix entire package of dry materials by hand or machine. Following manufacturer’s instructions, add clean water in sufficient quantity to produce a slump of 2 to 3 inches.

H. Insulating Joints

1. Flange Insulating Kits:

a. General:

1) Provide standard flange diameter bolt hole sizes.

2) Gaskets: full-face type E, G-10 retainer with a quad ring elastomeric sealing element. Sealing element shall be retained in a groove within retainer portion of gasket.

3) Insulating Sleeves: full-length fiberglass reinforced epoxy (NEMA G-10 grade**)**.

4) Insulating Washers: fiberglass reinforced epoxy (NEMA G-10 grade).

5) Steel Washers: plated, hot-rolled steel, 1/8-inch thick.

a) Provide 2 washers per bolt for flange diameters equal to or less than 36-inch diameter.

b) Provide 4 washers per bolt for flange diameters larger than 36-inch diameter.

6) Manufacturers:

a) Pipeline Seal and Insulator, Inc. (PSI), Houston, TX.

b) Advance Products and Systems, Lafayette, LA.

c) Equivalent approved by HRSD.

b. DIP:

1) Fasteners: in accordance with AWWA C110, for ductile iron pipe. Minimum bolt length shall be the sum of the mating flange maximum thicknesses, sealing gasket, insulating and steel washer thickness, and depth of the nut plus 1/8-inch minimum before torqueing. Since insulating sleeves may not fit over unthreaded portions of fasteners, bolts shall be cut thread full body or threaded rod as required to meet the inside diameter dimensions of the insulating sleeves specified herein.

c. Steel Pipe:

1) Fasteners: in accordance with AWWA C-208-Dimensions for Fabricated Steel Water Pipe Fittings. Minimum bolt length shall be the sum of the mating flange maximum thicknesses, sealing gasket, insulating and steel washer thickness, and depth of the nut plus 1/8-inch minimum before torqueing. Since insulating sleeves may not fit over unthreaded portions of fasteners, bolts shall be cut thread full body or threaded rod as required to meet the inside diameter dimensions of the insulating sleeves specified herein.

2. The insulating corporation valves (stops) shall consist of a brass fitting with a nylon insulator. The insulated corporation ball valve shall be manufactured by Ford Meter Box Company. The corporation valve shall be model FB600 and the insulator adaptor shall be as follows:

a. 3/4-inch service: SI-C04-33-AWT

b. 1-inch service: SI-C04-44-AWT

c. 1-1/2-inch service: SI-C04-66-AWT

d. 2-inch service: SI-C04-77-AWT

3. Insulating Unions: O-ring sealed with molded and bonded insulating bushing to union body. Unions shall be manufactured by Central Plastics Co., Shawnee, OK, or equivalent.

2.2 GALVANIC ANODE CATHODIC PROTECTION SYSTEM

A. Galvanic Anodes

1. Magnesium Anodes:

a. Composition: high potential magnesium, ASTM B843. The composition of the high potential anode shall be as follows:

1) Aluminum 0.010% Maximum

2) Manganese 0.50 to 1.30%

3)	Copper	0.02% Maximum	
4)	Nickel	0.001% Maximum	
5)	Zinc	0.05% Maximum Iron	0.03% Maximum
6)	Silicon	0.05% Maximum	
7)	Other	0.05% each	
8)	Magnesium	Remainder	

b. Open circuit potential and electrochemical capacity:

1) Open Circuit Potential: negative 1.70-volts or more negative to a copper-copper sulfate reference electrode.

2) Electrochemical Capacity: 490-ampere-hours per pound at 50% efficiency, minimum.

3) As determined by laboratory testing using ASTM G97.

c. Dimensions: Ingot dimensions shall be 5.5-inch x 19.875-inch, type 32D5. Final dimensions of the backfill and anode shall be 8-inch x 28-inch.

d. Weight: bare ingot weight shall be 17-pounds. Final weight of the anode and backfill shall be 45-pounds.

2. Wire-to-Anode Connection: manufacturer's standard. Anode connection shall be stronger than the wire. A minimum of 20-feet of #12 AWG solid copper wire with THWN insulation (red) shall be attached to the anode. Wire to anode attachment shall be by silver solder and sealed to prevent any moisture penetration.

B. Backfill

1. Composition:

a.	Ground Hydrated Gypsum	75%
b.	Powdered Wyoming Bentonite	20%
c.	Anhydrous Sodium Sulfate	5%

2. Grain Size: 100% passing through a 20-mesh screen and 50% retained by a 100-mesh screen.

3. Mixture: thoroughly mixed and firmly packaged around galvanic anode within cloth bag by means of adequate vibration.

4. Quantity of backfill shall be sufficient to cover surfaces of anode to a depth of 1-inch.

PART 3. EXECUTION

3.1 GENERAL

A. Construct pipe bonding system, test stations, electrical isolation and galvanic anode cathodic protection system on buried steel, ductile iron and cast iron, and appurtenances.

B. Conform to NFPA 70.

C. CPS shall observe installation of, or inspect following installation, all equipment required by this section. CPS to provide written certification of successful installation.

3.2 BASIC CORROSION MONITORING SYSTEM

A. Pipe Joint Bonding:

1. General:

a. Electrically bond all pipe joints, including vault and manhole piping and fittings, and including restrained joints, except joints specified to be threaded, welded, or insulated.

b. Number of Bonds per Joint:

1) Install 2 joint bond wire assemblies at each joint that requires bonding, as shown on project details.

c. Use thermite weld process for electrical connection of wires to pipe and fittings.

1) When the weld has cooled, remove the weld slag and test the weldment for strength by striking a sharp blow with a 2-pound hammer while pulling firmly on the wire. Re-weld unsound welds and retest weldments. Thoroughly clean mold and mold covers after completion of each weld to assure that no slag will penetrate the next weld.

d. After soundness of the weld has been verified, thoroughly clean with a stiff wire brush and coat.

1) Thermite welds to ductile iron and steel pipe and fittings, steel bonding plates on ductile iron and steel pipe, and steel casings shall be coated with a plastic cap filled with elastomeric material. The elastomeric cap shall extend on all 4 sides beyond the cleaned area. Apply primer over the entire weld area and over the entire area where the elastomeric cap will be placed. Push the dome of the prefabricated cap containing elastomeric material firmly into weld area. Lift the wire away from the pipe and apply the elastomeric material completely around and underneath the wire. Push the wire back down on the pipe. Follow all manufacturers' instructions for installing prefabricated caps. For coated pipe and fittings, repair any and all external coatings that are removed or damaged during the thermite welding.

e. Test each bonded joint for continuity.

f. Bronze wedges are not an acceptable method of achieving electrical continuity.

2. DIP:

   a. Thermite welds to ductile pipe shall be coated with a minimum of 10-mils of a brush-applied mastic. The mastic shall cover the entire area of the weld and the steel bonding plate. The mastic shall be allowed to completely dry before fully embedding within concrete mortar at the pipe joint. Follow all manufacturers' instructions for applying mastic coating.

3. Steel Pipes:

   a. All the bonding cables should be installed at bonding plate on the pipeline.

B. Wire Insulation Repair

   a. Repair splices or damage to wire insulation by spirally wrapping (50% overlay, minimum) with 2 coats of splicing tape and 2 layers of vinyl electrical tape. Make wire splices with suitable sized compression connectors or mechanically secure and solder with rosin cored 50/50 solder. Splices shall be approved by Engineer.

C. Test Station Installation

1. CPS to determine location of test stations based on actual site conditions and as shown on project plans.

2. Attach test wires to pipe via thermite weld connections. Cover with coating material as specified.

3. Test wires connected to foreign-owned pipelines shall be approved in writing by the operator of the pipeline. Wires to foreign-owned pipelines will be attached by pipeline owner. Coordinate this work with owner of foreign pipeline before pipe is excavated.

4. Locate flush mounted test stations to side of street, behind curb.

5. Install all flush mounted test stations in a 12-inch x 12-inch x 3-inch deep reinforced concrete pad in unpaved areas.

6. Locate post mounted test stations as dictated by field conditions and as approved by the Engineer.

7. Reference Electrode Installation:

   a. Place reference electrode within pipeline trench excavation 6-inches from centerline of pipe in a vertical or horizontal position. Install reference electrode within 12-inches of foreign pipelines or as directed by Engineer, between foreign and owner's pipeline.

   b. Backfill reference electrodes with native trench material. Terminate wires in test stations.

   c. Bury test and reference electrode wires a minimum of 36-inches below finished grade.

   d. Make wire connections to test station terminals with crimp-on spade lug terminals, except where solid wire is specified or terminal strips with tubular clamps are used.

8. Wire Labels:

   a. Install on conductors in boxes.

   b. Materials shall be suitable for permanent identification.

c. Plastic, paper, or cloth markers will not be permitted.

d. Position markers in boxes so they do not interfere with operation and maintenance.

e. Each pipe test wire shall include pipe diameter and pipe type, reference electrode, casing, or galvanic anode, as applicable.

D. Concrete

1. Concrete shall be Class B as specified.

2. Reinforcing shall be as specified.

E. Insulated Joints

1. Install insulated joints to electrically isolated pipeline from other structures. Locate insulated joints at connections to existing metallic pipe, where cathodically protected pipe connects to pipe not intended to have cathodic protection, and where shown. Install a 4 wire test station at each buried insulated joint as shown on the project drawings.

2. Align and install insulating joints according to manufacturer's recommendations to avoid damaging insulating materials. Torque all flange isolation kits to the manufacturer recommended torque ratings, careful not to over torque the bolts.

3. Before backfilling, the Contractor shall test each insulator for electrical insulation. If the insulator is not properly isolated, the Contractor shall, at his expense, repair or replace all defective components. The Contractor shall test the repaired insulator. This process will continue until the insulator is tested to be properly isolated. Insulation that passes for effective isolation during the pre-backfill test, but does not render positive isolation results during the acceptance testing must be repaired by the Contractor at no additional cost to the Owner. The Contractor shall provide the Engineer a minimum notice of 5 business days prior to the conducting the testing of the isolation.

F. Insulated Joint Testing:

1. Test each insulation joint after assembly CPS shall monitor the tests. Contractor shall replace damaged or defective insulation parts at no cost to the Owner.

2. Correct defects identified during testing.

3. Provide Engineer with 5 business days' notice before beginning tests.

Acceptance criteria are as follows:

a. High Frequency Isolation Tester: "Acceptable", "Satisfactory" or other similar direct meter reading, <u>and</u>

b. Electrical Potential: static potential difference across insulator of no less than 0.1 volt, <u>and</u>

c. Electrical Potential/Applied Current: a positive potential shift on the side of the insulator where current is applied, and a negative potential shift on the side of the insulator opposite of where current is applied.

3.3 GALVANIC ANODE CATHODIC PROTECTION SYSTEM

Galvanic Anode Installation:

A. Install galvanic anodes at locations as shown on the project drawings.

B. Alternate anode placement on opposite sides of pipe.

C. Provide minimum anode spacing of 2-feet from other unprotected pipelines.

D. Thoroughly compact earth-fill around each anode to a point 1-foot above anode. Stop backfill below grade to allow for placing of topsoil, when required.

E. Bury anode wires a minimum of 24-inches below finish grade.

3.4 FIELD TESTING

A. General:

1. Provide CPS to visit site throughout installation of the basic corrosion monitoring system including, pipe joint bonds, insulating flanges and couplings, test stations, reference electrodes, and other system components. CPS shall be responsible for certifying compliance with these specifications, and for observation and testing services. Certification shall be submitted to the Engineer and Owner for the project record.

2. The CPS shall visit the site during the installation of the galvanic anode system and shall be responsible for certifying compliance with these specifications and the design provided. Certification shall be submitted to the Owner and Engineer as part of the project record.

3. Energizing and Testing: provide Engineer with 5 working-day notices before beginning tests. After installation of the cathodic protection system is complete, the CPS shall connect anodes to pipe in test stations, where applicable, and make sufficient tests to ensure proper installation of cathodic protection system. Upon completion of such tests, the CPS who conducted the tests shall tabulate and report the data recorded. In addition to the field data tabulations. CPS shall include in his report recommendations for system maintenance and monitoring.

4. Electrical Continuity Tests

   a. Provide necessary equipment and materials and make electrical connections to pipe as required to test continuity of bonded joints.

   b. Conduct continuity test on buried joints that are required to be bonded. Test electrical continuity of joint bonds after bonds are installed but before backfilling of pipe.

   c. Have CPS monitor tests of bonded joints.

   d. Test electrical continuity of completed joint bonds using a digital low resistance ohmmeter.

   e. Digital Low Resistance Ohmmeter Method:

      1) Provide the following equipment and materials:

         a) Digital low resistance ohmmeter.

b) 1 set of duplex helical current and potential hand spikes, cable length as required

c) 1 calibration shunt rated at 0.001-ohms, 100-amperes.

5. Test Procedure: measure resistance of joint bonds with low resistance ohmmeter in accordance with manufacturer's written instructions. Use helical hand spikes to contact pipe on each side of joint, without touching thermite weld or bond. Clean contact area to bright metal by filing or grinding and without surface rusting or oxidation. Record measured joint bond resistance on test form described herein. Repair damaged pipe coating.

B. Joint Bond Acceptance:

1. DIP:

a. Joint Bond Resistance: the maximum acceptable span resistance shall be 115% or less of the summation of the following:

1) Number of pipe joints multiplied by the theoretical resistance of a joint bond.

2) Number of pipe segments multiplied by the resistance per pipe segment. Replace joint bonds that exceed the allowable resistance. Retest replacement joint bonds for compliance with bond resistance.

b. Repair any defective joint bonds discovered during energizing and testing. All repairs for defective joint bonds shall be completed at no cost to the Owner.

1) Record Tests of Each Bonded Pipeline.

2) Description and location of pipeline tested.

3) Starting location and direction of test.

4) Date of test.

5) Joint type.

6) Measured joint bond resistance (digital low resistance ohmmeter method only).

C. Insulated Joint Testing:

1. DIP:

a. Test each insulation joint after assembly. CPS shall monitor the tests. Contractor shall replace damaged or defective insulation parts at no cost to the Owner.

b. Correct defects identified during testing.

c. Provide Engineer with 5 business days advance notice before beginning tests.

d. Acceptance criteria are as follows:

1) High frequency isolation tester: "Acceptable", "Satisfactory" or other similar direct meter reading, **<u>and</u>**

2) Electrical potential: Static potential difference across insulator of no less than 0.1 volt, **and**

3) Electrical potential/applied current: A positive potential shift on the side of the insulator where current is applied, and a negative potential shift on the side of the insulator opposite of where current is applied.

D. Test station wiring acceptance criteria shall be as follows:

1. Test wires attached to ductile iron and steel piping and/or portable copper/copper sulfate reference electrode. Adjacent test wires on piping shall also have identical potential values.

2. Test wires attached to concrete piping shall have potentials between -0.20 and -0.50 volts to a portable copper/copper sulfate reference electrode. Adjacent test wires on piping shall also have identical potential values

3. Magnesium anode header cables shall have a potential between -1.55 and -1.65 volts to a portable copper/copper sulfate reference electrode. Both ends of the magnesium anode header cable shall also have identical potential values.

4. Permanent copper/copper sulfate reference electrodes shall have a potential between -0.05 and +0.05 volts to a portable copper/copper sulfate reference electrode.

3.5 AS-BUILT DATA

A. Documentation of the location, class, type, and all additional pertinent asset data shall be integrated into project as-built records submitted to Owner.

3.6 CLEAN-UP

A. The Contractor shall be responsible for clean-up and removal of all debris, extra material, and equipment utilized for installation of the corrosion control/corrosion monitoring system.

END OF SECTION

Section 41 – VDEQ Project Funding

A. Introduction – HRSD has previously and will continue to apply for Virginia Clean Water Revolving Loan Funds (VCWRLF) for qualifying Capital Improvement Projects (CIP). The VCWRLF is a self-perpetuating loan fund which provides a low interest financing option to Virginia cities, towns and wastewater authorities for the upgrade, expansion, extension, replacement, repair, rehabilitation, and/or additions to public wastewater collection and treatment facilities. VCWRLF projects must adhere to specific requirements that HRSD, the FIRMs, and the Contractors are collectively responsible for generating and providing documentation to be in full compliance with VDEQ.

B. Checklists – VDEQ requires the Owner to complete the following checklist for each project being funded by VCWRLF and will be provided by the HRSD Project Manager or Contract Specialist:

1. Categorical Exclusion Checklist: HRSD's Project Manager and/or Engineer
2. Preliminary Engineering Report for Design-Bid-Build / Basis of Design Report for Design-Build: HRSD's Project Manager and/or Engineer
3. Plans and Specifications: HRSD's Contract Specialist
4. Map to Closing: HRSD's Project Manager

C. Attachments – the following referenced guidance documents are attached to this section of the standards.

Attachment A - Initial Meeting Review of VCWRLF Program Requirements & Procedures
Attachment B - Map to Loan Closing and Closeout Wastewater Projects

D. Additional Resources – the following hyperlink is to VDEQ webpage where additional information related to the VCWRLF is posted.

https://www.deq.virginia.gov/water/clean-water-financing

End of Section

Section 41 – VDEQ Project Funding

A. Introduction – HRSD has previously and will continue to apply for Virginia Clean Water Revolving Loan Funds (VCWRLF) for qualifying Capital Improvement Projects (CIP). The VCWRLF is a self-perpetuating loan fund which provides a low interest financing option to Virginia cities, towns and wastewater authorities for the upgrade, expansion, extension, replacement, repair, rehabilitation, and/or additions to public wastewater collection and treatment facilities. VCWRLF projects must adhere to specific requirements that HRSD, the FIRMs, and the Contractors are collectively responsible for generating and providing documentation to be in full compliance with VDEQ.

B. Checklists – VDEQ requires the Owner to complete the following checklist for each project being funded by VCWRLF and will be provided by the HRSD Project Manager or Contract Specialist:

1. Categorical Exclusion Checklist: HRSD's Project Manager and/or Engineer
2. Preliminary Engineering Report for Design-Bid-Build / Basis of Design Report for Design-Build: HRSD's Project Manager and/or Engineer
3. Plans and Specifications: HRSD's Contract Specialist
4. Map to Closing: HRSD's Project Manager

C. Attachments – the following referenced guidance documents are attached to this section of the standards.

Attachment A - Initial Meeting Review of VCWRLF Program Requirements & Procedures
Attachment B - Map to Loan Closing and Closeout Wastewater Projects

D. Additional Resources – the following hyperlink is to VDEQ webpage where additional information related to the VCWRLF is posted.

https://www.deq.virginia.gov/water/clean-water-financing

End of Section

Initial Meeting Review of
VCWRLF Program Requirements & Procedures

General Procedures: The letter you received from DEQ Clean Water Financing and Assistance Program Manager is the Loan Authorization from the agency provided so that you may proceed with your project(s) with the certainty of a funding commitment. DEQ staff will work with you to complete the program requirements so that you may advertise for construction bids. Upon the receipt of construction bid(s) and the development and approval of a final loan budget based on as-bid construction and contractual engineering costs, the loan will be closed and you may begin requesting monthly reimbursements for 100% of the eligible costs incurred.

There are a number of requirements which are applicable to projects funded through the Virginia Clean Water Revolving Loan Fund (VCWRLF) Program. It is the intent of the Department of Environmental Quality (DEQ) to ensure compliance with all of these requirements by our loan recipients through the most expeditious, streamlined, and least burdensome method. However, in order for this goal to be achieved, it is important that loan recipients be fully cognizant of these requirements and that they follow through in meeting these requirements in a thorough and timely manner.

The purpose of this overview is to provide a very brief summary of the program requirements as they relate to our loan recipients so that they are fully aware of them and can act accordingly. This initial meeting is not intended to explain all of the details of meeting these requirements, as that information is provided in the **Procedural Guidelines** on our website. It is imperative that the loan recipient read and become familiar with those Guidelines.

Professional Services Procurement: All goods and services for which the loan recipient will be requesting reimbursement must be procured in accordance with the procedures outlined in the Virginia Public Procurement Act, regardless of population size.

Documentation must be submitted to DEQ as either:

a) A letter stating that the Virginia Public Procurement Act was followed in the procurement
   or
b) Documentation of Evidence of RFP or RFQ advertisement, Evaluation criteria used, Ranking of respondents, Statement detailing final selection, Copy of executed contract.

Preliminary Engineering Report (PER): For wastewater projects, the PER in addition to the evaluation of alternatives shall include both an environmental assessment and a cost effective analysis. This will need to be submitted to DEQ for approval.

Categorical Exclusion or Environmental Assessment: For wastewater projects, an environmental review must be conducted as part of the Preliminary Engineering Report. There are three types of environmental reviews: Categorical Exclusion (CE), Environmental Assessment (EA) and Environmental Impact Statement (EIS). These are based on the potential for significant environmental impacts and will be discussed during the initial meeting. The result of the environmental review will need to be submitted to DEQ for approval.

Plan and Specifications: Final plans and bid ready specifications must be submitted to DEQ for review and approval. The appropriate set of contract inserts must be included in the specifications verbatim. The Bid Advertisement must discuss and highlight the requirements of VCWRLF. A completed plan and specifications checklist, certificate to construct (for wastewater projects), and a cost estimate must be provided with this submittal.

Environmental Permits: All required environmental permits must be in place prior to the initiation of construction. As permits are obtained, please submit copies to DEQ.

Construction Contract Procurement: All goods and services for which the loan recipient will be requesting reimbursement must be procured in accordance with the procedures outlined in the Virginia Public Procurement Act, regardless of population size. Once the loan recipient has completed the bidding process and selected the contractor for the project, they must submit a bid package to DEQ for review. The bid package must contain the following:

a) evidence of bid advertisement

b) the bid tabulation, bid form, and bid bond

c) documentation regarding contractor selection

d) documentation verifying solicitation of MBE/WBE firms and the result

e) signed American Iron and Steel Certification Statement (for wastewater projects)

f) Confirmation of correct Wage Determination (for wastewater projects)

Loan Closing: Once all bid documentation, signed task orders, payment bond and performance bond documentation have been received, a date with VRA will be scheduled to close the loan. An initial disbursement request will be needed to close the loan.

Disbursements: Once the loan has closed, requests for disbursements may be submitted. It is recommended that disbursements requests be submitted at least quarterly, however monthly requests are highly encouraged. With each request for disbursement, please submit any change orders that have been executed, along with a discussion for the eligible items/costs for CWFAP staff review.

Project Schedule: A project schedule is also included in the loan agreement. From the time of the initial meeting through loan close out, a Quarterly Project Status (QPS) Report form should be filled out and emailed to the Project Manager within 15 days of the end of each quarter documenting any schedule changes and providing a project update. This form will be provided. Minutes from regularly scheduled progress meetings may be submitted to the Project Manager in lieu of the QPS reports. The Project Manager should be kept updated on any schedule or cost changes throughout the project.

Site Visits: To gauge progress and compliance with approved plans and specifications, site visits will take place at various times throughout the project construction. The DEQ Project Manager will coordinate these visits with the loan recipient. In addition, the DEQ Project Manager should be invited to the pre-bid meeting, pre-construction meeting, and any routine progress meetings. A copy of the Notice to Proceed should be provided to the DEQ Project Manager.

Women and Minority Business Enterprises (WBE/MBE): The loan recipient must evaluate the low bidder's good faith efforts regarding MBE/WBE solicitation prior to contract award. All MBE/WBE solicitation and recruitment documentation must be submitted to CWFAP along with the bid package. The contract should not be awarded until CWFAP has approved the bid package. The loan recipient shall also obtain copies of the VCWRLF MBE/WBE utilization reporting form identifying the selection of minority and female-owned businesses to be utilized during construction of the facility. The contractor and all subcontractors will report their utilization of MBE/WBE firms to the loan recipient on a quarterly basis during the construction period. The loan recipient must compile these MBE/WBE utilization reports and submit on a quarterly basis to CWFAP.

Davis Bacon (DB) (for wastewater projects only): The contractor and its subcontractors shall comply with provisions of the Davis-Bacon Act and Related Acts. All laborers and mechanics employed by the contractor or subcontractors shall be paid wages at rates not less than those in the applicable wage determination for this construction trade and geographic area are required as part of this contract. The wage determination(s) must be posted at the site of the work in a prominent and accessible place. The contractor will also post the Department of Labor poster "Employee Rights under the Davis-Bacon Act" (www.wagehours.dol.gov). The contractor or subcontractor shall insert in any subcontract the applicable wage rates, and a clause requiring the subcontractor include these clauses in any lower tier subcontract. Any class of laborers or mechanics employed under the contract, which is not listed in the wage determination, shall be classified in conformance with the wage decision if possible. Additional classifications shall be requested from the Department of Labor. Upon issuance of an additional classification, the new wage rate including fringe benefits where appropriate shall be paid to all workers performing the work in that classification.

The loan recipient or agent shall:

a) Verify that contractors and subcontractors include covered employees in fringe benefit plans as provided for in the Department of Labor wage determinations
b) Review contractors and subcontractors use of apprentices and trainees programs
c) Ensure all EEO, OSHA, Wage Determination and Additional Classifications, Davis Bacon, and any other required postings are displayed on each work site
d) Certify compliance with Davis Bacon requirements as part of each reimbursement request.
e) Maintain their records of payrolls, payroll reviews, on-site subcontractors, and compliance actions for at least three years after completion of the work

American Iron and Steel (AIS) (for wastewater projects only): The loan recipient must document that all iron and steel products which are retained as part of their "project" are American Iron and Steel. Production in the US of the iron or steel products requires that all manufacturing processes must take place in the United States, except metallurgical processes involving refinement of steel additives. It is the responsibility of the loan recipient to obtain and keep on file all required AIS certifications. The contractor must submit to the loan recipient an initial certification and a final certification. The prime contractor must certify that all iron and steel products which are retained as part of the project satisfy AIS requirements except those "waivered" by EPA, or those included as "De Minimis" products including those supplied or installed by their subcontractors.

Project Inspections: During construction, the loan recipient must provide for project inspection. Inspections may be carried out by staff of the consulting engineering firm, third party inspection firm, or by qualified internal staff. These inspections will gauge construction progress, quality, and conformance with plans and specifications. Inspections are very valuable in claim resolution, change order negotiation, and ensuring that payments are made for work in place. Inspections should be documented with construction progress reports that can be reviewed by DEQ CWFAP staff during site visits.

Fiscal Sustainability Plan: Provisions for repair, replacement, or capacity expansion of existing wastewater treatment and collection facilities must develop a Fiscal Sustainability Plan (FSP) (Loans for new facilities or upgrades not involving repair, replacement, or capacity expansion are not required to develop an FSP).

Impacted loan recipients must develop and implement an FSP that addresses:

a) an inventory of critical assets that are a part of the treatment works;
b) an evaluation of the condition and performance of inventoried assets or asset groupings;
c) a certification that the recipient has evaluated and will be implementing water and energy conservation efforts as part of the plan; and
d) a plan for maintaining, repairing, and, as necessary, replacing the treatment works including a funding strategy.

The FSP must include all assets (equipment and/or operational components) associated with the loan. After the new FSP is developed or the existing FSP is modified, the loan recipient must submit an FSP Certification to the Project Manager.

Loan Close Out: Reimbursements will be held at 95% of the total loan amount to ensure satisfactory completion of the eligible project. A final site visit will be performed once the Certificate of Substantial Completion is received. At this time, the loan recipient must submit a copy of the final change orders/adjustments (if applicable), final AIS certification, final WBE/MBE quarterly report, and FSP to the Project Manager.

Map to Loan Closing and Closeout

Wastewater Projects

In order to receive a VCWRLF Loan, there are several submittal packages that must be reviewed and approved by DEQ CWFAP staff. These documents allow DEQ to review the project's design, specifications, and develop a final loan budget based on as-bid engineering and construction contractual costs. Upon receipt of all required documents, the loan will be closed and you may begin requesting monthly reimbursements for all *eligible* costs incurred.

Required Submittals

Professional Services Procurement: All professional services that you will be requesting reimbursement for must be procured in accordance with the Virginia Public Procurement Act, regardless of population size. **Please provide the following to the Project Officer:**

- ☐ A letter stating that the Virginia Public Procurement Act was followed in the procurement of engineering professional services for the Virginia Clean Water Revolving Loan Fund project. One of the following individuals must sign the letter: Chief Executive (City or Town Manager or County Administrator) or City, County, or Town Attorney. A template will be provided on the DEQ website.

OR

- ☐ Evidence of RFP/RFQ advertisement
- ☐ Evaluation criteria used
- ☐ Ranking of respondents
- ☐ Statement detailing final selection
- ☐ Copy of executed contract/agreement

Preliminary Engineering Report (PER):

The PER for your project must be reviewed and approved by DEQ The PER must address the requirements for the Preliminary Engineering Proposal (PEP) described in the Sewage Collections and Treatment (SCAT) regulations. The PER must identify and select the most cost-effective solution for the project. All alternatives should include an evaluation of water and energy savings, and the use of green technology. **Please provide the following to the Project Manager:**

- ☐ Copy of the final PER (one hard copy and one electronic copy)

Categorical Exclusion (CE) or Environmental Assessment (EA):

The CE or EA for your project must be reviewed and approved by DEQ. Detailed information for these requirements may be found in Section 7 of the Procedural Guidelines. **Please provide the following to the Project Manager:**

- ☐ A letter requesting a Categorical Exclusion based on a qualifying justification. The exclusion request must include a description of the project, a discussion of how the project meets one or more of the exclusion conditions and support documentation.

OR

- ☐ An Environmental Assessment that must address and consider both the direct and indirect environmental impacts of the selected alternative. Accordingly, both adverse and beneficial impacts need to be identified and considered. Direct impacts are caused by the construction of the treatment works, and indirect impacts are caused by the development made possible by the project. The assessment must also evaluate and discuss the impacts that would result without the project (a take-no-action alternative). The Environmental Assessment, including a project description and site location map, must also be forwarded to all review agencies for review and comment.

Plans and Specifications:

The design and contract documents for your project must be reviewed and approved by DEQ in order for the construction costs to be eligible. It is strongly suggested that this package is submitted and approved by CWFAP staff prior to putting the project out for bid. **Please provide the following to the Project Manager:**

- ☐ Copy of the final design plans (one hard copy and one electronic copy)
- ☐ Specifications to include Loan Contract Inserts and latest Wage Determination
- ☐ Completed DEQ Plans and Specifications checklist
- ☐ Proposed Project Bid Advertisement
- ☐ Cost Estimate
- ☐ All Required Environmental Permits
- ☐ Approved Certificate to Construct

Land Acquisition:

If the loan will include funding for the purchase of land, the price paid for the land must be substantiated. **Please provide one of the following to the Project Officer:**

- ☐ Basic Administrative Report(s)
- ☐ Appraisal(s)

Construction Contract Procurement:

All goods and services for which you will be requesting reimbursement must be procured in accordance with the Virginia Public Procurement Act, regardless of population size. **Please provide the following to the Project Officer:**

- ☐ Evidence of Advertisement
- ☐ Bid Form(s) or Bid Proposal(s) from low bidder
- ☐ Bid Tabulation(s)
- ☐ Bid Bond
- ☐ WBE/MBE Solicitation documentation
- ☐ Initial American Iron and Steel Certification
- ☐ Correct Wage Determination: ten days prior to opening bids, the loan recipient must check the DOL website to ensure their wage determination has not been amended. If it has been amended, the recipient must issue a specification addendum to include the latest wage determination in the specifications.

Loan Closing:

Prior to Loan closing, **please provide the following to the Project Officer:**

- ☐ Signed Professional Services Task Order(s)
- ☐ Awarded/Executed Construction Contract, including payment and performance bonds

Reimbursements:

The VCWRLF program is a reimbursement-based program. Once the loan has been closed, you may begin requesting reimbursements based on invoices that have been received. We recommend that reimbursement requests be submitted at least quarterly; however monthly requests are highly encouraged. **For each request for payment, please provide the following to both the Project Officer and Project Manager:**

- ☐ Requisition for Reimbursement Letter on locality's letterhead
- ☐ Certificate of the Project Engineer
- ☐ Up-to-date Schedule 1
- ☐ Invoices to substantiate requested payments
- ☐ Change Order(s), including discussion of eligible items/costs (if any have been executed)

Project/Loan Close Out:

Reimbursements will be held at ninety-five percent (95%) of the total Loan amount to ensure satisfactory completion of the eligible project. In addition to submittal of the following documents, a final site inspection will be performed by CWFAP staff. **Please provide the following to the Project Manager:**

- ☐ Fiscal Sustainability Plan (FSP). If the cost for work on the FSP is funded by the loan, a copy of the completed FSP document must be submitted to the Project Manager with the certification statement and a completed FSP Checklist. If the cost for work on the FSP is not funded by the loan, only the certification statement should be submitted.
- ☐ Certificate of Substantial Completion
- ☐ Final change order for quantity adjustments, if applicable
- ☐ Final American Iron and Steel Certification
- ☐ Final Quarterly WBE/MBE report